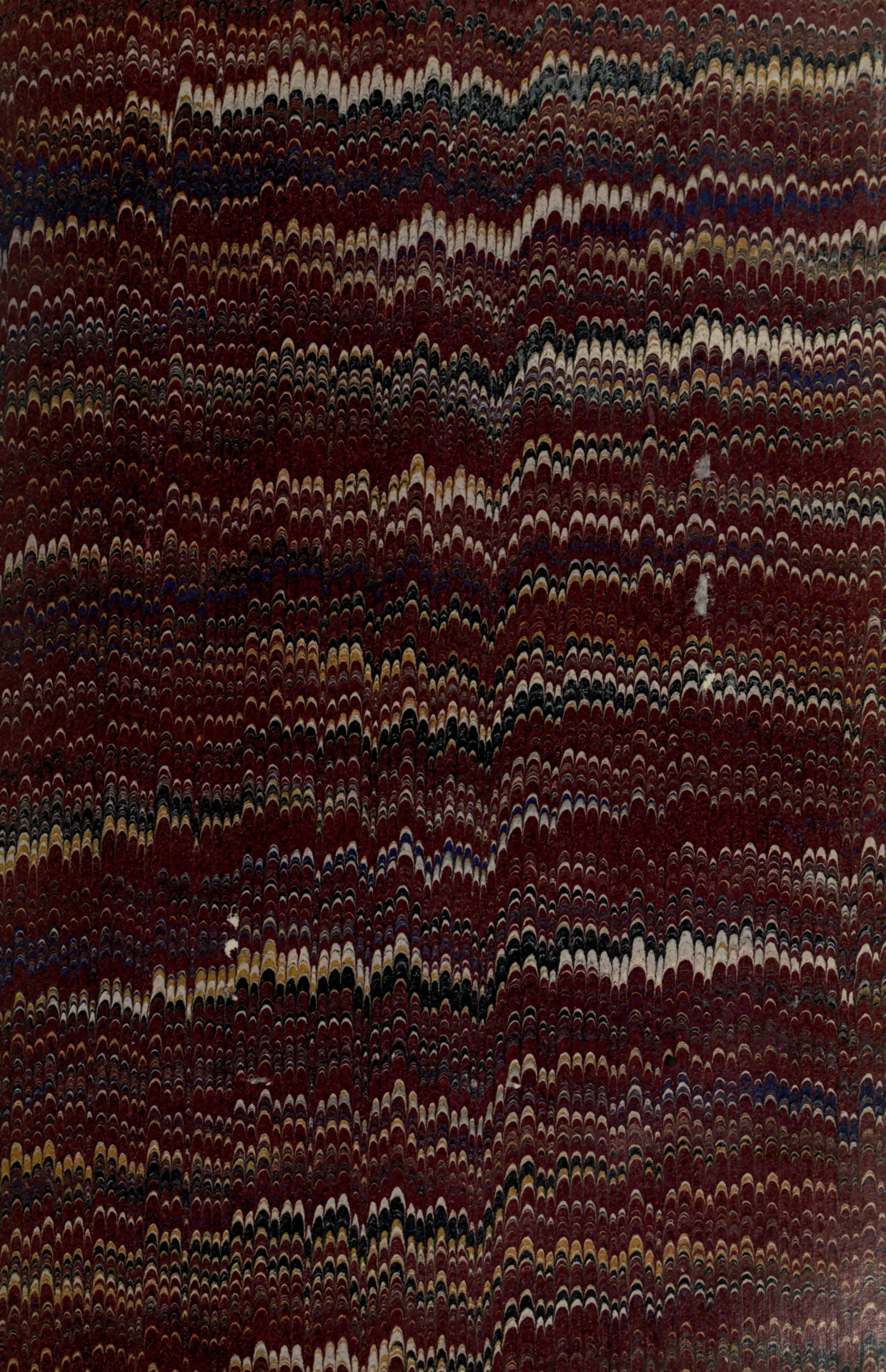

SPONS'

DICTIONARY OF ENGINEERING.

VOLUME II.

SPONS'

DICTIONARY OF ENGINEERING,

Civil, Mechanical, Military, and Naval;

WITH TECHNICAL TERMS

IN FRENCH, GERMAN, ITALIAN, AND SPANISH.

EDITED BY

BYRNE AND SPON.

VOLUME II.

LONDON:
E. & F. N. SPON, 48, CHARING CROSS.
NEW YORK: 446, BROOME STREET.
1874.

LONDON: PRINTED BY WILLIAM CLOWES AND SONS, STAMFORD STREET AND CHARING CROSS.

Girders.—$d = 4{\cdot}2 \sqrt[3]{\frac{l^2}{b}}$, the central interval of girders being assumed to be 10 ft.

Bridging Joists.—The same rule as for common or single joists.

Ceiling Joists.—$d = 0{\cdot}64 \frac{l}{\sqrt[3]{b}}$, the central interval of joists being assumed to be 10 to 12 in.

In this case the formula is the same as that for deflection; hence Tredgold has apparently assumed that the actual amount of deflection should be the same in all ceiling joists.

Wall Plates.— For a 20-ft. bearing .. .. $4\frac{1}{2} \times 3$ in.
„ 30-ft. „ .. .. 6×4 in.
„ 40-ft. „ .. .. $7\frac{1}{2} \times 5$ in.

Floor Coverings.—Almost the only kind of covering used in England for floors of wooden framework is of *boards*. The thickness of floor boards is a practical rather than a theoretical consideration: they are destroyed chiefly by wearing away, and for the economy of replacing them comparatively thin boards and close bearers are better than thick planks and open bearers, as in the deck of a ship. They are seldom thicker than $1\frac{1}{4}$ in.; this is a necessary thickness for barrack-floors which are soon worn away: common house floor boards may be 1 in. and $1\frac{1}{4}$ in. thick. The narrower in breadth the boards are the less danger there will be from shrinking after they are laid; to guard against this, the floors of important rooms are laid with boards, about 6 in. wide, technically called *battens;* more common floors are laid with yellow deal boards, 9 in. wide. It is evidently of great importance that they should be of straight-grained, clean and sound and well-seasoned timber; and to provide for this as far as practicable, they should be brought on the ground and wrought and stacked at the commencement of a new building, and if possible a new floor covering should be laid in its place without being nailed down for at least a year. As a part of the strength and elasticity of the covering depends on the length of the boards, the more completely the ends of them break joint in the several courses of boards the better for this object; therefore, it is advantageous to lay the boards along the room and not across it, as in the former case the joints can be more efficiently broken and the whole floor laid without cutting the timber to waste so much as the latter would require.

The upper face and all the edges of floor boards are wrought, that is, planed to a smooth even surface.

There are four ways practised in laying floor boards, in each of which each board is laid and fastened separately.

1. *Square edged*—That is when the boards are simply laid close together without any connection between two adjacent boards, and are fastened by one or two nails driven straight through the boards into the joists; there is therefore a line of nails over every joist. The longitudinal joints run in straight lines from end to end of the room; the transverse joints, formed by the ends of the boards, are broken as much as possible. In this method the slightest shrinkage of the boards leaves an open joint to the ceiling of the room below.

2. *Rebated.*—That is when a rebate is cut on one longitudinal edge of the boards, and a corresponding but reverse rebate on the other longitudinal edge, the adjacent boards thus overlapping; the nails may be driven obliquely through the rebates of the outer face before the next board is laid, by which no nails will be visible. This is called *edge nailing.*

3. *Rebated and Filleted.*—That is when a similar rebate is cut on each edge, on the under-side, leaving between two boards laid together a square groove below, which is filled with a small piece called a *fillet.* The rebate in this case need be only half the width of that in the last case. From the facility of making this joint and of repairing it, it is generally adopted in barrack-floors. The boards are generally *face nailed*, that is nailed straight through the breadth into the joists, with two nails to each crossing of a joist. But they may be both face and edge nailed, one nail being driven into the face and one into the edge at every crossing of a joist.

4. *Ploughed and Tongued.*—That is a narrow deep groove is cut in each longitudinal edge of each board, and a thin strip of hard wood or of hoop iron is inserted into the outer edge of the first board, and is pressed into the groove of the next board. The boards are generally face nailed. Sometimes dowels or pins with corresponding holes in the edges of the boards are used instead of continuous tongues, and then the boards may be edge nailed.

Warehouse floors require thicker floor covering than ordinary floors, on account of the heavy traffic and liability to shocks; consequently, the bearers or joists may be farther apart. On account of the wear, oak or some hard wood is frequently used for these floors.

French floor coverings are generally of ornamental parqueterie or inlaid woodwork, the climate not requiring the constant use of carpets as in England. The parqueterie is laid on ordinary rough boards on framework, and as a large bearing surface is desirable with this kind of covering to prevent injury to the inlaid work by deflection as much as possible, the joists in French floors are generally broader than in English floors.

Fireproof Floors.—One of the greatest preventatives to the spread of fire in buildings is lime; a wooden floor well cased in mortar on all sides will resist a considerable action of fire; but the difficulty of thoroughly casing timber in mortar and of preventing its decay has checked the application of it to these purposes. The introduction of cast-iron beams was the first step towards thoroughly fireproof floors, for they can be made of such size and shape as to be convenient and effective for the support of brick arches between them. Many floors have been made, and some are still made with cast-iron girders and brick arches between them. The limit to the interval and consequently to the size of the beams or girders is that the brick arch shall be just strong enough to carry itself and any load that may come upon it, and that the total quantity of iron in the floor shall be the least possible. With arches of one ring of common bricks, that is $4\frac{1}{2}$ in. deep, a span

of 6 or 7 ft. is found to be most effective. The use of cast iron admitted the employment of girders of uniform depth, which is advantageous in floors, the requisite strength in the different parts of the length of the girder being obtained by varying the size of the bottom flange.

The exposed ironwork on the under-side of this kind of floor causes a condensation on it from the moisture in the atmosphere of the room below, which not only rusts the iron, but forms lines of droppings on the floor below each girder. A more serious defect is that the exposed ironwork becoming readily heated by fire is very easily cracked by the sudden contraction caused by throwing water on it; the fall of several floors from this last defect led to the more general use of wrought-iron girders.

The facility with which wrought iron can now be rolled into various forms of bars suitable for these constructions has tended to increase the use of them in floors generally. The same advantages of elasticity and strength and favourable arrangement of metal in the cross-section, which rendered the application of wrought iron so efficacious in roofs, tells equally in its application to floors. It is seldom necessary with wrought iron to use more than single joists; sufficient stiffness can generally be obtained by increasing the depth of joist or girder, or by using box-girders. As rolled-iron joists or girders must necessarily be of the same size throughout, there is a waste of metal in them. They are now rolled solid direct from the rolls of all forms of rectangular flanges up to about a foot in total depth. When they are of double flange or I section, they can be used as girders to support the wooden joists of common floors, or as girders to carry brick arches turned between them and resting on the bottom flanges. Another method of using them, which is now commonly adopted for fireproof floors in England is that generally called Fox and Barrett's plan. The iron joists in this method are placed at about 2 ft. apart, and small fillets of wood about 1 in. or 1¼ in. square are laid across between the joists resting on the bottom flanges, and with intervals of ¼ to ½ in. between them: a temporary platform is erected close under the bottom flanges of the joists, and a fine concrete made with good lime is poured in from above, passing through the intervals between the small fillets and forming a key or tongue below. The total thickness of the concrete must depend on the circumstances of each case: sometimes the concrete is filled in up to the level of the top flanges of the iron joists, and small wooden joists are laid in it to carry the floor boards of the room above; sometimes the concrete is laid no thicker than is necessary to resist ordinary fire, and to stop the conduction of sound, for which purposes probably 4 to 6 in. is sufficient, the small wooden joists of the upper floor are in this latter case carried on the upper flanges of the iron joists. To complete the fireproofing on the under-side when the concrete has set, the temporary platform is removed from below and the under-side of the floor is plastered, the projecting tongues of concrete below the wooden fillets forming a key to the plaster, small pieces of wood being fastened to the under-side of the lower flanges of the iron joists to form a key for the plaster over them.

There are several other methods of forming these iron and concrete floors; the general principle of them is all the same. In all the object is to have a thickness of several inches of good cement and to cover the under-side of iron and woodwork with plaster. The coating of plaster underneath both checks the spread of fire and prevents the condensation and oxidation on the ironwork. It is advantageous to have a quick setting lime for the concrete, as the deflection of the framework caused by its weight may affect the efficiency of the floor; when once the lime has set, the concrete adds to the strength and stiffness of the floor by forming a solid block between the joists.

Sometimes it is desirable, either for purposes of traffic or for better security against fire, to cover the floor of the upper room with stone. In these cases the concrete is generally filled up to the top flanges of the iron joists, and a layer of finer concrete or mortar is laid over it, and the stones or tiles are bedded in that.

These descriptions of floors might be advantageously applied to the construction of flat roofs, as they can be increased to a considerable strength and used for spans or bearings up to 30 ft. Above that span it is desirable to introduce another order of bearers, which would generally consist of framed or plate girders of wrought iron. The intervals between the iron joists are sometimes filled up with tiles made expressly for the purpose, both flat and curved; sometimes with thin iron plates. Curved iron plates are recommended by W. Fairbairn, who has written upon these floors, instead of the brick arches between cast-iron girders, the upper side of the plate being filled with concrete. The ends of the iron joists should be laid upon a continuous stone wall-plate extending round the walls; a bearing of from ⁷ to 12 in. on the wall-plate is sufficient for ordinary floors, and it is only necessary to bed the iron joist on some slightly elastic material, such as lead or some resinous compound, to distribute the pressure uniformly; the friction on the bed will be sufficient security against motion. The ends of large girders should be laid on lead plates resting on stone templates, or on cast-iron beds expressly prepared to receive them, and bolted down in such a manner as to allow for expansion and contraction. Very large girders should have one end bedded on iron rollers, as in the case of large roof ribs, to allow for expansion and contraction.

A further advantage of these floors is that pipes or other arrangements for ventilation can be readily provided for in between the iron joists in the course of construction; or, if box-girders are used, they could be employed for the same object.

Maltese Floors.—A good fireproof floor is commonly made, in Malta and other places in that part of the Mediterranean, of the same construction as the flat roofs, before mentioned. Arched ribs of stone are built across the room from wall to wall at about 4 ft. interval, and having a horizontal surface at top; these carry the ceiling stones, which are, consequently, about 4 ft. long, and are 10 or 12 in. wide and 3 in. thick; they are laid close together without mortar; then stone chippings are laid over them for a depth of about 2 in.; then the flooring stones of the room above are laid; these are from 18 to 24 in. square and 3 in. thick, and jointed with fine hydraulic mortar.

It must be remembered that in Malta there are great facilities for obtaining suitable stones for

this work, and that the stone, when dry and scraped and covered with a coat of warm oil, soon becomes hardened and polished.

Pavements.—In ground floors and in yards and other similar parts of buildings, the flooring is frequently of stone, on account of the nature of the traffic. Such floorings, in England, are generally made of large thin square stones, commonly called *flag-stone*. These stones are in size from 2 ft. square upwards, and from 2 to 4 in. thick. They are generally laid on a substratum of a few inches of concrete, having a bedding layer of fine concrete on the top, and jointed with mortar. Where there is wet of any kind to be dealt with, the lime of the concrete and mortar should be hydraulic. Careful attention to these matters in the laying will save unevenness in the wear, and fracture of the stones afterwards. If the floor is intended to carry off water at any time, the stones should be rubbed on the face and tooled on the edges, and laid, of course, to a slope in the required direction. Tooled-faced stones may be used for ordinary dry floors, and quarry-faced stones for exterior pavements.

Thick paving tiles are now frequently used for ground floors; they should be laid on a bed of mortar on a substratum of concrete and jointed with fine mortar. From the small size and softer material of the tiles, they do not generally form so durable or even wearing a floor as flag-stones.

That which is technically termed *paving* in London is what is used for heavy carriage traffic, and is made with small hard stones, about 9 in. square and 3 in. thick, set together on edge; the stones are dressed slightly to a wedge form, and as the roadway is generally laid with a slight curve, they form a rude kind of arch. Where no hard substratum exists, they should be laid on from 6 to 9 in. of concrete; the stones should be set dry, as close as possible, and grouted with coarse liquid mortar. Granite and siliceous stones form the best paving of this description; limestones wear too smooth.

Pavements of Stables.—The requirements in the flooring of a stable are that it should be as level as the necessary drainage will admit of, hard and not too smooth, and impervious to water. Hard-burnt bricks made in a machine so as to be uniform in shape, and chamfered on the upper edge so as to give a rough surface, form perhaps the best flooring for a stable. They should be laid on a few inches of concrete, according to the substratum, and jointed with cement. Granite paving-stones, cut carefully to shape and with an even upper edge, form a good and durable pavement; they should be laid on concrete and jointed with cement.

The pavement of each stall should be laid with a slight slope from each side towards the centre of the stall, where there should be an open drain with a slope to the rear into a longitudinal drain running along the outside of the heel-posts. The best construction for these open drains is to cut a broad shallow channel from 6 in. to 12 in. wide in a solid stone, and lay these stones very carefully to the required slope of the drain. There should be no covered drains inside a military stable.

The *terraza* floors used in Italy at the present day are made in the following manner;—1st coat; a concrete consisting of common lime $\frac{1}{4}$, sand and fine gravel $\frac{3}{4}$, laid 6 in. thick and well beaten with wooden rammers; after two days in that climate, it is sufficiently dry for the next coat.

2nd coat; a *terraza*, consisting of pounded brick or tile $\frac{1}{6}$, common lime $\frac{2}{6}$, sand $\frac{3}{6}$, of the consistency of mortar, laid $1\frac{1}{4}$ in. thick, well beaten with a light flat rammer. After two or three days it is hard enough for the next coat.

3rd coat; a similar *terraza*, but with the grit of broken stones instead of sand in it, laid on like a coat of plaster with a trowel. After this has been laid for one day, a layer of small hard broken stones is pressed into it; these stones should be of some substance that will take a polish, and be of uniform size (they are passed through a gravel screen) of about a walnut; these being afterwards rubbed to a smooth even surface with some smooth hard stone, form a kind of mosaic-work; the stones are frequently selected by colour, and laid in the third coat to a rough pattern. They should be moistened with oil or water till hard set.

The French use these concrete floors both on the ground floor and upper floors: in the latter case on boards and joists. When on the ground floor, it is made with *beton* $0^{m}{\cdot}15$ to $0^{m}{\cdot}20$ thick: when on boards, it is $0^{m}{\cdot}5$ thick, and is made with plaster of Paris.

Asphalte floors are now commonly used in England for light traffic. The asphalte is formed and laid very similarly both for floors and roof coverings; but for floors the mixture is coarser and thicker. When applied to a floor, a foundation of common coarse concrete is laid 3 or 4 in. thick, according to the traffic: on this, when set, a thin layer of fine concrete is laid with a very even surface, and when this is quite dry, the cakes of asphalte are melted, and a layer of it, about $\frac{1}{2}$ in. thick, is poured on with ladles and reduced to an even surface by hand with a small board. The whole area is laid in breadths of about 3 or 4 ft. at a time, each ladleful being enough to cover that breadth of 3 or 4 ft. for a length of about 18 in. The liquid asphalte is kept in its place by strips of wood along the edges; thus there are series of joints or seams all across the area covered, which are parts liable to cracks and leaks; therefore, in floors and roofs where it is a matter of importance to keep out the damp, it is desirable to have two layers of asphalte, the joints of the upper layer occurring over the spaces of the lower layer. For light foot traffic, or for the protection of the asphalte against the sun, coarse sand is sprinkled over it while it is soft; for heavier traffic, it is necessary to mix grit or broken stone with the asphalte before laying it on, and to lay it 1 in. thick and upwards.

It is very necessary that the layer of fine concrete should be quite dry, otherwise the hot asphalte will convert the moisture into steam, and cause blisters on its surface.

The disadvantages of an asphalte floor are, that its general low temperature makes it a cold floor, and by condensing the moisture of the room on it, a damp floor; and that it is liable to crack and become broken in holes, and is difficult and expensive to repair.

Tar Pavement.—This is a mixture of tar, chalk or lime, and broken stones or sand. It is a concrete more or less fine, according to the traffic of the roadway on which it is to be laid, and in

which tar and lime or chalk take the place of the lime and sand of ordinary concrete. It is too soft, especially in hot weather, to be applicable to heavy carriage traffic; but for light carriage traffic and foot traffic it makes a good and tolerably durable road covering. For carriage traffic the stones should be about the size used for macadamizing; they should be coated with or soaked in tar, and then mixed on the road with the tar and lime or chalk. A coating of sand should be strewed over the surface while the tar is soft, and the road should be well rolled. In forming a pathway, a layer of the tar pavement made with small broken stones should be laid down first, and over that a layer made with sand; the surface should be strewed with sand and well rolled.

Weight of Floors.—Tredgold gives the following Table of the weight of ordinary wooden floors:—

	lbs. a square of 100 sq. ft.
Single-joisted, without counter-flooring	1260 to 2000
Double-framed floor, with counter-flooring	2500 „ 4000
Wooden partitions	1480 „ 2000

It is evident that these weights are intended to include the ordinary moving weight which the floor of a common living room would have to support; for it has been ascertained by experiment at Chatham that the weight of soldiers standing in the ranks, armed and accoutred, is about 56 lbs. a square foot, which is as much as the floor of an ordinary living room would be exposed to. The weight of men unarmed and packed as closely together as conveniently practicable, and which is the heaviest moving weight a floor could be subject to, except, perhaps, of some exceptionable carriage, is 110 lbs. a square foot. The weight of corn stacked on a floor in bulk and 10 ft. high, is 500 lbs. a square foot, and that is the heaviest weight the floor of a general storehouse is ever likely to be subject to, for it is assumed that such articles as guns, shot, and heavy gun-carriages and platforms would be placed on the ground floor of a storehouse. Corn, however, is seldom stacked more than 4 ft. high.

Doors, Windows, and Stairs.—The great difference between the principles of the framing of large timbers required in roofs and floors, and the joining of small pieces to form doors and windows, and such like fittings, is that in the former the main object is to direct and resist great strains; in the latter, the main object is to make close-fitting joints and smooth surfaces. This difference between the two systems has caused this trade in England to be divided into two branches—the carpenter proper, and the joiner; the former dealing chiefly with heavy framework and rough timbers, the latter with fine woods in small pieces fitting nicely together. The joiner uses finer kinds of wood, more carefully selected and better seasoned.

In all kinds of joiners' work one of the chief objects is to reduce the framing into narrow pieces of wood, so that the work may not be sensibly affected by the shrinking; for timber in joiners' work, however well selected, is almost certain to contract when exposed to the constant dry warm atmosphere of a living room, and the chief shrinkage is laterally, and not longitudinally. Therefore panels of framing for doors, and the like, should not be more than 15 in. wide and 4 ft. long. Woodwork in joinery is connected together generally by mortices and tenons. The tenons and mortices should be very truly made, or there will be a danger of one of them splitting when the parts are brought together; tenons should be about ¼ the thickness of the timber, and their width should not exceed five times the thickness, otherwise they are liable to bend or warp: therefore, with wide pieces of timber, two tenons and mortices should be made. Sometimes pieces of wood in joinery are *keyed* together with small wedge-shaped pieces of hard wood, as in the curved ribs of small arches. Tredgold recommends screw-bolts in preference. Sometimes pieces are framed together with *dovetailed* joints, as in the sides of boxes: the dovetailed mortice and tenon-joint, which is disadvantageous in large framework, is useful and effective in joinery.

Doors.—The door and the door-frame are two distinct parts of this *house-fitting*. The door-frame consists essentially of four pieces, two vertical pieces, called stanchions or posts, and a top sill or lintel, and a ground sill. For external doors, the posts are generally of solid timber cut with a rebate on the inner faces for the door to shut against; the top sill or lintel is almost always of solid timber, as even if it has no superincumbent weight to carry, which it should not have, the stability of the door depends much on the bonding of the top sill into the wall. The ground sill is generally of hard wood or stone, in order to withstand the wear of the traffic. The framing together of these four pieces is done in the manner of ordinary carpenters' framing, and the timber is generally wrought or planed. It is fixed in the reveal constructed in the wall to keep the wind and rain from passing between the frame and the wall; hence an external door always opens inwards, an arrangement suitable both for convenience and defence. The frame of an internal door may be made in the same manner as that of an external door, and set in a reveal in the wall; but it is usual in ordinary houses to line the whole of the door opening in the wall with wood for the sake of appearance, and the vertical and top pieces of this lining are used as the posts and top sill of the door-frame; hence an internal door-frame is a kind of box, the pieces of which are dovetailed together, and are thick enough to allow of a rebate being cut in them for the door to shut against. As the efficiency of a door-frame depends more on its stiffness than its strength, the scantlings should never be very small; probably 3 × 3 in. is the smallest cross-section that should be given to any solid door-frame; and a barrack solid door-frame should be 4 × 4 in. An internal door should be flush with the wall of the room it leads into, and should open into the room.

The door itself is composed of a frame of four or more pieces, consisting of two vertical, called *styles*, one horizontal at the top and bottom, called the *top rail* and *bottom rail*, and one or more intermediate horizontal pieces, called the *lock rail* and *frieze rails*, and sometimes an intermediate style to reduce the breadth of the panelling. According to the mode of filling in this framework, the door receives its technical name. The rails are framed in between the styles with common

mortices and tenons, driven up tight with little wooden wedges. The intermediate styles are framed in between the rails. The filling in is sometimes of boards or battens nailed against the framework, or let in flush with the framework on one side; this method is generally used with common doors, as for barrack-rooms, and is called a *framed and battened door*. Sometimes the filling in is of thin panels of wood morticed into the frame with a continuous groove all round; this is used with doors of more important rooms, and is called a *framed and panelled door*. It is the strongest description for ordinary purposes. In large battened doors a diagonal brace is sometimes introduced, extending from the upper outer corner to the lower inner corner.

The thickness of the framework determines the strength and weight of the door; 2 inches is sufficient for the framework of barrack-room doors, and $1\frac{1}{2}$ in. for common living-room doors. The width of the framework is more a question of appearance. Tredgold says it is commonly about $\frac{1}{8}$ that of the panel. The lock rail is generally wider than the others.

The mouldings and ornamentation of doors are questions almost entirely of appearance, and not of construction. Sometimes the panelling is flush with the framework on one side, and therefore sunk on the other; sometimes a double panelling is inserted, so as to make them flush on both sides; sometimes the edges of the sunk part are square, and sometimes moulded. That moulded woodwork, which extends round the door-frame or door-opening, and which is commonly called the architrave, is chiefly for effect, its only constructive use being to form a stop or finish to the plastering of the wall, covering its junction with the door-frame.

Panelling.—There are several other fittings in the interior of houses which are made by the joiner, such as skirtings, door and window linings, shutters, wainscotting, and so on. Most of these are constructed of a framework filled in with boards, and therefore the principles of the construction of doors apply to almost all of them. A *skirting* is the kind of plinth or base, generally of wood, which extends round the walls of a room at their junction with the floor; its constructive object is to cover the junction of the floor with the walls, but for the sake of effect is commonly enlarged much beyond the requirements of that purpose. It consists commonly of a wooden board framed to battens fixed to the wood bricks built for this object into the wall. The battens are called *grounds*. They should be carefully fixed, as on them depends the accuracy of the finished work. The boards of the skirting, as in the case of all panel-work, should be so fixed as to allow for expansion and contraction without splitting. Tongueing and grooving is the best method for this object; one side of a skirting board may be fixed, and the other let in with a groove and tongue.

In barrack-rooms a skirting is frequently made with a flat wrought-iron bar fastened to the floor; this would not be sufficient in rooms the walls of which are liable to be injured by the feet of the inhabitants.

Window and door linings and shutters and wainscotting are constructed on the same principle as doors, with framing filled in with panelling. The linings and wainscotting are fixed to grounds, the shutters are hung to the window or door frames. Wainscotting is the term applied to the lining of walls with woodwork, because when it was generally used, before plastering was much adopted, the commoner kind of oak, called wainscot oak, was used for it. *The lining of walls* and other parts of houses may be made with boards laid like those of a floor. The framework, when there is a masonry wall, need consist only of battens fixed to that wall at intervals of about 2 ft. The principles of laying floor boards apply also to lining boards; they should be narrow, and grooved and tongued or filleted, and it is more convenient and economical to lay them horizontally than vertically. With walls composed entirely of wood-framing the vertical posts should be at about 1 ft. apart, in order to prevent as much as possible the warping of the boards; the boards should be of well-seasoned timber, to reduce as far as practicable the inevitable shrinking which takes place in timber exposed to the warm dry air of rooms. The exterior covering of such wooden walls is frequently made of boards; but in order to carry off the rain, it is necessary to lay them horizontally and with a small overlap. This is done either by cutting a kind of rebate in the lower edges of the boards, the shoulder of which fits on to the upper edge of the board below, or by bevelling the inner face of the lower edges, and the outer face of upper edges, so as to avoid a great projection. An overlap of $\frac{3}{4}$ in. is sufficient if the timber is good and properly fixed.

Windows.—There are two ordinary methods of arranging the opening of windows, requiring two kinds of construction.

1st. *The sliding sash*, in which the window slides vertically up and down in its frame, being counterbalanced by two weights, one on each side, moving in boxes made in the frames and connected with the windows by cords passing over pulleys at the top. This is the method commonly used in England, and is the most effective one in climates of much wind and rain. There is a window-frame, just as there is a door-frame, for the windows to work in, and this is made of four pieces, like a door-frame, two side pieces, a top sill, and a bottom sill. The side pieces, instead of being solid, consist of the boxes before mentioned, or *cases* as they are called, made of thin boards, the sides of which project slightly towards the window, forming a kind of groove for the window to slide in. The top and bottom sills are cut with a rebate for the window to shut against, and the bottom sill is *weathered*—that is, sloped on its upper surface, to carry off the rain. The bottom sill is generally of hard wood, on account of its exposure to wet, it rests on the stone sill. The frame is made by the carpenter, and fixed in its place by the mason or bricklayer.

The window, or *sash*, as the joiner calls it, is made like a door, of a frame of four pieces, two styles and two rails: they are put together on the same principles as in a door; the intermediate pieces to hold the panes are called *sash-bars;* the vertical sash-bars extend continuously from top to bottom; the horizontal bars are framed in between them. The bars and frame-pieces are cut with a rebate on the outer sides, forming a shoulder against which the glass is laid; the under-side of the bottom rail is bevelled to fit the weathering of the bottom sill of the window-frame.

When the window is in two separate pieces, or is *hung double*, having an upper and a lower

sash, each piece is hung separately to a pair of counterbalancing weights; the upper sash slides downwards to open, and the lower sash slides upwards, the upper one being placed outside the lower one for this object partly. The *meeting rails* of the two sashes are cut with a bevel on the inner and outer edges respectively, in order that they may fit quite closely when shut.

The size of the panes or intervals of the sash-bars are determined by the most convenient and economical sizes of glass which can be obtained. The pulleys of the counterbalancing weights are generally made of brass, and the weights of lead, and the cords of a small white rope called sash-cord. The only other fastening required is one connecting the two meeting rails together, which should be such that when open it shall not interfere with the movement of the sash; it is partly for convenience of arrangement of this fastening that the upper sash is placed outside the lower one.

2nd. *Casement Windows.*—The second method of opening windows is that generally used on the Continent, of hanging them with hinges to the frame to open like a door. It is very difficult to keep out the weather with this method. The window-frame is in this case solid, and is cut with rebates on the side pieces and sills for the windows to shut against, otherwise the frame is made on the same principles as a door-frame. The window is generally divided in two parts or *leaves* vertically, like a folding door, in order to reduce the breadth of the moving part. Each part is made of a frame of four pieces with sash-bars; but in this case the horizontal bars should extend continuously through, and the vertical bars should be framed in between them. Several different methods have been proposed of forming the rebates and the junction of the two centre styles, with the object of effectually keeping out the rain and wind; the most effective appears to be to make a curved groove in one part, and a corresponding curved tongue or projection on the other, so as to fit close to each other when shut.

Besides the hinges, a fastening similar to a door lock and bolts are required for this window.

Another method of arranging the opening of a window, common in factories, is by swinging it on two horizontal pivots in the side styles, a little above the centre of their height, so that it is opened and shut by means of two lines, one from the top rail and one from the bottom, the upper part opening inwards and the lower part opening outwards. This is, therefore, an advantageous plan for windows out of ordinary reach of hand. The horizontal sash-bars in this window should extend continuously across, and there should be a centre rail to hold the two pivots. It is easier to make this window water-tight than the casement window, because a rebate forming an effective stop can be put in the inner side of the top part and the outer side of the bottom part. It is not applicable to large windows, on account of the strain from the mode of hanging.

The weight and strength of a window depends much on the thickness of the woodwork, as in the case of a door; 1¾ in. is a suitable thickness for an ordinary barrack-window. The sash-bars are generally the same thickness as the frame.

Skylights.—This is the name given to windows formed in the roof of a house, and more or less corresponding to the slope of the roof. The difference between that and the ordinary vertical window is, that being on a slope the framework must be stronger to resist the greater transverse strain, and that the glass must be fixed in such a manner as to allow the rain to run off. Skylights in general are not made to open; when they are required to open, it adds considerably to the difficulty of construction. In order to carry off the rain, all the sash-bars should lie down the slope of the roof, and the glass panes should overlap each other like slates, without any cross-bars. The panes are kept in their places by the friction and putty in the grooves cut for them in the side sash-bars, and by small metal clips suspending the bottom of one pane to the top of the one below it, the bottom panes of all being sustained by nails or clips to the bottom rail. To connect the sides of the skylight together, iron rods or bars are passed through the bars horizontally. The frame of a skylight is fastened to the beams of the roof, and should project 3 or 4 in. above the roof covering. The styles and rails of the skylight itself should project over the frame, and have a deep rebate cut in or a projecting piece fastened on to the outer edge to close over the frame. A lead flashing should be laid round the outside of the frame and under the roof covering on all sides. When the skylight is required to open, the woodwork should be stronger and the rebates or projecting stops deeper, and a strip of lead should be laid round the styles and rails hanging down over the lead flashing on the sides of the frame.

The panes should be so wide that the sash-bars will necessarily require to be of considerable depth to carry their weight, and thus become in fact descriptions of rafters; by which arrangement an additional system of bearers will probably be saved. They should also be of a size that will allow of an economical division of the sheet of glass of the ordinary dimensions of which the particular glass used is made, and not too large to be expensive in renewing.

Dimensions of Doors and Windows.—Doors.—The minimum width for a door of a living room is that through which a man can conveniently pass; that is to say, about 2 ft. There are few internal doors less than 2 ft. 9 in. in width; those of the soldiers' barrack-rooms in Brompton Barracks are 3 ft. 7 in.; they are too large for one man and too small for two, and form very heavy doors. Those of the single officers' quarters are 3 ft. 3 in. wide, and are large and heavy doors. When doors are required to exceed 3 ft. in width, it is better to hang them in two leaves, meeting in the centre, or *folding*, as it is technically termed, in order to reduce the weight of the door. The weight of a door, besides being a question of convenience, is often a cause of injury from the strains caused by it. The exterior doors of the soldiers' houses in Brompton Barracks are 3 ft. 10 in. wide, and *hung folding*. They are sufficiently wide to allow two men to pass, which should be the case with all exterior doors of soldiers' quarters. The minimum height for a door of a living room is 6 ft. 3 in., but barrack-room doors should be 7 ft. high, to allow for the passage of soldiers with their chacos on. Those in Brompton Barracks are 7 ft. 7 in. high. The exterior doors of barracks should be 8 ft. high, to allow soldiers to march in or out with bayonets fixed.

The following extract from Chambers on Decorative Architecture and from Renaud show the dimensions of doors, recommended by those authors on the double grounds of convenience

and beauty of proportion. The dimensions of doors are measured from *out* to *out* of the door itself.

General dimensions for breadth of doors;—

	Minimum. ft.	in.		Maximum. ft.	in.
Internal doors	2	9	.. ..	3	6
External doors	3	6	.. ..	6	0
„ for churches	6	0	.. ..	12	0
Gates	9	0	.. ..	20	0

(From Rickman's 'Gothic Architecture');—

Gothic (decorated) doors, height to crown equal $2\frac{1}{4}$ times the breadth.

(From Renaud, 'Cours d'architecture');—

	Breadth. Below.	Above.	Height.
Doors of the Erecthæum Temple, Athens ..	2·44	2·35	5·21 mètres.
Palazzo Massini (Rome, Peruzzi, 1500) ..	2·170	2·170	4·64 „

The heights of doors vary from 2 to $2\frac{1}{2}$ the breadths.

Windows.—The width of a window between the frame is generally a question of appearance and of the distribution of the light in a room; the maximum limit, as far as construction is concerned, being that which can be conveniently opened.

The following extracts from Chambers and Renaud give the principal considerations, as far as appearance is concerned, for the dimensions of windows.

Dimensions of Windows.—Palladio agrees with Vitruvius that the height between the floor and the ceiling should be divided into $3\frac{1}{2}$ parts, and that the height of the window should be two of those parts and the breadth $1\frac{1}{6}$ part.

Vitruvius says the breadth of windows should be from $\frac{1}{4}$ to $\frac{1}{5}$ the breadth of the room, and the height $2\frac{1}{6}$ times the breadth.

James Morris' rule for window-space;—The total area of light = $\sqrt{\text{cubic content of room}}$.

Chambers' rule;—Breadth of window = $\frac{1}{8}$ (breadth + height of room).

The window-sill should be at such a height from the floor as will enable a person to lean on it. The breadth of the windows in upper stories should be the same as those of the lower stories. The breadth of the interval between windows should be from 1 to 2 times the breadth of windows; the end interval should be at least equal to breadth of window. Palladio says the jambs (or reveals) should be from $\frac{1}{6}$ to $\frac{1}{5}$ breadth of window.

From Renaud;—

	Breadth.	Height.
Windows in the Louvre, Paris, P. Lescot	1·955	4·557 mètres.

From Rickman;—Gothic decorated windows; height to crown equal $2\frac{1}{3}$, $2\frac{1}{4}$, and $2\frac{1}{5}$ times the breadth.

The heights of windows vary from 2 to $2\frac{1}{2}$ times the breadths.

These rules give windows of greater width than is convenient for opening in one piece, but the practice in modern houses is to employ the large widths based no doubt on these rules for the sake of the appearance, notwithstanding the inconvenience. In the casement window the effect of the great width is quite taken off by constructing the window in two leaves or *folding*, thus forming a broad dividing *style* in the centre. The casement window also admits of the opening part being further reduced in size, by placing a rail or *transom*, as it is called, at a convenient height from the bottom, dividing the window into two parts; the upper part being fixed or opening independently of the lower.

It is an important consideration in barracks to make windows of a size convenient for opening, and for construction and repair; and although it is probably more effective to introduce light into a room through as large area as possible, the purposes of ventilation require a distribution of the openings throughout the walls of the room, and the convenience of the men also requires a general distribution of the window-space. Further, it is recommended by the Sanitary Commissioners that windows should extend as nearly as construction admits to the ceiling, for the sake of ventilation. All these considerations taken together are in favour of employing narrower windows than those usual in modern English buildings, and of obtaining the necessary area of light opening, by increasing the height, at the loss of the ordinary proportion between breadth and height recommended by Chambers and Renaud.

In hospitals and places where light and ventilation are of more importance, the necessary area of light opening might be obtained by a row of small windows near the ceiling, thereby allowing the lower ordinary windows to be reduced to the ordinary proportion between breadth and height.

Stairs.—The following are the technical names for the parts of stairs;

Flight is the term for one continued series of steps without any break.

Landing is the level flat between two flights.

Tread is the horizontal surface of a step.

Riser is the vertical part between two steps.

Winders are the winding steps round a curve when there is no landing.

Stone Stairs.—The most simple arrangement for the construction of stairs is to build two parallel walls, to carry the ends of the stones forming the steps, and if the width of the stairs is great, to build intermediate parallel walls underneath the steps to support them. In this case the stones are subject to scarcely any transverse strain if they are properly laid. It frequently happens, however, that the arrangements of the house prevent the employment of two parallel walls; in such cases one end only of the stone step is let into the side wall, leaving the other end unsupported,

excepting that the outer and lower edge rests on the inner and upper edge of the stone below; this, theoretically, gives a support to each stone from bottom to top of the stairs; practically there is a certain amount of transverse strain even when extraordinary care is taken with the laying. To ensure a good bearing of the upper stones on the under, the bearing edges are cut with a bevel, which Renaud recommends should be $\frac{1}{3}$ the height of the step; he also recommends the bearing of the step on the wall to be $0^m \cdot 20$ for ordinary steps. When, on account of the arrangements of the house the steps wind round to change their direction, the theoretical support of each on the step below is still greater, and becomes complete when the steps form a continuous spiral stair round a common centre. In this latter case, the inner ends of the stones are sometimes cut with cylindrical heads, which, resting on each other, form a continuous column from bottom to top. Sometimes the inner edges are cut short of the centre, so that they do not rest vertically over each other, but form a kind of inner spiral, leaving a small well-hole in the centre from top to bottom.

In barracks of more than two stories, the steps of the lower story should be of stone, on account of the greater wear upon them. It is desirable that all stairs in barracks should be of stone in order to be fireproof. The stone should not be a limestone or any stone that will wear to a very smooth surface; such steps, after they become slightly worn, are dangerous for men to descend quickly.

Wooden Stairs.—Stairs may be constructed of wood in the same manner as of stone; but for the sake of economy it is usual to take advantage of the elasticity of the material and construct them as follows:—

Two or more strong beams are fixed at the slope determined on for the stairs, framed into the beams of the floor below and into those of the floor above, or into some beams specially provided if there should be a landing. The sloping beams are called *bearers or strings*. Their upper edges are cut into vertical or horizontal notches to correspond with the risers and treads of the steps; sometimes boards are fixed to the bearers parallel to and projecting above them, and the notches are cut in them instead of in the beams themselves. The steps are formed with boards, a vertical board for the riser and a horizontal board for the tread of each step; these are framed together with a special tongue and groove joint; the tread-board projects over the riser and is finished with a rounded head or *nosing*. The tread-board is also framed with the riser of the step next above it. The treads of barrack-stairs should be made of hard wood, and be at least $1\frac{1}{2}$ in. thick to withstand the wear; the risers should be at least 1 in. thick: with such dimensions the bearers of an ordinary stair may be about 4 ft. apart.

When there is a landing at some intermediate part between two floors, horizontal beams are fixed in the wall, to carry it and the bearers of the stair; these beams are like the joists of a floor, and are covered with boards in the same manner. When there is no flat landing, but the steps wind round a central well-hole to change the direction of the stairs, a horizontal beam to carry each winding step is fixed into the wall, and framed into one or more vertical posts about the well-hole: these posts are not necessarily supported from the floor below. Or sometimes a curved and winding bearer is specially constructed for this part of the stair. The treads of this part are necessarily wider at the outer end than at the inner, according to the degree of winding. When no wall is close enough to be available, the joists of the landing must be supported by vertical posts from the floor below.

Handrails.—A convenient height for the handrail of a stair is about 3 ft. from the surface of the treads. The upper surface of it should be semicircular and about $2\frac{1}{4}$ in. diameter; it should be continuous without break of any kind from top to bottom of the stairs. The *Balusters* which support the handrail are sometimes also intended to fill up the space between it and the stairs, so as to prevent any one falling through. When for the former object only, as is generally the case in barracks, the fewer balusters there are the better, as they are very liable to injury and so cause expense either to the public or the soldier in repair; for this reason it is better to have a few strong posts well framed into and connected by iron straps with the bearers of the stair. In private houses where the balusters are generally required to fill up the space, the ordinary practice is to make them square wooden bars of small size, and to place iron balusters of the same size at intervals to strengthen the whole structure. But in all public buildings, especially in military buildings, it is desirable to use balusters of a much larger size, and more firmly fixed to the stairs, and at just sufficient interval to prevent children falling through.

Dimensions of Stairs.—Treads and Risers.—The proper angle of inclination for a stair, that is, the height of the riser and breadth of the tread, is that which will enable a person to ascend it with the least fatigue. The theoretical rule for determining this originated apparently with the French architect Blondel, and is based on the supposition, that as there is a certain length of pace which is least fatiguing to a man on level ground, there is also a certain interval between the rungs of a vertical ladder which can be ascended with the same ease. Assuming this proposition and assuming the average length of pace and vertical interval of rungs, this equation will then give the breadth of tread for any assumed height of riser in a stair.

$$h = \mathrm{H} - \frac{\mathrm{H}}{\mathrm{P}} p \left\{ \begin{array}{l} \mathrm{H} = \text{horizontal distance of each step.} \\ \mathrm{P} = \text{vertical height which can be ascended with equal ease.} \\ \left.\begin{array}{l} p \\ h \end{array}\right\} = \text{tread and riser required.} \end{array} \right.$$

M. Renaud assumes the length of the pace of an ordinary man on level ground to be $0^m \cdot 64$; and that he can ascend a vertical ladder with equal ease when the steps are $0^m \cdot 32$ apart. Consequently by this rule the breadth of any step *plus* twice its height ought always to be equal to $0^m \cdot 64$. This rule is however not true either theoretically or practically. M. Renaud says that in Paris experience has restricted the height of steps between $0^m \cdot 11$ and $0^m \cdot 19$, which by the preceding rule gives for the breadth $0^m \cdot 42$ and $0^m \cdot 26$. Low steps are not absolutely an advantage, because there

are more of them to rise to a given height. When the total height is considerable the latter dimension is preferable; when it is a stair of one flight only, the former is better. In ordinary dwelling-houses the heights are generally between $0^m \cdot 16$ and $0^m \cdot 17$, and the breadths consequently between $0^m \cdot 32$ and $0^m \cdot 30$.

The above dimensions correspond very nearly with those used in England in ordinary houses. In Brompton Barracks, Chatham, in the soldiers' stairs, the risers are $7\frac{1}{4}$ in. and the treads are $10\frac{1}{2}$ in., which latter is too narrow for a man to descend rapidly with safety; $12\frac{1}{2}$ in. would be better, though it might make the ascent a little more laborious. The breadth of the tread must be measured from nosing to nosing of step, and the height from surface to surface of tread.

Width of Stair.—The minimum width for the stair of an ordinary house is that which will admit of the passage of a man, that is to say about 2 ft. Renaud mentions a spiral stair of which the diameter was $1^m \cdot 20$. The ordinary width for a barrack stair is that which will allow two men armed to pass each other conveniently; the barrack stairs in Brompton Barracks are 4′ 2″ wide, which is not sufficient for two men to pass; 5 ft. would probably be enough. The maximum width for a stair is a question rather of effect than of convenience. The width should be measured inside the balusters.

Size of Flight.—It is not desirable or generally convenient to have a stair between two floors in one continuous flight or even in one straight line with an intermediate landing: considering convenience and effect together it seems desirable to limit the height of one flight to about 7 ft., and to avoid having two flights in one direction.

Lath and Plaster.—The *plaster* used for covering the walls of buildings is a mortar composed of various kinds of limes or cements, and various descriptions of sand, mixed in various proportions and generally with a little hair or some such material to give it a little more elasticity. It is laid on by hand with a trowel in several thicknesses of about $\frac{1}{8}$ to $\frac{1}{4}$ in. each, and either on the bare masonry wall or on a special screen of lathing made for it, to either of which it adheres by entering into and *keying* itself in the joints and openings and by its adhesive quality. With some variations in the materials and mixing, it is used for exterior and interior work and for ceilings. That material which is more properly called *plaster, or plaster of Paris*, namely, the sulphate of lime obtained by burning gypsum is commonly used for mouldings and ornamental work; several cements are now made in England for that same branch of the work.

The constructive advantages in the use of plaster for covering walls and ceilings are chiefly connected with dryness and cleanliness, otherwise the chief object of it is for the effect of a smooth surface and as a preparation for ornamental painting. For the purpose of assisting to keep the interior of the rooms of a house dry, it is advantageous to employ *lathing*, which being detached from the masonry of the walls forms a lining distinct in itself and not liable to the effect of any moisture which may be in the walls, and which would in time destroy the plaster if placed on the walls themselves, or if the plaster should be made with hydraulic lime would tend to separate it from the walls and always keep it damp and cold.

The following extracts from the article on Building, by Hosking, in the Encyclopædia Britannica, and from other sources, explain the ordinary method of forming a lath-and-plaster lining to a wall or ceiling in England;—

Different kinds of Plaster used.—Coarse stuff is composed of a mortar made of equal parts of lime and sand and clean long ox hair; 1 lb. of hair to 3 cub. ft. of mortar is the usual proportion. The hair should be as long as it can be procured and free from grease and dirt, and as finely separated in the mortar as possible. Nothing but clean sharp sand should be used with this lime and hair in the composition of this any more than of building mortar. *Fine stuff* is a mortar made of fine white lime exceedingly well slaked with water, or rather formed into a paste in water to make the slaking complete: for some purposes a small quantity of hair is mixed up with it. Fine stuff very carefully prepared, and so completely macerated as to be held in solution in water, which is allowed to evaporate till it is of sufficient consistence for working, is called *putty*, plasterers' putty. *Gauged stuff* is composed of $\frac{3}{4}$ of this putty and $\frac{1}{4}$ calcined gypsum or plaster of Paris; this must be mixed in small quantities at a time, as the gypsum causes it to set rapidly. *Common stucco* is composed of $\frac{2}{3}$ clean sharp sand and $\frac{1}{3}$ lime. *Bastard stucco* is composed of $\frac{2}{3}$ fine stuff, without hair, and $\frac{1}{3}$ of very fine clean sand.

All kinds of limes and cements may be used for plaster; with respect to the quantity of sand they will bear, see the article on *Lime* and *Mortar*. Where the plastering is intended to hold water, as in a tank, it is evidently necessary that a hydraulic lime should be used.

Lathing.—Before the plasterer begins to lath a ceiling he proves the under face of the joists by the application of a long straight-edge, and brings them all to one horizontal plane. This is done by nailing on strips of wood, and is called firring. If it be a framed floor it is tolerably sure to be straight; when the ceiling joists are fastened to the binding joists of the room above, nothing of this kind is necessary. It is an important point to be attended to in plastering on laths, and in ceilings particularly, that the laths should be attached to as small a surface of timber as possible, because the plaster is borne not so much by its adhesion to the wood, but by the keying of it between and behind the laths. Under a single floor in which the joists are necessarily thick a narrow fillet should be nailed along the middle of the whole length. *Plasterers' laths* are narrow strips of some straight-grained wood (generally fir in England), split with an axe to give roughness of surface, and cut into lengths of 3 or 4 ft., about 1 in. broad, and $\frac{3}{16}$ or $\frac{1}{4}$ in. thick. These are single laths; double laths are $\frac{3}{8}$ in. thick. Lath nails are either wrought, cut, or cast, varying in length to suit the single or double laths: cast nails are commonly used in England. The laths are laid in courses or bays, and these should break joint over the whole surface of the ceiling; the rows of laths are about $\frac{3}{8}$ in. apart, and there is one nail in the centre and one at each end, which latter also secures the ends of the adjacent laths in the same row.

In lathing on walls the bonding of the bays of lathing is not of so much importance, nor is the breadth of the timbers behind the lathing, because the toothing which the thickness of the lath

itself affords to the plaster is sufficient to support it vertically. The laths for walls may be weaker than those for ceilings; weak laths in a ceiling are sure to produce inequalities by sagging to the weight attached to them. When the lathing is on a wall, the timbers to which it is fixed, being supported by the wall, need only be battens of 1½ to 2½ in. thick, which are fixed to wood bricks in the wall, their object being both to support the lathing and to provide a space between the plaster and the wall, so that they shall not come into contact.

Laid and set is the technical term for two coats of plaster on laths. The first coat is a thick coat of *coarse stuff* of a consistency thin enough to pass between the laths and form a key behind, and stiff enough not to fall apart in the operation, a contingency which not unfrequently occurs in practice, in consequence of the workmen using thin mortar in order to avoid the extra labour of working stiff mortar through the latter. It is put on with a trowel, and when sufficiently dry is swept with a birch broom to roughen its surface. The second coat is a thin coat of *fine stuff*, and is put on with a trowel with the assistance of a hog's-bristle brush to keep the surface of the second coat wet while the operation is going on. If the first coat has become very dry it must be wetted, or the second coat in drying will shrink from it.

Plaster, float and set is the term for three coats of plaster on laths. The first or *pricking-up* coat is of coarse stuff put on with a trowel to form a key behind the laths, and about ¼ or ⅜ in. thick on the laths: while it is still moist it is scratched or scored all over with the end of a lath in parallel lines 3 or 4 in. apart, the scorings being made as deep as possible without exposing the laths; the rougher the edges are the better, as the object is to produce a good key for the next coat. When the pricking-up coat is sufficiently dry not to yield to pressure in the slightest degree, the second coat or floating is put on. The floating is of fine stuff with a little hair mixed with it; ledges or margins, 6 or 8 in. wide, and extending across the whole width of a ceiling or height of a wall, are made at the angles and at intervals of about 4 ft. apart throughout: these must be made perfectly in one plane with each other with the help of straight-edges. These ledges are technically called *screeds*. They form gauges for the rest of the work, and when they are a little set the spaces between them are filled up flush, for which a derby float or long straight-edge is used. The screeds on ceilings ought to be levelled, and those on walls plumbed. When the floating is sufficiently set it is swept with a birch broom for the third coat or setting. The third, or setting coat, should be of plasterers' putty if the ceiling or wall is to be whitened or coloured. If it is to be papered, the third coat should be of fine stuff, with a little hair in it. If it is to be painted, the third coat should be of bastard stucco trowelled. Trowelled stucco should also be hand-floated. In this operation the stucco is set with the trowel in the usual manner, and brought to an even surface with that tool to the extent of 2 or 3 yds. The workman then takes the hand-float in his right hand, and rubs it smartly over the surface, pressing it gently to condense the material. As he works the float he sprinkles the surface with water from the brush in his left hand, and eventually produces a texture almost as fine and smooth as that of polished marble.

Plaster of Walls.—The process of plastering on the naked brick or stone wall differs in little except in name from the mode on laths. The first coat is called *rendering*, and differs only from the first coat for laths, in the quantity of hair, which may be less, and in the consistency of the mortar, which may be more plastic, because in a moister state it will attach itself more firmly to the wall: the wall itself should be wetted before the rendering is applied. The second coat is called *setting*, and is the same in every respect as the setting coat on laths. In three-coat work the first, or *rough rendering*, should be made to fill up completely whatever crevices there may be in the work behind it, and be incorporated with it as much as possible. Its surface should be left rough, but it is not scratched or lined as the similar coat on laths is. For the second coat, or floating, screeds must be formed, as before described. The consecutive processes are exactly the same as on laths, both for the floating coat and for the setting coat. In almost every case in which plastering has to be floated, the workman finds a guide for the feet of his wall screeds, in the narrow *grounds* which the joiner has previously fixed for the skirting. From these he plumbs upwards, and makes his work perfectly flush with them.

In plastering a wall with *common stucco* (its use is mostly for outside work), the dust is first removed from it by brushing, and it is then well wetted. If the wall to be stuccoed be an old one, or one of which the joints have been drawn, the mortar of the joints must be chipped, or even raked out, and the bricks picked, to expose a new and porous surface to the plastering before brushing and wetting. The wall is then covered with stucco in a fluid state, applied with a broad and strong hog's-bristle brush, like common whitewashing. When this is nearly dry the stucco must be laid on as in common rendering. When the work is to be floated the process is nearly similar to that in floated plastering. Screeds must be formed at the highest and lowest extremities of the wall, and be returned at the angles, putting the whole surface into a sort of frame; inner screeds must then be made at every 3 or 4 ft. apart over the whole surface, and the interstices filled in as before. As the work is made good it must be well rubbed with the hand-float to compress the material and produce a hard and glossy surface. Preparations for cornices and other projections should be previously made by bricks or tiles projecting from the brick or stone work, forming a core on which the mouldings are run with moulds in stucco. No plaster of Paris should be used for external work, as the wet will dissolve it. When the stucco is dry it may be painted in oil colours, or coloured in distemper.

Rendering in *Roman cement* is executed almost exactly in the same manner as stucco rendering, only it is laid on the saturated wall directly without the preliminary operation of roughing in, or washing the surface with a solution of the material. The same process is also followed in floating this cement, and with the same exceptions. A quick-setting cement like this is far preferable to common lime for mouldings. Roman cement may be painted in oil or coloured. In the latter case the colour should be mixed with dilute sulphuric acid instead of size.

Rough cast is a cheap and useful covering for external walls which are well protected by eaves. The surface is first roughed in or rendered with lime and hair. When that is dry another coat of

the same material is added, laid as evenly as it can without floating; and as soon as a piece of 2 or 3 yards is executed the workman lays on it an almost fluid mixture of fine clean gravel and lime. This is immediately washed with any ochreous colour, and the whole dries in one mass. The lime in rough cast should be a strong lime.

Mouldings and Ornamental Work.—If a moulding which is to be made in plaster does not project beyond the plane of the wall more than 2 in. it will be sufficient to make a foundation for it in lime and hair after the first coat of plaster. If any one part of the moulding should project more than that, a row of nails, 6 in. apart, and driven into the plaster, will be sufficient to support it. But if the general mass of the moulding project more than 2 in. a rough form of it must be made by brackets of wood fixed at intervals, and cut roughly to the outline of the moulding, and covered with laths. The first, or pricking-up coat, must be laid over this form. The second coating of the moulding, if interior work, should be made of *gauged stuff*, and laid as follows:—A *mould*, or piece of board with the section of the moulding cut out of it is made to move along the line of the moulding guided by two battens, one above and one below, fixed temporarily to the wall, and so as to have a space of about ¼ in. between it and the first coat of plaster. One man lays on the gauged stuff in almost a fluid state with an angular trowel; another works the mould backwards and forwards over it until it takes the form of the mould, the superfluous stuff being swept off by the action. If the whole height and projection of a moulding be too large and heavy to be executed at once in this manner, it can be done in parts, one at a time.

This method evidently applies only to plain mouldings of the same continuous section. Enriched mouldings can be commenced in the same manner, and the space for the enrichment can be left vacant in the *mould*, and completed afterwards by hand. The angles formed by two lines of moulding meeting from different directions must also be finished by hand. Such joinings are termed *mitres*, and the workman uses what is called a *joining tool* for them. Such enriched parts of a moulding as cannot be executed in the above manner are generally cast in *plaster of Paris* in moulds. These moulds are made of plaster of Paris or wax or gutta-percha from wooden models of the design. These cast parts of the moulding, when set and trimmed, are fixed in their places in the moulding with plaster of Paris, if there is any projection to support them, or with white lead or iron cement if they have to depend entirely on the cement. Such ornamental castings as are too large to be trusted to cement alone must be fixed with screws to woodwork behind them specially provided for the purpose.

Hosking says the most general cause of the decay of stuccoes and cements on external walls is the impurity of the materials. If the sand is quite clean and the lime good of its kind, and the work be well hand-floated and trowelled, particularly on the upper surfaces of projections, where wet is liable to penetrate, the plastering, with common attention to the painting of it, will last as long as anything of the kind can be expected to last.

In repairing plastering, the surface should first be well washed to remove the dirt. The cracks and fractures are then repaired with new plaster, and when the new work is quite dry the joinings are scraped to produce an even surface, and the whole is re-coloured or whitened once or twice. Stuccoed walls that have been painted must be rubbed with pumice-stone to take off the old paint before they are repainted.

TABLE OF MATERIALS IN PLASTERING REQUIRED TO COVER SUPERFICIAL YARDS AS UNDER.

Materials.	Render 1 coat and set.	Plaster 1 coat and set.	Render 2 coats and set.	Plaster 2 coats and set.	Plaster float and set.
	sq. yds.	sq. yds.	sq. yds.	sq. yds.	sq. yds.
1 cubic yard common chalk lime					
2 „ sand	75	70	65	60	60
9 lbs. hair					
Lathing.					
1 bundle laths					
600 nails	4½ sq. yds.				
Stuccoing.					
1 bushel Roman cement without sand, ¾ in. thick	1½ sq. yd.				

Painting Woodwork.—The useful object of painting materials used in construction is to protect them from the action of such causes of decay as heat, gases, moisture, &c., by covering them with an almost impervious and a very durable coating; but probably the origin of house painting is due to purposes of ornament rather than use. The most effective known composition that combines both objects is a mixture of white lead and linseed oil. The mixture of white lead and oil to a consistency that can be readily used with a brush, when spread on any material sinks into it, and dries in a few days, forming a covering durable under ordinary circumstances, and impervious to ordinary damp. It can be mixed freely with almost all colours, and is sufficiently economical in England to be applicable to houses generally.

The *linseed oil* is the material in this mixture which forms the durable coating. This oil, in common with a few other vegetable oils and with some resinous matters, possesses the property of drying, after it has entered the surface of the material, into a resinous compound, which thus fills up the pores of a material like seasoned wood with a substance similar to the natural resin, and so prevents further decaying action going on. The *dryer*, as it is called, is some oxidizing substance, *such as litharge*, added to expedite the drying process, and a solvent, such as *spirits of turpentine*, is added to dilute the mixture, and which soon evaporates again. The *white lead* gives body and opacity to the mixture. It combines readily, and to a certain extent chemically, with the oil into a creamy compound, drying into a saponaceous substance.

White lead is the carbonate of that metal, obtained in this country from the metallic lead. It is a fine white powder, weighing about 400 lbs. a cubic foot. There are other powders of the same appearance, which, being cheaper, are sometimes used to adulterate the white lead with, such as whiting, sulphate of baryta, Paris white and zinc white. As there are none of these so durable or useful as white lead, it is essential that it should be pure. They can be detected either by the specific gravity or by resolving the powder back into metallic lead, which should weigh $\frac{1}{10}$ less than the powder, or in the case of the sulphate of baryta, which is the most usual adulteration, by nitric acid, which will dissolve the lead but not the baryta. White lead combines more readily and effectively with oil than any other of these pigments.

Linseed oil, in its natural condition, dries slowly to the resinous varnish required for coating materials, and rather injures the brilliancy of delicate colours by its strong amber colour. As the operation of drying is an oxidizing process, the addition of good oxidizing agents expedites the drying of paints. *Boiled linseed oil* also causes it to oxidize quicker; but, as it makes it thicker it is not so suited for in-door or delicate work. Linseed oil can be *clarified* by mixing it with an acid, such as oil of vitriol. It must be well washed with water to get rid of the acid.

Driers.—The ordinary oxidizing agent used is *litharge*, or oxide of lead. *Oxide of manganese* is also used, and is a quicker drier than litharge. These driers generally contain some inert matter, such as chalk or sulphate of baryta, as an agent, as well as the acetate as an oxidizer.

The proportion of litharge generally used is about $\frac{1}{4}$ lb. to a gallon of oil. The oil is then called a *drying oil*, and can be made clear and colourless by leaving it exposed to the air in shallow vessels for two or three days.

Solvents.—Some substances are required to dilute the mixture of white lead and oil, which would not otherwise penetrate into the pores of the material. This solvent should be light and easily evaporated.

Spirits of Turpentine (commonly called *turps*) is generally used for this purpose; it is a solution of resin in spirit, and evaporates perfectly. The best test for its purity is by evaporating it; it deteriorates by keeping. Some natural drying oils could be used as solvents, but they generally contain foreign substances, which will not dry and which cannot be easily got rid of.

Pigments.—The object of adding all pigments to the drying oil is to give it opacity and body and colour.

They should be always of a permanent character, and are almost all mineral. Besides white lead the following are used in house painting.

Patlinson's White is an oxy-chloride of lead, and not a carbonate. It has not so much body as white lead, but it mixes freely and is not readily discoloured.

Sulphate of Baryta has not so much body as white lead, in the adulteration of which it is much used; it is durable, and forms the basis of several *whites* employed by house painters: it is heavier than white lead.

Zinc White is the oxide of zinc. It is cheaper than, but not so durable as, white lead: it is light, and not opaque, and is readily attacked by salts, therefore is not durable and is easily acted on by wet and acids in wood. It does not dissolve so readily as white lead, and therefore requires more oil. For, as long as it lasts, it keeps its colour better than white lead and is not so easily adulterated: it takes longer in drying, and when adulterated is liable to change colour. Lead dryers should not be used with zinc white: sulphate of manganese is the best drier.

Chromes or Yellows.—All consist of oxide of lead and chromic acid: when boiled with lime the mixture is lightened in colour; when boiled with acid it is darkened; when boiled with saltpetre orange colour is formed. Chromes combine well with oils, and are therefore the best of all yellows.

Prussian Blue is made from animal refuse (such as horns, blood, &c.), burnt with potash and iron at a high temperature.

Smalt Blue is oxide of cobalt, and is made by roasting cobalt ore and mixing silica with it, and the fusion of it with sulphur produces blue smalt.

Ultramarine Blue was formerly made from lapis lazuli and was very expensive: it is now made artificially and of better colour by fusing together carbonate of soda, silica, alum, and sulphur, and then washing the compound and fusing it again, and washing it again, and then heating it with sulphur, which gradually colours it.

Greens are almost all obtained from copper. *Verditer* is oxide and carbonate of copper: other greens contain arsenate of copper. They are durable colours.

Brunswick Green is made of Prussian blue and chrome, mixed with carbonate of lime or sulphate of baryta to dilute it. If the chrome has an acid in it the colour fades: therefore, to test it, the powder should be exposed for a fortnight to a strong sunlight.

Red Lead is oxide of lead: on account of its durability it is frequently used as a priming or first coat on ironwork; but care should be taken that no salt is present, otherwise a chemical action commences, blisters are formed, and the lead is reduced to the metallic condition.

Oxide of Iron paints.—These are the most effective and durable paints to use on iron, as they have no tendency to change or affect the surface of the iron. There are several preparations of them. *Grant's Black* is made of shale containing oxide of iron. The *purple brown oxide* is a hydrated

peroxide of iron. The *Torbay paint* is a protoxide of iron. But the most effectual coating that can be used for heavy ironwork, such as thick plates, is the natural surface fresh from the rolls or hammer; wrought iron, after such treatment, has always a coating of magnetic oxide on its surface, which is hard and thoroughly attached to the body of the iron, and which as long as it is left unbroken, will prevent any further action on the iron.

In painting woodwork, the surface must be first prepared by counteracting the effect of anything that may prevent it from becoming identified with the material. Thus, in painting pine-woods of any kind, the resin contained in the knots which appear on the surface must be neutralized, or a blemish will appear over every knot; this is done with two or more coats of red lead ground in water and mixed with size laid over the knots; this is called *killing the knots.* A preparation under the name of patent knotting is also extensively used; it is composed of shellac, naphtha, and perhaps some other drying agent. A single application of the mixture will effectually kill the knots, and as it dries almost instantly it is greatly esteemed by painters as a substitute for the red-lead mixture. All nail-holes (the heads of nails having been punched in) and other defects must be *stopped*, or filled up with putty or wood. The surface of the wood is then rubbed smooth with sand-paper or pumice-stone.

In laying on the paint, the white lead and oil and dryer are mixed to the consistency of thick cream; this is done either on a flat stone by hand or in a mill; the necessary colouring matter is mixed with it. The brush should be held at right angles to the face of the work, so that only the ends of the hairs touch it, for thus the paint is forced into the pores of the wood and distributed equally over the surface. Painting, when properly executed, will not present a shining, smooth, and glossy appearance, as if it formed a film or skin, but will show a fine and regular grain, as if the surface were natural, or had received a mere stain without destroying the texture. Before the paint is applied the wood should be free from moisture of any kind and seasoned, or it will at the least prove useless, and probably injurious. Dampness or moisture or unseasoned substances in woods, stopped in or covered over with paint, will, under ordinary circumstances, tend to their destruction.

New woodwork should have four coats of paint. The first coat, which is called the *priming* coat, need have very little, if any, of the final colouring matter in it. After priming, all nail-holes or other superficial defects are carefully stopped up before the next coat is applied. The remaining coats are laid on as the previous coats become dry, which is generally in about two days. When the painting, after a lapse of four or five years, requires to be renewed, two coats only are usually applied.

For fine work, each coat should be carefully rubbed down with pumice-stone or glass-paper and dusted before the next coat is added.

Painting on Plaster.—Plaster, being more absorbent than wood, requires a greater number of coats to saturate the exterior face, and that the first coat should be thinner. The plaster, being quite dry and hard and well sized with the common thin glue size, the first coat consists of white lead diluted with linseed oil to a thin consistency, with the addition of a small quantity of litharge: the oil is entirely absorbed, thereby hardening the plaster to the depth of about $\frac{1}{8}$ in. The second coat is also thin, in order that the plaster may be thoroughly saturated. The third coat is thicker, and contains a little turpentine, with some of the colouring pigment. The fourth coat is as thick as it can be used, equal parts of oil and turpentine being employed, and sugar of lead as the dryer. A finishing coat is frequently added of pure white lead diluted with spirits of turpentine only. A small quantity of japanner's gold-size is sometimes used as the dryer, and the proper pigment to give the required colour is added; this coat, from its drying without any gloss, is called the *flatting coat.*

The *flatting coat* is also sometimes put on woodwork.

Distemper is the name given to paint composed of white lead and other colouring matters ground in water instead of oil and mixed with size to make it set; it is, in fact, a *water-colour.* It can be used in the same manner as oil colour, but will not stand exposure to rain as the latter will. Sometimes whiting is used instead of white lead.

Whiting.—This material is pure chalk, reduced by levigation to a fine powder. When mixed with size in water it is used to cover plastered ceilings and walls of common rooms, and sometimes for external work of common buildings. The proportions recommended by Vanherman are 12 lbs. of whiting to 2 quarts of double size, the whiting to be covered with cold water for six hours and then mixed with the size and left in a cold place till it becomes like jelly in appearance, and then, but not till then, it is fit for use. The colouring matter should be first ground in water and then added to the whiting before the size is put in. About 1 lb. of this composition will cover 6 yards.

Size is the glue extracted from animal tissue: it is used by itself as a priming coat sometimes, and sometimes as a varnish.

Anti-corrosive paint, as it is called, is made of equal parts by weight of whiting and white lead with half the quantity of fine sand, gravel, or road-dust, and a sufficient quantity of colouring matter. This mixture is made in water and can be used as a water-colour; but it is more durable to dry it in cakes or powder after mixing, and then use it as an oil-paint by grinding it again in linseed oil. The preparation of oil recommended for this purpose is 12 parts by weight of linseed oil, 1 part of boiled linseed oil, and 3 parts of sulphate of lime, well mixed. One gallon of this prepared oil is used to 7 lbs. of the powder manufactured as above mentioned.

Painting old Work.—If the work is much soiled it should be washed with soap and water and scoured; if foul with smoke and grease, it should be washed with lime and water. It should be then rubbed with pumice-stone; then the first coat of the new colour (corresponding to the second of new work) may be laid on; when it is dry, the *stopping* should be done, and the whole rubbed with glass-paper.

To remove old paint from painted work, a solution composed of the following ingredients is used,

namely:—soft soap ½, potash 1, and quick-lime ½ or ¼. The soap and potash are first dissolved by boiling in water: the lime is then added, and the whole applied, while hot, with a brush, care being taken that all portions of paint to be removed are covered with the solution, which must be left on from twelve to twenty-four hours, after which the whole of the painting (no matter how many coats) will easily be removed by washing with hot water. Paint may also be removed by burning, but this is not to be recommended except for very plain and common work.

White Copal Varnish.—4 oz. of copal, ½ oz. of camphor, 3 oz. of white drying oil, 2 oz. of essential oil of turpentine. Reduce the copal to powder, mix the camphor and drying oil, then heat it on a slow fire and add the oil of turpentine and strain it.

Mastic Varnish.—A quarter of a pound of mastic melted over a slow fire with a pint of essential oil of turpentine, and strained.

Common Colours, in house painting, are considered to include lampblack, red lead, and the common ochres. *Superior colours* include blues, greens, rich reds, pinks, and yellows. White is a common colour, except when flatted.

Whitewash.—This is the name given to a mixture of common lime and water, which is frequently used for coating the interior walls and ceilings of barracks and such buildings. It is mixed to a thin consistency, and laid on with a large flat brush. It does not last long, and rubs off to the touch and will not stand rain; but being cheap and easily applied and healthy, it is a very useful preparation for the purpose. It will not adhere to very smooth surfaces, such as wrought timber, paint, &c.

Silicate of Soda.—A solution of silicate of soda has been found by Abel, when applied like paint to wood, to give it a very considerable protection against fire, as well as to form a hard coating durable for several years; it can be used with the ordinary colours like distemper.

Directions for covering Timber with a Coating of the Silicate of Soda and Lime as a Protective from Fire.—Materials employed.—The silicate of soda must be in the form of a thick syrup of a known degree of concentration, and is diluted with water when required for use, according to the prescriptions given below.

The lime-wash should be made by slaking some good fat lime, rubbing it down with water until perfectly smooth, and diluting it to the consistency of thick cream. It may be coloured by admixture with mineral blacks, ochres, &c.

Treatment of the Wood.—The protective coating is produced by painting the wood, firstly with a dilute solution of silicate of soda; secondly, with a lime-wash; and lastly, with a somewhat stronger solution of the silicate.

The surface of the wood should be moderately smooth, and any covering of paper, paint, or other material, should be first removed entirely, by planing or scraping.

A solution of the silicate, in the proportion of one part by measure of the syrup to four parts of water, is prepared in a tub, pail, or earthen vessel by stirring the measured proportion of the silicate, first with a very small quantity of the necessary water until a complete mixture is produced, and then adding the remainder of the water, in successive quantities, until a perfect mixture in the requisite proportions is obtained.

The wood is then washed over with this liquid, by means of an ordinary whitewash brush, the latter being passed two or three times over the surface, so that the wood may absorb as much of the solution as possible. When this first coating is nearly dry, the wood is painted with the lime-wash in the usual manner.

A solution of the silicate, in the proportion of one part by measure of the syrup to two parts of water, is then made as above described, and a sufficient time having been allowed to elapse for the wood to become moderately dry, this liquid is applied, upon the lime, in the manner directed for the first coating. The preparation of the wood is then complete. If the lime coating has been applied rather too thickly, the surface of the wood may be found, when quite dry after the third coating, to give off a little lime when rubbed with the hand. In that case, it should be once more coated over with a solution of the silicate of the first-named strength.

Table of Materials in Painting required to cover Superficial Yards as under.

1st coat	10 lbs. white lead 4 pints linseed oil 2 oz. litharge 1 oz. red lead	25 superficial yards.
2nd coat	10 lbs. white lead 2½ pints linseed oil 1½ pint spirits of turpentine 2 oz. litharge	40 superficial yards.
3rd and subsequent coats	10 lbs. white lead 2 pints linseed oil 2 pints spirits of turpentine 2 oz. litharge	50 superficial yards.

For coloured paints, the last two coats have the colour added to the composition in the proportion of 1 lb. to 2 lbs. for every 10 yds. of surface to be painted; and the quantity of white lead is reduced in proportion.

Glazing.—There are three kinds of glass used in England for glazing windows:—1st, *crown glass;* 2nd, *sheet glass;* 3rd, *plate glass.*

The constituents of the three kinds are nearly the same, but the latter, from its mode of manufacture, is made in larger and thicker plates, and is much more perfect and expensive.

Crown glass is made in circular discs blown by hand; they are about 4 ft. diameter, and the

glass averages about $\frac{1}{15}$ in. thick. Owing to the mode of manufacture there is a thick boss in the centre, and the glass is throughout more or less striated in concentric rings, and frequently curved in surface, and thicker at the circumference of the disc. Consequently in cutting rectangular panes out of a disc there is a considerable loss, or at least variety in quality: one disc will yield about 10 sq. ft. of good window glass, and the largest pane that can be cut from an ordinary disc is about 34 × 22 in. The qualities are classified into *seconds*, *thirds*, and *fourths*.

Sheet glass is also blown by hand, but into hollow cylinders about 4 ft. long and 10 in. diameter, which are cut off and cut open longitudinally while hot, and therefore fall into flat sheets. A more perfect window glass can be made by this process, and thicker, and capable of yielding larger panes with less waste. Ordinary sheet glass will cut to a pane of 40 × 30 in., and some to 50 × 36 in. It can be made in thicknesses from $\frac{1}{20}$ in. to $\frac{1}{4}$ in.

Plate glass is cast on a flat table and rolled into a sheet of given size and thickness by a massive metal roller. In this form, when cool, it is *rough plate*. *Ribbed plate* is made by using a roller with grooves on its surface. Rough and ribbed plate are frequently made of commoner and coarser materials than polished plate, being intended for use in factories and warehouses. *Polished plate* is rough plate composed of good material and afterwards polished on both sides, which is done by rubbing two plates together with emery and other powders between them. Plate glass can be obtained of almost any thickness from $\frac{1}{8}$ in. up to 1 in. thick, and of any size up to about 12 × 6 ft.

In the glazing of a window the sizes of the panes, that is to say, the intervals of the sash-bars, should be arranged, if practicable, to suit the sizes of panes of glass which can conveniently be obtained, so as to avoid waste in cutting; this consideration is of more consequence in using crown and sheet glass than with plate glass. But in barracks, where the soldier has to pay for broken glass, the panes should never be large nor of expensive glass. The woodwork of the sash should receive its priming coat before glazing, the other coats should be put on afterwards. With crown glass, which is sometimes curved, it is usual to place the panes with the convexity outwards. When the glazier has fitted the pane to the opening with his diamond, the rebate of the sash-bar facing the outside of the window, he spreads a thin layer of putty on the face of the rebate and then presses the glass against it into its place, and holding it there, spreads a layer of putty all round the side of the rebate, covering the edge of the glass nearly as far as the face of the rebate extends on the inner side of the glass, and bevelling off the putty to the outer edge of the rebate. The putty is then sufficient to hold the pane in its place, and hardens in a few days.

The glass should not touch the sash-bar in any part, on account of the danger of its being cracked from any unusual pressure, there should be a layer of putty all round the edges. This precaution is especially necessary in glazing windows with iron or stone mullions or bars.

Putty.—Glaziers' putty is made of whiting and oil. The whiting should be in the form of a very dry fine powder; it should be specially dried for the purpose, and passed through a sieve of forty-five holes to the inch, and then mixed with as much raw linseed oil as will form it into a stiff paste; this, after being well kneaded, should be left for twelve hours, and worked up in small pieces till quite smooth. It should be kept in a glazed pan and covered with a wet cloth. If putty becomes hard and dry, it can be restored by heating it and working it up again while hot. For special purposes white lead is sometimes mixed with the whiting, or the putty is made of white lead and litharge entirely.

Paperhanging.—Decorative paper for covering the walls of rooms is manufactured in *pieces*, which are 12 yds. long and 20 in. wide.

The walls of rooms which are to be finished in a superior manner are generally plastered three coats, and upon the plaster when quite dry a coating of what is called *lining paper* should be laid to ensure a smooth surface. The decorative paper is laid on this. The *paste* used by paperhangers is made of flour and water and a little size or glue; alum also is added to paste to make it flow or spread more freely without losing any of its tenacity or sticking quality. Sometimes a common thin canvas is used instead of lining paper, and sometimes instead of plaster, in which latter case battens should be fixed against the walls to fasten the canvas to and prevent it from touching the walls. Canvas is an unsatisfactory substitute for plaster, in consequence of its expanding and contracting according to the hygrometric state of the atmosphere.

In renewing old paper, if the old paper merely requires cleaning, it can be done by first brushing it well, then rubbing it with stale bread crumbs, and then with a dry linen cloth. If the old paper cannot be cleaned it should be taken down and a coating of size laid on the walls, preparatory to a coat of paper: or a coat of size may be laid on the old paper, and a coating of whiting and size or distemper over that. See BOND.

COOLER. FR., *Bac, Bac-refroidissoir;* GER., *Kühlschiff, Kühlstock.*

Wort-coolers and Refrigerators.—After being drawn from the hop-back, the wort has to be cooled down to the temperature at which it is to be pitched or placed in the fermenting tun. This temperature varies somewhat in different cases; but it may be taken as averaging from 54° to 64°, and therefore, allowing for some loss of heat in passing through the hop-back, traversing-pipes, and so on, the temperature of the wort has to be reduced about 150°. This reduction of temperature is effected sometimes by exposing the wort to the air in shallow vessels or coolers; sometimes by passing it through a refrigerator, or apparatus in which water is used as a cooling agent.

Coolers are shallow vessels, generally about 6 in. or 8 in. deep, made of wood, iron, or copper. Wooden coolers are most frequently met with, probably on account of their cheapness, but they are open to many objections. They are usually made of Dantzic deals about $1\frac{1}{4}$ in. thick, the boards being pegged to the joint-pieces with wooden pins. The coolers should be laid with a slight inclination towards the point at which the wort is drawn off, and the boards forming them should be planed as smooth as possible, so that they may be more readily kept clean. Too much care cannot be paid to the cleanliness of coolers, and to ensure it they should be frequently washed with lime water. If the coolers are not in almost continual use, it is advisable to keep them covered with water in the intervals when they are not required, as the pores of the wood which

have been opened by the action of the hot wort are thus to a great extent prevented from absorbing air, which would, when the next gyle was poured on, come in contact with the wort, and be apt to cause a creaming of the surface, or incipient fermentation, generally called the fox. Wooden coolers, also, if allowed to get dry between the times of the wort being poured on, cause a considerable loss by absorption.

To avoid the objections to those of wood, coolers are made of iron or of copper. Coolers are placed so that their under sides are exposed to the air as well as their upper sides, and the cooling effect is thus increased. This arrangement should be adopted in all metal coolers

At Truman's there are two very fine copper coolers, which have been put up under the direction of King, the engineer to the brewery. These coolers are each 110 ft. long by 25 ft. wide, their weight the square foot being about 3½ lbs., and they are supported on joists, the under-sides being freely exposed to the cooling influence of the air. The wort is not allowed to rest on these coolers, but is run over them in a thin stream to one of Morton's refrigerators, which completes the cooling process. These coolers are capable, under ordinary circumstances, of cooling about fifty barrels of wort an hour from boiling-point to a temperature of 110°; and as the combined surface of the coolers is 5500 sq. ft., this corresponds to work $= \frac{(212 - 110) \times 50 \times 360}{5500} = \frac{102 \times 50 \times 360}{5500}$ $= 333{\cdot}8$, or—allowing for the wort being rather below boiling-point when delivered on to the coolers—say about 300 pound-degrees a square foot of surface the hour. This is a very high result, and is partly due to the wort being kept in motion over the coolers, and being thus kept in a state of circulation; and partly to the fact of the coolers being made of thin copper, thus rendering the bottom cooling-surface very effective.

Figs. 2092 to 2094 represent the standard form of refrigerator made by Morton and Wilson. The wort enters at *a*, passes over and under the tubes *b b*, in the direction of the arrows, and finally passes out at *c*.

2092.

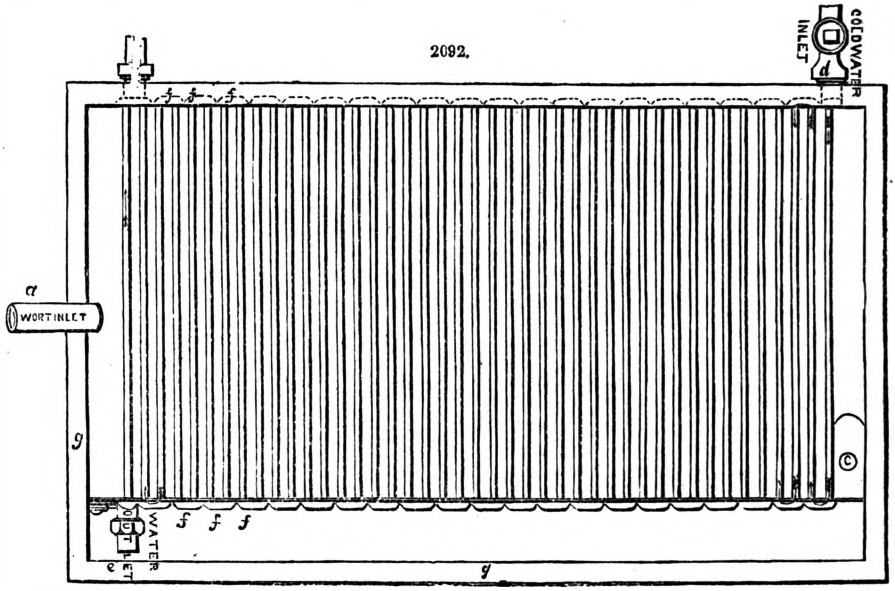

2093.

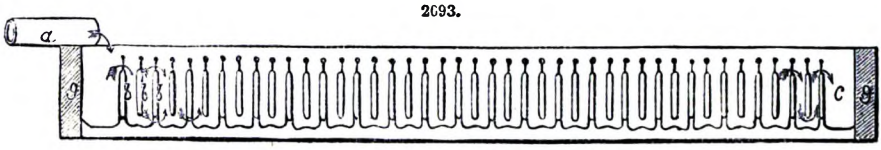

2094.

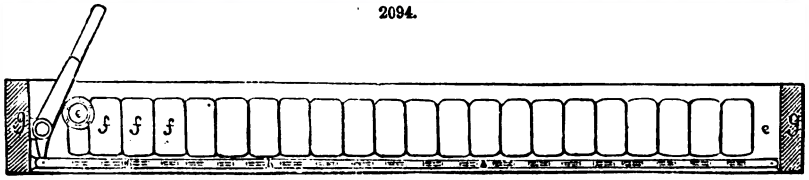

The cold water is admitted at *d*, passes through the tubes in the direction of the arrows across the current of the wort, and escapes at the opposite end by the pipes shown at the top on the left-hand side of Fig. 2092. Caps, *f f*, connect the tubes together at their alternate ends, by which means a continuous passage is formed from end to end. These caps may be hinged to the ends of the tubes, so that they can be readily removed for cleaning the inside of the latter: but this is only necessary where the water is impure, and tends to leave a deposit inside. The tubes are

formed of four separate pieces for strength, these pieces being united, so as to form apparently a single flat tube. The tubular surfaces and casing are formed of copper surrounded by a wooden frame *g*; the caps are of gun-metal tinned. The spaces between the tubes are drained from the worts remaining after the brew by means of the continuous valve arrangement *h*, which is opened and shut by the lever *i*.

Figs. 2095 to 2097 exhibit further improvements. In these figures *a* is the casing to which is attached the tubes *b b b*, each of which is a flattened tube formed by the union of three round

2095.

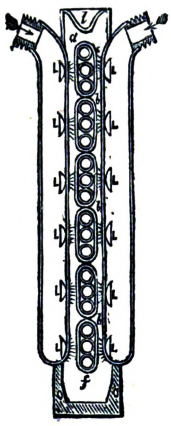

2096.

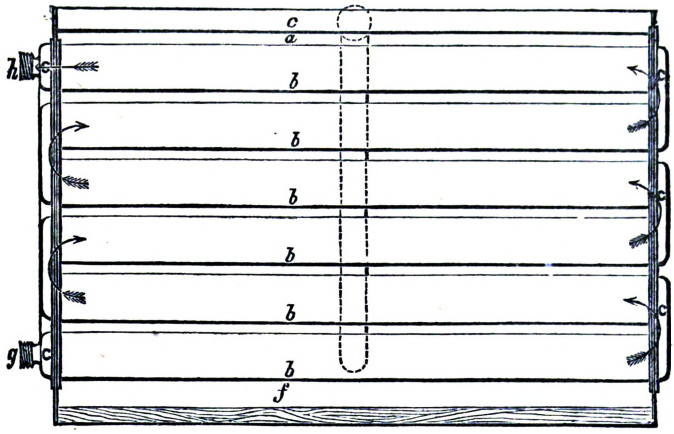

2097.

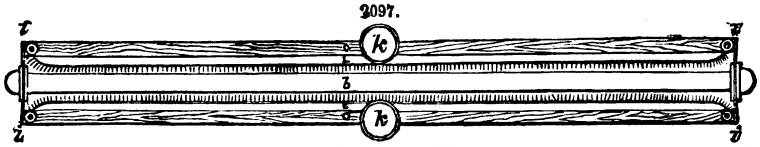

tubes, the spaces between the circles being filled up. These tubes are connected at their alternate ends by the caps *c c c*. The wort is distributed on the external surfaces of the tubes *b b b*, from the trough *e*, placed immediately above, and the bottom of which is perforated, or covered with metallic cloth. The worts percolate through the bottom of the trough, and, falling upon the upper tube, flow round it and descend to the second, and, in the same manner, fall from tube to tube until they are received by the trough *f*. The water enters at *g*, and passes in the direction of the arrows from tube to tube, finally escaping at *h*. The whole tubular surface is surrounded by an outer casing *o*, hinged at *i i*, and secured at *j j*. Vertical air tubes *k k* are attached to this outer casing, these tubes having horizontal air tubes *l l l*, extending from them on each side. The latter air tubes are perforated, and currents of attemperated air are driven into *k k* by a fan or other arrangement, and diffused throughout the casing which encloses the tubular cooling-surface.

The refrigerator, Figs. 2098 to 2100, constructed by Pontifex and Wood, is very complete. Like Morton, Pontifex and Wood employ flat tubes, traversed by the water; but instead of passing the wort alternately under and over them, they cause it to follow the course shown by the arrows marked on the plan of the apparatus. It will be seen from Fig. 2098 that each end of the casing

2098.

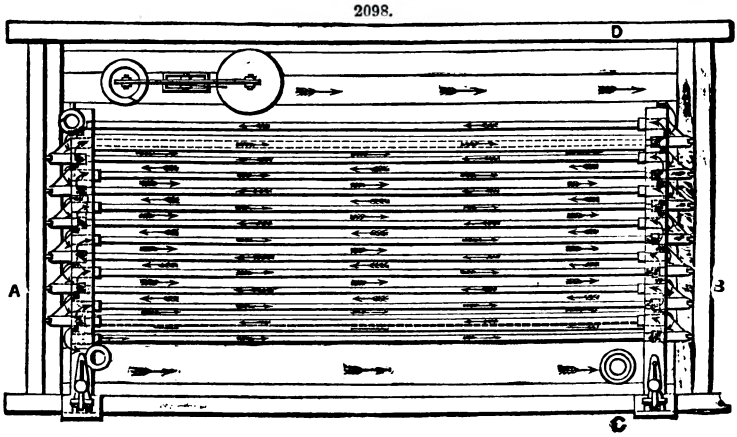

or the refrigerator is touched by the alternate tubes only, so that a zigzag channel is formed for the passage of the wort. The tubes are, as we have said, traversed by the water; and one of the

main peculiarities in the refrigerator is the manner in which the tubes are connected together so as to form a continuous channel. The required connection is effected at their alternate ends by castings, which form water bridges, beneath which the wort can pass The form of these bridges, or connecting castings, is shown in Figs. 2099, 2100. The stream of water flows in the opposite direction to that of the wort, and the course of the current is shown in Fig. 2098 by arrows. The casing of the refrigerator is of wood, and its ends are made to slope slightly inwards towards the bottom, so that a tight joint can be readily made between them and the ends of the tubes. These ends are formed by brass castings, each of which carries a piece of india-rubber projecting from a groove formed in it, this india-rubber bearing against the end of the casing and making the joint tight. The tubes are all fastened on their upper sides to a frame of wood which is hinged to the side of the trough or casing, so that they can be readily raised for cleansing. Each tube is, like those employed by Morton, formed of three or four separate tubes or pieces joined together so as to present the appearance of a single flat tube. This plan is resorted to in order to prevent the tubes from bulging in the event of their being supplied with water under pressure.

2099.

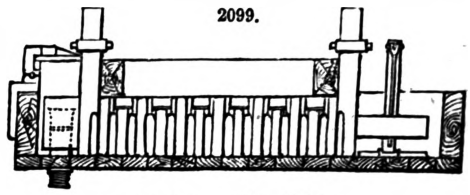

Section on line C D.

2100.

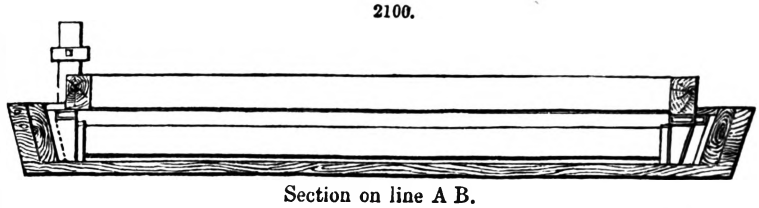

Section on line A B.

Another form of refrigerator is that which we illustrate, Figs. 2101 to 2104. This refrigerator was designed by Joseph Stirk, the engineer of Messrs. Allsopp's Brewery at Burton-on-Trent, and Bycroft, of Burton. In this apparatus, the flat pipes employed are arranged somewhat as in Pontifex and Wood's refrigerator; but instead of their being connected by water bridges, so as to form a continuous series, each pipe is independent of the others. It will be seen by the transverse section, Fig. 2104, that each pipe is so divided by partitions that the current of water is made to traverse its length four times. The pipes do not extend across the entire width of the apparatus, but are fixed to the opposite sides of the casing alternately, so as to leave a passage which is traversed by the wort in the same manner as in Pontifex and Wood's refrigerator. The water is supplied to, and led from, the flat tubes by pipes which extend along each side of the refrigerator, these pipes being connected with the flat tubes by branches furnished with cocks, as shown in Figs. 2103, 2104. The object of this arrangement is to enable any one of the flat tubes to be removed for cleaning or repairs without interfering with the action of the refrigerator. It will be seen from the arrows on Fig. 2104 that the water is supplied by the lower pipe on each side to the lowest compartment of each flat tube, and after traversing the length of the latter four times, it escapes into the upper pipe. This refrigerator from its construction affords great facilities for repairs; but it is open to one objection—that is, a great portion of the water used for cooling can be but slightly heated, and can therefore do but little work. This will be understood when it is considered that each transverse tube acts independently, and the water passed through each tube cannot therefore be raised to a higher temperature than that of the wort with which that particular tube is brought into contact. Thus the water passing through the tubes near the end at which the wort escapes will probably not be heated to more than from 60° to 70°, whilst near the end at which the wort enters it can be raised to within a few degrees of the initial temperature of the wort. The result of this is that a greater proportion of water will be required to cool a given quantity of wort than if there was a single

2101.

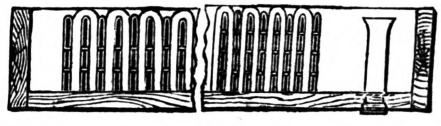

2102.

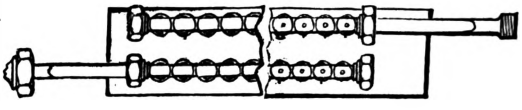

2103.

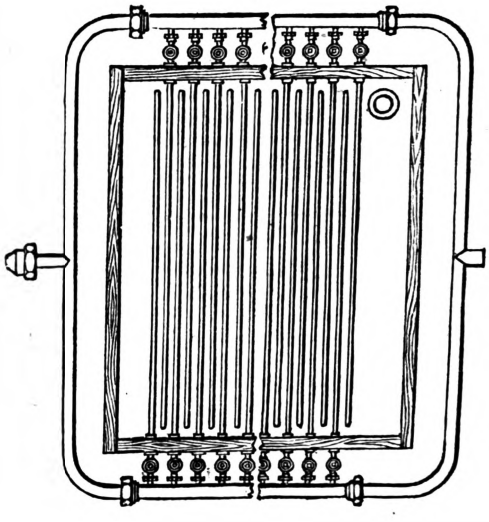

2104.

continuous current of water flowing in an opposite direction to that of the wort. To a certain extent this coil can be remedied—although it cannot be entirely overcome—by so regulating the openings of the cocks connecting the transverse tubes with the supply mains, that those tubes which are nearest the end at which the wort enters may receive the largest supply of water, the supply being gradually diminished towards the other end of the refrigerator. See ATTEMPERATOR. BREWING APPARATUS.

COPPER. FR., *Cuivre;* GER., *Kupfer;* ITAL., *Rame;* SPAN., *Cobre.*

Pure copper is of a light reddish-brown colour and of a high lustre. It is one of the most ductile and malleable metals. Sheets and wires may be formed of it with the greatest facility. Its fracture is similar to that of tin, or wrought iron. After hammering, its appearance is silky and its lustre seems increased. Its specific gravity when cast is 8·85, in wire 8·93 to 8·94, in sheets 8·95. Copper fuses at 1922° Fah., and absorbs oxygen from the air when that is accessible, so as to reduce its specific gravity to 8·7 or 8·8. It may be welded when pure. Heated to fusion it absorbs oxygen and oxidizes the surface, and becomes covered with a black crust; by a strong heat in the muffle it may be converted into suboxide altogether. Heated to a white heat, it burns with a light-green flame. In dry air, copper is unchangeable; in moist air and in that containing carbonic acid, sulphuretted hydrogen, or other acids, it becomes dark green and assumes a bronze colour.

Copper ores form an extensive class of minerals, which it is difficult to distinguish by mere ocular inspection. However, at all copper veins oxides more or less green are found on the surface, which, in connection with other marks, form a sure indication of the presence of copper ore.

Native Copper.—This occurs in crystals disseminated through rocks, usually massive, in the form of scales; and compact masses ramifying the rock in all directions. It is found in beds, veins, and detached masses and grains, in solid rock and imbedded in loose soil. Most of the copper-ore veins contain metallic copper. Native copper is distributed over the whole surface of the globe, but nowhere is it found more generally and in larger masses than in the United States. It occurs in the greatest abundance at Lake Superior, near Kewenaw Point; at the Ontanawgaw River, and other localities of that region. Masses of native copper, of 80 tons weight, have been excavated in the Cliff Mine at Lake Superior. The copper occurs here in trap or sandstone rock, or near their junction, in the form of injected veins.

The usual copper ores are sulphurets and oxides; the former are more abundant than the latter. Copper is also found combined with arsenic, selenium, antimony, iron, silver, and acids.

Sulphuret of Copper.—This occurs in various forms. Copper glance is one of the varieties frequently met with in copper-ore veins. Its specific gravity is 5·5, lustre metallic, colour and powder black or lead-grey, fracture conchoidal. It occurs frequently massive, but also granular and in fine powder. When pure it consists of 77·7 copper, ·91 iron, 20 sulphur, and some silica.

Copper Pyrites, or yellow copper ore, is the most common sulphuret used in the smelt-works. It is rather light; its sp. gr. 4·1 to 4·3, colour brass-yellow; it is subject to tarnish in the air, and is then iridescent. It forms a greenish-black powder, of sharp edges. It always contains much iron, and is on that account highly esteemed in the smelt-works. Its composition in crystals is 34·40 copper, 30·47 iron, 35·87 sulphur, and sometimes a little quartz. It is often largely mixed with iron pyrites—in fact, so far that the latter fills the vein—and there are either only traces, or but a small percentage of copper ore in the mixture. Copper pyrites is the principal ore of the English smelt-works, as well as those of America, along the Atlantic coast. The bulk of copper is manufactured of this ore. Although copper pyrites is found in great profusion, the ore is always poor; it does not often yield more than 12 per cent., and frequently the body of a vein does not often contain more than 2 per cent. of copper. When it can be brought at reasonable prices to the smelt-works it is valuable, for it is much liked in the furnaces. It yields its copper with great facility, requiring but little labour and the use of little fuel. The contents of copper in an ore of this kind may be estimated by an experienced person on mere inspection. A bright yellow colour and softness indicate a rich ore; a dull yellow, or pale yellow, and great hardness, are indicative of a poor ore. Copper pyrites is readily distinguished from iron pyrites by its inferior hardness—it may be cut by a steel point or a knife; this is not the case with iron pyrites, which will strike fire with steel, but not so that of copper. Spangles of this ore are distinguished from those of gold by their brittleness.

Grey Copper.—This is a variety of sulphuret of copper, which, on account of its interesting composition and its good behaviour in the furnace, is much liked by the smelter. It occurs massive, granular, in a fine powder, and also crystallized. It is of a steel-grey, often iron-black colour; its sp. gr. is 5·1, and it is rather soft and brittle. The composition of this ore varies greatly, but on an average it contains from 25 to 40 per cent. of copper, from 20 to 30 of sulphur, and nearly as much antimony. This forms the bulk of the ore; but it contains besides arsenic, zinc, silver, quicksilver, lead, platinum, and other metals.

Oxide of Copper.—Red oxide of copper is hardly used as an ore. It occurs as an accidental admixture with other ores—particularly with native copper. It is of a cochineal-red colour, occasionally crimson-red, or various shades of red. It occurs in the form of a powder, granular, massive, and crystallized. Other varieties of oxide of copper, such as the black oxide, are of no practical interest.

Silicate of Copper.—This occurs chiefly as an accidental admixture of other ores, and is a constant companion of them. It is green, varying from the emerald-green of the dioptase to the sky-blue of the chrysocolla; when impure, it is brownish or of an earthy colour. It is most frequently translucent, not often opaque. Its sp. gr. is 2 to 2·2. The ore contains frequently carbonic acid.

Carbonate of Copper.—Malachite, green carbonate of copper. This is similar to the silicate of copper. It is an ore which accompanies other copper ores. As an ore of copper it is of little consequence, however rich it may be, because not much of it is known to exist. Its composition is 71·82 protoxide of copper and 20 carbonic acid, 18·18 water.

Besides these ores of copper, there are sulphates, phosphates, arseniates, chlorides, and others, all of which are of little practical interest; they are companions of other copper ores, and occur only in small quantities.

Alloys of Copper.—Of all other alloys, those of copper are of most interest. Copper alloyed with arsenic is extremely white, similar to silver; but it is brittle and hard. With zinc it forms brass; and the amount of the respective metals determines the variety of this alloy. Pure copper does not form close and compact castings. Instead of pure copper, about 99 of copper and 1 zinc is considered pure cast-copper. Zinc is introduced by adding about 2 oz. of brass, poor in copper, to every pound of copper. This quantity may be varied from ½ oz. of brass to 3 oz. for every pound of copper. Gilding metal consists of 1 oz. to 1¼ oz. of zinc to 1 lb. of copper; it is of a bronze colour. Red sheet is 3 oz. of zinc to a pound of copper. Manheim gold, pinchbeck, 3 oz. to 4 oz. of zinc to a pound of copper. Ordinary brass of a red colour, for being soldered, contains 6 oz. of zinc to a pound of copper; 8 zinc, 16 copper, is a fine brass. Any proportion between 50 zinc, 50 copper, and 37 zinc, 63 copper, will laminate well and make good sheets. Common brass is 50 copper, 50 zinc. Solder may be made by melting brass, and casting it through a broom or faggot of brushes, into a tub of water. Or, the whole metal may be cast into iron moulds in the form of small cubes, of about 1 lb. or 2 lbs. each. When these are gently heated, nearly to melting, they may be broken up into small fragments by a smart blow of a hammer after placing the hot metal on an anvil or a thick cast-iron plate. It is stated that 50 copper to 52 or 58 zinc forms a dark-coloured metal, which on dipping forms a gold-coloured metal—mosaic gold. Zinc 32 to 16 copper forms a bluish-white, brittle metal, which may be pounded in a mortar. Zinc 8 and 1 copper forms a white metal little differing from zinc except in tenacity; this alloy is stronger than pure zinc.

Copper and zinc appear to mix in all proportions, and the extremes of both assume the characters of the principal metals. The red colour of copper is blended by the white of zinc to all shades from red to white. In forming brass by melting the two metals together, a heavy loss of zinc, which varies from $\frac{1}{10}$ to ½, is always experienced. The usual plan of smelting brass is to melt the copper in a blacklead pot first, dry and heat the zinc near to the melting-point, and drop it gradually, in small pieces, into the copper, when the latter is not hotter than barely to continue fluid. The Editor of the present work found, by experiment, that the zinc should be added when cold but dry. When the surface of the hot metal is covered by fine charcoal, which is prevented by renewal from burning, the smallest loss of zinc is sustained. Tombac consists of 85 copper, 15 zinc; prince's metal, 75 copper, 25 zinc; fine brass for turning, 66 copper, 32 zinc, and 2 lead.

Copper and tin form another most interesting series of alloys; 20 copper and 1 tin is a flexible, tenacious alloy, good for nails and bolts; 9 copper, 1 tin, was ancient bronze—7 to 1 is hard bronze; the addition of a little zinc improves this article. Soft bronze, which bears drifting, rolling, and drawing, is generally composed of 16 copper to 1 tin; 12 copper to 1 tin is metal for mathematical instruments; 8 to 1, bearings for machinery; 9 to 1, a very strong metal; it may be considered the most tenacious of this series. Copper 5 to 1 tin, is very hard, crystallized, good for hard bearings in machinery. A soft metal for bells is formed of 3 tin, 16 copper; 7 tin, 32 copper, is for Chinese gongs and cymbals; 1 tin, 4 copper, is for house bells; 9 to 32, large bells. Speculum metal ranges from 1 tin and 2 copper to equal parts of both metals. Ordinary bronze is 78 copper, 17 zinc, 2·5 tin, 2·5 lead. Large bells are cast of 80 copper, 6 zinc, 10 tin, 4 lead. A very fine large bell consisted of 71 copper, 26 tin, 2 zinc, 1 iron. A good average bell composition is 75 copper, 25 tin. 90·5 copper, 6·5 tin, 3 zinc, is an imitation of gold; 91·4 copper, 5·5 zinc, 1·4 lead, 1·7 tin, composes bronze for large statues. Copper 80, tin 20, is common statue bronze; 92 copper, 8 tin, is bronze for medals; 85 copper, 14 tin, 1 iron, is the composition of ancient weapons. Copper 62, iron 6, tin 32, is the composition of ancient mirrors.

The melting together of tin and copper is less difficult than that of zinc and copper, because tin is not so liable to evaporate as zinc, and little metal is lost. The appearance of the alloy may be improved by covering the melted metal with about one per cent. of dried potash; or, which is better still, a mixture of potash and soda. This flux has a remarkable influence on the colour, and particularly on the tenacity of the alloy. The former becomes more red, and the latter stronger. The scum forming on the surface by this addition ought to be removed before the metal is cast. Tin and copper are liable to separation in cooling; this can be prevented, at least partly, by turning the mould containing the fluid metal, and keeping it in motion until it is chilled.

The ancients manufactured their tools of copper, and hardened them as we harden iron. This art appears to have been understood over the whole world, for the Asiatic nations, Africans, and Europeans, as well as the American Indians, knew how to render copper hard. The copper of these ancient people was always impure, very likely in consequence of the composition of their ores. Their bronze-metal contains always more or less tin, lead, zinc, arsenic, silver, and gold. The hardening extended frequently through the body of the metal, but generally it was confined to the surface.

A remarkable difference is perceptible between the alloys of copper and those of iron in respect to hardening. Iron alloys, and most others, become hard on being heated and suddenly cooled, while copper alloys become softer by such an operation. Compression has a similar effect on these alloys, as on all other metals—it renders them hard.

Copper and lead unite only to a certain extent; 3 lead and 8 copper is ordinary pot-metal. All the lead may be retained in this alloy, provided the object to be cast is not too thick. When the cast is heavy, or much lead is used, it is pressed out by the copper in cooling. One lead, two copper, separates lead in cooling—it oozes out from the pores of the metal; 8 copper and 1 lead is ductile, more lead renders copper brittle. Between 8 to 1 and 2 to 1 is the limit of copper and lead alloys. All of these alloys are brittle when hot or merely warm.

Alloys of copper are subject to the same laws as others; and as they are generally more tenacious, more use is made of them. Phosphorus renders copper very hard, brittle, fusible, and oxidizable.

Clean copper, held in the vapours of phosphorus, is successfully hardened. A very little of this substance melted together with copper, causes it to be very hard, similar to steel. Carbon combines with copper and causes it to be brittle. Silicon also combines with it, hardens it, and, if present in a small quantity only, does not impair its malleability. Arsenic has only a faint affinity for copper; still the last traces of it cannot be driven off by mere heat: the combination is brittle. Equal parts of copper and silver, and 2 per cent. of arsenic, form an alloy similar to silver, a little harder, however, but of almost equal tenacity and malleability. Antimony imparts a peculiarly beautiful red colour to copper, varying from rose-red in a little copper and much antimony, to crimson or violet when equal parts of both metals are melted together.

Uses.—The application of copper, either in its pure condition or as an alloy, is so universal that but little can be said on this subject. It is used for sheathing and bolts for ships, for boilers in factories, distilleries, dyeing establishments, steam-boilers, &c. Rollers, shaft-bearings, engravers' plates, and kitchen utensils, are manufactured of pure copper or its alloys. For cylinders, water-pumps, coins, wire, and a multitude of purposes it is also used. Its oxides form fine colours, but are deadly poisons.

Manufacture of Copper.—Smelting of copper is an extremely simple process, because it is as permanent as iron, and little affected by heat and oxygen. The metal which occurs mixed with gangue, consisting chiefly of silicious rock, is cut into small lumps that may enter the furnace; these are in some instances of a ton weight and more. Or, if the metal is disseminated through the mass of the rock, either in grains or in small veins, it is pounded and washed in a stamping mill, and the contents so far concentrated that the sand contains from 70 to 75 per cent. of copper. This is called stamp-work, and sent in barrels from the mines to the smelt-works. Copper from this kind of native metal is smelted chiefly in reverberatory furnaces. Small blast furnaces are often employed to smelt copper. For smelting it thus, from stamp-work or lumps, any reverberatory furnace may be used, either of those in which copper is refined or smelted, or a roasting furnace may be easily converted into a smelting furnace. The operation is simple, and will be described hereafter.

Smelting in Reverberatory Furnaces.—There are two distinct methods of smelting copper ores; the one is in reverberatories, and the other in blast furnaces. As the operations are similarly conducted in the various countries where they are practised, and as the smelting of copper ores in reverberatories is done with skill and much experience at Swansea, we will first describe the operation as it is there performed.

In all instances the copper ores are sorted at the mine, the lumps broken, and large pieces of rocky matter thrown away. The ore is then classified in various qualities, of which the impure ore is sent to the stamps to be crushed and washed. Clay ores are broken into small pieces and washed by hand. All the rich ore, or that ready for smelting, is broken with the beater to lumps of the size of nuts, and freed from light impurities by riddling.

The small and impure ore is washed with a sieve in water, which carries away the stony parts and leaves the metalliferous ore in the tub. Those parts of the ore which are very impure, but will pay for crushing and washing them, are sent to the stamping mill.

The stamping mill is similar to the one given, p. 273. The ore is here converted into powder, more or less fine, and separated from gangue in the labyrinth or slime troughs; or, the ore is washed on the sweep-table, shown in Fig. 2105. In fact, the purifying of copper ore does not essentially

2105.

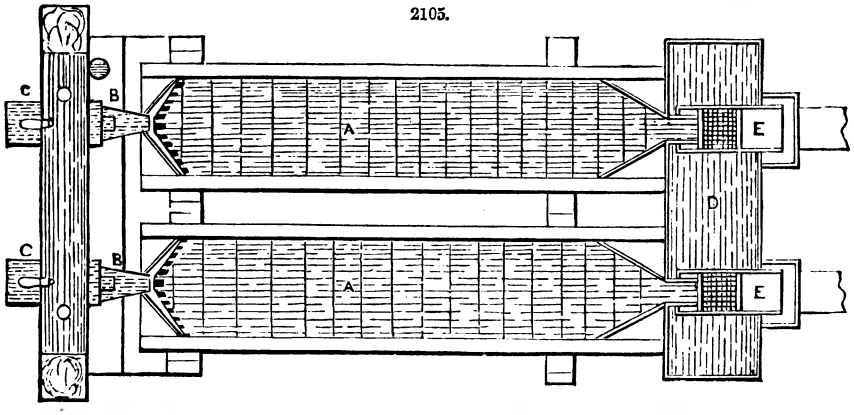

differ from that of other ores. But as the specific gravity of copper ore is small, much care should be taken not to crush it very fine in the stamps.

The furnaces used in this operation are five in number; they are all of similar construction, and so far all the various operations may be performed in the same furnace at different times. Still it is found to be profitable to divide the operation, and perform it in different machines. In Fig. 2106, A, is shown a plane, and in B, Fig. 2107, a vertical section of a reverberatory calcining furnace. This furnace is not essentially different from other reverberatory furnaces. The vault C is an addition; into this the ore is discharged when calcined. The furnace is constructed partly of fire and partly of common bricks, and strongly bound. The hearth is from 18 ft. to 19 ft. long, and 14 ft. to 16 ft. in width. The fire-grate is 5 ft. by 3 ft. The fire-bridge is hollow, and through it fresh air is conducted to the ore under treatment. Two hoppers *h*, *h*, serve for letting in the ore. The chimney is low.

The first process is the calcining. Three and a half tons of clean ore are charged into the

furnace at a time, which is, with occasional stirring at intervals of two hours, ready to be withdrawn after a heat of twelve or fifteen hours, and let into the cab—vault—beneath. Here it remains as long as possible in a close heap, at least so long as the vault is not needed for the next charge. When the ore is withdrawn it is spread evenly on a floor and damped. In this operation it loses much of its sulphur, and after being cold and wetted is ready for the next operation.

2106.

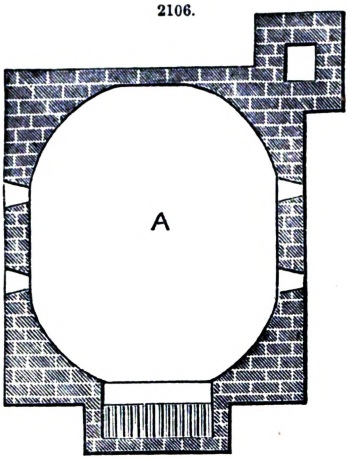

2107.

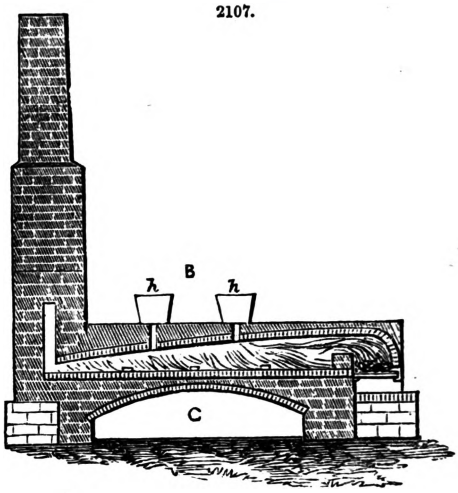

The second process is the smelting of the ore. The furnace for this purpose is much smaller, only 11 ft. long, and 7 or 8 ft. in width. The grate is as large as the one in the calcining furnace, because a higher heat is here required. The furnace has only one work-door at the flue, and in one side a similar aperture for cleaning the hearth. The hearth is formed of coarse sand, and slopes slightly towards the door in the side. Below this door there is an iron grating which covers a vault of water, into which the metal is discharged and granulated. A hopper is placed in the top of the furnace for letting in the charge.

A charge in one of these furnaces consists of 21 to 24 cwt. of roasted ore, which takes four hours for smelting, adding slags from refining, and also fluxes, if such are necessary. Two cwt. of slags are generally charged with the ore, besides lime, fluor-spar, or other fluxes, according to the quality of the ore. The time of smelting these charges is four hours, after which the slag at the top of the metal is skimmed off by means of a rabble, and drawn out at the work-door into a bed of sand. The metal is not drawn at every heat, but only once or twice each twenty-four hours. A second charge of ore is therefore thrown into the furnace, after the poor slags are removed; the furnace is then shut once more, and that charge melted. When the metal, which is matt, an alloy of all the metals in the ore, and sulphur, rises as high as the bridge at the work-door, the tap-hole below is opened, and the matt either run into the basin of water below the furnace for granulation, or into a bed of damp sand. The metallic grains which are thus formed oxidize rapidly, particularly on their surfaces. The colour of this crude metal is a steel-grey, its fracture compact, and it is of much lustre. The scoria rejected after this process contains always some metal; copper and tin are found to be present in 1 or 2 per cent. in this silicious slag. The matt produced contains about 33 per cent. of copper, or four times as much as the ore; the other 66 per cent. is chiefly sulphur and iron. If with the use of the refining slags the ore does not flux, the addition of fluor-spar is resorted to. Great care must be taken not to use too much of these fluxes, for all scoria, no matter of what description, will contain copper; and the more slag there is made, the greater must be the loss in metal. The size of the smelting furnace is so regulated, that it consumes all the ore which is calcined in the first furnace.

The third operation is that of smelting the crude metal, or matt, of the second process, with the slags of the fifth process. This slag is chiefly a peroxide of iron, and the operation may be called on this account a roasting one. This calcination is performed in the large furnace, represented in Figs. 2106, 2107. The charges consist of 2 tons of matt, with nearly an equal amount of slags. The operation lasts twenty-four, and sometimes thirty or thirty-six hours, under repeated puddling of the ore. In this process much care must be taken to regulate the heat; it should be performed on the principles of roasting, by commencing with a low heat, which is gradually increased to the melting-point. The ore is tapped into the vault under the furnace, and oxidized by exposure.

The fourth process. This is again a smelting operation performed in the smelting furnace, of which Fig. 2108 shows a plan. The charges are 28 or 30 cwt., and a heat lasts from five to six hours, or when slow, eight hours. At every charge the metal is tapped, which now is a rich matt of 66 per cent. of copper. It is frequently very pure, and then it is called fine metal, and run into moulds, forming pigs; sometimes all of it is pimpled copper. In this operation there should be still so much sulphur in the metal as to cause sufficient fluidity; if there is a lack of it, some green ore is charged with the matt. When the metal from this operation is far from the reguline state, it is run into water and granulated.

The slags from this last smelting, together with some other slags, are sometimes melted in a furnace by themselves, which forms a particular operation. The matt obtained from these slags is a white and brittle alloy. The slags are also partly thrown away, but most of them are used in

the first process. The matt obtained is smelted separately, and then added to the first smelting, or the second operation.

Fifth process. The fine metal in the form of pigs of the foregoing operation, is charged to the amount of 2½ or 3 tons at once in the calcining furnace, and exposed for twenty-four hours to a gentle heat. It should not melt, at least not for sixteen hours, and when melted afterwards it is to be repeatedly skimmed. The metal from this calcining operation is drawn into a bed of sand, and formed into pigs, which are fine metal for the refining furnace.

2108.

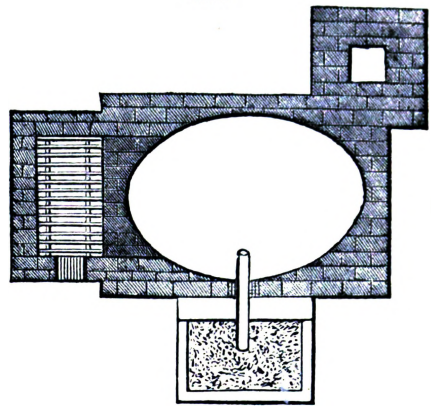

The sixth process is that of refining or toughening the metal. This operation is done in the smelting furnace; a charge of metal is from 3 to 5 tons. The pigs are exposed in the furnace to a roasting heat for twelve or sixteen hours, then the charge is melted, skimmed, and worked as clean as possible. A test of the metal is, after twenty hours' heat, taken by means of an iron ladle. A small wrought-iron foundry ladle is washed and heated in the fluid copper until it becomes red hot, or as hot as the metal itself. A ladle full of metal is now taken from the furnace and exposed to a slow cooling in the air. If the copper is fine enough, it will settle considerably in the ladle. The surface of the metal in the furnace is now covered with fine charcoal and prepared for refining. If the copper in the ladle swells up, or shows veins or black spots, it is not fine enough. In order to accelerate the process, a pole of wood is now used for stirring the metal diligently for ten minutes, after which another ladleful is taken for trial; it is now found to be fine, it will settle in the ladle. Good fine metal is brittle, of a deep colour, coarse grain, porous, and crystalline. The surface of the melted copper is now covered with fine charcoal, and the metal repeatedly stirred by means of wooden poles. The grain of the copper becomes finer by this operation, and the metal tougher. A test of the metal is now repeatedly taken in a small iron ladle, and when considered sufficiently refined, it is tried by means of a hammer on the anvil, while still red hot. If the metal forges soft, does not crack on the edges, and the refiner considers colour and grain sufficient, it is ladled out of the furnace with large ladles and cast-iron moulds. These form either pigs or slabs, 12 in. wide, 18 in. long, and 2 or 2½ in. thick. These slabs are ready for the rolling mill.

In the progress of these different operations, the use of the slags forms a remarkable point for consideration. From the last smeltings the slags go back to the first process, to be either calcined or smelted. The refining slags are smelted with the metal in the formation of matt; and those from the smelting of matt are used in the calcining operation. The arrangement is such that the slag from the last operation is returned to a previous one. In each smelting some of the slags are thrown away, as too poor for the further work of extraction.

The fine metal of the sixth operation should be blistered or pimpled metal, containing from 94 to 96 per cent. of copper. Pimpled metal always assumes blisters, like those on converted steel, when cast into a sand-bed. The heat on the fine or blistered metal is longer or shorter according to its purity; an impure metal requires more heat than a pure metal. In some instances but a few hours' roasting are sufficient, in others a longer time is required. When the copper is melted in the refining furnace there is no harm done in stirring and cooling it, alternately, so as to chill the metal, and then melting it again. The rabbling, or puddling, must be continued until the copper is fine; in this operation the foreign metals become oxidized and vitrified. The slags of all the various operations contain more or less copper, particularly those of refractory ores. Neglect in skimming causes the slags to absorb and retain much metal. The slags of the coarse metal, or matt, take up the oxides of iron and tin, and often contain 5 per cent. of copper; they are therefore re-smelted. If the ore contains much tin, antimony, lead, and other metals, the slags of the fourth operation are smelted in a slag furnace, and the metal obtained used as pot-metal, either for brass and copper nails, or, if much tin and lead are present, pewter is formed of it.

When the point of refining is passed, in the operation of refining copper, the metal deteriorates in value, it becomes carbonized; this is prevented by exposing the hot surface to the action of the flame, and in skimming charcoal and slags off. Good metal is bright on the surface in the furnace. It is of a fine red colour when cold.

In the Blast Furnace.—The other method of smelting copper ores is in the blast furnace. The ore for this operation is sorted, washed, stamped, and in fact prepared as lead or silver ores. Poor ores, such as copper stists, are roasted in heaps, for fifteen weeks or longer. In smelting, matts are formed, as in reverberatories, which are re-smelted, and finally refined. In Figs. 2109 to 2111, two vertical sections, A and B, are shown of a blast furnace; and in C, Fig. 2111, the plane section with its two basins D D. The height of the furnace is about 14 or 15 ft.; the widest part of the boshes 39 in.; the hearth is 2 ft. square. The basins D D are 3 ft. in diameter and about 21 in. deep.

The copper ores, after having been roasted, are smelted by charcoal or coke—anthracite is perhaps preferable to either. The tuyere is generally pushed far into the furnace, so as to concentrate the heat in its centre. About 4 tons of ore are smelted in twenty-four hours with a considerably strong blast. In this operation a matt and a slag are smelted; the first contains from 30 to 40 per cent. of copper, and the latter frequently 5 or 6 per cent. more or less, according to the kind of ore. The matt contains sulphurets of copper, iron, silver, zinc, arsenic, cobalt, and in fact all those metals which were originally in the ore. It is tapped alternately into the basins and the slags removed from its surface. In cooling, it forms on its surface round plates which may be lifted from the

fluid metal. These contain matt of a variety of compositions, according to the height of the metal in the basin.

2109.

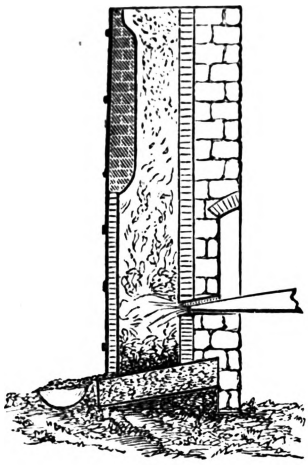

2110.

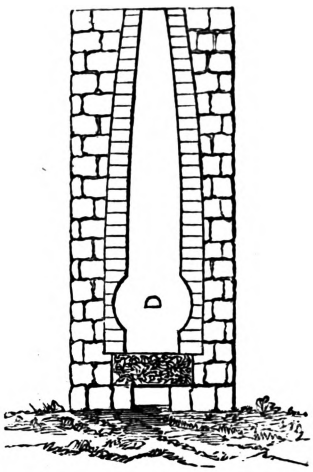

2111.

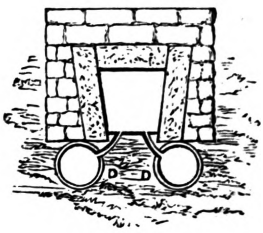

The matt thus obtained is generally roasted, either in kilns, or more generally, at present, in reverberatories, of which Fig. 2112 represents a vertical section of a German one. Fig. 2113, B, shows the same furnace in an opposite section to that of A, Fig. 2112. Above the two furnaces there is

2112.

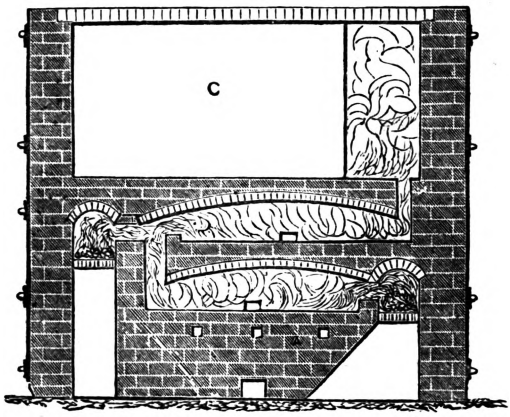

2113.

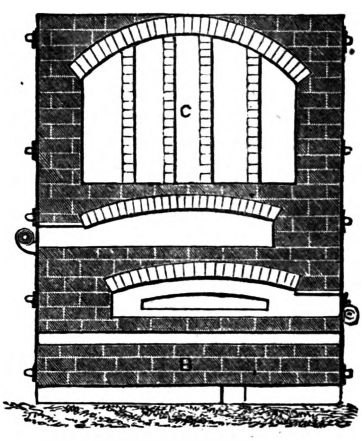

a condensing chamber C, into which the volatile metals are conducted. These two furnaces, one above the other, are so arranged that either of them may be used separately. The flame is then conducted from the lower furnace in a separate flue into the condensing chamber, the partitions in which are so arranged that the gases are conducted from one into the other until they escape into a chimney.

The matt is roasted in these furnaces from three to six times; this is, therefore, an extremely slow operation; subsequently it is exposed to smelting again in the blast furnace. Crude copper is now obtained of a granulated fracture, which is ready for refining. After the above-mentioned roasting is performed, the ore is lixiviated in water, in order to extract the soluble sulphate of copper, which is precipitated by means of metallic iron. The coarse or black copper forms the lowest stratum in the smelting furnace, and also the basins; above this floats a poor matt covered by a silicious slag, which is thrown off and rejected. The matt and the metal underneath are gradually lifted out as it cools, and are in the form of rosettes.

The fine copper thus obtained from the blast furnace is most generally refined in reverberatory furnaces. In all instances that copper which has been smelted in blast furnaces is subjected to refining in the reverberatory, if it is brought into market directly from the blast furnace: this kind of copper is quite impure, which renders it unfit for being rolled into sheets. The impurities are most successfully removed in the reverberatory, as they consist chiefly of carbon and oxidizable metals.

A copper-refining furnace, as it is used by the Germans, is shown in Fig. 2114 in plane. The hearth A, 7 ft. in diameter, is formed of sand, or clay and fine charcoal. B B are two receiving basins, for ladling out the copper, or forming rosettes of it. Three tons of black copper are melted at once, and as soon as the metal is fluid the bellows are set in operation, which, by means of the tuyeres C C, furnish blast on the surface of the metal, and oxidize it rapidly. A thick slag is thus formed, which is constantly drawn off, so as to expose a clean surface to the action of the blast. The refining lasts about sixteen or seventeen hours, and the loss of metal amounts to 3 per cent., which is absorbed by the slags. The latter is returned to the blast furnace.

The expenses for smelting copper ores are high, on account of the many and tedious operations which must be performed. Poor sulphureous ore, or that which contains but 8 or 10 per cent. of copper, is the most profitable in the reverberatory; rich ores should be smelted in the blast furnace. Ores of 9 per cent. consume 20 tons of mineral coal for the production of 1 ton of metal; poorer or richer ores than these cause the use of still more fuel. The labour spent in working the ore amounts to still more than the fuel consumed.

2114.

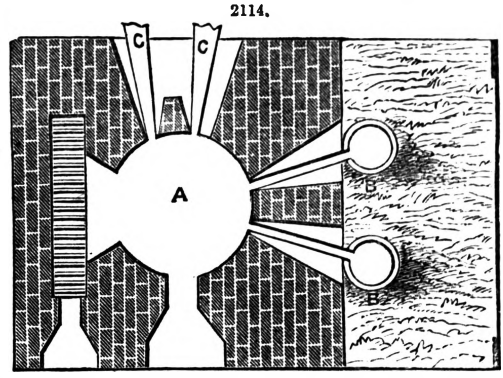

Copper is brought into market in different forms. For melting brass it is sold in a granulated form—bean-copper. This is produced by pouring it through an iron strainer, made of a ladle, into cold water. Hot metal causes round beans, cold metal oblong beans. Russian copper is sold in small square slabs; Spanish copper in the form of pigs.

The rollers used for laminating copper or brass are plain cylinders, as shown in Fig. 2115, not often more than 36 or 40 in. long, and 16 in. in diameter. Rollers 5 ft. long and 20 in. in diameter are used for large sheets. Slabs for rolling are gently heated on the hearth of a reverberatory furnace, Fig. 2116, to a dull red heat. At first singly, and as the sheets become thinner, they are passed in pairs, or three sheets and more at once, through the rollers. In the process of lamination the metal becomes cold, and by compression hard; it is therefore reheated, which serves in the meantime, when performed slowly, for annealing. When large sheets are to be rolled, the annealing furnace must be of a sufficient size to contain them. They are greased before passing them between the rollers.

2115.

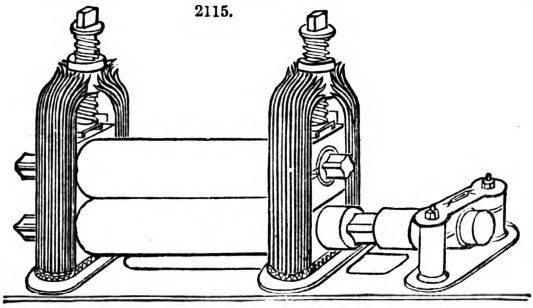

2116.

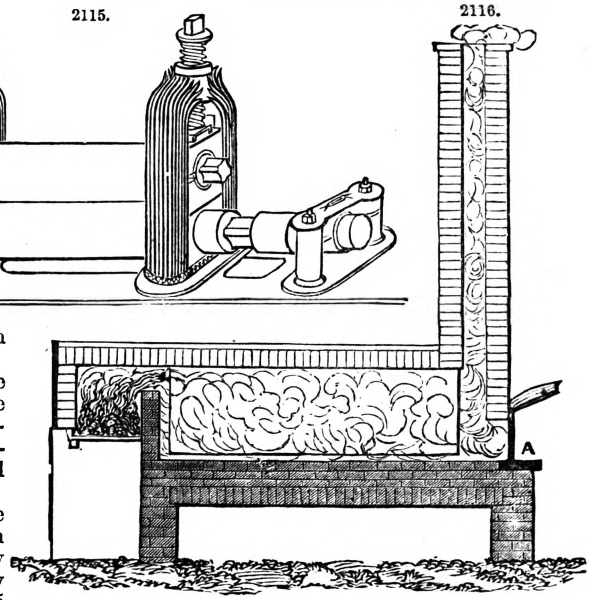

Some kinds of copper contain large quantities of silver, for which the Lake Superior copper is particularly distinguished. We shall allude to the extraction of this metal under the head of silver.

Theory of Smelting Copper. — The copper of commerce is not pure; it is an alloy, as well as other metals. A quality of Norway copper, much esteemed by brass manufacturers, contains 99·5 copper and ·5 lead. Hard Hungarian copper contains 99 copper, ·7 antimony, ·1 iron. A superior quality of Swedish copper was composed of 8·66 copper, ·75 lead, ·05 iron, ·23 silver, ·05 silicon, ·02 aluminum, ·03 magnesium, ·12 potassium, and ·09 calcium. These assays show how much impurity copper may contain, and still be considered as a good article. The purest kind of copper should be employed for sheets. A minute quantity of lead causes copper to roll badly, and iron causes it to be brittle. Other mixtures are less injurious than these metals. It has been observed that the purest copper contains protoxide of the metal, a fact which is established in most other metals. The best kinds of copper are those which have been smelted by charcoal, and contain minute quantities of potassium. Bell-founders and other workers in bronze and brass are in the habit of covering the metal with potash or soda. This causes it to be close, sonorous, and of a fine grain. The substances most injurious to copper are lead, iron, antimony, silicon, carbon, sulphur, phosphorus, arsenic, and some other. Small quantities of lead, iron, nickel, silver, aluminum, magnesium, calcium, sodium, and potassium, improve the tenacity and general qualities of the metal. In refining copper, it must be therefore of advantage to have the surface of the metal covered with charcoal which has been soaked or damped with a solution of carbonate of potash or soda. These alkalies cause the removal of lead, tin, zinc, and iron, and prevent the flying or boiling of the metal.

The fine copper of the smelter, pimpled copper, black copper, or blistered copper, is an impure copper which contains much iron. This kind of metal is so far purified copper as to show its colour and faint metallic properties. Black copper, smelted of pyrites, contained 95·7 copper, 2·9 iron, ·6 zinc, and ·8 sulphur. Some crude copper, smelted of carbonates and oxides in the blast furnace, was composed of 89·3 copper, 6·5 iron, 2·4 peroxide of iron, ·3 sulphur, and 1·3 silica. We may mention that silica, combined with the protoxide of iron, exists in the form of slag in the copper. A coarse metal, which was derived from a refining cinder, contained copper 27·6, iron 2·5, cobalt

19·7, nickel 35·2, lead 12·4. A metal which furnished a prime quality of copper, in refining it, consisted of 95·5 copper, 3·5 iron, ·4 bismuth, ·6 silver.

The composition of the crude metal depends on the composition of the ore. In metal derived from sulphurets much sulphur is found; and in that from oxides other metals form the impurities, which must be removed before the metal is saleable. Iron forms, in most instances, the bulk of the impurities, and it must be the object of the refiner to remove it entirely. The presence of silica is required to oxidize and remove iron; but, as the oxide of copper has also a strong affinity for silica, the heat should be low, and the iron slag, as soon as formed, should be removed by skimming the metal. In crude copper derived from pyrites, the iron may be supposed to be present as sulphuret; and as, in oxidizing this, the metal is oxidized to the highest degree, it is necessary that carbon should be present to reduce the peroxide of iron thus formed, and convert it into protoxide, suitable for a union with silica. Such crude copper should therefore be refined under cover of charcoal, agitated by means of wooden poles. Copper smelted of oxides contains the iron in a metallic state, in the form of grains; for the affinity between these two metals is so faint that they do not unite chemically. The proper mode of refining this kind of crude copper is to melt it at a pretty strong heat, and stir or puddle it by means of an iron rod or hook, such as shown in Figs. 2117, 2118. Other substances than those above mentioned are easily removed from copper. Lead, zinc, bismuth and arsenic are volatile, or their oxides combine readily with potash or soda, by the addition of which they will separate from the metal. A small quantity of precious metal does no harm to copper, and large quantities, such as one per cent. of silver or gold, may be profitably extracted from it. Cobalt is removed with the iron, and nickel does no harm, for the alloy may be used as argentan in case much of this metal is present. When iron chiefly is to be removed, a clean surface of the melted metal is required in order to facilitate its oxidation. All other metals ought to oxidize slowly, and the oxides should be supplied with some alkali to combine with.

2117.

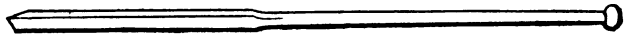

2118.

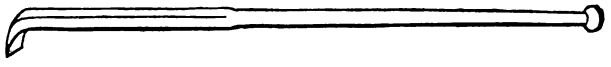

The impurities of copper are brought into the metal either by the ore, flux, or fuel. Iron is generally used as flux; if there is not sufficient of it present in the ore, it is added in smelting. But, as this method of using iron causes the formation of balls or lumps of refractory metal, or slag, in the furnace, the poor copper ore which contains iron as a natural admixture is preferred, since it is not liable to balling. The iron is in sulphuretted slags, in the form of sulphuret of iron. In slags derived from oxidized ores, it is in the form of protoxide. In the first kind of slag, sulphur causes its fusibility; in the second slag, silica. The former is a sulphuret, the latter a silicate. Both these compounds may be present in a slag; this, however, is not often the case. Generally, the silica separates from the sulphuret, and, as the first is not so heavy as the latter, it floats on its surface. In smelting, we thus obtain a slag which is a silicate, as the highest stratum, and a slag which is a sulphuret below that; the latter is called matt. When metals are present which have only a faint affinity for sulphur, such as lead, gold, or silver, these gather below the matt and slag, as we have seen in smelting lead. So long as sulphur is present in the slags, we cannot succeed in removing all the iron from the copper, nor all the copper from a sulphureous slag. Silicate of copper is refractory. All the metal may be extracted from a silicate, provided the union of copper and silex is prevented. The metal should be separated before silex is admitted to act on its oxide. Thus we have a series of operations in the reverberatory, all calculated to remove iron by means of silex, and retain and concentrate the copper in the form of a sulphuret or matt. The addition of silica to rich ores is, therefore, a necessity; but as it is difficult to estimate the proper quantity to be used, such rich ores are not always so profitable to work as the poorer kinds. Too much silex causes a stiff cinder which absorbs copper; and too little silex does not absorb all the iron, and forms a stiff slag which cannot be separated from the copper, and causes it to form balls and oxidize. In smelting copper, as well as other metals, the slags are never too fusible; stiff pasty slags always retain grains of metal. It makes no difference by what means copper slags are rendered fusible, provided they melt at a lower degree of heat than the metal itself. Copper cannot be reduced from its sulphuret—it should be oxidized; therefore the smelting of copper is divided into a succession of processes, consisting of alternate calcinations and smeltings.

Slag from a smelting of copper pyrites in a reverberatory contained 48·2 silica, ·5 protoxide of copper, 37 protoxide of iron, 3 oxide of tin, 4 lime, 1 magnesia, 1·8 alumina. This slag is thrown away, because it contains but little copper. Slag from roasted pyrites, smelted in a low-blast furnace, contained,—silica, 51·8; protoxide of copper, 1·4; protoxide of iron, 29·2; baryta, 8·8; alumina, 5. The same kind of ore, smelted with more iron, furnished,—silica, 35; protoxide of iron, 41; oxide of zinc, 3; baryta, 12; lime, 3; magnesia, 2; alumina, 4. This composition furnishes a more fluid slag than the former, and is consequently free from copper. When the addition of iron is necessary, it should be made in the form of forge cinder, or puddling-furnace cinder, from the iron-works; because that form of iron fluxes well, without furnishing metal. The following is an assay of a slag which contained too much iron; silica, 33·6; protoxide of copper, 3; protoxide of iron, 51·5; lime, 5; alumina, 5·6. This slag, besides containing much copper, caused the deposition of considerable iron in the smelted copper, which formed balls of refractory metal consisting of 89·4 iron, 2 copper, 7 cobalt, and 1·8 sulphur. We thus see that the quantity and form in which fluxes are used is of much importance in this operation. Copper may be smelted from crude ores with success, as it is performed in Sweden; but the operation requires skilful hands to manage it. The fluxes are arranged so as to form a silicate, consisting of silica 56·5; protoxide of iron, 14·9; lime, 6·3; magnesia, 14·3; alumina, 6. This is a first-rate slag, and works well in

the low-blast furnace. The flux commonly used is limestone and forge cinder. More lime and less iron causes the copper to be very impure, and the slags contain copper; it also causes vexatious work in the furnace. Slags from copper-smelting resemble the forge cinder of the iron-works; they are, however, generally not so glassy, and often contain oxide of iron not combined with silica.

The matter obtained in the various processes is a compound of metals and sulphur, differing with the kind of ore from which it is obtained and the mode of operation by which it is formed. Roasted pyrites, smelted in a low-blast furnace, such as is used for smelting lead, furnishes a matt consisting of 27 copper, 40 iron, 25 sulphur, and 8 earthy matter. Rich matt, smelted in a blast furnace 16 ft. high, from roasted ore, contained 58·6 copper, 13·2 iron, 23·2 sulphur, and ·6 earthy matter.

The slags obtained in refining furnaces are a combination of the oxides and sulphurets which are contained in the crude metal. Refining is at present exclusively performed in reverberatory furnaces, either with the assistance of blast or without it; in either case the metals are oxidized by the oxygen of the air, and the sand of the hearth furnishes the silica for vitrification. These slags always contain a large quantity of copper, and are therefore re-smelted, either by themselves, or returned to earlier operations. The predominance of other metals than iron in the slags is indicative of a corresponding quantity of copper. Oxide of antimony is particularly apt to form and absorb oxide of copper. Lead has a similar effect, but in a far less degree. The slags obtained from the refining operations are easily reduced in a small blast furnace, and furnish an alloy. Smelted in a crucible with black flux, an assay of them is obtained in which all the other metals are present except iron. Their appearance varies greatly; when they contain much iron and sulphur, they are grey or black. Slags which contain no sulphur are brown, semi-transparent, and often blood-red, magnetic, of all shades of colour between black-brown and light red.

On whatever principle the extraction of copper from its ores is conducted, the composition of the ore and flux is so arranged that the yield does not amount to more than 7 or 8 per cent. The first smelting yields then a matt of 30 per cent. of copper; the second smelting, one of 60 per cent.; and the third smelting, crude metal or pimpled copper of 75 to 85 per cent. In blast furnaces, ores of 2½ per cent., or less, in yield, may be smelted to advantage. Rich ores are smelted in a low furnace, the height of which varies from 5 ft. to 18 ft. The first smelting of a 2½ per cent. ore yields, in Sweden, in the first smelting, a matt of 60 per cent. of copper; and the second smelting, after roasting the matt, yields crude metal of 85 or 90 per cent. copper. In Germany, an argentiferous copper is smelted of bituminous slate in high-blast furnaces, which yields only from 1 to 3 per cent. of copper; the copper has not quite ¾ per cent. of silver. In all these various forms of smelting copper ore, a rapid oxidation by a high heat cannot be permitted, in order that the formation of silicates of copper may be prevented. Calcining is performed at a low heat, because if the ore was subjected to fusion in the operation, much copper would unite so closely with the silica as to become inseparable in the smelting furnace. Sulphur and silica are necessary fluxes in the reverberatory. In the blast furnace, copper ore may be smelted by fluxing it with lime or silicate of iron; and where the latter can be obtained in sufficient quantity, there is no doubt but that the smelting is cheaper when performed in the blast furnace than in the reverberatory. Refining should be invariably done in the reverberatory.

That ingenious and experienced manufacturing chemist, Peter Spence, of Manchester, has introduced some useful and important improvements in the metallurgical process of copper-smelting. Spence observes, in the Mining and Smelting Magazine (1864);—

"It is well known to those conversant with our staple chemical manufactures that, for many years back, a large proportion of the sulphuric acid required in them has not been produced from the sulphur imported from Sicily, but has been made from iron pyrites (bisulphide of iron) which is largely found in Ireland and Cornwall, and is also largely imported from Belgium and other parts of the Continent; and that, more recently, immense deposits of pyrites, rich in sulphur and containing from 2 to 4 per cent. of copper, have been found in the Peninsula, on the borders of Spain and Portugal. These last-named pyrites have come into extensive use, and, from their richness in sulphur, are preferred to the pyrites derived from other sources; so that the importers get a higher price for them than the value of the copper they contain, and consequently seldom sell them to the copper-smelters. The chemical manufacturer, in fact, has to purchase these ores at the value of both the copper and the sulphur, and, after extracting the sulphur, has generally to sell the ore to the copper-smelter, thus incurring a heavy cost in carriage on an article of small value per ton, and sometimes also a large loss from the uncertainty of the ordinary mode of assaying.

"From these circumstances, I found that in using Spanish pyrites the sulphur was costing me rather a heavy sum; and in 1861 I began to look round for some mode of lessening this cost. By extracting the copper from the burnt ores, if it could have been done without loss, I found I could save 600*l.* per annum in the mere carriage of the burnt ore to the smelters.

"I first, in connection with Rumney, of Manchester, went into the wet method of extracting copper. But having operated on nearly 2000 tons by various modifications of this method, our success seemed so problematical that the experiment was abandoned, with a loss of about 2000*l.* Indeed I am fully convinced by my own experience, added to that of almost all who have tried the extraction of copper by purely chemical wet processes, that such processes are not applicable in practice.

"I next turned my attention to the fact that the large copper-smelters in South Wales and elsewhere, were then, as they are at this moment, throwing out into the atmosphere, as to them an utterly useless product, the sulphurous acid gas which the chemist is so anxious to get cheaply, and that in quantities that would more than meet all the demands of the staple chemical manufactures. I asked myself whether I could not avail myself of this sulphur, which cost nothing and had no value to the smelter. The first difficulty was a mechanical one. All the pyrites then used in chemical works (whether Irish, Belgian, or Spanish) were imported in large masses, which were broken up into fragments of from 1 to 5 cub. in. in size. From these the sulphurous acid was extracted by

combustion in kilns somewhat similar in construction to small lime-kilns; but before charging the pyrites into these kilns all the dust or small had to be sifted out, as otherwise it would choke or damp the draught of the kilns and prevent combustion.

"When, however, attention was directed to the ores used by the copper-smelters, it was found that all the ores sold in Cornwall, and nearly all those imported, were crushed up before being sent to market, and that, in fact, the smelter used only small ores. Now, no method was then known by which these small ores could practically be calcined so as to economize the sulphur; for though repeated experiments had been made, at great expense, by the large copper-smelting firms to calcine their ores in such a way as to condense the sulphur, all such attempts had ended in failure—so much so that all endeavours on their part to effect this object have been abandoned.

"To prove that such is the case, I take the liberty of giving an extract from the evidence given by Dr. Percy before Lord Derby's Committee on noxious vapours.

"'Lord Derby.—The statement of Le Play, that 46,000 tons of sulphur are annually lost, only goes to this, that if there were any known means of preventing the evolution of that sulphur, there would be a saving to that extent?

"'Dr. Percy.—Undoubtedly, if it could be collected economically, it would be an advantage to the copper-smelters.

"'Lord Derby.—You are not prepared to say that it could be.

"'Dr. Percy.—I am not prepared to say that it can, by any known method. I am acquainted with all the attempts which have been made to obviate this nuisance—for a nuisance it undoubtedly is—but I believe they have not been found effective.

"'Lord Derby.—What, in your opinion, is the reason why it is impossible to condense, or in any way to dissipate, this vapour?

"'Dr. Percy.—I do not say it is impossible at all; all I say is that I know of no method, at present in existence, whereby it can be completely and economically condensed.'

"One of the attempts probably referred to by Dr. Percy was a furnace used by a Lancashire copper-smelter, chiefly for producing arsenic from the copper ores, but partially used for the production of sulphuric acid from these ores. While my attention was directed to the subject of copper ores as a source of sulphur, a friend of mine in Manchester got the plans, and erected one of these furnaces, which were called dummy furnaces. At his request I saw it while building, and without hesitation said it would be a failure, which it turned out to be; for, after being used for a few months, it was pulled to pieces, its fallacious principle becoming apparent. This being then considered the best thing hitherto tried for the purpose, I at once determined to attempt the erection of a furnace on what I considered sound chemical principles. The furnace I erected was successful in calcining the small ores with a small expenditure of fuel and labour, with elimination of all the sulphur, if that was required, and enabling me to send all the sulphur so eliminated into the vitriol chamber, as sulphurous acid gas. Very soon after, I erected additional furnaces; and all the sulphuric acid made at my works at Manchester and at Goole since the end of 1861 has been made from these small ores, treated in furnaces similar, with slight modifications, to the first one I erected. I have now (1864) eight calcining furnaces at work, and am using from 125 to 180 tons of ore a week; and, in fact, am doing exactly what Dr. Percy stated he knew no method in operation that was capable of doing—for all the ores used are precisely the same ores as those used by the copper-smelters. I buy them in Cornwall, at the same market as the copper-smelter—paying only for the copper, the sulphur not being of any value to the smelter, who would rather have his ores nearly without it, if he could so get them.

"The amount of sulphur wasted in copper-smelting, and which could be economized by the use of calcining furnaces similar to those used by myself, is something enormous. Le Play, who many years ago investigated the subject with great care, gave the ores then used at 4000 tons a week, and the sulphur in them as averaging 23 per cent. The quantity now used exceeds 5000 tons a week, which (by the result of many analyses made in my own laboratory) contain on an average 28 per cent. of sulphur. This gives 70,000 tons of sulphur per annum, which at the present price of brimstone (6*l.* 10*s.* a ton) gives a money value of 455,000*l.* This, however, is hardly a fair way of putting it, as sulphuric acid is more cheaply made from pyrites than from brimstone. But from the 250,000 tons of copper ore now used annually by the smelters, 200,000 tons of brown sulphuric acid (of specific gravity 1·75) could be produced—for I am actually making acid at that rate from these ores. This acid sells at from 3*l.* 10*s.* to 4*l.* a ton; but at the very low estimate of 2*l.* a ton, its cost price to the maker, the smelters are actually throwing away 400,000*l.* a year. Now, whatever may have been the position of the copper-smelter a few years ago, he is at the present time wasting all this sulphur when there is not the slightest difficulty in economizing nearly the whole of it as sulphuric acid, without at all interfering with the smelting processes."

2119. 2120.

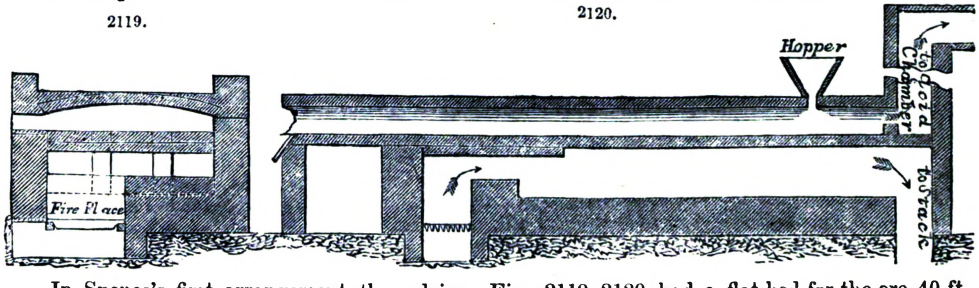

In Spence's first arrangement, the calciner, Figs. 2119, 2120, had a flat bed for the ore 40 ft. long by from 6 ft. to 9 ft. in breadth. Under this bed the fire-flues traverse nearly the whole

length of the furnace, to which furnace, however, the fire itself has no access. The ore is charged on to one end of this furnace-bed every two hours, in charges of from 5 cwt. to 8 cwt.; and, after two hours, is transferred, by iron paddles or slices, to some distance from the point where it was first charged; being replaced by another charge. This transference goes on every two hours, until the ore reaches the other end of the furnace, where, being fully calcined, it is dropped into an iron truck and removed. This charging and transference goes on periodically, air being continuously drawn in at the part of the furnace where the burnt ore falls out; which air, traversing the whole surface of the ore on the bed and effecting combustion, ultimately arrives at the other end highly charged with sulphurous acid gas, and passes up a special flue or chimney into the vitriol chambers. Nitrous gas is, as usual, found mixed with it as it enters the chamber. This process goes on day and night; and the furnaces are so regularly kept at the same temperature that their wear is exceedingly small—one having been at work upwards of two years, with only three days' stoppage for repairs.

Fig. 2121 represents a modification of the furnace, Fig. 2119. Both of these arrangements were found to work well. The one shown in Fig. 2121 consists in combining the calcining furnace with the smelting furnace, so that the ore falls out of the calciner into the smelter at a red heat—thus saving the labour and nuisance of removal, and the cost of reheating it when put cold into the smelter. In addition to this, the waste heat

2121.

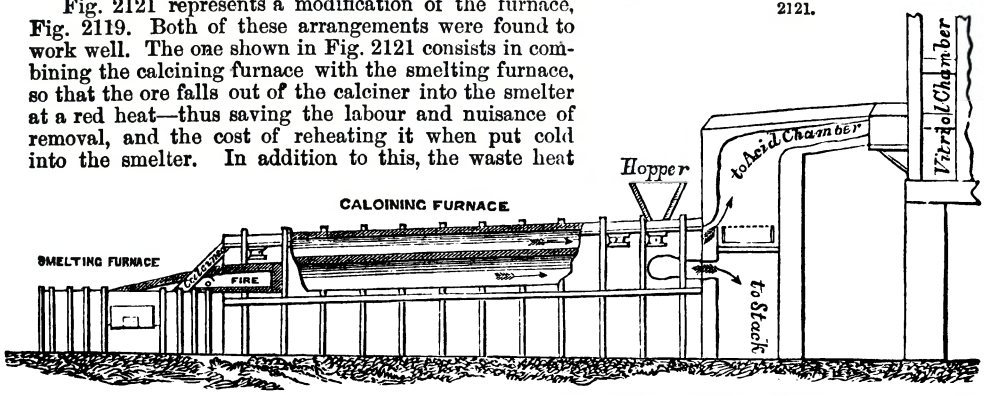

from the smelter, instead of passing direct to the stack, is made to pass under the bed of the calcining furnace, thus saving all the fuel now used in calcining.

Fig. 2122 represents a longitudinal section, and Fig. 2123 a cross-section, of Spence's final arrangement, now (1870) in active operation.

2122.

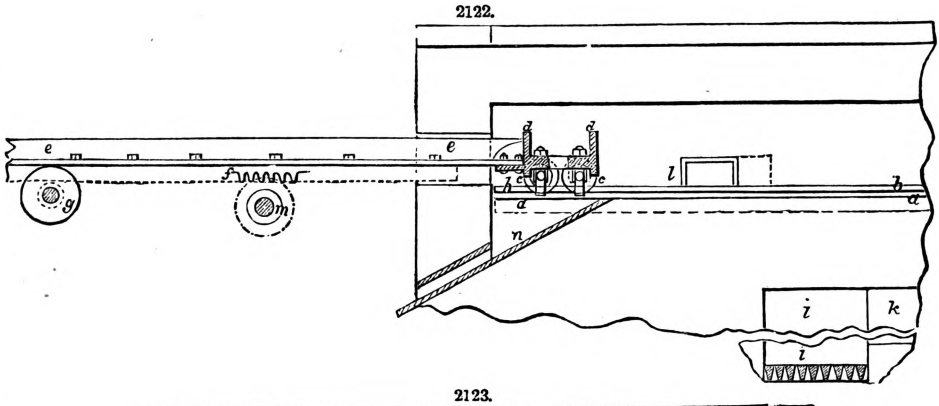

2123.

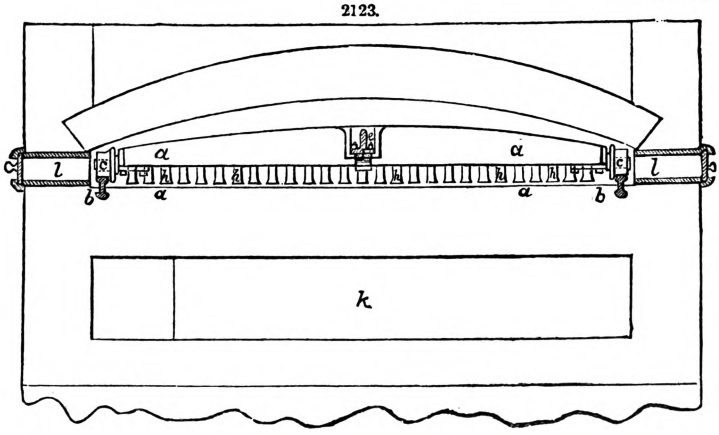

The bed of the furnace is at a, in which are mounted two rails b; upon these rails are wheels c mounted loosely upon axles which are attached to a frame d; to this frame is bolted a bar e carrying

on its under-side a rack *f* and resting upon rollers, one of which is shown at *g*; but there are several placed at intervals, carried by any suitable bearings, the length of the bar *e* being such as not to pass off the innermost of the said rollers when the frame *d* is at the back end of the furnace. The frame *d* carries two rows of instruments *h h*^{1}, which project downward nearly to the bed of the furnace, and the two rows are so placed that an instrument in one row is opposite to a space in another; at Figs. 2124, 2125, they are shown detached, the latter showing their horizontal section, and it will be seen that on one side they are pointed and on the other flat. At *i* is the fire-place, and at *k* the chamber, through which the products of combustion pass, and by means of which the furnace becomes heated. At *l* is one of a series of doors extending at intervals along each side of the furnace. At the front of the furnace is an inclined shute *n*, through which the material passes when calcined.

2124.

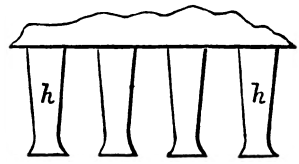

2125.

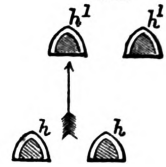

The ore having been first ground, or otherwise brought into a state of fine division, is fed across the furnace through one of the doors at the back thereof, and motion is communicated by means of the shaft and pinion *m* to the rack *f*, whereby the frame *d* will be caused to advance towards the back of the furnace; the instruments *h* moving in the direction of the arrow, Fig. 2125, the pointed parts will therefore advance through the material, and their curved bottoms, seen in Fig. 2124, acting as ploughshares will stir and turn the material over. When the frame has reached the back of the furnace the motion of the shaft *m* is reversed, and the frame *d* with its instruments travels towards the front of the furnace, and the flat parts of the said instruments will now therefore act against the material, a portion of which will be carried forward. The frame *d* and its stirrers is now in a highly-heated state; and in order to allow it to cool, the motion of the shaft *m* is arrested, so that the apparatus may remain stationary for a period, and as it is now over the shute *n* it receives the current of air passing through the same. When the desired cooling has been effected, say in four or five minutes, the shaft *m* is again put in motion and the operations above described are repeated. The charge is repeated at the back end of the furnace about every hour, and it has been found that a charge may be about 1½ cwt. for a furnace 32 ft. long and 6 ft. wide, the speed of the rakes being about two minutes from the front of the furnace to the back and back again; and as the charging continually goes on for each hour, a portion of the material is carried forward each time by the flat part of the rakes, and is ultimately delivered through the shute *n*; but as such portions are continually falling off the rakes they are only carried forward through short spaces at each raking, and they therefore only gradually make their way to the delivery end.

The mechanical means of causing the forward and backward motion of the rakes may be varied to a considerable extent. The means employed will be readily understood by referring to Figs. 2126, 2127, the former being a side view, and the latter a plan of a pair of engines and other parts

2126.

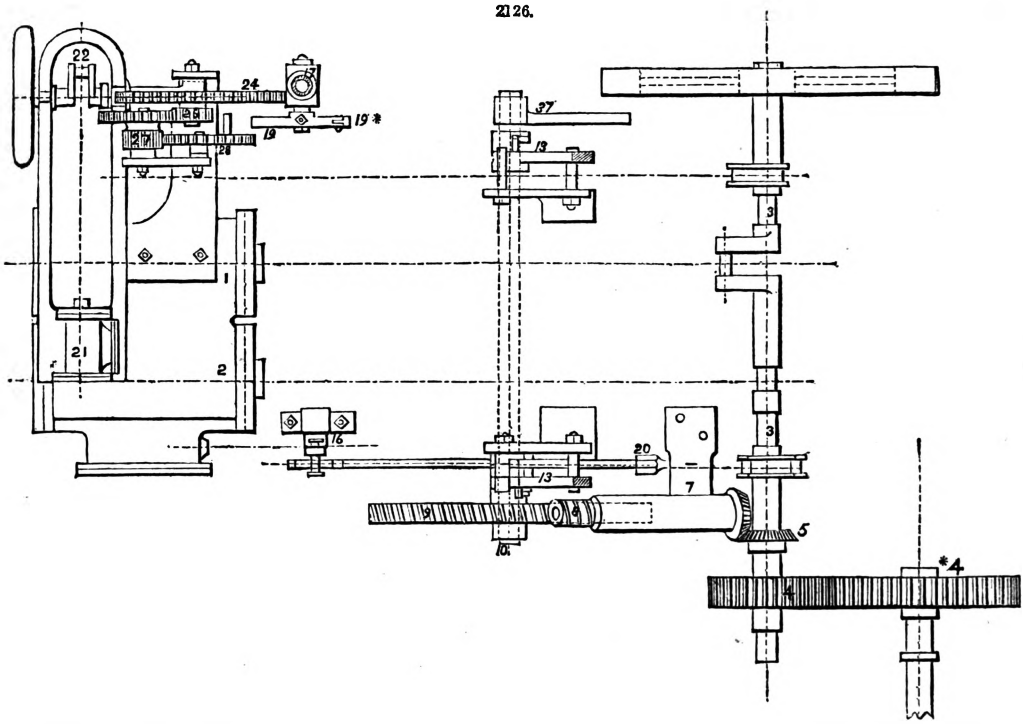

which may be used separately for each furnace, or for two or more. At 1, 2, are two steam-cylinders communicating motion by their piston-rods to the crank-shaft 3, upon which there is a pinion 4 taking into a wheel 4* which is on the shaft *m*, the same as that denoted by the same letter of

reference in Fig. 2122. Upon the crank-shaft 3 is a bevel 5 taking into another 6 upon a shaft mounted in a bearing 7, and this shaft is provided with a worm 8 in gear with a worm-wheel 9

2127.

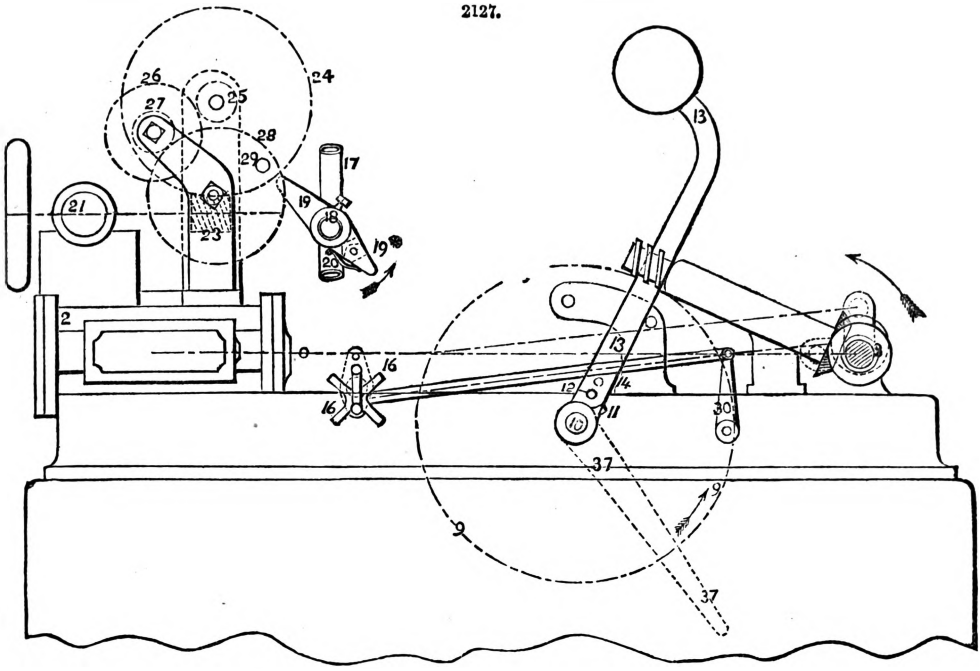

mounted on a shaft 10; on this shaft is a tappet 11, which at intervals, as will be described, arrives in contact with a pin 12 projecting from a lever 13 turning loosely upon the shaft 10, and the said lever 13 also carries another projecting pin 14, situate beneath the ordinary eccentric rod 15, which at its end is connected to the valve-rod by the usual gab-motion 16. The steam-pipe for the cylinders is at 17, provided with a stop-tap 18, upon which is mounted a lever 19, 19*, the end 19* thereof being pressed in the direction of the arrow by a spring 20, and the said end 19* is jointed so as to be capable of turning against the force of the said spring in one direction. Adjoining the steam-cylinders 1, 2, is a supplementary small steam-cylinder 21, the piston of which is constantly going and communicates motion to a crank 22, on the shaft of which is a worm 23 taking into a wheel 24, which then drives the train of clockwork 25, 26, 27, 28, on the last of which there is a projecting pin 29 arriving at certain times in contact with the lever 19. According to the positions of the parts shown, the rakes are proceeding from the front to the back of the furnace, and have nearly reached that position, they having been driven forward by the wheel on the shaft *m*. The tappet 11 will therefore soon arrive in contact with the projecting pin 12, and when that takes place the said lever will be turned over until the weight thereon has passed the vertical line, after which it will fall over and bring the pin 14 to bear against the eccentric rod 15, which, by turning upon the rocking-lever 30, will shift the position of the gab-motion 16, and thus reverse the engines, there being a lever 13, and pins 12, 14, for each of the two driving steam-cylinders; the driving-wheels will now revolve in the contrary direction, and the rakes will travel back towards the front of the furnace, carrying with them, as before described, a portion of the material. When this has been effected, the lever 31 on the shaft 10 (and which is now moving in a direction contrary to the arrow) will arrive in contact with the lever 19*, thereby causing the stop-tap 18 to be turned and the steam to be shut off; the motive power being thus arrested, the rakes will remain at the front and colder end of the furnace a sufficient time to cool, and that period is determined in the following manner;—It has been stated that the small cylinder 21 is constantly supplied with steam, and the train of gearing 23 to 28 is therefore constantly revolving, and the numbers of teeth are so arranged that when the rakes have been allowed to remain stationary a certain time, a pin 29 upon the wheel 28 arrives in contact with the lever 19, thereby turning the stop-tap so as to open it and admit steam to the cylinders 1, 2; when this is done, the tappet 11 will at the same time again arrive against the pins 12, but on the side thereof opposite to that above mentioned; the levers 13 will therefore be turned back into the position shown, thereby removing the pins 14 from the eccentric rods 15, and allowing them to fall, and again reverse the engine, so that the rakes will now be moved to the back of the furnace, and thus the operation continues. When the lever 37 turns back after having shut off the steam, the spring joint of the lever 19* allows it to pass.

Copper and Copper Ores; our ascertained positive knowledge respecting.—Atomic weight = 63; probable molecular weight = 63.

Pure copper is found in a state of nature, but the principal ore of this metal is a double sulphuret of copper and iron. This ore is subjected to the process of roasting, which transforms the sulphuret of iron into oxide of iron and sulphurous anhydrite. The oxide of iron passes off in the scoriæ or slag in the form of fusible silicate. A repetition of the same process completes the

expulsion of the iron. A third roasting gives the copper in its raw state; the sulphuret of copper is, indeed, transformed into sulphurous anhydrite and oxide of copper, and this latter oxide reacts on the sulphuret not yet decomposed, thus producing copper and sulphurous anhydrite.

$$\underset{\text{Subsulphuret of copper.}}{\text{Cu}^2\text{S}} + \underset{\text{Protoxide of copper.}}{2\,\text{Cu}\,\text{O}} = \underset{\text{Copper.}}{4\,\text{Cu}} + \underset{\text{Sulphurous anhydrite.}}{\text{SO}^2}$$

By roasting this raw copper in a silicious furnace, a certain quantity of oxide is formed by which the elimination of the sulphur is completed, and at the same time the oxides of the foreign metals, uniting with the silex of the furnace and forming silicates, pass away in the scoriæ.

To free the copper from all oxide, it is melted, carbon is placed on its surface, and the mass stirred with green wood. The carbonated gases evolved from the wood by the action of heat are sufficient to reduce the oxide of copper in the metallic mass. These two latter are called refining processes.

2128.

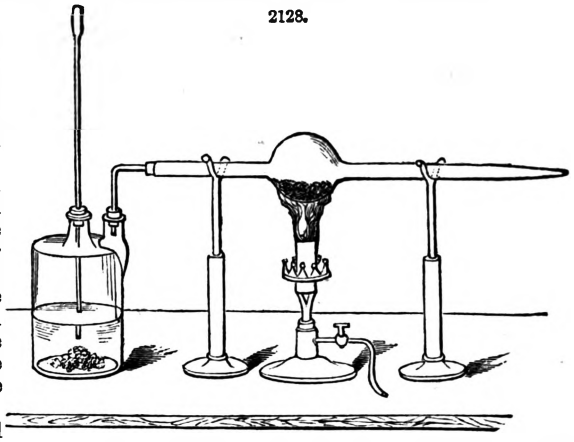

Copper may be chemically obtained by reducing the oxide of this metal with hydrogen. For this purpose, pure oxide of copper is placed in a globular chamber blown in the middle of a glass tube, Fig. 2128; one end of this tube is made to communicate with an apparatus in which hydrogen is produced, through the medium of a desiccating tube, and the other end communicates freely with the atmosphere.

When the hydrogen has passed through during a time sufficiently long to ensure the expulsion of all the air, a precaution necessary to avoid an explosion, the oxide of copper is heated by means of a spirit-lamp; water is thus formed and the copper is liberated.

$$\underset{\text{Oxide of copper.}}{\text{Cu}''\text{O}} + \underset{\text{Hydrogen.}}{\left.\begin{matrix}\text{H}\\\text{H}\end{matrix}\right\}} = \underset{\text{Water.}}{\left.\begin{matrix}\text{H}\\\text{H}\end{matrix}\right\}\text{O}} + \underset{\text{Copper.}}{\text{Cu}''}$$

The process is complete when no more steam can be evolved.

Copper is of a red colour; it is sufficiently malleable to allow of being beaten out into transparent sheets; it is also very ductile and very tenacious.

It may be obtained artificially crystallized in cubes, and it is under this form that it is found in nature. The density of this metal is 8·85.

Copper, on being rubbed, emits a disagreeable odour. It melts at about 778° C. It does not become oxidized in dry air at an ordinary temperature; in a high temperature it becomes oxidized without incandescence. When exposed to damp air, it becomes covered with a layer of hydrated carbonate of copper (verdigris), but this layer preserves the metal from further change.

Azotic acid affects copper when cold, and sulphuric acid when heated. In the former case are produced bioxide of azote and azotate of copper; in the latter case, sulphate of copper and sulphurous anhydrite.

$$1.\quad 8\left(\left.\begin{matrix}\text{Az}\,\text{O}^2\\\text{H}\end{matrix}\right\}\text{O}\right) + 3\,\text{Cu}'' = 3\left[\left.\begin{matrix}(\text{Az}\,\text{O}^2)^2\\\text{Cu}''\end{matrix}\right\}\text{O}^2\right] + 4\left(\left.\begin{matrix}\text{H}\\\text{H}\end{matrix}\right\}\text{O}\right) + 2\,\text{Az}\,\text{O}$$

Azotic acid. Copper. Azotite of copper. Water. Bioxide of azote.

$$2.\quad 2\left(\left.\begin{matrix}\text{SO}^{2''}\\\text{H}^2\end{matrix}\right\}\text{O}^2\right) + \text{Cu}'' = \left.\begin{matrix}\text{SO}^{2''}\\\text{Cu}''\end{matrix}\right\}\text{O}^2 + 2\left(\left.\begin{matrix}\text{H}\\\text{H}\end{matrix}\right\}\text{O}\right) + \text{SO}^2$$

Sulphuric acid. Copper. Sulphate of copper. Water. Sulphurous anhydrite.

In the presence of acids, copper readily absorbs the oxygen of the atmosphere; it also becomes oxidized in the presence of ammonia, and is dissolved, producing a beautiful blue liquid.

Copper, previously heated, burns in chlorine, producing bichloride of copper. It combines directly with sulphur, phosphorus, arsenic, bromine, and most of the metals.

Copper forms two series of compounds. Being diatomic, it combines directly with two monoatomic radicals, or with a diatomic radical like itself, and so becomes saturated. Thence we have a series of compounds which have received the name of maximum. These are;—

Bichloride of copper	$\text{Cu}''\,\text{Cl}^2$	Protoxide of copper	$\text{Cu}''\,\text{O}$
Bibromide of copper	$\text{Cu}''\,\text{Br}^2$	Hydrite of copper	$\text{Cu}''\,(\text{O}\,\text{H})^2$
Bifluoride of copper	$\text{Cu}''\,\text{Fl}^2$	Protosulphuret of copper ..	$\text{Cu}''\,\text{S}$

and the various oxygenated salts resulting from the substitution of radicals of acids for the hydrogen of the hydrite of copper.

By reason of the diatomic nature of copper, two atoms of this metal may unite, exchanging only a single atom between each other, and form the diatomic group Cu'', as shown in the following figure;—

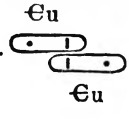

$= (\text{Cu}^2)''$.

The group Cu^2 being diatomic, may combine quite as well as the atom Cu with chlorine, bromine, iodine, and so on; and as the combinations formed by it offer sufficient stability, we have a second series of compounds of copper, known by the name of minimum, and in which, instead of the single atom Cu″, appears the group Cu^2. These are;—

Protochloride .. .. Cu^2Cl^2	Protofluoride .. .. Cu^2Fl^2
Protobromide .. .. Cu^2Br^2	Suboxide .. .. Cu^2O
Protoiodide .. .. Cu^2I^2	Subsulphuret .. .. Cu^2S

and the very unstable protosalts resulting from the substitution of the diatomic group Cu^2 for an even number of atoms of the hydrogen typical of the acids.

Besides these two series of compounds, copper forms with oxygen a bioxide CuO^2, and an acid the composition of which has not yet been exactly determined.

The diatomic nature of oxygen explains how several atoms of this body can unite with a single atom of copper: two atoms of oxygen may exchange each one atom with the copper and one between each other, as we see by the aid of the diagram.

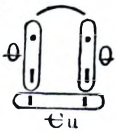

We will consider more particularly bichloride, protosulphuret, protoxide, hydrate, sulphate, azotite, and the carbonates.

Bichloride of Copper, $Cu''\{^{Cl}_{Cl}$.—This compound is formed by the direct action of chlorine upon copper; it is also produced by dissolving the protoxide of this metal in chlorhydric acid.

$$Cu'' + \left.\begin{matrix}Cl\\Cl\end{matrix}\right\} = Cu''\left\{\begin{matrix}Cl\\Cl\end{matrix}\right.$$

Copper. Chlorine. Bichloride of copper.

$$Cu''O + 2\left(\left.\begin{matrix}H\\Cl\end{matrix}\right\}\right) = \left.\begin{matrix}H\\H\end{matrix}\right\}O + Cu''\left\}\begin{matrix}Cl\\Cl\end{matrix}\right.$$

Protoxide of copper. Chlorhydric acid. Water. Bichloride of copper.

Bichloride of copper is soluble in water and in alcohol; its watery solution, concentrated when hot, deposits while cooling hydrated crystals, the formula of which is $Cu''Cl^2 + 2\,aq$. These crystals are in shape like long needles of a greenish-blue colour. The alcoholic solution of this salt burns with a bright green flame.

Protosulphuret of Copper, Cu″S.—This substance does not exist alone in nature; it is obtained by sending a current of sulphurated hydrogen through the watery solution of a salt of copper, bichloride, for instance;—

$$Cu''\left\{\begin{matrix}Cl\\Cl\end{matrix}\right. + \left.\begin{matrix}H\\H\end{matrix}\right\}S = 2\left(\left.\begin{matrix}H\\Cl\end{matrix}\right\}\right) + Cu''S$$

Bichloride of copper. Sulphydric acid. Chlorhydric acid. Sulphuret of copper.

It is precipitated under the form of a black mass, which converts itself into sulphate when exposed to the air, by attracting the oxygen.

$$Cu''S + 2\left(\left.\begin{matrix}O\\O\end{matrix}\right\}\right) = \left.\begin{matrix}SO^{2''}\\Cu\end{matrix}\right\}O^2$$

Protosulphuret of copper. Oxygen. Sulphate of copper, maximum.

Protosulphuret of copper loses half of its sulphur by being heated, and is transformed into subsulphuret.

$$4Cu''S = 2Cu^2S + \left.\begin{matrix}S\\S\end{matrix}\right\}$$

Protosulphuret of copper. Subsulphuret of copper. Sulphur.

Protoxide of Copper, CuO.—This oxide may be obtained; 1, by heating copper exposed to the air, when a layer of oxide easily detached is formed on the surface of the metal; 2, by calcining azotite of copper; 3, by heating hydrate of copper; to dishydrate this latter substance, it is sufficient to boil it with water.

Whatever process of preparation may be employed, with slight differences in the physical properties of the oxide, which may be more or less compact, this compound possesses the following properties;—

It is a black and amorphous powder, capable of supporting a very high temperature without being decomposed or melted. When, however, it is heated in too high a degree, the mass becomes a solid block, extremely hard, and, when pounded, of a yellowish colour. This oxide appears to be in a particular allotropic state. M. Kieben has noticed that it then possesses the faculty of agglomerating at a lower temperature than when it has not been overheated. It loses this property when it has been heated several times at a temperature insufficient to cause it to agglomerate, and then allowed to cool.

Protoxide of copper is a basic anhydrite. It is much used in laboratories, where it is employed in making organic analyses.

Hydrate of Copper, $\left.\begin{matrix}Cu''\\H^2\end{matrix}\right\}O^2$.—This hydrate is obtained by precipitating the solution of bichloride, sulphate, or any other maximum salt of copper by an alkaline base. The precipitate so formed must be well washed and dried in an ordinary temperature; it is of a dirty blue colour.

If the liquid in which it is precipitated is made to boil, it loses water, and is so transformed into anhydrous oxide; *a fortiori*, it will be dishydrated when heated by the fire directly.

$$\left.\begin{matrix}\text{Ꞓu}''\\ \text{H}^2\end{matrix}\right\}\text{Θ}^2 = \left.\begin{matrix}\text{H}\\ \text{H}\end{matrix}\right\}\text{Θ} + \text{Ꞓu}''\,\text{Θ}$$

Hydrate of copper. Water. Protoxide of copper.

Hydrate of copper is dissolved in ammonia, when it becomes of a beautiful blue colour.

Sulphate of Copper, maximum, $\left.\begin{matrix}\text{S}\,\text{Θ}^{2''}\\ \text{Ꞓu}''\end{matrix}\right\}\text{Θ}^2$.—In laboratories this substance is prepared by applying concentrated sulphuric acid to the copper when hot.

$$\text{Ꞓu}'' + 2\left(\left.\begin{matrix}\text{S}\,\text{Θ}^{2''}\\ \text{H}^2\end{matrix}\right\}\text{Θ}^2\right) = \left.\begin{matrix}\text{S}\,\text{Θ}^{2''}\\ \text{Ꞓu}''\end{matrix}\right\}\text{Θ}^2 + 2\left(\left.\begin{matrix}\text{H}\\ \text{H}\end{matrix}\right\}\text{Θ}\right) + \text{S}\,\text{Θ}^2$$

Copper. Sulphuric acid. Sulphate of copper. Water. Sulphurous anhydrite.

The residue of the preparation of sulphurous anhydrite is utilized for this purpose. In the arts, sulphuret of copper is heated while exposed to the air. This substance absorbs the oxygen of the air, and is transformed into sulphate, which may be separated from the ore that has not been subjected to washing and evaporation.

The sulphate of copper of commerce nearly always contains sulphate or iron; the surest means of obtaining this salt free from iron is to dissolve it in water, and to precipitate by sulphurated hydrogen its solution previously acidulated. The copper is precipitated alone; the precipitate—well washed and exposed to the simultaneous contact of air and water—is transformed into sulphate, which is crystallized after having filtered the solution. Sulphate of copper is known in commerce under the name of blue vitriol. It is insoluble in alcohol, and soluble in water; it crystallizes in this latter liquid in blue oblique parallelopipeds. These crystals are hydrated, and are represented by the formula $\left.\begin{matrix}\text{S}\,\text{Θ}^{2''}\\ \text{Ꞓu}''\end{matrix}\right\}\text{Θ}^2 + 5\,\text{aq}$.

When hydrated sulphate of copper is heated to 110° C., it loses 4 aq; at 248° C. it loses the water it contains, and becomes anhydrous. It is then a white powder like flour. As the smallest quantity of water gives it its blue tint, this substance furnishes a test of the presence of water.

The crystals of sulphate of copper are isomorphous with those of sulphate of magnesium, zinc, or cadmium, when these latter contain, as it does, five moleculæ of water. This salt forms double sulphates with alkaline sulphates. It combines with the sulphates of magnesium, zinc, iron at a minimum, &c., producing crystals which contain five moleculæ of water, when the copper is predominant, and seven when the other metal predominates. These crystals are always isomorphous with each other when they contain the same quantity of water.

When heated to a high degree, sulphate of copper decomposes itself into oxygen, sulphurous anhydrite, and protoxide of copper.

If the solution of this salt is precipitated by a quantity of an insufficient base, an insoluble basic sulphate is produced of a green colour.

When sufficient ammonia is added to a solution of sulphate of copper to dissolve the precipitate which is first formed, and alcohol is poured into the blue liquid so produced, a precipitate of a beautiful blue colour is obtained, known as ammoniacal sulphate of copper, the composition of which is $\left.\begin{matrix}\text{S}\,\text{Θ}^{2''}\\ \text{Ꞓu}''\end{matrix}\right\}\text{Θ}^2, 6\,\text{Az}\,\text{H}^5 + \text{H}^2\,\text{Θ}$.

Azotite of Copper, $\text{Ꞓu}''\left\{\begin{matrix}\text{Θ}\,\text{Az}\,\text{Θ}^2\\ \text{Θ}\,\text{Az}\,\text{Θ}^2\end{matrix}\right.$.—Azotite of copper is prepared by dissolving the metal in azotic acid, evaporating the liquid, and leaving to cool. The salt is deposited while cooling in large blue hydrated crystals; these crystals, when heated, first melt in their crystallized water, then this water is evaporated, and the anhydrous azotite is decomposed; at first there is formed a green basic azotite, afterwards the decomposition becomes more and more complete, and finally there remains a residue of oxide of copper.

Carbonates of Copper.—The carbonate obtained by pouring carbonate of sodium into a solution of sulphate of copper is a carbonate of copper containing two parts of this metal, and bibasic. Its formula is

$$\left.\begin{matrix}\text{Ꞓu}''\left\{\begin{matrix}\text{Θ}\,\text{H}\\ \text{Θ}\end{matrix}\right.\\ \text{Ꞓu}''\left\{\begin{matrix}\text{Θ}\\ \text{Θ}\,\text{H}\end{matrix}\right.\end{matrix}\right\}\text{Ꞓ}\,\text{Θ}'' = \left.\begin{matrix}(\text{Ꞓu}'')^2\\ \text{Ꞓ}\,\text{Θ}''\\ \text{H}^2\end{matrix}\right\}\text{Θ}^4.$$

This substance has the same composition as the natural carbonate known by the name of malachite. Malachite is of a beautiful green colour; in places where it abounds, it is used as copper ore, and, indeed, it is an excellent ore.

There is also found in a natural state a hydrated carbonate of copper containing three parts of this metal; it is of a beautiful blue colour, and is known under the name of mountain blue, or azurite.

The verdigris which is formed upon the surface of copper is a hydrated carbonate of copper; this verdigris must not be confounded with the verdigris of commerce, which is a subacetate of copper.

Protochloride of Copper, $\text{Ꞓu}^2\,\text{Cl}^2$.—The most simple means of preparing this substance is to dissolve metallic copper in aqua regalis containing very little azotic acid, and to add some water to the solution; the protochloride of copper is precipitated under the form of a white crystalline powder.

Another way of preparing this compound is to dissolve suboxide of copper in boiling hydrochloric acid, and then to allow the liquid to cool, in the midst of which will be deposited the little colourless tetrahedrons of protochloride of copper.

It may also be obtained by heating perchloride of copper, which thus loses half its chlorine.

$$\underset{\text{Chloride of copper maximum.}}{2\,Cu\,Cl^2} = \underset{\text{Chlorine.}}{\left.\begin{matrix}Cl\\Cl\end{matrix}\right\}} + \underset{\text{Chloride of copper minimum.}}{Cu^2\,Cl^2}$$

Chloride of copper minimum is a white substance hardly soluble in water, but soluble in hydrochloric acid and ammonia; it turns green when exposed to the air by absorbing oxygen and transforming itself into oxychloride, $Cu^2\,Cl^2$. It also absorbs oxide of carbon, but it gives up this gas when its solution is made to boil. In an ammoniacal solution it gives, with the gaseous carburets of hydrogen of the series $C^n\,H^{2n-2}$, explosible precipitates which, heated with hydrochloric acid, give out the hydrocarburet the elements of which it contains. This property has been utilized in organic chemistry.

Subsulphuret of Copper, Cu^2S.—Subsulphuret of copper is found in a natural state under the form of beautiful crystals, belonging to the cubic system. They are of a black colour and sufficiently soft to be cut with a knife, and they melt in the flame of a candle. Their density is 5·0.

This substance is prepared artificially by calcining copper with an excess of sulphur; the excess of sulphur is evaporated during the process of calcination. To ensure the whole of the copper being acted upon, the product of this first operation is crushed and calcined a second time with sulphur.

When heated in the air, it gives a sulphate of copper, if the temperature is not too high; if not, it is transformed into oxide of copper and sulphurous anhydrite, by absorbing oxygen. Heated with oxide of copper, this sulphuret gives out sulphurous anhydrite, leaving a residue of metallic copper.

$$\underset{\text{Subsulphuret of copper.}}{Cu^2} + \underset{\text{Protoxide of copper.}}{2\,Cu\,O} = \underset{\text{Copper.}}{4\,Cu} + \underset{\text{Sulphurous anhydrite.}}{S\,O^2}$$

Suboxide of Copper, $Cu^2\,O$.—This substance is found in a natural state. It is sometimes found in compact masses, and sometimes in octahedric crystals of a red colour; it may be obtained artificially in the form of a red powder, and in various ways.

If acetate of copper be boiled with glucine, a red crystalline powder is precipitated, which is suboxide of copper.

In the arts, this substance is commonly prepared by calcining a mixture of;—

	Parts.
Sulphate of copper	100
Dry carbonate of sodium	28
Copper filings	25

The produce of this operation must be well washed.

Suboxide of copper melts without undergoing change when heated unexposed to the air; when heated in the air it is transformed into protoxide.

Hydrochloric acid converts it into protochloride; this oxide is, therefore, a basic anhydrite.

Azotic acid gives up its oxygen to it, and causes it to pass into the state of a maximum azotate; strong acids decompose it into metallic copper and bioxide of copper, which, when in contact with these acids, gives a salt of copper;—

$$\underset{\text{Oxide of copper.}}{Cu^2\,O} + \underset{\text{Sulphuric acid.}}{\left.\begin{matrix}S\,O^{2''}\\H^2\end{matrix}\right\}O^2} = \underset{\text{Copper.}}{Cu''} + \underset{\text{Sulphate of copper.}}{\left.\begin{matrix}S\,O^{2''}\\Cu''\end{matrix}\right\}O^2} + \underset{\text{Water.}}{\left.\begin{matrix}H\\H\end{matrix}\right\}O}$$

Ammonia dissolves this oxide without being discoloured; but the solution becomes blue by absorbing oxygen when exposed to the air.

Distinctive Properties of Salts of Copper.—Salts of copper are recognized in analyses by the following properties;—

1. A sheet of iron becomes covered with a perfectly-adhering layer of copper, when dipped into the saline solutions of this metal.

2. Hydrosulphuric acid causes in these solutions a precipitate insoluble in alkaline sulphurets; this precipitate is not produced in the presence of cyanide of potassium.

The maximum salts may be distinguished from the minimum;—

1. Potassium gives with the minimum salts a yellow precipitate insoluble in an excess of reactive, the maximum salts are precipitated by the same reactive, a dirty blue colour, and the precipitate becomes black on being boiled, if sufficient quantity of potassium has been added to wholly decompose the salt of copper.

2. Ammonia produces in the maximum and the minimum salts a precipitate soluble in an excess of reactive; but with the maximum salts the ammoniacal solution is of a beautiful blue colour, whilst with the minimum salts this solution is colourless and becomes blue only on contact with the air.

All the salts of copper are poisonous. The best means of counteracting this poison if accidentally swallowed is to take some white of egg, while waiting for an emetic. The albumine of the egg forms with the copper a compound almost insoluble, and by this means the absorption of the metal is prevented.

It has been proposed to substitute iron dust for albumine, which dust precipitates the copper in a metallic state, or sulphuret of iron, which will produce sulphuret of copper.

Figs. 2129 to 2131 are of the furnace, invented by Alfred Jenkin, of Zell, for the reduction and calcination of copper and lead ores.

2129.

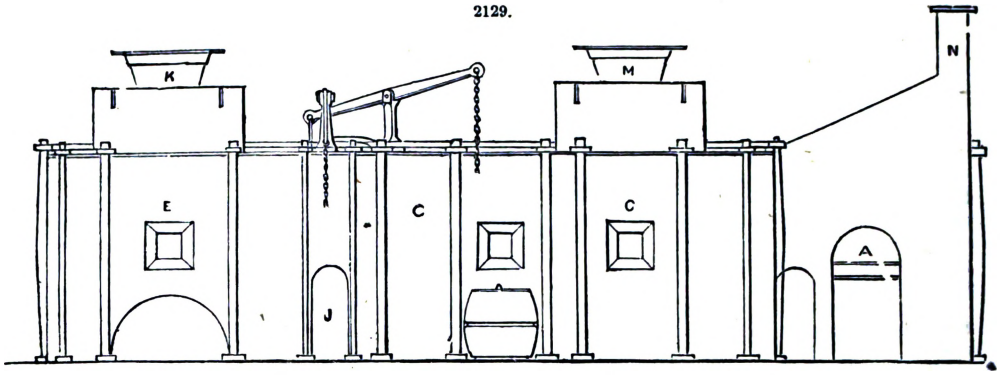

2130.

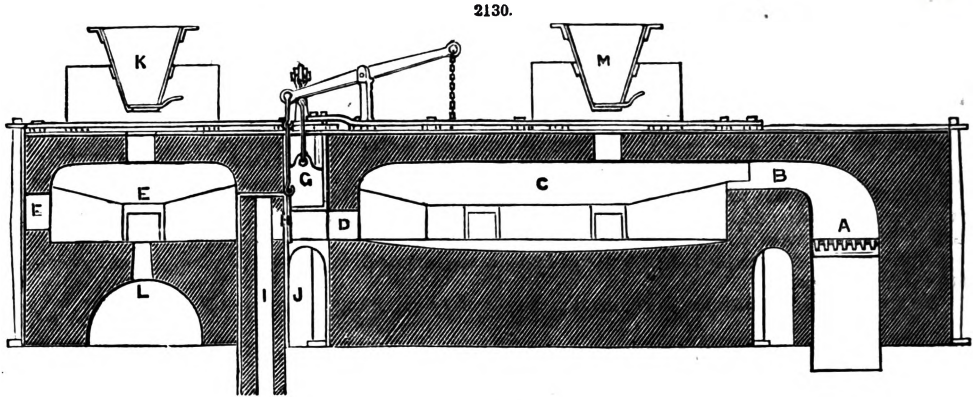

2131.

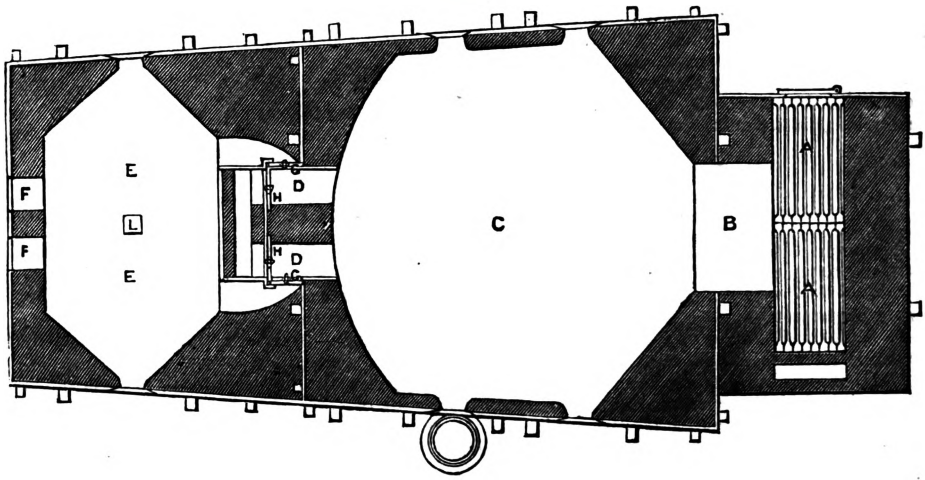

This invention relates to a peculiar construction and arrangement of a double reverberatory furnace, to be employed in the reduction and calcination of copper and lead ores, whereby a great economy of fuel is effected. The principal feature in this improved furnace is, that one ordinary fire answers the double purpose of reducing and calcining the ore. The fire is contained in an ordinary fire-place, situated at one end of the double furnace.

The heat and flame from this fire pass through a lateral opening or flue into the reducing or flowing furnace, and after passing over the surface of the ore contained therein, it enters by another opening or openings into the calcining furnace, which is placed on the same level, or nearly so, with the flowing furnace. From the calcining furnace the heat passes off by a suitable flue or flues to the chimney. In the passage or passages which conduct from the flowing furnace to the calcining furnace there are placed suitable doors or dampers, which are so arranged that, by opening or closing certain of these doors or dampers, the heat and flame may either be directed into the

calcining furnace, or be entirely shut off from such furnace and be directed into a waste flue, which passes downwards to an underground flue communicating with the chimney. An air or a ventilating space is left between the calcining and flowing furnaces, for the purpose of preventing the bed of the latter furnace from becoming overheated, when the flame and heat are diverted down the waste or escape flue or flues, which flue or flues are formed in that side of the ventilating air-space farthest from the flowing furnace; so that, whether the calcining furnace be in operation or not, the bed of the flowing furnace will always remain at about the same temperature.

Fig. 2129 represents an exterior elevation of Jenkin's improved arrangement of a reducing and calcining furnace; Fig. 2130 is a longitudinal transverse section; and Fig. 2131 an horizontal section. A is the ordinary fire-place, the heat and flame from which pass through the lateral opening or flue B into the flowing furnace C, and after traversing over the surface of the ore contained therein enter by the passages D into the calcining furnace E, which is upon the same level with the floor of the flowing furnace. F are passages leading off to the main draught flue or chimney. When it is required to shut off the heat and flame from the calcining furnace, the two dampers G are closed, and the pair of dampers H are elevated, thereby shutting off the flow from the passages D, and diverting it into the descending or waste flue I, which conducts it underground to the main flue. An air or a ventilating space J is left between the flowing and calcining furnace, in order to prevent the latter from becoming overheated. The ore to be calcined is fed into the calcining furnace by the hopper K, and is removed when calcined through the aperture L in the bottom of the furnace. The flowing or reducing furnace is also provided with a similar hopper M, to supply the calcined ore to the flowing or reducing furnace. The small chimney N serves to carry off any dust or ashes arising from the fire when fresh fuel is supplied, or when the fire is otherwise agitated.

William Longmaid in 1842 proposed a method of treating ores. This method related to the treating of such descriptions of ores and minerals as contain sulphur; and had for its object the removal of the sulphur from such ores and minerals, in order to render the subsequent operations to which such ores are subjected more advantageous in obtaining products therefrom. Writing in 1842, Longmaid observes,—"I have discovered, after much experiment, that the use of common salt can only be generally and practically useful as a manufacture when the quantity of salt applied in respect to the ore or mineral treated considerably exceeds the quantity of sulphur contained in the ore or mineral. And I have found that when treating ores according to my plan with common salt, I obtain metallic oxides in a condition fit for metallurgical purposes; and by such means I am enabled more advantageously to obtain the metallic products of the ores treated than when operating on similar ores according to the means now practised, and with one great advantage, that in so treating ores and minerals containing sulphur, I take up the larger portion of the sulphur so contained in the ores or minerals, and convert common salt into sulphate of soda. Hence it will be understood that my invention consists of treating ores and minerals containing sulphur with such proportions of common salt that the ores are deprived of their sulphur, or nearly so; and the metallic products resulting from such process are rendered more suitable for subsequent processes for obtaining the metals therefrom, and at the same time the act of so treating the ores and the minerals will produce much larger quantities of sulphate of soda than has heretofore been obtained.

"I have found that any ore containing 15 to 20 per cent. of sulphur, and in some cases even less, may be usefully operated on according to my invention; and the treatment according to my invention may be usefully applied either before or after the ores have undergone any process of heat, provided a quantity of sulphur remains equal to the percentage above mentioned. The ores and minerals to be treated according to my invention are those containing sulphur, particularly mundics, or iron pyrites, copper ores, lead ores, tin ores, zinc ores; mundics, or iron pyrites, containing sulphur combined with copper or tin, or with both; copper ores, containing sulphur combined with iron or tin, or with both; lead ores, containing sulphur combined with copper; and tin ores containing sulphur combined with copper or iron, or with both. The process of treatment, according to my invention, is to be carried on in suitable furnaces. The one which I prefer is a reverberatory furnace, having four beds, each succeeding bed being on a somewhat higher level in proceeding from the fire towards the end of the furnace. At the same time I do not confine myself thereto, as the furnace employed may be varied without departing from my invention; and the ore or mineral, with salt, are to be introduced on the bed of the furnace most distant from the fire, in order that the sulphur given off at comparatively low temperature may be taken up by the salt; and as the ores operated on progressively require more heat to separate the sulphur, they will progressively be brought on to a hotter bed of the furnace.

"Figs. 2132, 2133, show a longitudinal section and plan of a furnace such as I prefer to use in carrying out my invention, and which I prefer to make about 60 ft. long, and 10 ft. from back to front in the clear, having several openings to allow of the matters under process being turned or stirred from time to time; and I find that the occasional admission of steam to the charge nearest the fire is attended with beneficial effects, promoting the oxidation of the minerals and the evolution of the muriatic acid, but this addition is not absolutely necessary."

Description of the Process.—It is better that the ores should be crushed so as to pass through a sieve of four or more holes to the inch, though this is not always necessary. The salt should be dried previous to mixing with the mundics or other sulphur ores, by placing over a flue, so as to obtain the benefit of the otherwise waste heat. The object of this drying is to prevent its caking in the furnace. The quantity of sulphur contained in the ore having been ascertained by the analysis of a carefully-prepared sample, a given quantity of salt, say 1 ton, having been weighed out, a quantity of ore containing sulphur required for the conversion of the salt into salt cake should be added and intimately mixed. The quantity of sulphur required to convert a ton of salt into salt cake is, by calculation, about 5 cwt. 1 qr. 11 lbs.; but as all the sulphur cannot be taken by the salt, it is proper to have the sulphur in excess above that quantity. And although a beneficial working may be obtained by employing a much less quantity of salt in respect of the sulphur contained, yet

Longmaid found that in all cases the common salt should considerably exceed the known weight of sulphur contained in the ore or mineral under process. The mixture of about $\frac{2}{3}$ of the ore required for the salt used should be put upon the upper bed of the furnace, that is, the bed farthest removed

2132.

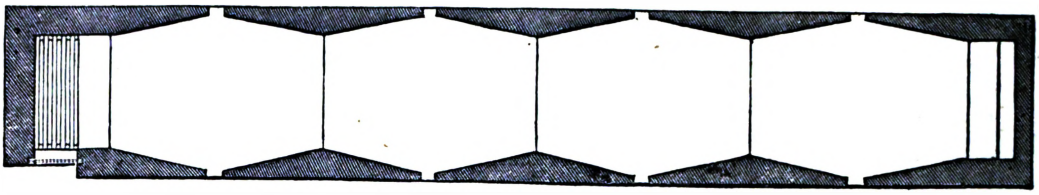

2133.

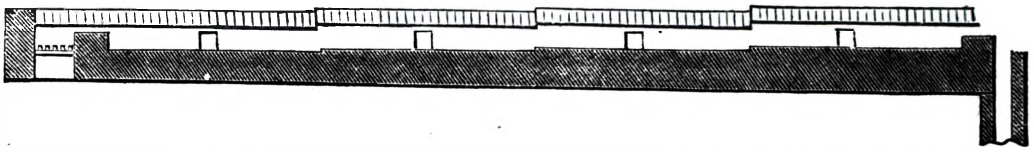

from the fire, and left until heated throughout. It should then be turned over from time to time, so as to allow of the successive contact of the mixture with the atmospheric air passing through the furnace. At about equal intervals and at several times during the time the mixture remains on the upper bed, the remaining quantity of ore should be added. By these means the rapidity and effectiveness of the operation is promoted, and some saving of fuel is produced. It is impossible to fix the exact quantity of ore required, as it must vary according to the quantity of sulphur contained in the ore employed, and depending, in some degree, on the nature of the substances associated with it. The less arsenic contained in the ore the better, although its presence is not an insurmountable objection, especially if associated with a small percentage of copper. A charge being drawn about every twenty-four hours from the front bed, each one of the three remaining charges will then be moved forward to the next lower bed, and a fresh charge put into the upper bed, each one of the charges being kept regularly raked in its turn. A brisk fire is to be kept up in the furnace during the whole time, and a damper is applied to the chimney to obtain regulation. As the decomposition of the salt and ore proceeds, the mixture is gradually fitted to bear the increase of temperature obtained by removal from the upper to the next lower bed, and so on, approaching the fire. The operation appears to proceed best when on the bed nearest the fire it has been brought to a semi-pasty condition, or when the mass has a tendency to agglomerate, and seems to be moist on the surface. By the increase of temperature to which it is here exposed, the charge soon begins to dry up, so that it is eventually drawn in a granular condition. The sulphate ash obtained contains sulphate of soda or salt cake, the chloride of sodium, oxides of iron, a soluble salt of copper, and oxide of tin, if any tin was present in the ore employed, provided the ores be mundic; and, if other ores are used, other products will be obtained. The ash being lixiviated with water, affords a solution containing the sulphate of soda, chloride of sodium, and salt of copper, the insoluble residue containing the oxides of iron and tin. If oxide of tin be contained in the ore employed, it may be separated from the residual matters by washing, the greater specific gravity of the oxide of tin rendering the separation comparatively easy. The copper may be separated from the solution, either with iron, as is well understood, or, as Longmaid prefers, by the addition of lime slacked in water, forming a milk of lime. Iron precipitates the copper in a metallic form; but the lime precipitates it as an oxide, associated with the slight excess of lime necessarily employed, and some small portion of sulphate of lime. This precipitate, by filtration, having been separated from the refined liquor, should be well washed, in order to the complete separation of sulphate of soda and chloride of sodium, the liquors obtained being employed in the lixiviation of fresh sulphate ash. This precipitate is bulky; but, by filtration and drying, its volume is very much diminished, and it is then obtained in a condition fit for reduction to the metallic state by the usual metallurgical process. The solution from which the copper has been separated may, if required, be concentrated by boiling, and set aside to crystallize in suitable vessels, very fine crystals of the sulphate of soda being obtainable. The mother liquor may be again concentrated and set aside to crystallize, or, if required, be employed for the manufacture of alkali by mixture with fresh lime in quantities bearing the proper proportions observed in the manufacture of black ash. If the salt cake be required only for the manufacture of alkali, the solutions obtained by lixiviation should be run off into a large tank, from which the quantity of liquor containing the desired quantity of salt cake may be run on its equivalent of newly-burnt lime, previously weighed out, by which means the water of solution is either solidified or expelled by the heat evolved in the course of the slacking. But should the solution be so weak that the heat evolved from the requisite quantity of lime would not be sufficient to expel the whole of the water, the lime, after being treated with sufficient of the liquor for slacking and converting into a very thick pasty condition, resembling a tough mortar, might be thrown either upon a flue at the end of a black ash furnace, by means of which the benefit of spare heat may be obtained, or upon the third bed of a black ash furnace, where, as evaporation proceeds, the remainder of the liquor required may be gradually added. By these means a more perfect mixture of the salt cake, with its equivalent of lime, is obtained than is the case by the usual process of mixing only the slacked lime and the dry

sulphate of soda or salt cake in powder. The mixture of sulphate of soda and lime treated with its requirements of carbonaceous matter previous to turning down to the lower bed of the black ash furnace is in the usual condition in which it is employed.

Longmaid, in 1844, stated that the great object of his method of 1842 was to obtain sulphate of soda, the metals obtained being considered a beneficial addition resulting from the process. But he afterwards observed that there were circumstances under which, and situations where, ores containing copper, tin, and zinc, with sulphur, may with advantage be treated with common salt for obtaining the metallic parts, without depending mainly on the profits derivable from the sulphate of soda. Longmaid's process of 1844 consists of an improvement in the manufacture of copper, tin, and zinc, by causing ores containing those metals to be treated with common salt below the relative quantities which he specified in 1842. In 1844 Longmaid stated that the more nearly the quantity of salt approaches sixty by weight to every forty by weight of the sulphur ascertained to be contained in the ores to be treated containing copper, tin, and zinc, the more effectually will the metallic portions of the copper and zinc become soluble in water; though the quantity of common salt may be reduced very considerably below sixty to forty of sulphur, and yet obtain very beneficial effects, particularly where the cost of common salt is comparatively great, and there is no ready sale for sulphate of soda at a price that will repay the manufacturer for using a larger proportion of common salt.

The salt to be used should be well dried, and the ores containing copper, tin, or zinc, with sulphur, to be broken to powder; and having ascertained the quantity of sulphur contained in any quantity of ore about to be treated, mix therewith a quantity of salt suitable for obtaining the metallic parts of the copper and zinc in such a state as to become readily soluble in water, using more salt when the cost thereof, coupled with the selling price and demand for sulphate of soda, do not restrict; but below the rate of sixty by weight of common salt to forty by weight of the ascertained quantity of sulphur, the object of this process being to obtain the metallic parts of the ore separate, without materially, and in some cases not at all, depending on the value of the sulphate of soda resulting from the process, this invention being useful only in those cases where the manufacturer, from local or other causes, does not desire to produce a quantity of sulphate of soda so large as would result from the sulphur contained in an ore if common salt were used in the manner described by Longmaid in 1842. The ore containing copper, tin, or zinc, mixed with the salt, is to be placed into a *suitable* furnace, similar to that to which Figs. 2132, 2133, appertain. The ore and salt mixed together are to be treated in the same manner as that described by Longmaid in 1842, except that, there being a reduced quantity of salt employed, the whole may be at once mixed before being introduced into the furnace. Each charge of ore and salt is to remain from twenty to twenty-four hours on each bed of the furnace, and to be drawn in about eighty to ninety-six hours, which the workman will judge of by the muriatic acid being driven off. And it should be stated that Longmaid found that some ores, when so treated with salt, are liable to flux. In such cases he applied about ½ cwt. of small anthracite coal or other carbon mixed with a charge of a ton of mixed ore and salt, either when the same indicates fluxing in the furnace, or with all future charges of the same ore. The charge being drawn from the furnace, is then to be lixiviated with water in suitable vessels. The liquor obtained will contain metallic matters in solution, according to the nature of the ores operated on, together with sulphate of soda, muriate of soda, or chloride of sodium. The copper contained in any liquor obtained as above explained may be precipitated, as is well understood, by means of iron; and the milk of lime may be subsequently employed for separating the zinc, associated with an excess of lime and with some oxide of iron. Longmaid, in 1844, stated that the oxide of tin separates from the liquor by gravity, with residuary matters; and if they be not broken fine enough for the washing process to separate the oxide of tin, they are to be broken before washing to separate the tin in the ordinary manner (?). If the whole of the copper and zinc be not converted into the soluble form by the first operation, the insoluble residue may be treated with weak muriatic acid obtained by condensing (?) that product as it is evolved from the furnace where the ores are being treated with common salt, or weak muriatic acid otherwise obtained may be employed to dissolve the copper and zinc not before rendered soluble in water; and these metals may be separated from the solutions thus obtained, as above explained.

Longmaid, in 1851, says;—"In my processes, of 1842 and 1844, for treating ores and minerals, I have found considerable difficulty in condensing the gas and vapours arising therefrom, in consequence of the volatile carbonaceous matters contained in bituminous coal, which, when volatilized together with free carbon, have a tendency to choke the condenser, and thus retard the operations in the furnace, as well as hinder the condensation of the other volatile products of the process of calcination.

"In using coke in the decomposition of common salt and ores and minerals containing sulphur, I prefer having the fire-place of the furnace closed with a door, and the ash-pit supplied with water, which, being gradually converted into vapour, ascends through the fire, and promotes the combustion of the fuel.

"In using anthracite coal in the decomposition of ores and minerals and salt, I mix a small portion of (coking) bituminous coal, about $\frac{1}{6}$ part by weight of the anthracite coal, which has the effect of causing the mass to cohere on the application of heat. The opening to the fire-place I fit with an iron plate, about 2 ft. by 18 in., over which I turn an arch 15 in. high—that is, leaving the opening for charging the furnace with fuel 18 in. wide by 15 in. high in the clear. When the fire is well raised, I fill the opening with the mixed coal, and whilst in this position it becomes partially coked; when it is necessary to replenish the fire with more fuel, I move the partially coked coal on to the burning mass in the fire-place, and place a further quantity of coal on the plate, as before; I also apply water to the ash-pit, in a similar manner to that described when coke is the fuel used.

"The volatile products of the sulphating process possess great affinity for water, and their condensation is facilitated by the introduction of steam into the flue leading from the sulphating

furnace to the condenser at a convenient distance from the furnace; the object of the application of steam is, to obtain an intimate mixture of aqueous vapour with the volatilized matters, and thereby to promote their more perfect condensation.

"I have described processes for treating ores and minerals, and the manufacture of alkali, copper, and other products, by mixing such ores and minerals with common salt, and subjecting the mixture to heat in a furnace. In carrying these processes into practical operation, when treating ores and minerals containing silver and copper, these metals have been converted into a condition soluble in a solution of alkaline and metallic salts, being the product of some of these processes, and I have hitherto precipitated them by means of metallic iron, and then proceeded to oxidize the copper of such precipitate, and dissolve the oxide of copper so obtained with sulphuric acid, producing sulphate of copper in the well-known manner; the residual product, containing the silver, has hitherto been separated by the ordinary process of smelting silvery lead ores.

"I will now describe my improved processes for treating ores and minerals containing silver and copper, and the manner in which the same are performed. I treat ores and minerals containing sulphur in the manner described by me in 1842. I grind the ore and minerals containing sulphur, and mix with common salt, and calcine the mixed material, and obtain solutions therefrom, which I treat as hereinafter described; but if the minerals contain a considerable quantity of arsenic, antimony, or zinc, or any of them, I prefer to calcine such mineral, in order to drive off some or all of these volatile metals; I then mix the calcined material with ore or mineral rich in sulphur, so as to make the average quality about twenty to thirty of sulphur—that is, when one of my principal objects is to obtain sulphate of soda.

"If the ores or minerals be rich in sulphur, and I have none of the calcined ore, I prefer to reduce the percentage of sulphur by the addition of oxide of iron in a finely-divided condition; in all cases the process is best conducted when the sulphur in the mixed material is about 30 parts by weight to 100 parts of salt employed.

"If the primary object be to separate silver and copper from ores and minerals, it is sometimes convenient to calcine the material until the sulphur is nearly driven off, and then to add common salt to the charge, and subject it to further calcination; from eight to twelve hours will generally be found sufficient to convert the silver into the state of chloride.

"I usually grind the ores and minerals sufficiently fine to pass through a sieve of at least six holes to the inch; the richer the ores and minerals are in silver and copper, the finer I prefer to grind them, in order to ensure the whole or nearly the whole of the silver and copper being converted into a condition soluble in the sulphate liquor.

"I place the calcined mass, which I call sulphate ash, in a suitable vessel or vessels, and dissolve the soluble portions in water; the solution thus obtained consists of sulphate of soda, and soluble salts of silver and copper, and other matters; this solution I call sulphate liquor; I cause it to flow through a vessel or series of vessels furnished with metallic copper, the liquor coming into contact with the copper, the silver is precipitated, and an equivalent of the metallic copper is dissolved; when the silver is precipitated, I run the liquor into another vessel or set of vessels, in which the copper is precipitated by iron. If, however, the liquor be so rich in these metallic salts, that the whole of the silver or copper is not readily precipitated, I increase the number or size of the vats, or repeat the operation. Having carefully examined the liquor, to ascertain that the precipitation of the silver and copper is complete, I run the liquor into the alkali department of the works, to convert the sulphate of soda into carbonate. In order to dissolve the whole of the soluble portions of the sulphate ash, I repeat the washing until no more sulphate of soda or metallic salts are obtained; I preserve the weak liquor, and apply it to further portions of the sulphate ash; I convert the precipitate obtained by means of iron, above mentioned, and in fact any copper containing silver into regulus, by the well-known means. I prefer to granulate the regulus, in order to facilitate the further operations whereby the copper and silver are separated by common salt.

"In the manufacture of sulphate of copper, I find it convenient to convert the sulphide of copper into sulphate by calcining the regulus or other sulphide, being the product of my processes for precipitating silver and copper from thin solutions, by means of the compounds of sulphur, which I use for precipitating the sulphides of silver and copper, or the sulphides, carbonates, or oxides of these metals from their solutions at a low temperature with access of atmospheric air, and thus produce sulphate of copper and a soluble salt of silver; these I dissolve with water. precipitate the silver from this solution by means of metallic copper, and draw off and crystallize the liquor containing the sulphate of copper, the silver being obtained as a residual product. If the sulphate of copper be not wholly converted into sulphate, or if it be the mixed precipitate containing carbonate, or oxide, or both, I add sulphuric acid, and thereby dissolve the copper.

"I precipitate silver and copper from thin solutions by means of sulphide of calcium, such as alkali waste, which compound contains sulphide of calcium. I also precipitate silver and copper from thin solutions, by means of compounds containing alkaline and metallic sulphides and other alkaline salts, such as the third product (which I call green ash), which product contains sulphides of iron and sodium, carbonate of soda, caustic soda, and other matters, or one or more of these alkaline compounds; or I use solutions thereof. I also precipitate silver and copper from thin solutions by means of black ash or crude alkali, which contains sulphides of calcium and sodium, carbonate of soda, and caustic soda, or one or more of these alkaline compounds; or I use solutions thereof. When I use the earthy sulphides, or the alkali waste containing sulphide of calcium, I find it convenient to sift these substances through a sieve of six or more holes to the inch, in order to separate the coal and cinder and the larger aggregated masses of the alkaline earthy matters; having thus prepared a sufficient quantity, I place a layer in the bottom of the precipitating vessel; having previously provided means for filtering the liquor, I prefer to put a layer of straw, coke broken into fragments, or cinders, and on this I place the precipitant, and proceed to fill the vessel or vessels with the liquor containing the metals to be precipitated. Into a vessel or series of vessels about

15 to 20 ft. square and about 6 ft. deep, I put a layer of alkali waste or other earthy sulphide, about 18 in. deep, through which I cause the liquors to permeate slowly; the silver and copper during this operation combine with the sulphur of the sulphides and the chlorine or acid, and the oxygen in the latter case; and passing over from the metallic salts to the alkaline earthy matters, the metallic sulphides are precipitated, being insoluble in the sulphate liquor; or I allow the solution containing the metallic salts to remain in contact with the precipitant until the metals are precipitated. This operation will usually occupy only an hour or two, but it is desirable that sufficient time be allowed in order to obtain deposition of the precipitated matters; this will be ascertained on examining the liquors from time to time. When the precipitation and deposition are complete, the liquor is to be drawn off and the residual product fluxed to convert the silver and copper into regulus. The black or green ash, herein described, may be used in the solid form in a similar manner to that described when using alkaline earthy sulphide; but I prefer to make a strong and hot solution, and having ascertained the quantity of silver and copper in the sulphate solution, I run a quantity of the sulphide solution into a vessel or set of vessels, and then add the sulphate solution thereto. If the whole of the silver and copper are not precipitated, I add a further quantity of the precipitant. When the precipitate is fully subsided, I carefully draw off or filter the sulphate liquor which is to be used in the manufacture of sulphate of soda, and for the purposes to which sulphate of soda is usually applied. When the precipitate is sufficiently accumulated, I wash and dry it, and proceed to heat the precipitate, as herein described, to manufacture silver and sulphate of copper, or silver and copper, as the case may be.

"From such ores and minerals as are rich in silver, but containing little sulphur, with or without copper, I obtain solutions containing silver or silver and copper, as the case may be. I dilute the strong solutions with water; I heat the diluted solution by preference to boiling, and the silver is precipitated in the state of the chloride. I usually find this accomplished when Twaddle's hydrometer stands at 30 when applied to the diluted liquors. When the chloride of silver is fully subsided, I run the liquor, if it contain copper, into another vessel or set of vessels, and precipitate the copper, and I collect the chloride of silver and smelt it. I can treat such ores and minerals as are rich in silver, but with little sulphur, when containing copper, with common salt, and obtain solutions containing silver and copper. I produce a weak or diluted solution, and thereby precipitate the silver in the state of chloride on the residual matters of the ores or minerals. I mix the precipitate in this case with lead or lead ores, and smelt in the ordinary manner of smelting silvery lead ores; but if the silver has been precipitated separately by dilution, it may at once be smelted and metallic silver obtained. The copper solution I treat by any of the well-known methods for separating copper.

"In treating regulus containing silver and copper, I mix it with 5 or 10 per cent. of common salt by weight of the regulus, and grind it so as to pass through a sieve of 10 or more holes to the inch, and calcine the ground material in a furnace. As it is better to conduct this operation gradually, I prefer a furnace of three or more beds, each bed of about 12 ft. square, but a furnace with one or more beds may be used. I place the first charge on the bed farthest from the fire, and when it has remained about eight hours in the back bed I move it on to the next bed, and so on in rotation, occasionally stirring it and drawing the finished charge at the bed nearest the fire; the calcined material is put into vessels. When the soluble portions are dissolved, if the calcined material does not contain alkaline and metallic salts, I add strong and hot sulphate liquor, this solution having the property of dissolving chloride of silver; if, however, the whole of the chloride of silver is not dissolved by the first operation, I repeat it. In treating such ores, if the sulphate of soda be not an object of importance to the manufacturer, as will sometimes happen, I precipitate the chloride of silver by means of diluting the solution with water; having obtained the dilute solution, I heat it as before mentioned; this operation of heating causes the particles of chloride of silver to aggregate, and facilitates its deposition. I allow the liquor to rest until the chloride of silver has subsided, and then draw off the clear liquor; about forty-eight hours will generally be sufficient for its subsidence. I collect this precipitate and smelt it for silver.

"The ordinary regulus of the copper-smelter frequently contains a notable quantity of antimony; in this case having obtained solutions as before, I proceed to precipitate the silver and antimony together by the process of dilution with water; I collect and smelt the precipitate with lead, or a compound of lead, in the well-known manner of smelting silvery lead ores, and thereby obtain the antimony and silver. But if the ore or mineral treated be a sulphide of copper containing silver mixed with any compound of iron, I mix such material with common salt, calcine and dissolve the copper with hot water, taking care that the solution be so weak as not to dissolve the chloride of silver, which is obtained with the oxide of iron as a residual product, which I smelt with lead or compound of lead, as above described. If the ore or mineral I treat be a mixed mineral, such as sulphides of silver, lead, and copper, I proceed to mix such ore with common salt and calcine the mass, and dissolve the copper with water, and I prefer the use of a solution so dilute that the chlorides of silver and lead are not retained in the cold solution, but are deposited with the mass of the lead contained in the ore; the copper of the weak solution I precipitate. But if it be desired to produce chloride salts of lead, I dilute it, and thereby precipitate the silver; I draw off the hot solution and allow the chloride of lead to subside on cooling, after which I precipitate the copper as before. If the mineral I treat be regulus of copper, or the sulphide precipitate herein described, a portion of the copper only will be rendered soluble; this portion may be precipitated, but I prefer to use solution of black or green ash, and smelt the precipitate separately with great care; by this improvement I produce copper of a superior quality; the portion remaining undissolved I smelt. It is sometimes convenient to precipitate the silver and copper by means of other compounds of sulphur. To produce sulphides of silver and copper in all cases, I treat such sulphides as before explained, when describing my processes for treating such sulphides.

"Lastly, I select such product of the calcined ores and minerals as consist of oxide of iron; I separate the oxide of iron from the earthy matters by washing, and mix it with sufficient carbon to deoxidize the oxide of iron, and a small quantity of clay to cause it to cohere; I then mould the

mixture into balls, or other convenient shape, and subject it to a smelting process in a reverberatory furnace; the product is iron of fine quality. The carbon I use by preference to anthracite coal or charcoal, and in all cases the clay and carbon should be as free as possible from sulphur."

G. Hähner, in 1856, proposed to decompose certain metallic oxides at a high temperature in contact with alkaline chlorides, or other chlorides forming oxychlorides, or chlorides soluble in water, in avoiding the formation of free soda by the addition of a mineral acid, and lastly, separating the metals contained in the solution, and utilizing the residues.

For this purpose, the metallic ore is reduced to pieces and roasted, then pulverized, and again roasted with the admixture of coke, coal, or charcoal reduced to minute particles. After perfect oxidation of these matters, Hähner proposed to introduce into the furnace, to be mixed with the ore, a mixture of about two parts or more of chloride of sodium (common salt) or other alkaline chlorides, and three parts of ore already roasted to each part of metal to be extracted. When there was no longer any trace or smell of muriatic acid vapours, he introduced the roasted ore into vessels provided with filters, into which vessels water slightly acidulated was poured to wash the ore. According to this process, if the ore contains copper or silver, these metals will be found in the solution. The oxides of iron, tin, zinc, and so on, remain in the vessel; the oxide of tin is separated by washing, and the oxide of zinc by reducing it to metallic zinc. Gold remains also in the vessel, and is converted into chloride of gold by means of a stream of chlorine which is introduced into the vessel, and the chloride of gold dissolved in water. In certain cases, Hähner prefers to precipitate the copper by means of a stream of sulphuretted hydrogen, or by a solution of common ash, potash, or soda alone or mixed with lime.

Hähner further observes;—"To form the oxides I submit the ore to roasting either in the open air, or in kilns or furnaces for the purpose of expelling sulphur, arsenic, and other volatile substances, and render the ore more friable. If the metallic rock-gang contains calcareous substances, it must be burnt in a similar manner to lime, and dissolved in water; the oxides, and so on, of this ore will deposit at the bottom of the vessel in which the lime has been dissolved and driven off. Oxidized and other ores which do not contain sulphur or other mineralizing substances only require to be brought to a red heat. The ores treated as before described are then reduced to powder by the ordinary means, and again roasted in a reverberatory furnace, a small quantity of coke, charcoal, coal dust, or other combustible being added to facilitate the operation. To decompose metallic oxides obtained, and also other oxides, the red-hot ore remaining in the furnace after being completely roasted is mixed with an alkaline chloride (chloride of sodium being preferred on account of its low price) in the proportion of about two parts by weight (more or less, according to the nature of the ore) of chloride for each part by weight of metal to be extracted from the ore. To obtain a more perfect mixture, I add to the chloride, before its introduction, about an equal weight of ore already roasted, mixing them intimately, and moistening them if dry. The moistened chloride or mixture of chloride and roasted ore ought then to be incorporated as intimately as possible with the red-hot ore in the furnace, and kept in a continual movement, and at a red heat until the smell of muriatic acid becomes less perceptible, and the ore commences to adhere to the workman's tools; the ore is then withdrawn from the furnace, and a fresh charge added. It is advantageous to leave the red-hot ore thus withdrawn for some time in heaps, which renders the process still more perfect. If the ore contains no silica, it is requisite to add about 10 per cent. of this substance. The ores treated as before described are then submitted in a hot state, if possible, to lixiviation. I add to the water employed for the lixiviation of the roasted ore, about 5 parts by weight, more or less according to the nature of the ore, of sulphuric, muriatic, or other acid to 1000 parts by weight of ore, to render more soluble the oxychlorides or chlorides, and to decompose the free soda, silicates of soda, and so on, which may have been formed during the roasting, and which would cause a great loss of metal. The vessels in which the lixiviation is performed, may be of wood or masonry work, and may be of any form and dimension, according to circumstances; they should be furnished with an ordinary filter to allow the water to run off freely. The precipitation and purification of the metals contained in the solution, or the formation of other commercial products, can be effected by the usual processes. The copper, however, may be precipitated also by common ashes, lime water, and caustic water, and the products obtained may be used in the manufacture of different colours, salts, and so on, or reduced to the metallic state in ordinary furnaces, or by other known processes. The copper may also be precipitated in the state of arsenite or arseniate of copper for the formation of Schieles or Vienna green, by means of a solution of arsenite or arseniate of potash. The refuse wash waters which have served for the separation of the metals may be employed for moistening the roasted and pulverized ores, or for other purposes. After the lixiviation, there remains in the vessel the powdered metallic rock gold, oxides of iron, tin, zinc, and so on, if the ore contained such metals, which can be utilized by known means."

Other methods of treating ores containing copper, as well as those of Napier and Henderson, will be treated of hereafter. See ALLOYS. ARSENIC. ATOMIC WEIGHTS. CHIMNEY, p. 951. FURNACES. GOLD. IRON. KILNS. LEAD. NICKEL. ORES, *Machinery and processes employed to dress.* REAGENTS, *employed in smelting ores.* SILVER. SULPHUR. TIN.

COPING. FR., *Larmier;* GER., *Mauerabdeckung;* ITAL., *Coronamento;* SPAN., *Caballete.*

The *Coping* is the highest or covering course of masonry in a wall, often with sloping edges to carry off water; sometimes called *capping.*

COP-SPINNER. FR., *Bobinoir;* GER., *Spulmaschine;* ITAL., *Filatoio;* SPAN., *Hilandera.*

See COTTON MACHINERY.

CORK-CUTTING MACHINE. FR., *Bouchonnier;* GER., *Pfropfenschneidmaschine;* ITAL., *Macchina da turaccioli;* SPAN., *Máquina para cortar corchos.*

Figs. 2134 to 2139 relate to a peculiar construction and arrangement of a cork-cutting machine, invented by Hammer and Butz, of Philadelphia, U.S., whereby all the successive operations for transforming the bark of the cork-tree into any of the various descriptions of corks, may be conducted in such a manner, that the several operations can be simultaneously employed at different

manipulations upon the same machine, without hindrance to each other. This machine consists of an arrangement and combination of mechanism for cutting tapered corks from square or cylindrical blocks; of an improved arrangement for effecting the preliminary operation of cutting the raw bark into strips, and for subdividing these strips into parallel or tapered blocks of any required size, to be subsequently reduced to cylindrical or tapered corks in the first-mentioned part of the machine; and of mechanism combined with these arrangements for cutting flat and cylindrical corks by means of revolving crown cutters; the whole of these various subordinate combinations forming one complete machine, driven by one main driving belt. The main shaft of the machine carries a circular disc-cutter at each end, the edges of which are kept sharp by oil-stones fitted to the framing, and held in contact with the cutting edges as they revolve. One of these cutters, which is of larger diameter than the other, is for cutting tapered corks from square or cylindrical blocks; these blocks are contained in a tray or receptacle supported by a fixed bracket, and at the delivery mouth of this receptacle there is an adjustable gauge, against which the block is held by a blade spring until it is grasped between the adjoining ends of two rotating spindles. These spindles are contained in a sliding frame, and one of them, which may be termed the live spindle, receives a positive rotatory motion from an endless chain and chain pulley, the other being merely carried round by the frictional contact with the cork. A self-acting clutch and clutch-lever throw the chain-actuating pulley out of gear when the sliding frame is receding from the cutter, so that the spindles may be at rest when in the act of gripping the block, and, consequently, they take hold of it with greater certainty and accuracy. The grip is obtained by the aid of a spiral spring on one of the spindles. As the sliding frame approaches the cutter with the block of cork to be cut, the clutch is thrown into gear again, and the rotation of the spindles recommences. The cork being cut, and the sliding frame receding from the cutter, the spindles are separated, in order to allow the cut cork to fall into an inclined shoot below, which delivers it into a receptacle for the purpose. The clutch above referred to is thrown in or out of gear by a projection in the sliding frame coming in contact with the tail of the clutch-lever, as the slide moves to and fro. The separation of the spindles, in order to release the cut cork, is effected by a movable or spring incline, which acts upon the lower end of a lever, the upper end of which grasps a collar on the spindle to be slid back. This incline enables the lever to pass freely in one direction, namely, when approaching the cutter; but acts upon the lever and releases the cork when moving in the opposite direction, or receding from the cutter. The reciprocating motion of the sliding frame is obtained by means of a chain or cord attached to opposite ends of the slide, and passing under a drum or pulley to the periphery of which it is secured. By turning this drum or pulley in one direction or the other, by the aid of a lever handle, a reciprocating motion is imparted to the sliding frame. The apparatus for cutting the bark into strips consists of the smaller one of the two circular disc-cutters, in combination with a table and adjustable gauge. The bark is laid upon the table with its edge against the gauge, and the cutter, by revolving in the direction of the feed, draws in the bark as fast as it is cut, without any force being required to pass it through the machine. When subdividing these strips into blocks, a sliding saddle is fitted on to the table, and upon this saddle is placed a head-piece having a squaring strip thereon, against which one side of the strip of cork is held whilst being cut. This head-piece is pivoted to the saddle by a vertical centre pin, upon which it is free to turn slightly in an horizontal plane, so as to present itself, and the strip of cork upon it, at an horizontal angle with the plane of the cutting edge of the circular cutter. This angular movement is controlled by two screw pins passing through slots in the head-piece, which screws, when tightened, serve to hold the head-piece fixed in a position perfectly parallel to the cutter, when parallel blocks are to be cut. When tapered blocks are required, the head-piece is moved alternately from one strip to the other between the successive cuts, and hence in lieu of the strip of cork being cut across at right angles, which would produce parallel blocks, it is cut across alternately at two opposite angles, thereby producing tapered blocks. The apparatus for cutting flat and cylindrical ends consists of a vertical spindle, to the lower end of which are fitted different sized crown cutters, according to the diameter of the corks required. Beneath this spindle there is provided a table for supporting the cork to be operated upon. The vertical spindle is driven by a twisted strap, from a driving pulley on the main or disc-cutter shaft of the machine, such strap passing around a small fixed pulley on the vertical spindle. By having the usual fast and loose driving pulleys on the main-cutter shaft of the machine, and driving the same by a belt, the whole of the different operating parts receive motion simultaneously and in concert.

Fig. 2134 is a side view of this cork-cutting machine, combining the above-mentioned devices for effecting the several successive operations; Fig. 2135 is a front view of the machine; Fig. 2136 is a plan of that part of the machine in which the bark is first sliced and then cut into blocks; Fig. 2137 is a detached side view of the feed arrangement of the tapering machine for cylindrical blocks; Fig. 2138 is a plan thereof; Fig. 2139 is a detached plan view of part of the mechanism for cutting tapered corks; and Fig. 2140 a detached view of the feed-table of the tapering machine for square or bevelled blocks. A is the main shaft of the machine, provided with fast and loose driving pulleys $a\,a^1$, and carrying at its extreme ends, outside of the adjustable bearing $b\,b$, the circular cutting discs or knives B and C, the larger one of which (B) serves to cut conical or cylindrical corks from blanks fed to it by means of the sliding spindle frame D. This frame—hereafter more fully described—is fastened in an adjustable manner to the slide E, reciprocating in a bed F. The feeding device for supplying cylindrical blocks to the spindles for transmittal to the knife B, is supported upon a stand c, and is constructed as follows;—Attached to the stand c, and vertically adjustable upon the same by means of a screw d, there is a rectangular piece d^1; on the top of the horizontal part of d^1 is placed the gauge e, which is adjustable lengthwise along d^1, and secured by a screw and nut. A receptacle G for the corks to be fed to the spindles is provided on the top of e. The position in which the cork is placed for being grasped by the spindles J and J^1 is best understood from Fig. 2137; resting upon the inwardly projecting end of d^1, the cork is lightly pressed against the gauge c by a spring pad f, swinging upon a small rock-shaft g, which pad is

sufficiently yielding to allow the cork to be removed horizontally towards the cutting disc. A sliding movement of the spindle frame D, for alternately carrying the corks to the knife and returning to the feed-table for a next one, is given by means of a cord or band *h*, so attached to the opposite ends of the slide E, and to the periphery of a pulley H, that by means of a hand-lever H^1 on the pulley-shaft *i*, motion is transmitted to E by the cord *h* in either direction. The outward movement of the slide E is arrested by a fixed stop I on the plate F, while a screw I^1 serves as an adjustable stop for the movement of E in the opposite direction; by varying the position of this screw, the finished diameter of the screw is regulated with accuracy. The spindle J, for rotating the cork as it is presented to the cutting edge of the circular knife B, is driven by means of a chain *j* passing over the pulleys j^1 and j^2, the latter being the driver, and receiving motion through the bevel-wheels j^3 and belt j^4 from the main shaft A. j^2 is provided with a clutch and

2134.

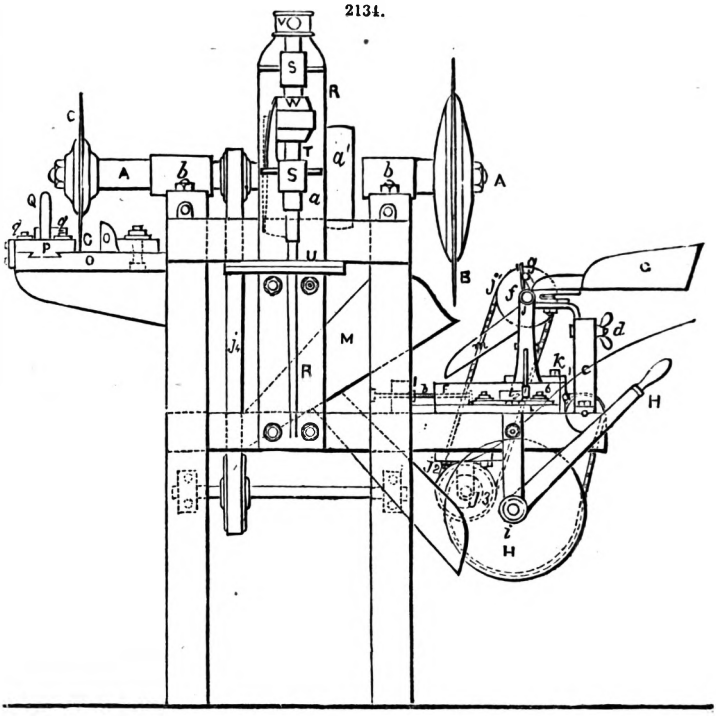

2135.

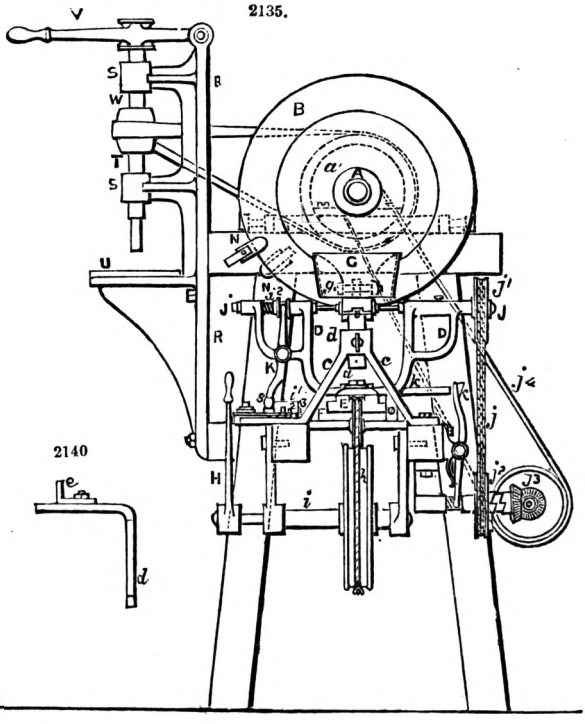

2136.

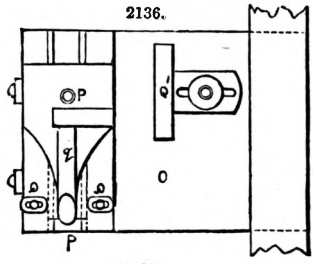

2137.

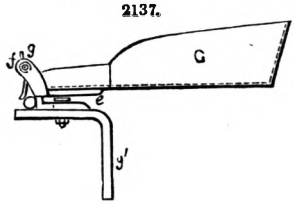

2138.

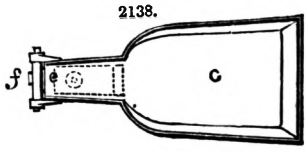

2139.

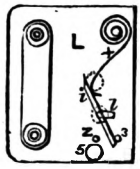

so actuated by a clutch-lever *k* and arm k^1 projecting from the slide E, that the spindle J ceases to rotate as it recedes towards the feed-table, and is in turn thrown into action when approach-

ing the cutting disc. The spindles being thus at rest when grasping the blank to be conducted to the knife, will be much more certain to take accurate hold of the blank than if they were revolving at the time. A rocking arm K, actuated during the sliding motion of E by an inclined plane i^1, and by a spiral spring i^2, on the spindle J^1, serves to give the requisite sliding movements to that spindle for alternately grasping and releasing the corks as they pass through the machine. Although this sliding motion of one spindle only is ordinarily sufficient, it may in some cases be advantageously given to both spindles. The arrangement of the inclined plane i^1, and the manner in which it actuates the double-armed lever K through the spindle J^1, will be best understood upon reference to Fig. 2139, where it will be seen that i^1 is attached to a plate L in the following peculiar manner;—It has a limited vibrating movement upon a central axis *l*, between two small stops 2 and 3, the axis *l* being confined in an oblong opening in the plate L; a light coiled spring 4 bears against one end of i^1, and brings its other end in contact with the pin 3.

The operation of the whole is as follows;—The lever K, while holding the cork to the knife, occupies the position represented in Fig. 2135, and as it recedes towards the feed-table, its small friction-roller 5 brings up against i^1, as shown in dotted lines at Fig. 2139; by yielding to the inclined plane the lower arm of K is drawn inward, and by a consequent movement of its upper end in an outward direction, the cork just finished is released from between the two spindles, and falls down; in this separated position the spindles remain during the whole outward movement, until at the instant of the slide E, bringing up against the stop I, the friction-roller 5 is liberated from the inclined plane; the spiral spring i^2, being thus freed from its previous compression, suddenly pushes the spindle J^1 inward, to make it grasp the blank on the feed-table. The roller 5 on the arm K is now in the position shown in dotted lines, Fig. 2139; and as upon the advance of E toward the knife, this roller comes in contact with the inclined plane i^1 on the opposite side, the latter will yield to it in the oblong bearing of its axis *l*, so as not to disturb the spindles in their hold upon the cork to be cut; in returning from the knife the described routine of movements is repeated. By an arrangement of hoppers or inclined planes, shown in Fig. 2134, the chips are separated from the finished corks; the former, curling up on the inner side of the knife, fall into the large hopper M, and are heaped up under the frame of the machine; while the corks as they leave the spindles are carried over two inclined planes *m* and *n* into a separate receptacle. N and N^1 are small oil-stones, so attached to their supports as to press lightly against opposite sides of the cutting edge of the knife, thus keeping it uniformly sharp. The mechanism for cutting the bark into strips consists, in addition to the small circular knife C, of a table O and gauge O^1; the end of the piece of bark to be cut into slices is held against the gauge O^1, and then laterally advanced toward the edge of the revolving circular knife C, the direction of motion of which is such as to draw the bark through without the least application of force on the part of the workman. For the subsequent operation of reducing these strips into blocks, a sliding saddle P is employed in addition to the gauge O^1, which saddle has a vibrating head-piece Q. When required for cutting blocks with parallel sides, this head-piece is permanently fastened upon the sliding saddle P, in the position shown in the engraving, Fig. 2136; but the same parts are in a very simple and efficient manner adapted to cutting blocks with tapering sides, from which tapered corks can be cut most economically. To this end, the head-piece Q is made to vibrate upon an axis *p*, this movement being limited between adjustable stops *q q*; the strip of cork is laid upon the front part of the head Q against the squaring strip Q^1, and between successive cuts of the knife the head is moved alternately from one stop to the other, so that the cork blocks become tapered by thus reversing the angle for each successive cut. In addition to the above mechanism, the machine is provided with a frame R, carrying in bearings S S the hollow cutter-spindle T, for cutting cylindrical and flat corks of any required diameter and thickness, by means of changeable cutters set into the lower end of the spindle. U is the table upon which rests the slice of cork to be operated on by the revolving cutter, and V is the lever for actuating the cutter-spindle; the latter is driven from a pulley on the main shaft A by means of a half-twist belt running over a small pulley W.

CORNICE. Fr., *Corniche;* Ger., *Karniess;* Ital., *Cornice;* Span., *Cornisa.*

Any moulded projection which crowns or finishes the part to which it is affixed is termed a *cornice;* as the cornice of an order, of a pedestal, of a door, window, or house.

CORNISH ENGINE. Fr., *Machine à vapeur pour élever l'eau;* Ger., *Wasserhebungsmaschine;* Ital., *Macchina di Cornovaglia.*

See Pumps and Pumping Machinery.

CORN MILL. Fr., *Moulin à blé;* Ger., *Mahlmühle;* Ital., *Mulino;* Span., *Molino harinero.*

See Mills. Barn Machinery, Fig. 546.

CORROSION. Fr., *Corrosion;* Ger., *Zerfressung-Corrosion;* Ital., *Corrosione;* Span., *Corrosion.*

With the exception of Robert Mallet's extensive experiments on the action of air and water upon iron and steel, *corrosion* and *anti-corrosion* have not received that amount of attention on the part of scientific men—chemists in particular—that their industrial importance demands.

Malleable iron undergoes no change in dry air, or in water free from air; but in moist air, or water containing air, it gradually becomes oxidized or rusted from the surface inwards, until eventually the entire mass is converted into oxide. The carbonic acid present in atmospheric air appears to contribute largely to the production of this change. The presence of saline substances in water also facilitates the oxidation of iron, while alkalies and oily or resinous substances retard it. Contact with more highly electro-positive metals, such as zinc, also hinders the oxidation of iron within a certain distance around the point of contact. Caustic alkalies or alkaline carbonates act as preventatives. There is a theory that, so soon as the first thin coating of oxide has formed upon the surface of the metal, a galvanic action sets in, whereby the process of oxidation is greatly accelerated, the iron acting as a positive agent, the oxide as a negative one. Brass and copper are attacked by ammonia, for which no efficient preventive is known.

Corrosion of Steam Boilers.—The process of corrosion is very similar to that of the combustion of

fuel, the only difference being that in corrosion the metal unites with the corrosive agent slowly, while in combustion the fuel unites rapidly with the supporter of combustion.

The external corrosion of a boiler is due to simple oxidation, caused principally by atmospheric exposure.

In the boilers of sea-going vessels it is also caused by the contact of the bottom of the boiler with bilge-water, and by the exposure of the top to leakage from the deck. The best means of preventing this is to cover the top with felt and sheet lead soldered at the joints, and to keep the bottom thoroughly painted. The internal corrosion is due to simple oxidation, and to the galvanic action taking place whenever two different metals or a metal under different conditions are either wholly or partially immersed in a fluid in which either of them would be oxidized—that is, united with the oxygen of the corrosive agent, and which has the effect of confining the corrosion principally and sometimes wholly to one of the two metals in contact. The sheets are eaten away around the rivets before the rivet is injured, on account of the iron in the rivet being in a different condition from that in the sheet, owing to its being more dense from being hammered until cold, and, consequently, producing a galvanic action by which the sheet is corroded. Tube-sheets are apt to leak, when the sheets and tubes are composed of different metals, from the effect of the galvanic action produced by them.

The hot brine or sea-water contained in marine boilers is a most powerful corrosive agent of wrought iron. Hence the stays are corroded, and the pins or bolts which hold the stays are eaten and loosened. A very thin film of scale is the best protection against this kind of corrosion. The corrosion of the steam drum is caused by the high temperature of the uptake, about 600° Fahr. for natural draft, thereby superheating the steam, and oxidizing the iron in a similar manner to the making of hydrogen gas, by sending steam over red-hot iron.

Boilers not in use are liable to corrosion on the fire side of the heating surface as well as on the water and steam side. To prevent this, the smoke-stack should be covered over to keep out rain and moisture; the man-hole plates taken off, so as to allow a free circulation of air inside; and a light fire of shavings should be built occasionally to dispel all moisture.

Corrosion of High-pressure Boilers.—Speaking on the explosion of locomotive and other high-pressure boilers, William Kirtley, of Derby, in a paper printed in the Proceedings of the I. M. E. (1866), observed that in the large majority of exploded locomotive boilers it has been found that the explosion has arisen from the plates of the boiler having become weakened by *corrosion* at particular places. In the paper referred to it was the writer's object to describe the nature and extent of this corrosion, and to endeavour to show the causes of its occurrence, together with the means of prevention.

In the present ordinary construction of locomotive boilers with lap-joints, as shown in Figs. 2141, 2142, the wear by corrosion of the plates is found principally round the smoke-box end of the boiler barrel, in the interior, opposite to the edge of the outside angle-iron as shown at A A in Figs. 2143 to 2145, where an annular groove is found to be eaten out of the plates by corrosion. This grooving extends sometimes so deep into the plate that only a thin shell of metal is left on the outside at the bottom of the groove, as shown in Fig. 2145, which is a full-size section of an actual case of the grooving; and the corrosion takes place so rapidly in many cases that the plates require renewal after only a few years' work. A similar grooving also takes place along the edge of the inside lap at the longitudinal joints, as at D and E in Fig. 2146, and also at the transverse circular joints, as at B B in Figs. 2147, 2148; but in the latter case the grooving does not occur so frequently, nor is the extent of corrosion so great, as at the smoke-box end and at the longitudinal joints.

It may be remarked first that this grooving is only found below the water-line, showing that it must be due to the chemical action of the water on the plates; and the special point to be inquired into is the cause of this action being so remarkably concentrated at the particular lines where the grooving takes place. It was evident from the specimens shown Kirtley, which were taken from locomotive boilers that had been at work for various periods of from three years to as much as nineteen years, that some corrosion also takes place over the general surface of the plates; but this is very limited in extent compared to the grooving at the seams, and it occurs very irregularly, being apparently influenced by some irregularities in the structure of the plates, causing them to be pitted irregularly by the corrosion.

In the ordinary construction of locomotive boilers with lap-joints, as shown in Figs. 2141, 2142, the barrel of the boiler is constructed of three rings, each ring formed by two plates of $\frac{7}{16}$ in. thickness, riveted with lap-joints F F and H H. The general amount of lap is $2\frac{1}{4}$ in. for single-riveted and $3\frac{1}{2}$ in. for double-riveted joints. The smoke-box and fire-box are each united to the barrel of the boiler by an angle-iron K K, Fig. 2142, 3 in. or $3\frac{1}{2}$ in. wide, welded into a ring. General experience has shown that after five or six years' wear of these boilers the grooving action that has been described is developed at the joints and at the edge of the angle-iron rings.

Now the longitudinal strain upon the joints of boilers constructed in this manner tends to spring and bend the plates at the joints, when under pressure, into the form shown exaggerated in Fig. 2149, in consequence of the plates not being originally in the line of strain, as shown by the dotted line S S in Fig. 2142, which, it will be seen, runs along the outer face of one plate and the inner face of the next. Also, in the longitudinal joints of the barrel, shown at F F in Fig. 2141, a similar mechanical action takes place, the strain acting in the true circle shown by the dotted line S S, springing and bending the plates at the edge of the joints, as shown at G G, each time that the boiler is under pressure. The continued alternation of expansion and contraction in the boiler causes the scale that is deposited upon the plates from the water to be continually broken off at the edge of the joints by the mechanical action of this springing and bending of the plates at the lines of the joints; and the plates are thereby laid bare at those parts, and kept continually exposed to the corroding action of the water, instead of being protected from the action of the water by the deposited scale remaining attached to them.

Though the corrosion produced by the water is slow in action and but slight in effect on the rest of the boiler-plates, which are protected by some deposit of incrustation remaining almost con-

2141.

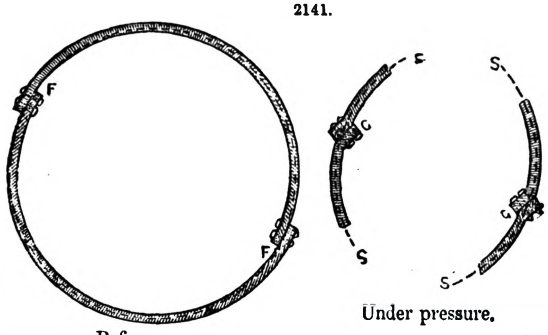

Before pressure. Under pressure.

2143.

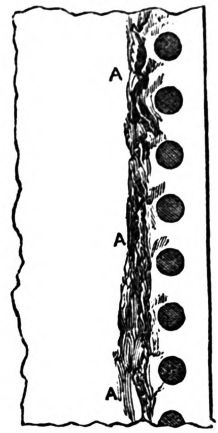

2142.

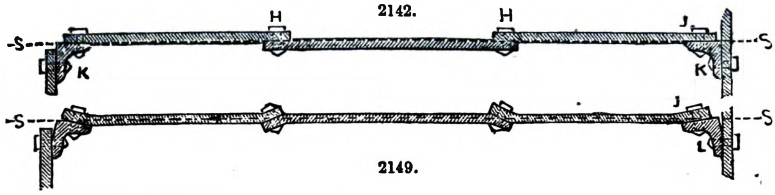

2149.

stantly upon them, it becomes very serious on an exposed raw surface of iron; and this action is particularly severe in the case of locomotive boilers, in consequence of the total quantity of water evaporated in a locomotive boiler being much greater in proportion to the surface of the plates than in stationary boilers. The particulars are given in the accompanying Table of the total work done and water evaporated during the time they were running, by the several locomotives specified; from these particulars 10,000,000 gallons of water may be taken as having been evaporated in a locomotive boiler during the five to eight years in which the plates have become corroded through. As this is nearly double the quantity evaporated in the same time by an ordinary stationary boiler having three times the surface of boiler-plate exposed to the action of the water, the total work of the locomotive boilers may be considered as amounting to six times the evaporation the square inch of plate in the same time, and the total length of working as equivalent, consequently, to from thirty to fifty years' working of a stationary boiler.

2144.

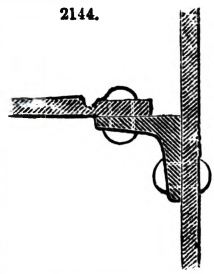

2145.

Grooving at A.

2146.

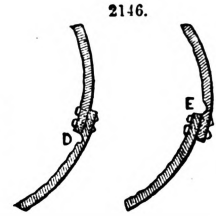

2147.

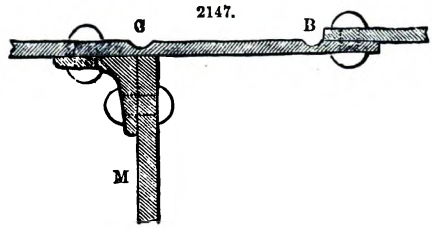

2148.

Grooving at B.

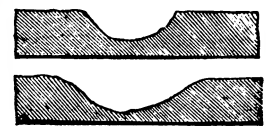

Grooving at C.

PARTICULARS OF LOCOMOTIVES FROM WHICH SPECIMENS OF CORRODED PLATES WERE TAKEN.

Number of Engine.	Years of Working.	Miles run.	Water consumed. Gallons.	Number of Engine.	Years of Working.	Miles run.	Water consumed. Gallons.
99	3	83,349	1,462,774	274	13½	303,249	10,644,039
121	11¾	334,711	5,874,178	306	11¼	229,162	8,043,587
123	12	290,380	5,096,169	306†	6¼	142,808	5,012,560
141	8¼	268,679	4,715,316	369	10½	246,956	8,668,155
162	8¾	255,042	4,475,987	375	3¼	67,072	2,354,227
187	8½	229,099	8,041,374	388	8¼	180,985	6,352,573
235*	14	315,227	11,064,467	410	6¾	158,801	5,573,915
250	14¾	316,391	11,105,324	422	8½	231,035	8,109,328
255	14	293,559	10,293,920	658	18¾	249,672	4,381,743

* Flanged tube-plate.

† After renewal with thick-edge plates.

It must be noticed that the pressure under which the locomotive boilers are worked is much higher than in the case of stationary boilers, and the injurious action caused by the springing of the plates at the joints is therefore proportionately increased; and taking the pressures at 35 lbs. the inch for the stationary boiler and 140 lbs. for the locomotive, this makes the action four times greater in the locomotive boiler from this cause, taking the increase to be only at the same rate as the increase in pressure. Hence as the action is six times greater from the previous cause, a total is given of twenty-four times as great an extent of injurious action in the locomotive boiler as in the stationary boiler in the same length of time. As an illustration of the effects of increased pressure in increasing the corroding action, it may be mentioned that this grooving of the plates has been found to be materially increased in amount since the working pressure of locomotives has been increased from 100 lbs. up to the present 140 lbs. the inch.

In some of the older classes of locomotive engines Kirtley found that there is an increased local action of serious amount caused in the boilers by the rigid points of attachment to the boiler barrel, such as frame-stays, brackets, and so on, which offer special points of resistance to the expansion of the boiler when under pressure. A specimen of this grooving, taken from No. 187 engine in the preceding Table, is shown at C C in Figs. 2147, 2148, caused by the rigid attachment of the spectacle bracket M to the boiler barrel. The result is made worse when the fire-box is rigidly fixed to the frames, or not allowed full freedom for expansion by the provision of a sliding bracket; as a great additional strain is thereby thrown on the tube-plate, springing the angle-irons round the ends of the boiler. The expansion of a 10 ft. 6 in. or 11 ft. boiler barrel being about $\frac{3}{16}$ in. at a pressure of 140 lbs. the inch, an attachment to the frame at any other place besides the fixing of the cylinders and tube-plate at the front end must subject the boiler to a bending strain at the points of attachment, causing a risk of corrosion at these points. In the Midland Railway engines all the other attachments except the smoke-box angle-iron are now removed, including that of the motion-plate which carries the inner ends of the slide bars; and the boiler is allowed in expanding to slide freely throughout upon the frames.

In the longitudinal joints of the boiler the grooving from corrosion is generally found to be more marked when the inside edge of the lap faces upwards, as at E in Fig. 2146, than when it is turned downwards, as at D. In the former case it may be considered that the deposit will collect upon the projecting ledge in larger quantities, forming a thickness of deposit sufficient to be detached bodily by the springing of the plate under pressure; and it will consequently leave the bare plate more frequently and extensively exposed to the direct action of the water, than when the edge of the plate faces downwards, as at D, because in the latter case the thinner film of deposit will not be so readily and frequently detached from the plate by the same action. It must be borne in mind that the earthy deposit itself, being chemically neutral, cannot have any injurious action upon the plate; except in the case of a stationary boiler heated from an external flue, where undue heating and expansion of the plate are caused wherever its inner surface is separated from the water by any considerable thickness of non-conducting deposit.

In the preceding Table are given the particulars of seventeen locomotives on the Midland Railway, from which the specimens of corroded plates were taken; showing the length of time of working, and the mileage and consumption of water before the plates had become so defective as to require removal. The average result is, $10\frac{1}{4}$ years' working, 255,645 miles run, and 7,618,778 gallons of water consumed by each engine.

In the case of the boilers constructed in the ordinary manner, as already described, the plates cut out show the grooving action of the corrosion below the water-line, while they are comparatively clean above. In No. 235 engine the tube-plate was flanged and riveted inside the boiler barrel; and the result of working shows the advantage of this mode of construction over the ordinary angle-iron joint, since the plates at the smoke-box end are not grooved along the edge of the flange, as they would have been with an external angle-iron.

From the foregoing consideration of the subject, observes Kirtley, it therefore appears that the special corrosion of the plates at the joints is to be attributed to the combined operation of chemical and mechanical causes, the chemical action of the water in the boiler being concentrated upon those particular parts in consequence of the mechanical action produced at those parts by the strain upon the plates. That the combination of these two causes is requisite for producing this effect is shown by the middle of the plates being free from it, where they are exposed to the chemical action alone, without the mechanical action; and further by the joints in the upper part of the boiler above the water-line being also free from it, where exposed to the mechanical action alone, without the chemical action. The removal of one of these causes will therefore be sufficient; and in the locomotive boilers now to be described this object has been aimed at by removing the mechanical cause which produced the springing of the plates at the joints.

From the particulars already given of the corrosion which takes place in locomotive boilers, it appears that the greatest injury takes place at the smoke-box end of the barrel, where there is not only a great and sudden change in the thickness and rigidity of the plates at the edge of the angle-iron, as at J in Fig. 2142, but also a leverage for the springing of the plate from the outer line of rivets, as at L in Fig. 2149. The consequence is the bending of the plate at the point J, as in Fig. 2149, each time of being under pressure of steam, owing to the outer line of rivets L being entirely outside of the line of strain S of the boiler-plates. There is also a great tendency to injury of the angle-iron, by this action tending to split it between the rivet-holes at the outer line of rivets L.

The present plan adopted on the Midland Railway is found to obviate the injury previously experienced from corrosion; and this is accomplished by the use of plates rolled with thickened edges, as shown in section in Fig. 2150, and shown exaggerated in thickness in Figs. 2151, 2152. The ordinary thickness of $\frac{7}{16}$ in. is preserved in the body of the plate, and the edges are thickened to $\frac{5}{8}$ in., with a long gradual taper in the thickness from I to I, Fig. 2150, about 4 in. long. The effect of this long taper is that, when the plate is flanged, as at N, in order to do away with the angle-iron,

the taper ensures a gradual springing of the plate, distributed over all that length, instead of the sudden bending concentrated at one point, as at J in Fig. 2149.

2150.

2151.

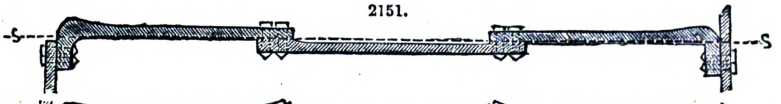

2152.

A similar section of thick-edge plate is also used at the transverse circular joints, as shown in Figs. 2151, 2152, causing a gradual springing of the plates over a considerable length when under pressure, as in Fig. 2152, instead of the former sudden bending at one point, as in Fig. 2149. There is also an increased strength gained by this mode of construction, as the increased thickness of the plates between the rivet-holes compensates for the loss of section by the holes.

The practical working of the thick-edge plates is shown by the specimen No. 306 engine in the preceding Table. The original boiler of this engine, constructed in the ordinary manner, was removed after 11¼ years' working, as the plates were much grooved and pitted; and a new boiler, constructed with the thick-edge plates, was substituted, which has continued at work 6¼ years. It was then found that the plates were free from grooving, although they were badly pitted.

A consideration of the ordinary construction of locomotive boilers and their defects shows that their construction admits of important improvement in the barrel, by removing the injurious strains resulting from the employment of lap-joints, which throw the plates out of the line of strain, and by making the barrel truly cylindrical and circular throughout. These objects are effected by welding the longitudinal joints of the three rings forming the boiler barrel, and making these rings all exactly the same diameter, uniting them to one another with flush butt-joints. This plan is now carried out upon the Midland Railway, as shown in Figs. 2153 to 2155, and exaggerated in thickness in Fig. 2156. The meeting ends of each ring are turned in a lathe, and united by covering strips O O, formed of welded flush rings, shrunk on over the joints and double-riveted. Strengthening hoops P P are also shrunk on the centre of each of the plates, crossing the longitudinal welded joints, and are secured by a few rivets. These hoops and covering strips for the joints are carefully blocked before being shrunk on, and the whole of the rivet-holes are drilled after the hoops are in their places.

2153.

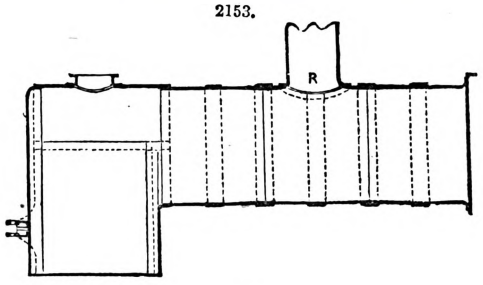

2154.

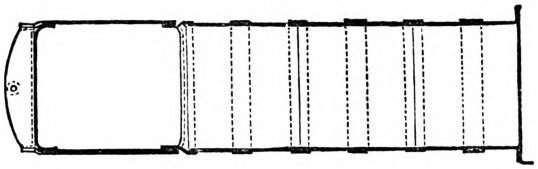

2155.

These boilers are consequently truly cylindrical at all parts, and no strain to which they are subjected has any tendency to change their circular form. The effect of the longitudinal strain upon the transverse circular joints, as in Fig. 2157, is found to be altogether inappreciable in practice, because the covering rings O O could not yield to it without contracting in circumference in the form of a double cone, Fig. 2157; and on this account, together with their greater thickness, they offer a greatly increased resistance as compared with simple lap-joints. All possible effect of the longitudinal strain might indeed be entirely got rid of, if desired, by the further addition

2156.

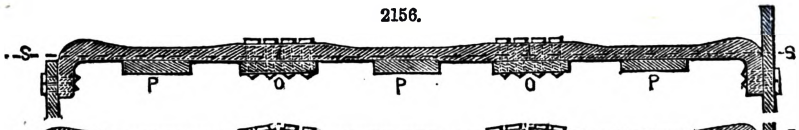

2157.

of inside covering strips at the butt-joints, as shown in Figs. 2158, 2159. At present the circular plates of these welded boilers are in two semicircular segments for the circumference of the boiler, and therefore require two welds; but Kirtley thinks the barrel of the boiler would be improved if

each length were made of one plate only, whereby only one longitudinal weld would be necessary.

2158.

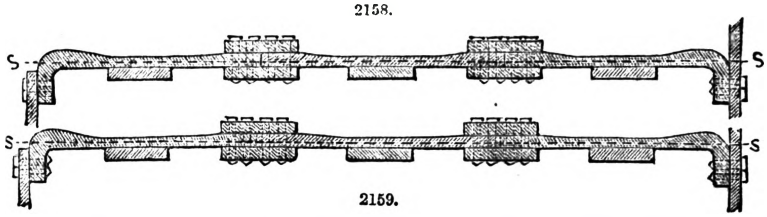

2159.

A remarkable corroboration of the correctness of this mode of construction is given by the samples, No. 658 engine, the boiler of which was constructed with butt-joints all flush throughout, the transverse joints being covered by external hoops and the longitudinal joints by internal strips. This boiler has been at work nearly nineteen years, having been started in 1847; but the engine being of smaller size than those now used with trains, has only been employed as a spare engine for some years past. The plates of the boiler, which are the original ones and have never been repaired at any part, are all good, and the grooving has not taken place at the butt-joints, a little irregular pitting alone being visible on the inside of the plates. The boiler has now been cut up only on account of the engine being abandoned from the great length of time it has been worked. The remarkable contrast shown by the freedom of the butt-joints in this boiler from the grooving so universal with the lap-joints in the ordinary boilers appears only to admit of being accounted for by the difference of construction of the joints in the two cases. In another engine of the same class, which was last broken up, after attaining the maximum mileage of 343,000 miles, the boiler-plates were very badly grooved at the angle-iron joint at the smoke-box end, showing that this part of the boiler remained as defective as in the ordinary boilers, the construction being the same as regarded this joint; while the rest of the joints being butt-joints were free from the grooving.

The flanging, bending, and welding of the thick-edge plates for forming the boiler barrel are performed by the aid of machines specially designed for the purpose, which are shown in Figs. 2160 to 2172.

The Flanging Machine is shown in Figs. 2160 to 2162. It consists of a horizontal table A, on which the thick-edge plate, shown black, having been previously heated, is laid and secured by

2160.

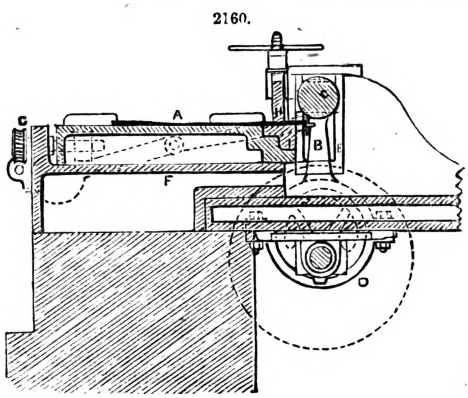

2161.

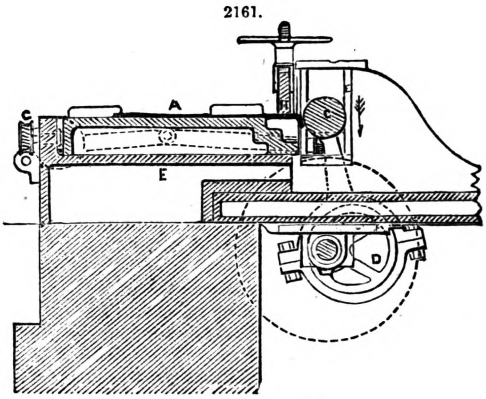

2162.

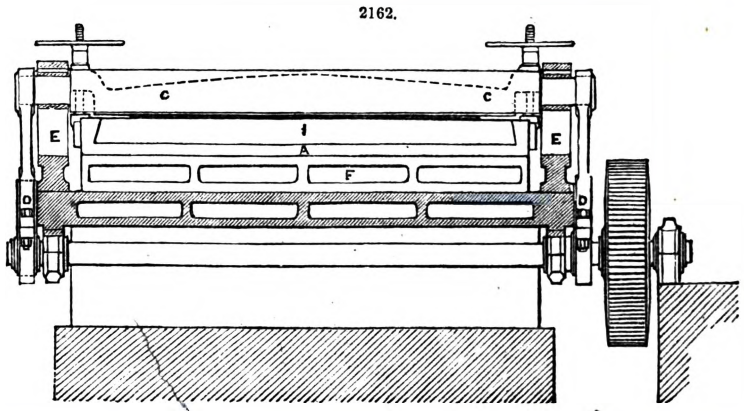

clamps, being pushed forwards against the adjustable stop B, Figs. 2161, 2162, so that the thick edge projects beyond the edge of the table to the required extent for forming the flange. The

roller C is then brought down with a slow motion by the eccentrics D, as shown in Fig. 2161, being firmly held by guides E at each end in the frame of the machine; and the edge of the plate is thus gradually bent down to form the flange. The table A is made to slide upon the bed F of the machine, and is set up by adjusting screws G to the required amount of clearance from the bending roller B, according to the thickness of the plate to be flanged. The front edge of the table is faced with a separate wrought-iron or cast-iron edge-piece I, which can be removed and changed for another having a different curve for the edge, according to the curve that is desired in the neck of the flange. The holding-down bar H is screwed down tight upon the plate, immediately behind the edge of the table, so as to hold the plate down flat on the table while the flange is being bent by the roller. The working speed of this machine is seven double strokes per minute.

The Bending Machine, for bending the thick-edge plates into the semicircle to form the boiler barrel, is shown in Figs. 2163, 2164. It consists of three horizontal rollers, of which the two lower ones

2163.

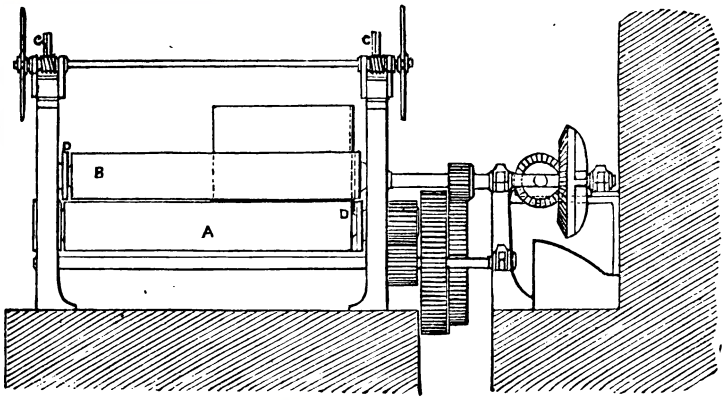

2164.

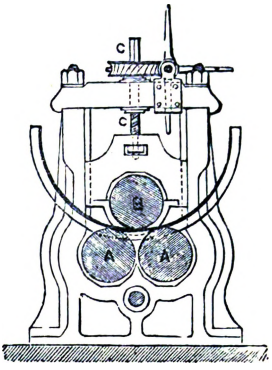

A A are carried in fixed bearings at each end in the frame of the machine; while the third roller B slides vertically in the frame, and is lowered by the screws C C at each time of passing the plate through the rolls, to give the required degree of curvature to the plate. The screws C C were at first worked by hand, but are now driven by gearing from the main shaft. As the thickness of the body of the plate is only $\frac{7}{16}$ in., while the thickness of the edges is $\frac{5}{8}$ in., a liner-plate, $\frac{3}{16}$ in. thick, is laid over the body of the boiler-plate in the bending process, in order to make up the same thickness of $\frac{5}{8}$ in. throughout for passing through the rolls; and the liner-plate is afterwards flattened again ready for subsequent use. At one end of each of the lower rollers A A is a groove D to receive the flange of the plate; this groove is shown enlarged in Fig. 2165, and is formed by a glut-piece or ring E, screwed upon the roller-spindle F and tightened by a set screw G, by means of which the width of the groove can be increased or diminished according to the thickness of the flange of the plate. A corresponding groove is provided at the opposite end of the upper roller B, to allow of bending plates with the flange inside instead of outside. In order to obtain a sufficient hold upon the plate to pass it through the rolls, the surfaces of all the rollers are fluted longitudinally with shallow flutes at $1\frac{1}{4}$ in. pitch, as shown in Fig. 2165, and enlarged to half full size

2165.

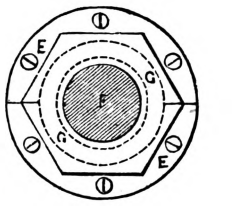

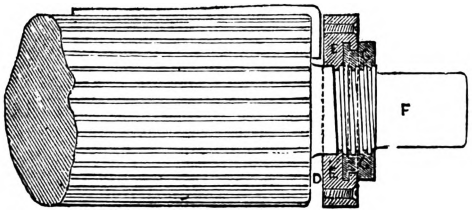

2166.

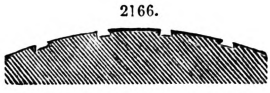

in the section, Fig. 2166. The lower rollers only are driven by gearing, the upper roller being merely a pressing roller for giving the required curvature to the plates, and weighing about 25 cwt. The working speed of the rollers is three revolutions a minute, or about 12 ft. a minute speed of surface.

The two semicircular plates are then welded together into a single ring, to form one length of the boiler barrel. The edges to be welded are first heated in the fire at A, Fig. 2167, and upset sufficiently to give the required thickness of metal for forming the scarf weld. A welding heat is then taken on a short length of the joint of the plates, and the plates B are welded together along the joint upon the welding anvil, shown in Figs. 2167, 2168. The anvil-face C is shaped to the internal diameter of the boiler barrel, and is separate from the pedestal D of the anvil, so that it can he exchanged for other sizes of face, according to the diameter of the boiler. During the heating and welding, the plates B are held in the circular frame E, in which they are securely clamped; and the frame E being slung from a crane, the plates are readily handled. The two ends of the joint are first tacked together by welding, to secure the correct diameter of barrel, and the joint is then welded in short lengths from the centre towards each end.

The rings of the boiler barrel, when welded up, are blocked, to test them by stretching and bring them to the diameter of the boiler. For this purpose the rings are first heated in the

2167.

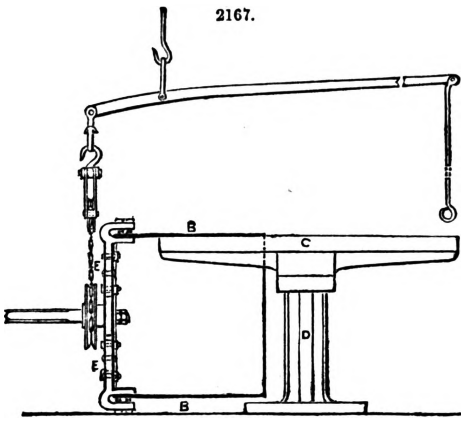

2168.

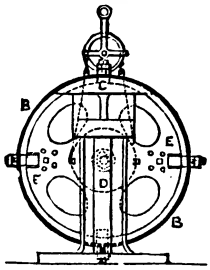

blocking furnace shown in Figs. 2169, 2170, having the fire-grate A under the centre, with six chimney-flues C C round the circumference. The ring B to be heated is put in from the top, and placed on end, with the heat from the fire passing up through the inside of the ring and then down all round the outside to the flues, so as to give a uniform heat to the ring.

2169.

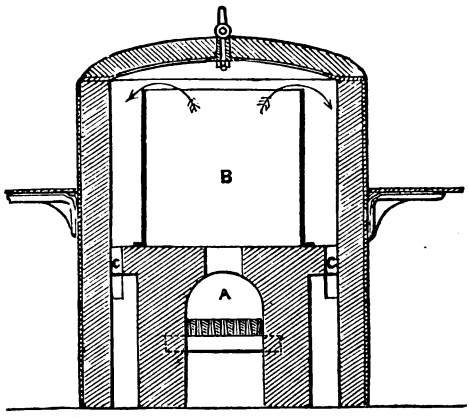

2170.

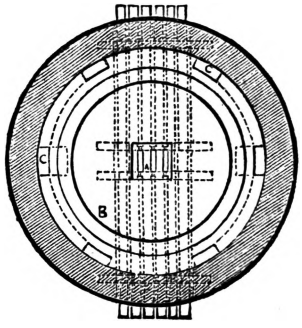

The ring is then put on the blocking press, shown in Figs. 2171, 2172; which is an ordinary hydraulic wheel-tire blocking press, worked by a centre cone D forcing out the blocking segments

2171.

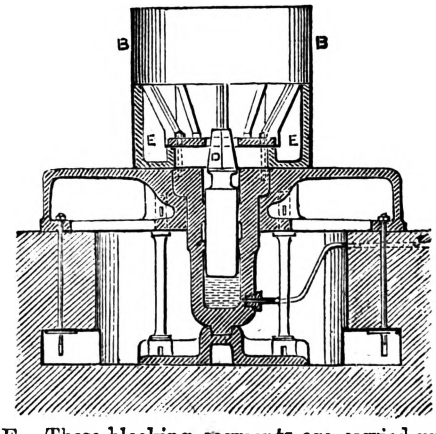

2172.

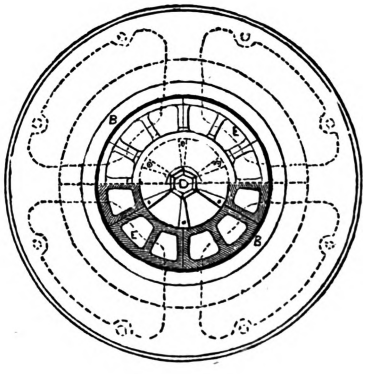

E E. These blocking segments are carried up for the purpose and strengthened by brackets, as shown in the drawing. One half of the height of the ring B is blocked at once; and the ring is then turned over for blocking the other half.

The welded joints of these boilers have been tested by a series of experiments upon the tensile strength of strips of plate cut out across the weld, which were taken from several boilers from the

opening cut out for the steam dome R, Fig. 2153. Three sets of strips were tested, of 1, 1⅜, and 1½ in. width respectively, and each 7½ in. length, cut out of the plate transversely to the weld, which was in the middle of each piece. The following was found to be the average breaking strength a sq. in. of these strips;—

EXPERIMENTS TO TEST STRENGTH OF WELDED JOINTS.

Width of Strips.	No. of Strips tested.	Broke in Weld.	Broke in Solid.	Breaking Strength per square inch.		
				Least.	Greatest.	Average.
inch.				tons.	tons.	tons.
1	15	8	7	16·5	23·8	20·2
1⅜	4	2	2	19·6	22·2	21·0
1½	4	1	3	18·1	23·5	21·7
Total .. 23		11	12	16·5	23·8	**20·6**
Also .. 11 Strips of the same plates *unwelded*..				20·7	25·8	**23·6**

From these results it appears that more than half of the strips broke in the solid and not at the weld, and the average breaking strength of the twenty-three welded plates was within one-eighth of the full strength of the eleven unwelded plates; while the worst pieces, including some cases of as extremely defective weld as are at all likely to occur in practice, had more than two-thirds of the full strength of the unwelded plates.

In reference to the cost of construction of the welded boilers in comparison with the ordinary class of lap-jointed single-riveted boilers with angle-iron ends, it has to be noted that there is an increase of weight of 1¼ ton in the new boilers, the weight of the 11-ft. boilers, 3 ft. 11 in. diameter, being 7¾ tons as compared with 6½ tons in the old class of boilers of the same dimensions. This increase arises from the thick-edge plates, and from the hoops and joint strips, which weigh about 2¼ cwt. each; and the joints, instead of being single-riveted, are double-riveted on each side of the joint, making four rows of rivets.

There have, says Kirtley, been nineteen of these welded boilers in constant use upon the Midland Railway for the last 6½ years, and the result has proved so thoroughly satisfactory that this construction has now been permanently adopted for the engines of this line. Up to the present time (1866) all these nineteen boilers have been examined once, and have been found in good condition; the mileage of each during the 6½ years that they have been running has been equal to about 175,000 miles, and each boiler has had one set of tubes worn out.

Anti-corrosive Paints.—Tarr and Wenson's *anti-corrosive paint* for ships' bottoms consists of a composition made by reducing an alloy of zinc, tin, iron, and quicksilver to powder, and adding to the mass 20 per cent. of white arsenic. This is mixed with a composition of 40 gallons of wood tar, 30 gallons of coal naphtha, and ¾ lb. oxide of iron.

G. W. Morse's paint for ships' bottoms is composed of antimony, 80 parts; lead, 15; cement—copper, 5; naphtha, 1; benzine, 1; and tar, 2.

See BOILERS. CONSTRUCTION, p. 1053. GALVANIZED IRON. INCRUSTATION OF BOILERS. KYANIZING. LOCOMOTIVES. STONE, *artificial*.

COTTER. FR., *Clavette;* GER., *Keil;* ITAL., *Bietta, zeppa;* SPAN., *Costilla.*

A *cotter* is a wedge-shaped piece of wood, iron, or other material, used for fastening the parts of a structure; a key.

COTTON GIN. FR., *Machine à éplucher le coton;* GER., *Reisswolf;* ITAL., *Macchina da nettar cotone;* SPAN., *Desgranadora.*

See COTTON MACHINERY.

COTTON MACHINERY. FR., *Machines à filature de coton;* GER., *Spinnerei Maschinen;* ITAL., *Macchine da lavorare il cotone;* SPAN., *Maquinaria para fabricar algodon.*

John Platt, of Oldham, in a paper printed in the Proceedings of the I. M. E., observes that the process of spinning involves three essential and distinct operations;—

1st. *Drawing*, in which the fibres of the raw material are drawn out longitudinally, so as to lay them all parallel with one another, and overlapping at the ends; as is done by the fingers of the hand spinner for forming a continuous sliver out of the short fibres lying irregularly in the bundle that is tied upon the distaff.

2nd. *Twisting*, in which the sliver previously formed is twisted into a roving or thread, for giving it longitudinal tenacity by increasing the lateral friction between the fibres as is done by the hand spinner by twirling the bobbin on which the portion of thread already twisted has been wound.

3rd. *Winding*, in which each portion of the thread, after it has been sufficiently twisted, is wound upon the bobbin.

In the application of machinery to the performance of these operations, the great difficulties experienced have arisen from the irregular character of the cotton fibre on the one hand; and on the other from the unyielding action of machinery, which has to take the place of the delicate feeling of the fingers in hand spinning, whereby the spinner is enabled to accommodate the action continually to the variations in the material. It is a point of special mechanical interest, however, to note at how early a period in the application of machinery correct ideas were developed as to the principles of action in the important successive steps; so correct indeed that they have

remained unaltered in principle to the present time, although many highly ingenious improvements in detail have subsequently been effected.

In Paul's first machine the raw cotton was passed through a succession of pairs of rollers, each pair running faster than the preceding, so as to draw out the sliver of cotton longitudinally to any degree of fineness required. The machine thus accomplished only the drawing process, leaving the sliver so formed to be twisted and wound afterwards by hand. The great feature of this invention was that the important principle of drawing by rollers running at different speeds was thus established at the outset, to supersede drawing by the fingers in hand spinning; and this mode of drawing has been adhered to ever since as the fundamental principle in the preparation of fibrous materials for spinning.

Paul invented, also, a carding machine, for carding or combing the raw cotton in preparation for the drawing rollers. It consisted of a number of flat parallel cards fixed upon a table with spaces between them; and the teeth of the cards being all bent in the same direction, the cotton was carded by being drawn over them by hand by means of an upper flat carding board set with teeth bent in the opposite direction. In another arrangement this flat upper card was replaced by a horizontal carding cylinder, made to revolve by hand; and the lower carding table was made concave to fit the under-side of the cylinder. When the cotton was sufficiently carded, it was taken off each card separately by hand by a needle-stick, and then connected into one entire roll or lap.

Paul improved his original machine, in 1758, by rendering it capable of performing the two other processes of twisting and winding requisite to complete the operation of spinning by machinery; and he constructed a spinning machine having a circular frame containing fifty spindles. The cotton was drawn by rollers, as in his previous machine, and the sliver was delivered from the rollers to a bobbin upon each spindle, by means of an arm or flier fixed upon the spindle; and the spindle being so contrived as to go faster than the bobbin, the sliver was thus twisted into thread by the flier, before being wound upon the bobbin.

Although the two mechanical principles which have formed the basis of all subsequent spinning machinery—namely, the drawing rollers, running at different speeds, and the differential motion of the flier and bobbin—were thus originated by Paul, it does not appear that his machines were ever practically successful; and Arkwright's spinning machine, in 1769, appears to have the merit of being the first that was brought into successful operation. This machine cannot be called more than an improvement in detail upon Paul's, as the principles of the two were the same; and it is difficult to imagine that Arkwright had not seen Paul's machine. The success of the later machine may be attributed to its superiority both in workmanship and in the material employed, the earlier machine having been composed almost entirely of wood.

In 1770 Hargreaves invented the Spinning Jenny, shown in Fig. 2173, the principle of which is identical with that of the present spinning machinery. It thus presents a remarkable instance

2173.

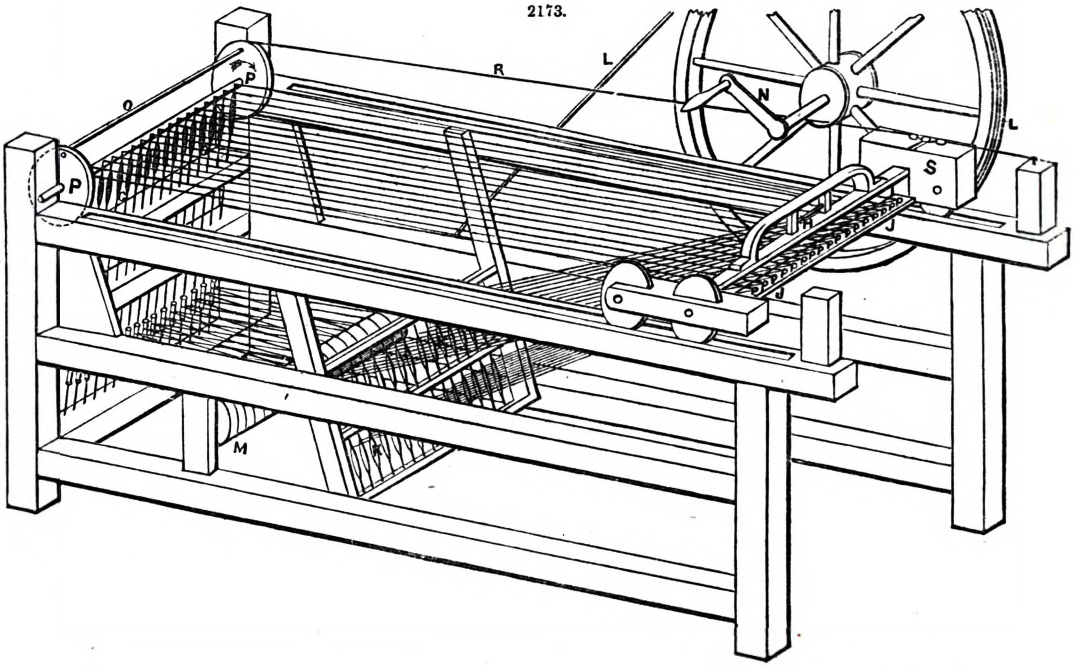

of a correct perception respecting the best mode of working having been attained at so early a stage in the application of machinery to a new purpose. The operation of spinning into threads the rovings produced by the machines of Paul or Arkwright, or by the modern improved machines similar in principle, comprises the two processes of twisting and elongating the roving to form it into a thread, and then winding the spun thread into the form of a cop upon the same spindle by which the spinning or twisting has been performed. These two processes still continue to be effected in essentially the same manner as in Hargreaves' spinning jenny.

The twisting of the thread is effected by causing the spindles G, Fig. 2173, to revolve, as though

for winding up the thread, but allowing the thread to slip off the free end of the spindle once in each revolution. For this purpose the thread is led off from the top end of the spindle at an angle so much greater than a right angle that its tendency to wind in a spiral brings it to the top extremity of the spindle in each revolution, causing it to slip off the end of the spindle at each successive revolution; and the top of the spindle is shaped conical to facilitate the slipping of the thread off the end. The result is that the thread is twisted one turn by each revolution of the spindle, without disturbing or interfering with the portion of spun thread already wound up into a cop on the lower part of the spindle. The cross-bar J, carrying the guiding eyes through which the several threads pass, rests at each end on a carriage that runs along the side framing of the machine; and before the commencement of the spinning by the spindles G, the cross-bar is first drawn backwards from the spindles by hand through about one-third the length of the machine, drawing off a continuous supply of roving from the bobbins K below, which are free to turn on their bearings. The clasp H is then pressed down tight upon the cross-bar J, holding the rovings fast, and the spindles G are set in motion, twisting the lengths of thread between the spindles and the cross-bar; and during the twisting the cross-bar is gradually drawn backwards by hand to the end of the machine, thus producing the required elongation of the threads by tension during the spinning, as is done in the case of hand spinning by the weight of the bobbin or spindle hanging from the twisting thread. The spindles G receive their motion from the drum M driven by the driving pulley L, which is turned with the right hand by the handle N, while the left hand draws back the cross-bar J by means of the handle upon the clasp H.

When the cross-bar J has been drawn back to the extreme end of the machine and the spinning of the threads has been completed, they are then wound up on the spindles by depressing them all simultaneously to the lower portion of the spindles by means of the faller wire O, which is brought down upon the threads by the rotation of the discs P P in the direction of the arrow. The rotation of the discs is effected by tightening the cord R which runs along the side of the machine, and they are turned back again by a counterbalance weight for raising the faller wire when the cord is released; the cord passes round three horizontal pulleys on the top of the carriage S, and is tightened for depressing the faller wire by a transverse sliding movement being given to the middle pulley by means of a hand lever, which is worked by the left hand whilst holding the clasp on the cross-bar J. The threads being depressed by the faller wire, the further rotation of the spindle now causes the threads to be wound up in cops upon the spindles, the sliding cross-bar J being pushed forwards gradually by hand as the winding proceeds, until it again reaches the spindles, when it is ready for beginning the spinning of a fresh length of rovings. During the winding of the threads already spun between the spindles and the cross-bar J, this length of the threads is secured and separated from the untwisted rovings beyond the cross-bar by the pressure of the clasp H, which is kept pressed down tight upon the threads.

On the completion of the spinning, however, of each length of the threads, and before the change can take place from spinning to winding, it is necessary first to unwind the short spiral of thread extending up from the top of the cop previously wound to the top extremity of the spindle. This spiral is unavoidably formed at the commencement of the twisting, before the thread can reach the point where it ceases to wind and begins slipping off the end of the spindle at each revolution; but if this portion of thread were not entirely removed before the faller wire O is lowered at each time of changing from twisting to winding, an irregular and loose accumulation of thread would take place upon the upper end of the spindle, spoiling the form of the cop and interfering with the proper slipping-off action in twisting. The motion of the spindles has therefore to be stopped and reversed for a few turns when the twisting is finished, to unwind these few spiral coils; and this was done in the spinning jenny by the spinner stopping the driving wheel L, and then giving it a partial turn backwards by hand, for backing off the thread before driving forwards again for winding the thread on the spindles.

This backing-off motion and the faller wire are identical with those now in use in the modern spinning machines, the only difference being that they are now made self-acting. In winding the cop each successive layer of thread is so regulated that a conical form is given to each end of the finished cop, in order to prevent the thread from getting loosened upon it at the ends in subsequent handling; while at the same time the crossing of the thread in the alternate spiral layers gives firmness to the cop, and still allows the thread to be afterwards drawn off it, when required for use, either by slipping off the end as in a shuttle, or by unwinding the cop on a spindle. In the spinning jenny this shape of cop was obtained by regulating the winding of the thread by means of the cord R acting upon the discs P P, raising and lowering the faller wire O during the winding so as to guide the thread upon the spindle as required for producing the desired shape of cop. The same shape of cop and mode of guiding the thread on are still adhered to in the present spinning machines; but the whole of the movements are now effected entirely by self-acting machinery.

Further improvements in the preparatory processes of carding and roving were introduced by Arkwright in 1775, which may be said to include the principal features contained in the carding and roving machines now used. The cotton delivered from the preliminary machine was formed into a roll or lap, for supplying a continuous fleece of cotton to the carding cylinders, the carding operation being repeated until the irregular mass of fibres in the raw material had been combed straight and laid parallel in the fleece of cotton with a sufficient degree of uniformity to allow of proceeding to the subsequent operations. Comb-plates worked backwards and forwards by cranks were also added for combing off the cotton in a continuous fleece from the doffer or taking-off cylinder of each of the carding machines. The sliver delivered from the last carding process was passed between a pair of rollers for the purpose of consolidating it by the pressure of the rollers after the loosening action of the doffing comb-plate; and it was then coiled down into a can.

The doubling and drawing process employed at this stage of the manufacture was also introduced by Arkwright at the same time, the object being to intermingle the fibres more completely in the sliver, and thereby render it more uniform in quality, ready for twisting into a roving. For

this purpose two or generally more of the slivers from the carding engine are passed side by side through a series of pairs of drawing rollers, each pair in succession being made to run faster than the preceding; and the last pair of rollers runs as many times faster than the first pair as there are slivers doubled together, so that the single combined sliver delivered from the rollers is drawn down to the same size or weight a foot as one of the original slivers. The doubling and drawing operation is usually repeated three times, and the ultimate sliver so prepared is then ready for the roving frame, in which it is again drawn and twisted and wound upon a bobbin.

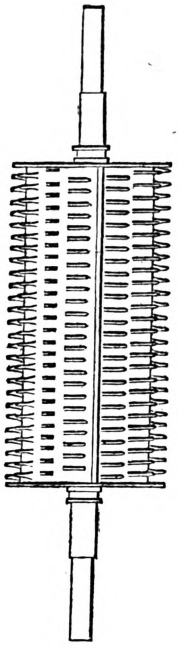

2175.

In the roving frame Arkwright now effected an important advance upon his previous machine, by introducing the new principle, which has since been adhered to, of driving the bobbin and the spindle independently by separate motions, instead of letting the bobbin be simply dragged round by the thread. At the same time he also introduced the conical regulating drum, for reducing the speed of the bobbin in proportion as its diameter was increased by the thickness of the coils of roving wound upon it, so as to avoid increasing the tension upon the roving, as would be the case if the speed of the bobbin were uniform, since the spindle and flier are driven always at a constant speed. This mode of regulating the speed of the bobbin by a conical drum is the same that is still employed in the modern machinery, with modifications only in the mode of application.

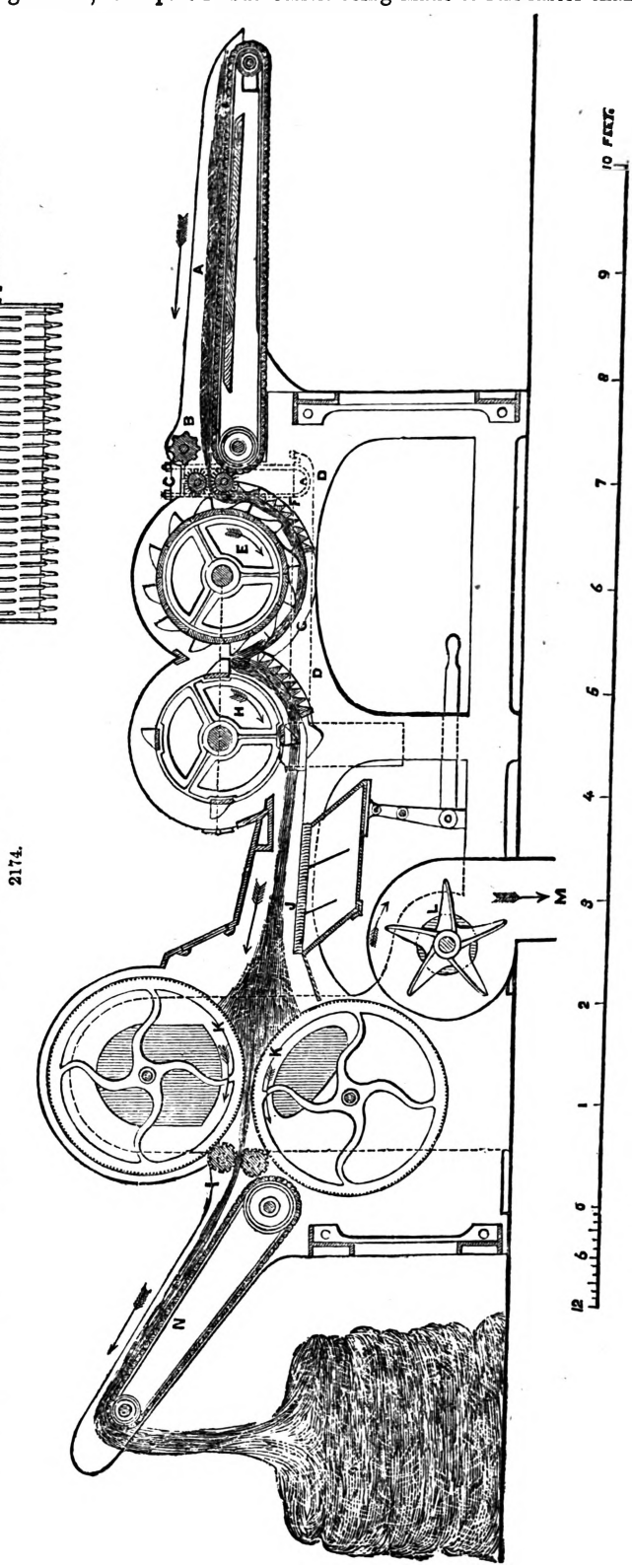

2174.

Opening.—The first process in the preparation of the raw cotton was known as willowing, and took its name from the willow switches formerly used for beating or opening the tufts of cotton by hand. A number of small parallel cords were stretched tight and close together on a horizontal frame, so as to form a sort of table, upon which the cotton to be opened was laid; and the cotton being then beaten with switches made of willow rods kept smooth for the purpose, the fibres of the cotton remained on the cords, whilst the sand and seeds fell through between. Some of the best descriptions of sea-island cotton are still batted in this way, for the finest counts of yarn. Several attempts were made to work the willow-beaters by machinery, but they have all been superseded by opening and scutching machines on the modern

principle, having revolving cylinders to act as beaters. The most primitive of these is known as the Oldham Willow, and has a revolving cylinder about 36 in. diameter, set with spikes placed in parallel rows, and revolving against a grid of bars set with similar spikes; the cotton is fed upon the grid, and beaten for a longer or shorter time, according to its condition, and an exhausting fan is employed for taking away the sand and bits of dried leaves beaten out. This machine is now used only for separating hard lumps of cotton in bales packed too tightly, and for cleaning cotton waste and the refuse cast out by other cleaning machines.

Fig. 2174 shows a section of the Cotton Opener in use at the present time for the purpose of opening out the fibres of the cotton after it has been pressed in the bales, and for extracting the sand, dried leaves, and other impurities imported with it, the object being to do this without entangling or injuring the fibre. The crude cotton from the bales is spread by hand upon the endless travelling lattice A, which conveys it underneath the iron guide-roller B with longitudinal ribs on its surface to the pair of fluted feed-rollers C. These are pressed together by the weighted lever D, and deliver the cotton to the picker-cylinder E, set with twelve rows of teeth, which are spaced so that the teeth follow one another spirally round the cylinder, as shown in the plan, Fig. 2175. The tufts of cotton being gripped tight between the rollers C are caught by the tips of the teeth on the cylinder revolving in the direction of the arrow, and are thus torn open and dashed by the teeth against the circular grid F, formed of angular bars set with spaces between them, which allow the dirt disengaged by the beating action to fall through. A perforated plate G forms the remainder of the casing of the cylinder on the under-side, allowing the dust to drop through while the cotton passes over it. The picker-cylinder delivers the cotton against the teeth of the beater H, which has four rows of teeth, similar to those on the picker E. Here the cotton is further beaten and passed over a circular grid and perforated plate; and the beater-cylinders being covered in at the top by a sheet-iron casing, the current of air produced by their revolution wafts the light fleece of cotton forwards over the straight grid J. It is whilst the cotton is thus floating in the air that the heavier impurities, loosened by the beaters, drop out and fall through the grid J into the dust-box. The cotton then passes between the two wire-gauze cylinders K, which serve as fine sieves, the interior of the cylinders being exhausted by the fan L; by this means the more minute particles of dust remaining in the cotton are sifted out, and discharged by the fan through the aperture M, thereby keeping the rooms where the machines are at work perfectly free from dust. There is thus a continual deposit of impurities taking place throughout the whole passage of the cotton through the machine, from the feed-rollers C to the wire cylinders K. In the drawing, only two beater-cylinders E and H are shown; but the machines are more generally made with four cylinders, for cleansing the cotton more effectually, the two additional beaters being provided with four rows of teeth, the same as the second cylinder H. From the wire cylinders the loose cotton is collected again and consolidated into a fleece by the fluted stripping rollers I, running close to the cylinders K, but not touching; and these deliver it to the travelling lattice N, which discharges it ready to be taken to the next process of scutching, a lap machine being sometimes attached, so as to form the fleece into a lap or roll for supplying the scutcher. The beater-cylinders E and H run at about 1000 revolutions a minute; the feeding lattice A travels at 6 ft. a minute, which is also the surface speed of the feed-rollers C; and the surface speed of the wire cylinders K, the stripping rollers I, and the delivery lattice N, is 60 ft. a minute.

Scutching.—The Scutching Machine now in use for further beating and cleansing the cotton delivered from the opener is shown in Fig. 2176, having also combined with it the Lap Machine for forming the fleece of cotton delivered from the scutcher into a roll or lap. The cotton from the opener is supplied to the scutcher upon the travelling feeding lattice A, and in order to produce a uniform fleece for the further processes, it is necessary at this stage to regulate the quantity fed into the scutcher, which is effected in two ways. In feeding by hand the tedious method of weighing the cotton supplied has to be resorted to, so as to distribute a uniform weight of cotton over each foot of length of the feeding lattice, which together with the feed-rollers C is driven at a uniform speed. But in the improved mode of feeding by laps B, supplied from a lap machine in connection with the opener, the top feed-roller is allowed to rise and fall, according to the variations in the thickness of cotton fed in, and the amount of its vertical movement multiplied by means of levers is employed to regulate by a self-acting arrangement the speed at which the feeding lattice and rollers are driven. By this means an almost uniform supply of cotton is fed to the beater H, which is composed of three plain bars, as shown in the plan, Fig. 2177, and is driven at about 1250 revolutions a minute. The cotton is beaten, as before, against the circular grid F and perforated plate G, and the current of air from the beater wafts it forwards over the straight grid J to the wire cylinders K, exhausted by the fan L, the action being exactly the same as in the opening machine. The rollers I, which strip the dust-cylinders, deliver the fleece to a set of four callender rollers O, placed over one another, so that the cotton in passing through them receives three compressions, which consolidate it into a kind of felt; the surfaces of the callender rollers are kept clean by rubbers of iron covered with flannel, which are pressed in contact with them.

The Lap Machine, for coiling the fleece into a roll or lap, has two fluted driving rollers P P running in the same direction, as shown by the arrows; and the lap, resting in the channel between them, is driven by contact, and wound upon the iron rod R, guided in a vertical groove at each end. For tightening and closing the coils of the lap, the rod R was weighted in the former machines by a heavy weight suspended from the ends of the rod, and it was then necessary to lift the whole of this weight at each time of changing the lap; but this is now effected by the friction brake S pressing against a friction wheel on the shaft T, on which are pinions gearing into the vertical racks U, and these racks carry rollers at the top, bearing down upon the ends of the rod R in the lap. By this means, as each successive coil is wound upon the lap, the brake S slips and allows the lap to rise; and when the lap is completed, the brake is released by a treadle, and the

racks are lifted clear by the hand-wheel on the shaft T, so as to allow the finished lap to be removed. The driving pinion V, from which the callender rollers O receive their motion, is held up in gear by the lever W supported by a catch; and when the lap is finished this catch is released by a tappet upon the pinion X, which is driven from the bottom callender roller, the speed of the pinion being so reduced that one revolution of it corresponds to the size of lap required to be made. The catch being released allows the driving pinion V to fall out of gear, whereby the callender rollers O are stopped; and the lap-rollers P continuing to revolve, break off the fleece, ready for removing the finished lap from the machine. By changing the pinion X, carrying the tappet, the size of lap made by the machine can be varied as desired.

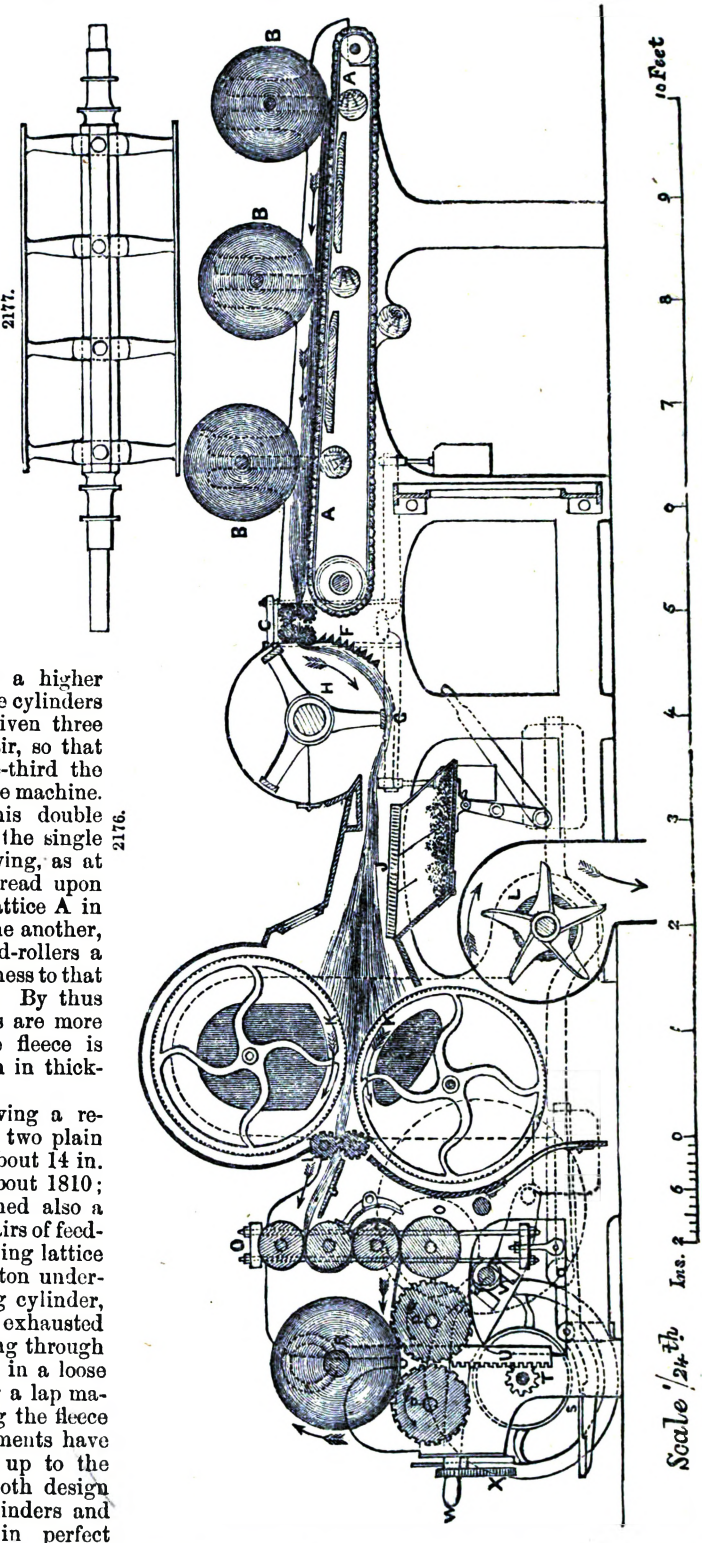

The scutcher shown in Fig. 2176 is a single machine, and it is usual to pass the cotton first through a double scutcher of similar construction, but having a second set of feed-rollers with beater and wire cylinders, running at a higher speed; the second pair of wire cylinders and stripping rollers are driven three times as fast as the first pair, so that they deliver a fleece of one-third the thickness first supplied to the machine. Three of the laps from this double scutcher are then fed into the single scutcher shown in the drawing, as at B B B, Fig. 2176, being spread upon the surface of the feeding lattice A in three layers on the top of one another, so as to present to the feed-rollers a uniform fleece equal in thickness to that fed into the first scutcher. By thus doubling the laps the fibres are more thoroughly mixed, and the fleece is thereby made more uniform in thickness.

Scutching machines having a revolving beater, composed of two plain bars describing a circle of about 14 in. diameter, were introduced about 1810; and these machines contained also a travelling feed-lattice, two pairs of feed-rollers, and a second travelling lattice for conveying the beaten cotton underneath a perforated revolving cylinder, the interior of which was exhausted by a fan. The cotton passing through this machine was delivered in a loose fleece, and a few years later a lap machine was added for coiling the fleece into a lap. Other improvements have gradually been introduced up to the present time, as regards both design and workmanship; the cylinders and beaters have been put in perfect balance so as to revolve steadily at the high speed required, and the forms of teeth on the cylinders have been arranged for greater strength and greater facility of construction; stronger and simpler gearing has been employed, improvements have been made in the form and construction of the bearings of the beaters and other quick revolving shafts, so as to ensure more efficient lubrication,

and air-tight dust boxes have been added with movable doors for facility of cleaning; and the self-acting arrangements have been introduced for stopping the machine when a given length of fleece has been delivered, and for regulating the rate of feed according to the thickness of the cotton supplied, so as to dispense with the previous plan of weighing the cotton in feeding. Thus by successive improvements through a long series of years the difficulties which originally presented themselves in the successful adaptation of machinery to cotton cleaning have been overcome.

Carding.—In the carding process the felted fleece delivered by the lap machine of the scutcher, with its fibres crossed in all directions, is combed out a great number of times so as to straighten the fibres; and the light impurities still adhering to it are taken out, such as short fibres and bits of the moss-like covering of the seeds, which if allowed to remain in the sliver produced by this operation would give a roughness to the yarn. For making coarse yarns one carding process only is employed; but for finer yarns the fleece is first passed through a breaker carding engine, which performs the first rough carding, and the slivers delivered by this are then doubled by laying together a large number of slivers, side by side and overlapping one another, into a new fleece, so as to obtain sufficient thickness and breadth of material to allow of a further carding; and the lap formed of this new fleece is then fed into a second or finisher carding engine. As many as ninety-six slivers from the breaker card, each drawn out of a separate can, are laid together by the doubling machine into a single fleece for the supply of the finisher, in order that the mixing of the cotton may be more thoroughly effected, and more perfect uniformity ensured in the sliver delivered by the finisher. For the finest qualities of yarn the finisher card is itself used as a breaker, and the sliver delivered by it is afterwards combed by a combing machine.

The Roller and Clearer Carding Machine employed at the present time as a breaker card for performing the first carding of the fleece is shown in section in Fig. 2178, and consists of a main carding cylinder A, round which are arranged a series of pairs of carding rollers or workers B B and clearing rollers or strippers C C. The surfaces of all these are covered with cards, and they are made to revolve so close together as to allow the tips of the card teeth just to clear one another. The cards are a kind of wire brush with inclined teeth, as shown full size in Fig. 2179, and are made of staples D of fine steel or iron wire, each about $\frac{3}{8}$ in. long and $\frac{3}{16}$ in. wide, with a side bend in the middle of their length. These are fixed close together into a strip of webbing about $1\frac{1}{2}$ in. wide, which is wound tight round the cylindrical rollers in a continuous spiral, keeping the staples pressed home in the cloth by the surface of the cylinder, so that they have an elastic firmness which keeps their points up to the work.

The working width of the machine is about 40 in. on the card teeth, corresponding with the breadth of the fleece in the lap E by which the carding engine is fed. The unlapping of the fleece is performed by the rollers F on which the lap rests, and the fleece is then drawn forwards under the feed-roller G, and delivered to the taker-in roller H revolving in the direction of the arrow. At this point the carding or combing action commences, the fleece being held by the feed-roller G travelling at the slow speed of only about $\frac{3}{4}$ ft. of surface a minute, while the taker-in H runs much faster, at about 800 ft. a minute surface speed; and the carding teeth on the taker-in being bent forwards in the direction of motion, the points of the teeth strike down into the fleece held by the feed-roller, and comb out the fibres, while the impurities separated fall to the ground. The fibrous tufts of cotton are carried round on the under-side of the taker-in to the main carding cylinder A, which revolves in the same surface direction with a speed of about 1600 ft. a minute. The teeth of the carding cylinder being bent forwards in the direction of motion sweep off the cotton from the taker-in teeth inclined in the same direction but running at only half the speed, and carry it forwards to the dirt-roller J, the teeth of which face those of the carding cylinder, and travel with a very slow motion of only about 16 ft. a minute. The dirt-roller thus assists in combing out the fibres, and holds in the interstices of its wires any impurities that it receives from the cotton, which are carried forwards and stripped from it by a vibrating comb, so that they accumulate in a roll on the upper surface of the dirt-roller, to be taken away by hand at intervals.

The carding cylinder then carries the cotton forwards to the several pairs of workers and strippers, one of which is shown to a larger scale in Fig. 2180; and at each pair in succession the fibres undergo a further combing out and straightening. The motion of the teeth of all these pairs of rollers is in the same direction as that of the adjacent teeth on the main carding cylinder, as shown by the arrows in Fig. 2180, but at a much slower speed; and the teeth of the strippers C are inclined forwards in the direction of motion, while those of the workers B are set the opposite way so as to present the points of the teeth facing those on the carding cylinder A. The cotton on the carding cylinder is therefore carried past the stripper C without being caught by its teeth, and is caught upon the teeth of the worker B running at only about 20 ft. a minute, so that a combing action for straightening the fibres and dividing the tufts of cotton is obtained by the excess of speed in the carding cylinder running at the high velocity of 1600 ft. a minute. All fibres failing to pass the worker B are carried round upon its teeth to the stripper C, which runs at a surface speed of about 400 ft. a minute, being thus intermediate in speed between the slow worker B and the quick carding cylinder A; the teeth of the stripper therefore sweep off the cotton from the worker, and are themselves stripped in the same way by the carding cylinder running at the higher speed. After passing the six pairs of workers and strippers, the fleece of straightened fibres is taken off in a continuous sheet from the carding cylinder A by the doffer K, the teeth of which face those of the cylinder and move in the same direction but at a much slower speed of only about 65 ft. a minute; the fleece thus receives a further straightening and stretching in quitting the carding cylinder, and is carried round on the under-side of the doffer to the vibrating comb I, which describes a short arc of $1\frac{1}{4}$ in. vertical motion and is driven by balanced cranks at about 800 double vibrations a minute. This comb strips the fleece from the face of the doffer in its down-stroke and clears itself in rising; and the thin fleece, of the full width of the machine, 40 in., is then gathered in by lateral guides to a width of 6 in., and finally into a smooth bell-mouthed round funnel L, having a hole only $\frac{1}{2}$ in.

diameter, through which the contracted ribbon or sliver is drawn by the two pairs of drawing rollers M, the second pair running one-half faster than the first, whence it passes to the coiler N and can O.

The coiler consists of a revolving plate N having an eccentric aperture, through which the

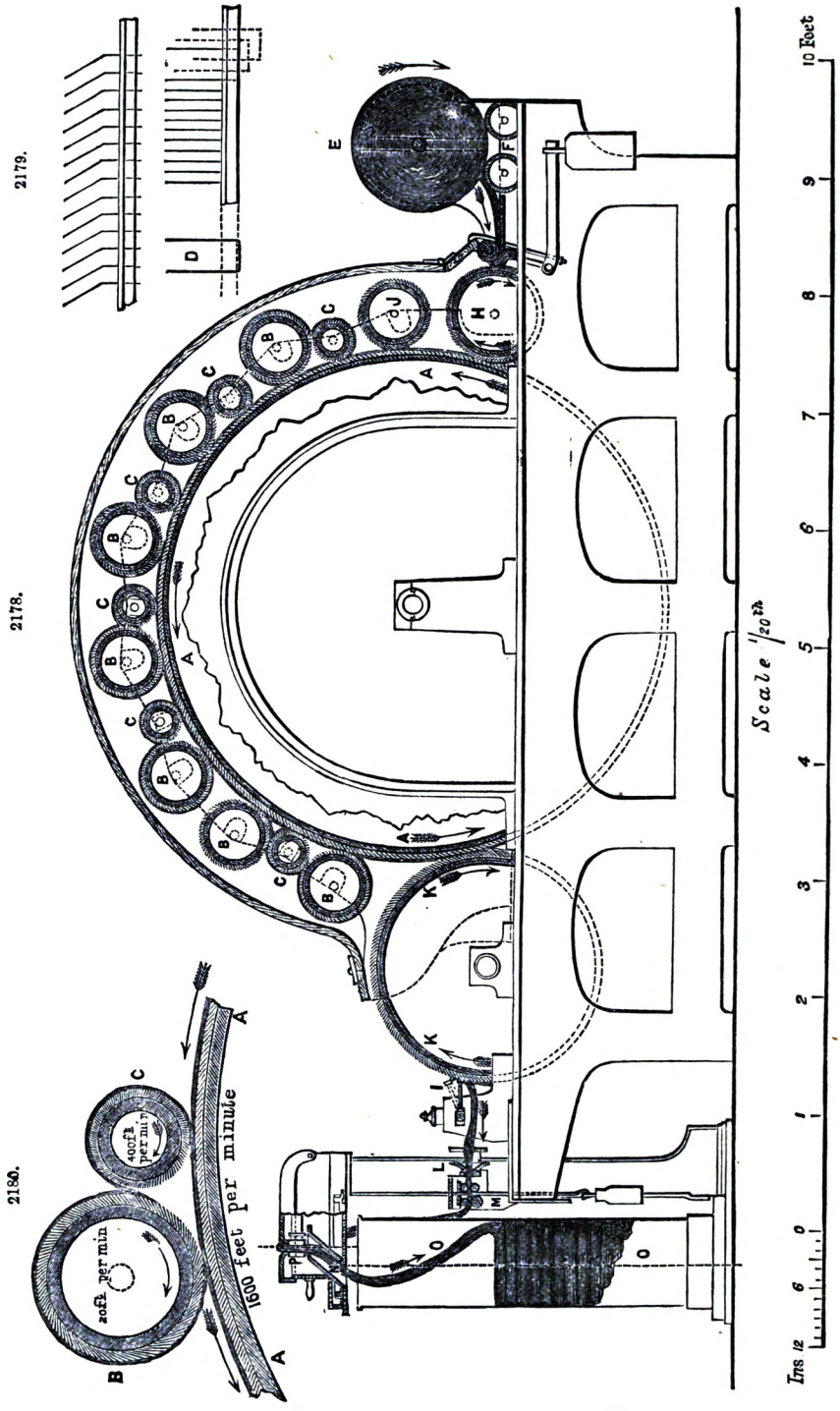

sliver is passed from the pair of rollers P above the plate, so that it is delivered into the can in circular coils. The can O, however, is also made to revolve with a slow motion in the opposite direction to the coiler, and the centre line of the coiler N is eccentric to the axis of the can, whereby the sliver delivered from the coiler describes a succession of hypocycloid curves in the can, the circles of sliver being laid into the can so that the outsides of the coils touch the inside of the can.

The sliver thus forms coils continually crossing one another, so that the can is filled up solid throughout, and when taken to the doubling frame the coils of sliver come out again without adhering to one another.

The Flat Carding Machine employed at the present time as a finisher card for performing the second carding operation is shown in Fig. 2181; and consists of a main carding cylinder A, as in the breaker card, but the pairs of workers and strippers employed in the first carding are here re-

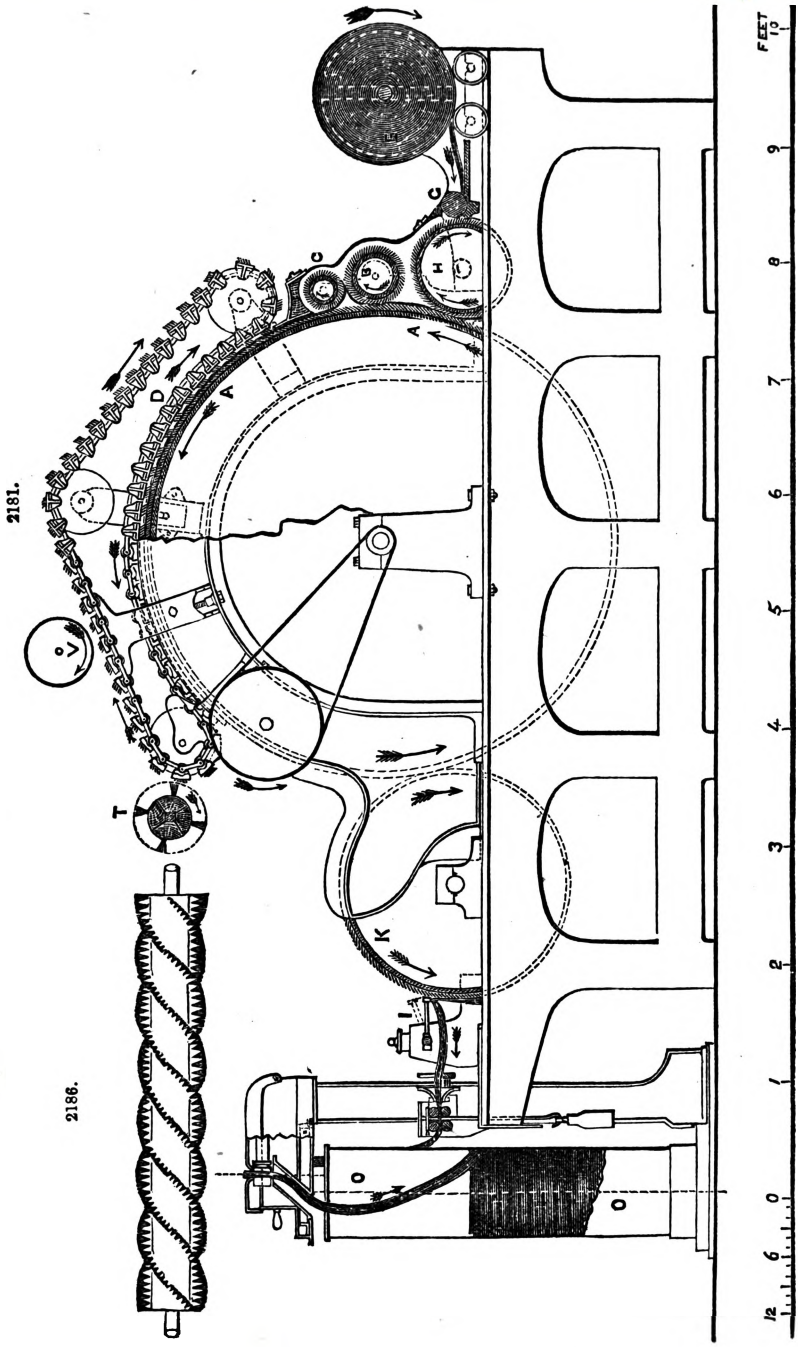

placed by a series of flat cards D D, connected together by links so as to form an endless travelling lattice. The lap E, formed of a number of slivers from the breaker card laid together into a fleece by the doubling machine, is supplied to the carding cylinder A by the feed-roller G and taker-in H, in the same way as in the breaker card; and the carding cylinder A is driven at the same speed of about 1600 ft. of surface a minute. A single worker B, called the fancy roller, with a stripper C, is placed immediately beyond the taker-in H, running in the same direction as the adjacent surface of the carding cylinder A; but in this case the teeth of the fancy roller B are bent forwards in the

direction of motion, and it therefore requires to be driven at a higher velocity than the carding cylinder, and has accordingly a surface speed of 2000 ft. a minute. It thus seizes the cotton from off the teeth of the main carding cylinder A, and throws it against the teeth of the stripper C facing those of the fancy roller · and the fibres having thus been subjected to a preliminary carding are again swept off the teeth of the stripper, moving at only 400 ft. a minute, by the higher speed of the main carding cylinder A.

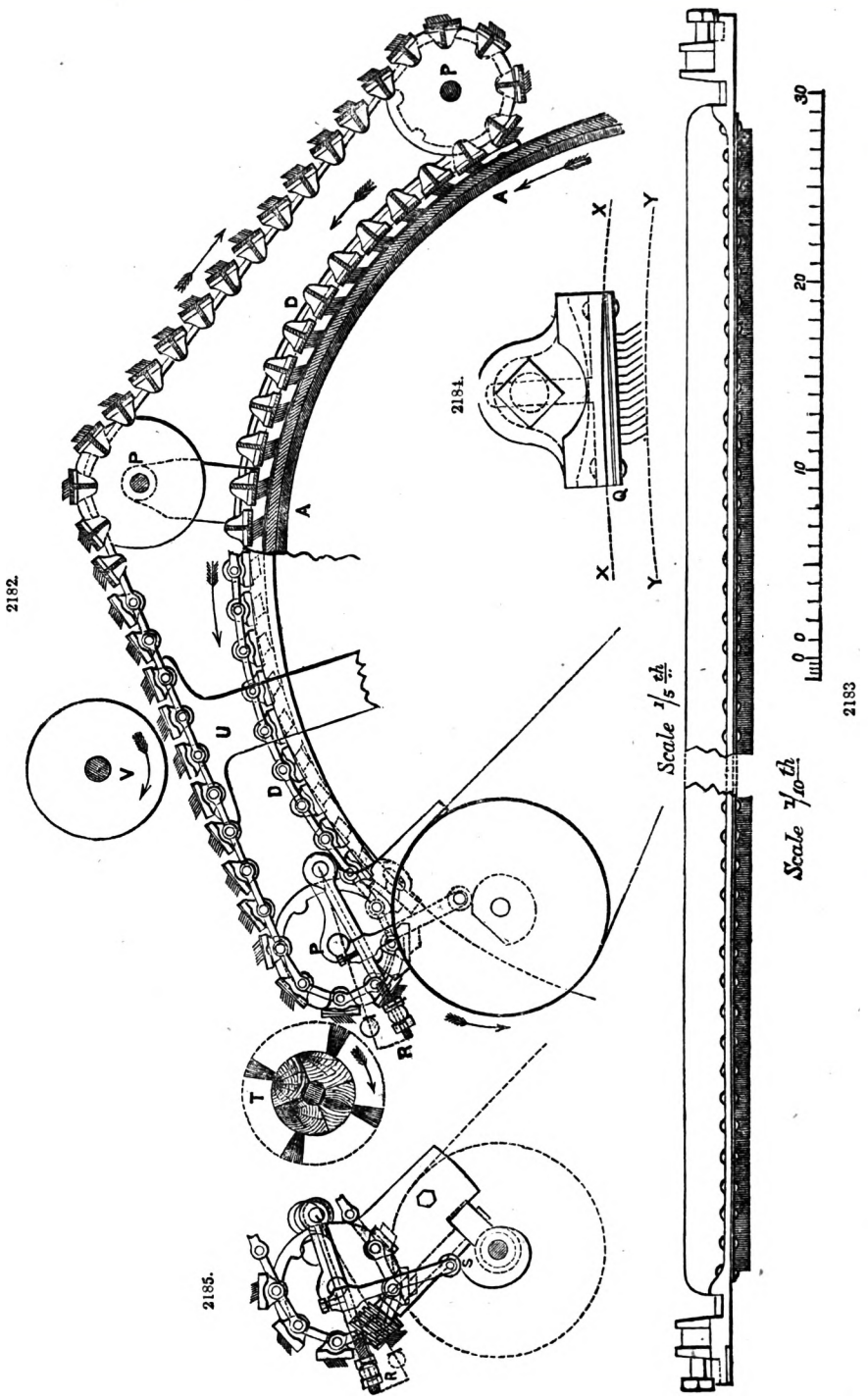

The cotton is then carried forwards by the carding cylinder to the series of flat cards D D, Fig. 2182, which are made of cast-iron bars faced with card teeth, as shown to a larger scale in Figs. 2183, 2184; these extend the entire width of the machine, and rest at each end upon a cir-

cular guide on the top of the side frames of the machine, which is concentric with the main carding cylinder A, so that the teeth of the flats are kept in close proximity to the teeth of the carding cylinder during the whole of their forward traverse. The teeth of the flats D are set to face those of the carding cylinder A, and travel forwards in the same direction as the surface of the cylinder, but at a very slow rate of only 1 in. a minute: and the cotton thus undergoes a very thorough carding and straightening in passing the twenty-one cards that are always in contact with the top of the carding cylinder. The flats are arranged to work at a slight inclination to the surface of the carding cylinder, so that the delivering side of each flat is closer to the cylinder, and a wider space is left at the entering side between the flat and the cylinder for the cotton to enter, as shown half full size in Fig. 2184. The angle thus formed is called the bevel of the flat, and the correct adjustment of this inclination is a point of great importance and delicacy; the bevel is obtained by cutting a bevel groove Q in each end of the flat at the part where it is to rest upon the circular guide on each side of the machine, as shown enlarged in Figs. 2183, 2184, where the dotted circle X X represents the edge of the guide on which the flat travels, and the dotted circle Y Y indicates the surface of the main carding cylinder A.

The endless lattice of flats D D is carried over the three shafts P P P, and on quitting the carding cylinder A, each flat in turn is stripped of any fibres or impurities adhering to it by the vibrating comb R, which describes an arc of 1 in., and is driven at the rate of forty double strokes a minute by the cam S, Fig. 2185. The flats are further cleaned by the brush T, shown in plan in Fig. 2186, running at a surface speed of 50 ft. a minute; and they are then passed over a guide U, which holds them up against an emery wheel V, running at the high speed of 550 ft. a minute, and traversing across the machine along the length of the flats, whereby the faces of all the cards are successively ground to a true surface whilst at work, and the points of the wires sharpened. The same mode of grinding is also employed for keeping true the surfaces of the carding cylinder and doffer. The fleece of straightened fibres is taken off in a continuous sheet from the carding cylinder by the doffer K and vibrating comb I, and is contracted into a sliver and coiled down into the can O in the same manner as previously described.

The stripping by hand labour, however, was an unhealthy and a disagreeable process; and bad work and spoiled cotton were the consequences whenever it was not done regularly and thoroughly. Many arrangements have been introduced from time to time for stripping the flats mechanically. Within the last few years a simple mechanism for this work has been introduced by Mr. Wellman, an American, the application of which has received a great stimulus from the difficulty of obtaining men to perform the stripping by hand; and it is now extensively used. Metal flats were introduced by Smith, of Deanston, and these were linked together in the form of an endless lattice, which was made to travel slowly forwards over the carding cylinder; and each flat was adjusted to the proper bevel by two screws at each end, which travelled over two circular guides concentric with the carding cylinder. Another short flat guide at the back of the flats brought them into contact with a stripping brush, which was cleaned by a comb, and the comb teeth were scraped clear by a tin knife. These flats were used in several of the Scotch mills, but few of them were introduced into Lancashire. The flat carding machine was further improved by Mr. Evan Leigh, by cutting the bevel on the ends of the flats, as shown at Q Q, Fig. 2183, and making the circular guides over which they travel adjustable for wear; at the same time a second face was formed on the back of the flats, to work over the guides U, Fig. 2182, which hold them up in the right position for being ground by the emery wheel V; and the vibrating comb R was also added for stripping the flats before they are finally cleaned by the brush T, instead of the brush alone being used for the purpose.

The finisher carding machine until recently was constructed without the taker-in roller H, Fig. 2181, the main cylinder taking the fleece direct from the feeding roller G. This caused the fibres to clog the cards, and any impurities passing the feed-roller damaged the teeth of the main cylinder, which was of serious importance on the large extent of surface of the cylinder. By using the taker-in, however, these evils are prevented, the fibres being delivered to the carding cylinder in a more divided state, and more equally distributed over its surface. Carding machines are also sometimes made, which are a combination of the breaker and finisher card, having rollers and clearers on the side of the cylinder next the feeder, and flats on the side next the doffer.

The practical difficulty originally experienced with the carding engine consisted in getting the cards to work sufficiently near to one another without occasionally coming in contact, which destroyed the carding points. The surfaces on which the cards were fixed were generally constructed of wood, and therefore varied with every change of the atmosphere from the shrinking or swelling of the wood, so that the faces of the cards had to be made true each time by grinding down the points of the wires at the full parts. Moreover, the cylinders and rollers were not carefully constructed so as to run with a steady motion; and the fixings for carrying the different journals were not capable of a fine adjustment, nor were they steady after being set. These defects are now overcome by using iron instead of wood, and by the aid of machinery and tools adapted for making all the parts accurately; fine adjustments are provided, and the adjustable portions are made as firm when set as if fixed. These improvements cause less grinding and stripping to be required, as the finer and truer the points of the wires can be maintained, the clearer the cards continue in working.

Drawing.—The slivers from the finisher card are next taken to the Drawing Frame, shown in section in Fig. 2187, which contains generally four pairs of drawing rollers A, each pair running faster than the preceding, and the front pair running at six times the surface speed of the back pair. Six slivers B in separate cans from the carding engine are fed up together to the back pair of drawing rollers, being combined together by passing between two guide-pins C; and after being laid together and drawn out to six times the original length, the single sliver so produced is passed through a funnel to the pair of callender rollers D, by which it is delivered to the coiler E, and coiled down into the can F in the same manner as in the carding machines. This combined sliver, having

been doubled six times and drawn six times, is the same weight a foot as each of the original slivers fed up to the back pair of rollers; and the object sought in the doubling and drawing process is to equalize the distribution of the cotton fibres and produce slivers of more uniform strength and texture by the combination. The process is repeated three times in this machine, and the extent of combination or intermixture obtained in the ultimate slivers is therefore represented by the cube of six, or 216 times, in comparison with each of the original slivers first supplied to the machine.

In order to ensure the drawing rollers being always supplied with the full number of six slivers, each of the slivers fed up to the rollers is passed over a guide G, turning on a centre pin and nearly balanced, so as to turn with a slight pressure; and during the working of the machine this guide is depressed by the weight of the sliver into the position shown by the full lines. But in the event of the sliver breaking or running out, the tail of the guide, being overweighted, drops into the position shown by the dotted lines, and catches the vibrating finger J, which is worked by an eccentric on the shaft H running at 70 revolutions a minute. This shaft is driven at the end

2187.

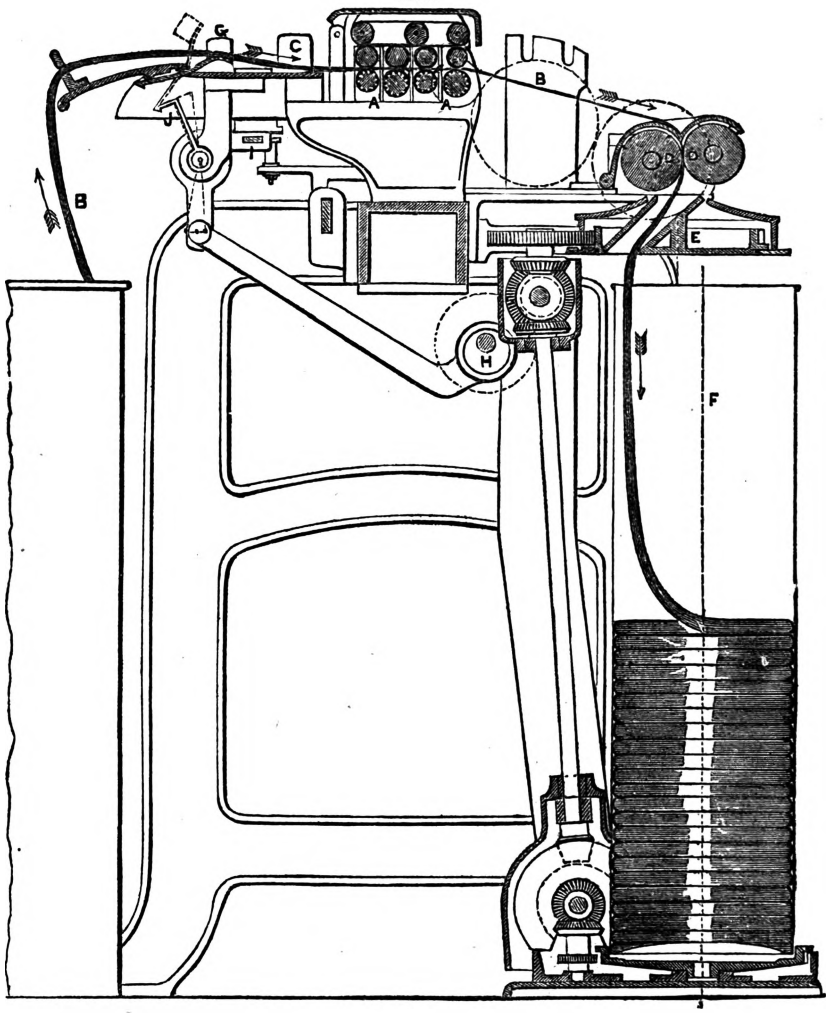

by a small crown ratchet-clutch, held in gear by a spiral spring behind and driving by the inclined faces; so that whenever the shaft H is stopped by the tail of a guide G catching one of the vibrating fingers J and the ratchet is consequently held stationary, the clutch is thrown out of the ratchet by the inclination of the teeth, and the end-motion thus produced releases a catch which holds the strap-fork of the machine; the fork is then reversed by a spring always acting upon it to throw off the strap from the fast to the loose pulley, thus stopping the machine. After the sliver run out has been renewed or the broken sliver joined up by the attendant, the machine is set in motion again by moving the starting rod I, which extends the whole length of the drawing frame.

The improvements made in the drawing frame since its introduction include, amongst other details, the construction of the roller-supports so as to be easily set and adjusted to the different distances required to suit the different lengths of cotton fibre worked; the addition of the self-acting stop-motion, for stopping the machine when any one of the slivers breaks or runs out; a simpler mode of suspending the weights from the top rollers; and the use of an endless travelling cloth over the surfaces of the top rollers, as shown in Fig. 2187, for cleaning off the waste or fly from the

rollers. The top rollers are also made with dead spindles and loose bosses, the bosses being driven by independent motions. In drawing frames used to prepare slivers for the finer counts of yarn, an additional stop-apparatus is provided for stopping the machine whenever a breakage of the sliver occurs between the front pair of drawing rollers and the callender rollers D, Fig. 2187, or when the can F is full or a given length of sliver has been delivered; this stop-action is worked from the same shaft H as that employed for breakages of the supply slivers.

Slubbing, Intermediate, and Roving.—The slivers delivered from the drawing frame are conveyed to the Slubbing Frame, into which they are fed either single or double, passing over a guide, like that in the drawing frame, to a set of three pairs of drawing rollers; the last pair runs at five times the speed of the first, so that the sliver is again increased in length five times in passing through the rollers. From the drawing rollers the sliver, now called slubbing, passes to a revolving flier carried upon a vertical spindle, by which it is twisted and then wound upon a bobbin revolving loose upon the same spindle. The flier runs at a constant speed, while the bobbin is driven by means of a differential motion at a speed varying according to its increasing diameter as the slubbing is wound on; and the lifting movement, for raising and lowering the bobbin upon the spindle so as to wind on the slubbing in regular coils, is also worked by the same differential motion. The speed of the flier is 500 revolutions a minute, and the slubbing is delivered from the drawing rollers at the rate of 50 ft. a minute, so that the number of twists put into it in this machine is $\frac{5}{6}$ twist an inch of length.

2188.

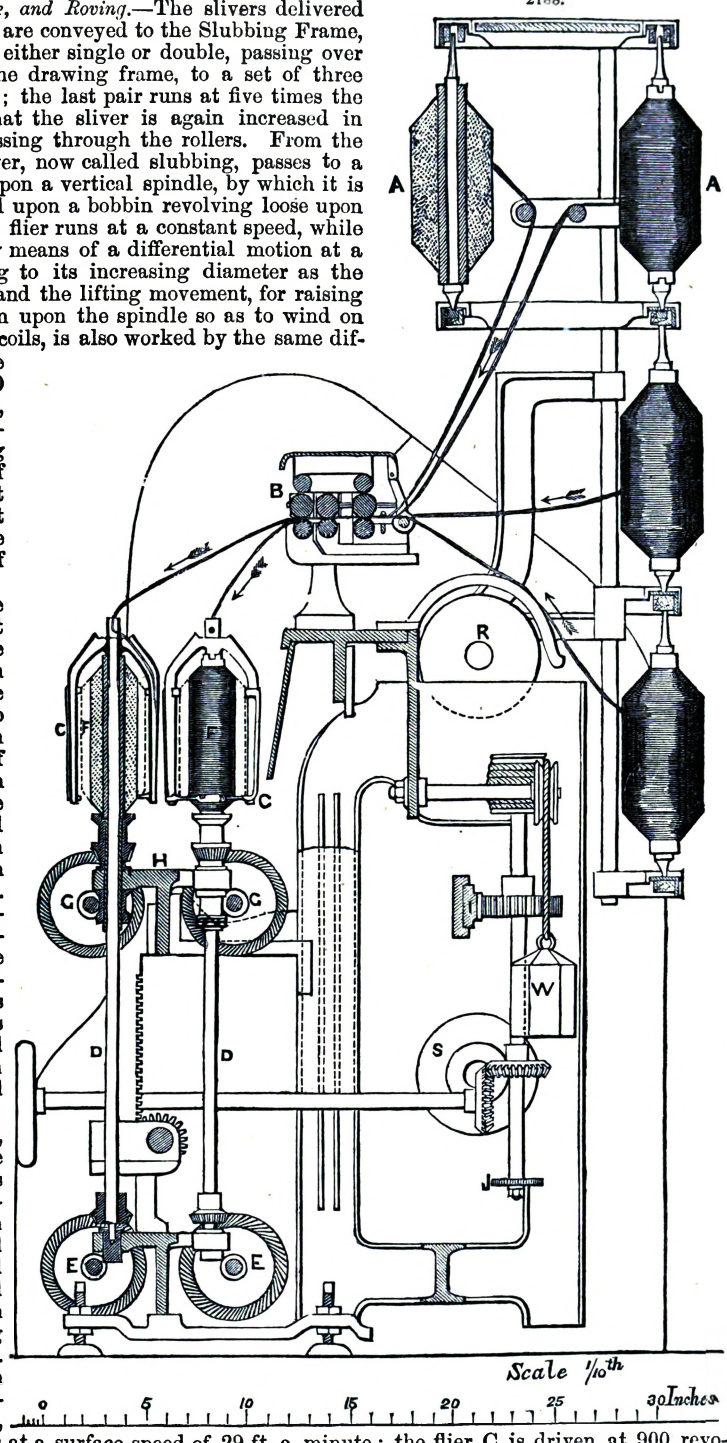

The bobbins from the slubbing frame are next supplied in pairs to the Intermediate Frame, in which the slubbings are doubled by passing two of them together through a set of three pairs of drawing rollers, and then twisting them into one by means of a flier, and winding on a bobbin in the same manner as in the slubbing machine. In this process, intermediate between the slubbing and roving, the amount of drawing produced by the rollers is five times, and $1\frac{1}{4}$ twists are put into the doubled slubbing by the flier an inch of length delivered from the rollers.

In the Roving Frame, shown in Fig. 2188, the contents of two bobbins A A from the intermediate frame are again doubled, drawn, and twisted as before; and the cotton, now called roving, is wound upon bobbins ready for being finally spun into thread. The extent of drawing in the three pairs of drawing rollers B is six times, and the front pair runs at a surface speed of 29 ft. a minute; the flier C is driven at 900 revolutions a minute, and thus puts $2\frac{1}{2}$ twists an inch into the roving. The bobbins A A supplying the cotton for the rovings are fitted upon wood spindles called skewers, pointed at the lower end where they rest upon their bearings, which are shallow cups made of glazed earthenware; these

are found very durable, lasting for twenty years before requiring renewal: but when brass or cast-iron bearings were previously tried they were found to be worn through in as many months, whilst the skewers made of lance-wood were but little worn. The spindles D carrying the fliers are driven by skew-bevel wheels on the shafts E at the bottom of the machine. The bobbins F are loose upon the spindles, and are driven by skew-bevel wheels on the shafts G, carried in the bobbin-lifter H, which supports the bobbins and gives them the vertical movement on the spindles D for winding the roving in uniform coils from top to bottom of the bobbins.

As the winding is effected by the difference of speed between the bobbin and flier, both of which revolve in the same direction, the speed of the bobbin may either exceed that of the flier, or the converse; and both plans are in use in the present machines. When the bobbin runs in advance of the flier, the speed of revolution of the bobbin has to be gradually diminished as its diameter increases by each successive layer of roving wound on; otherwise the delicate roving would be irregularly stretched or broken by the relatively increasing surface speed of the bobbin, as the speed of the drawing rollers B and the flier C is required to be constant in order that an equal amount of twist may be put into the roving throughout its entire length. On the other hand, when the bobbin follows the flier, its speed of revolution has to be gradually increased as its diameter increases by winding. In either case the vertical reciprocating movement of the bobbin-lifter H has to be gradually retarded, to allow a longer time for winding each successive layer of roving upon the increasing circumference of the bobbin: and the length of the vertical motion is also diminished at each reciprocation, so as to give the required conical form to the ends of the bobbin, which is effected by means of a separate shortening motion.

The arrangement employed at the present time for obtaining the differential speed of the bobbin and bobbin-lifter in the slubbing, intermediate, and roving frames, is Houldsworth's Differential Motion, shown in Fig. 2189. It consists of three portions, the first of which is driven at a constant speed, and drives the spindles and fliers; the second is driven from the first at a speed varying in proportion to the increase of diameter of the bobbins; and the third portion, from which the bobbins and bobbin-lifter are driven, receives a differential motion compounded of the other two, and therefore also varying with the increasing diameter in winding. The shaft K being driven at a constant speed by the driving strap over the pulley L imparts a uniform speed to the spindles and fliers by the pinion M, which is fast upon the shaft. The pinion N driving the bobbins and bobbin-lifter runs loosely upon the shaft, and is driven through the differential bevel gearing O by the bevel wheel P keyed upon the shaft K. The two bevel wheels O O, through which the differential motion is obtained, are centred in the disc wheel Q running loose upon the shaft K. If the disc wheel were held stationary, the pinion N would be driven through the wheels O O at the same speed as the wheel P, but in the contrary direction, and would therefore drive the bobbins at the same speed as the spindles; but if the disc wheel Q were made to revolve upon the shaft K at half the speed of the wheel P, but in the contrary direction, the pinion N driving the bobbins would run at double the speed of the wheel P. If therefore the disc wheel Q be driven at an intermediate speed, and this speed be also made to vary in proportion to the increasing diameter of the bobbins, the pinion N will receive and impart to the bobbins and bobbin-lifter a differential speed, which also will vary in the ratio of the diameter of the bobbins. This object is obtained by driving the disc wheel Q through the pair of regulating cones R and S, which are parallel but reversed end for end in respect to each other; the first cone R is driven at a constant speed direct from the shaft K, and drives the second cone S through the strap T, which is made to travel gradually from one end of the cones to the other. Hence the disc wheel Q, which is driven by the second cone S, runs at a varying speed depending upon the position of the strap upon the cones; and by making the strap travel along the cones at a rate corresponding with the increasing diameter of the bobbins, the speed of revolution of the bobbins is accurately proportioned to their diameter so as to give the required uniformity in surface speed throughout the winding. The travel of the strap T is effected by a rack-motion I and ratchet-wheel J, Fig. 2188, each vertical reciprocation of the bobbin-lifter releasing the ratchet-wheel J one tooth, and allowing the strap to be drawn forwards the corresponding distance along the cones R and S by the weight W constantly acting upon the strap-fork.

In the case shown in Fig. 2189, it will be seen that the speed of the first cone R is $\frac{1}{2}$ that of the driving shaft K; and the speed of the disc wheel Q is $\frac{1}{5}$ that of the second cone S, and its rotation is in the contrary direction to the driving shaft K. The diameter of the cones being 6 in. at the large ends and $3\frac{1}{2}$ in. at the small ends, when the strap is at the end U, as shown by the dotted lines, the ratio of speed of the disc wheel Q to the driving shaft K is $\frac{1}{2} \times \frac{6 \cdot 0}{3 \cdot 5} \times \frac{1}{5} = \frac{1}{6}$ nearly; that is, the disc wheel makes one revolution for every six of the driving shaft, and in the contrary direction; and therefore the bobbin-pinion N makes eight revolutions for every six of the flier-pinion M. Similarly when the strap is at the end V of the cones, the ratio of speed of the disc wheel to the driving shaft K is $\frac{1}{2} \times \frac{3 \cdot 5}{6 \cdot 0} \times \frac{1}{5} = \frac{1}{16}$ nearly; that is, the disc wheel makes one revolution for every sixteen of the driving shaft, and in the contrary direction; and therefore the

2189.

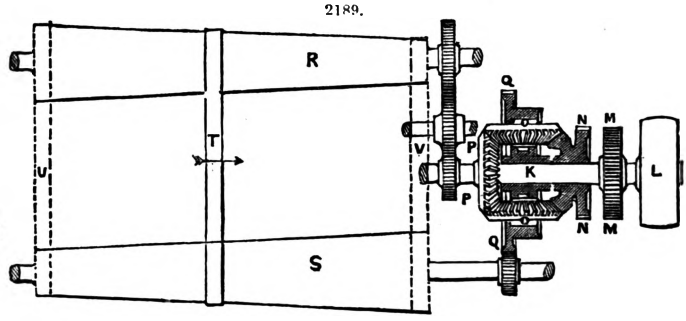

bobbin-pinion N makes eighteen revolutions for every sixteen of the flier-pinion M. Hence the ratio of speed of the bobbin-pinion to the flier-pinion is 32 to 24 in the first case and 27 to 24 in the second; and the total reduction of speed of the bobbins, whilst the strap travels along the entire 30 in. length of the cones, is $\frac{5}{32}$, or 16 per cent. of their original speed, which is the range of variation required to allow for the increasing diameter of the bobbins in winding.

The differential motion affords the means of obtaining this delicacy of adjustment with a compact and easily-worked apparatus; and by virtually magnifying the range of variation required avoids the use of cones with too small a taper for good working. The arrangement shown in Fig. 2189 is for the case of the bobbin running in advance of the flier, when the speed of the bobbin has to be reduced as its diameter increases in winding; and the action of the differential motion is exactly similar in the converse case of the bobbin following the flier, the only difference being that the disc wheel Q must then be made to rotate in the same direction as the driving shaft K, instead of in the contrary direction. As the advance of the driving strap T along the cones is a uniform amount at each reciprocation of the bobbin-lifter, the driving cone R requires to be shaped with a concave outline and the driven cone S with a corresponding convex outline; since the absolute increase made in the diameter of the bobbin by each successive layer of roving bears a continually diminishing ratio to the increasing diameter of the bobbin, requiring the variation of speed therefore to be effected also in a continually diminishing ratio.

Houldsworth's differential motion requires only a single rack and pinion of uniform pitch, with ratchet-wheels of varied pitches for giving motion to the rack-pinion; so that for a change in the fineness of the roving it is only necessary to change the ratchet-wheel, which is readily effected and is much more convenient than having to change the rack. When this form of the differential motion was first applied, one cone drum only was used, with counter-pulleys and a weighted pulley for keeping the strap tight; but latterly the two cone drums shown in Fig. 2189 have been used instead, made with corresponding concave and convex surfaces, so that the strap continues equally tight in all positions.

Spinning.—In the practical working of Arkwright's spinning machine and Hargreaves' spinning jenny, it was found that the rovings and threads produced were both coarse and uneven, only fit for the manufacture of quiltings, and poorly adapted even for that purpose. A great improvement in this respect was effected in 1779 by Samuel Crompton's spinning machine or mule, which was a combination of Paul's or Arkwright's spinning machine and Hargreaves' jenny, combining the drawing-roller arrangement in the former with a modification of the sliding cross-bar and spinning spindles in the latter. In this machine the spindles were placed in a movable carriage, which had a stretch or run of about 54 in.; and the rovings delivered from the drawing rollers in a soft state were further drawn by the spinner in pulling the carriage backwards from the rollers, and completely twisted by the receding spindles, ready for being wound upon the spindles during the run-in or return traverse of the carriage and spindles. In the spinning jenny each successive length of the rovings was held by the clasp on the sliding cross-bar, and the stretching of the rovings was done entirely by drawing back the cross-bar by hand from the spindles; and in Arkwright's machine the stretching was performed entirely by the rollers; but in Crompton's mule the stretching was accomplished partially by the drawing rollers, when the carriage and spindles began to recede from the roller-beam, and partially by the continued run-out of the carriage after the rollers had been stopped. The rollers were stopped when the carriage had receded nearly the length of its run, and they then acted as a clasp to hold the threads during the completion of the stretching and twisting.

Crompton's first mule contained about thirty spindles; and the threads spun by it were far superior in regularity, strength, and fineness to any ever spun before. They realized about double the prices obtained in 1743 for the same counts of yarn spun by other machines, and must therefore have been very superior in quality, having been produced much more cheaply; and in order to show what could be done with the mule, small quantities were spun as fine as No. 80, which is such a quality of thread that 80 hanks of 840 yards each weigh together 1 lb. The adoption of these mules extended so rapidly that in 1811, thirty-two years after the first was made, there were 600 mills containing 4,209,000 spindles working on this plan, and only 310,500 spindles on Arkwright's plan, and 155,900 spindles on the spinning-jenny plan.

Many of the principal movements, however, in the working of Crompton's mule still required to be performed by hand by the spinner, the same as in the previous machines. This was the case with the backing-off motion, and with the working of the two faller wires, a second or counter-faller having now been added underneath the threads, which was lifted for the purpose of taking up the slack in the threads after the backing off, the first faller being depressed for guiding the threads upon the cops during the winding. The speed of the spindles also required regulating by hand during winding, so as to correspond with the increasing diameter of the cops formed on the spindles, and to suit the conical-shaped ends of the cops. Great skill was therefore necessary on the part of the spinner, in order to make the cops regular in shape, size, and hardness, suitable for transport and for being uncoiled without waste. To supersede this skilled labour and render the mule self-acting was therefore the great aim in the subsequent improvements.

In 1818 the entire operation of winding up the spun threads into cops on the spindles was rendered altogether self-acting by William Eaton. This involved both a self-acting method of performing the backing off, which has to be done at the conclusion of the twisting of each stretch, before the winding begins; and also a self-acting arrangement in connection with the faller wire, for guiding the threads regularly upon the cops during the winding, and a self-acting contrivance for regulating the speed of the spindles according to the increasing size of the cops.

The arrangement of Eaton's Backing-Off Motion is shown in Figs. 2190, 2191. The main shaft or rim shaft A, from which the driving motion of the spindles in the travelling carriage is derived, is itself driven in the forward direction during the twisting, and again during the winding, by the driving strap running on the fast pulley B, as shown by the dotted lines in Fig. 2191. The loose

pulley C communicates a slow motion through intermediate pinions to the wheel D revolving loose upon the shaft A, but in the contrary direction; and at the other end of the shaft A is a corresponding wheel E fast upon the shaft. The two toothed sectors F F are keyed upon a shaft G, which is carried in the rocking frame H; and the weight K on the rocking frame is constantly acting to draw the sectors back, out of gear with the wheels D and E; while the sectors themselves are only partly counterbalanced by the second weight L, and are ready to fall down into gear with the wheels as soon as the catch I, by which they are held up out of gear, is released. When the twisting of the threads is completed, the driving strap is shifted to the loose pulley C, and the forward motion remaining in the shaft A is arrested by friction brake carrying a ratchet-wheel, which is caught by a hook falling into gear at the moment of reversing the strap. The pull upon this hook extends a spiral spring, the recoil of which is made to release the catch I; and the sectors F falling into gear with the wheels D and E, a backward motion is then communicated to the shaft A from the loose pulley C running forwards, whereby the spindles are made to turn backwards through the few revolutions necessary for backing off the spiral coils of thread at the top of the spindles, preparatory to winding. As the form of cop employed was a simple cone, increasing in height at the same time as in diameter, as shown in Fig. 2192, the length of the spiral coils that require backing off at the top of the spindles becomes less with the increasing height of the cops on the spindles, and the number of backward turns in the backing off has therefore to be gradually diminished as the cops approach completion; this is effected by an adjustable stop underneath the sectors F, which is gradually elevated in proportion to the increasing height of the cops. This stop is connected with a lever catching against a stud at the lower extremity of the arm H of the rocking frame; and the downward movement of the sectors F, while in gear with the wheels D and E, depresses the stop until at length the arm H is liberated; the weight K then withdraws the sectors out of gear, whereby the backward motion of the shaft A is stopped. By then shifting the driving strap to the fast pulley B, the shaft A is again driven in the forward direction, and the threads previously spun are wound up on the spindles as the carriage runs inwards. The pin J fixed upon the carriage, travelling inwards in the direction of the arrow, now comes in contact with the tail of the lever M, and lifts the sectors up again into their highest position, in which they are retained as before by the catch I at the other end of the lever M and when the run-in of the carriage is nearly completed, the same pin J comes in contact with the tail of a second lever N, bearing against the extremity of the arm H of the rocking frame, whereby the sectors are thrown forwards again in readiness for the next time of backing off.

2190.

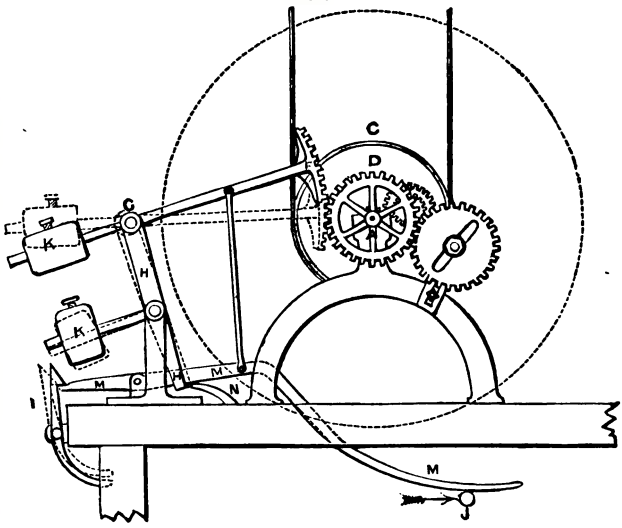

2191.

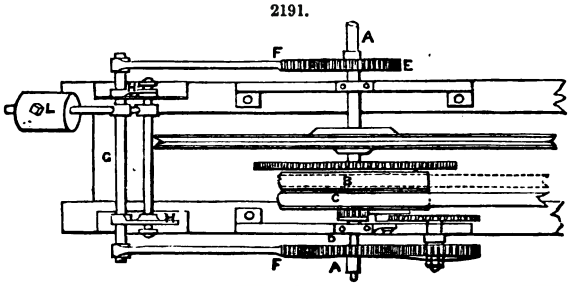

Eaton's Faller Motion is shown in Fig. 2192, and was almost identical with that in use at the present time, the difference being that the faller wire A was depressed by a weight B, instead of, as in the present mules, by a chain passing round a pulley upon the faller shaft C. The direction of the run-in of the carriage D carrying the spindles and cops E is shown by the arrows; and during the run-out in the opposite direction the weight B is held up in the position shown, by the catch F holding the tail of the lever G. This catch is withdrawn by the downward movement of the sectors in the backing-off motion, and the weight B then brings the front end of the lever G down upon an arm on the front side of the faller shaft C, depressing the faller wire A upon the threads H. The roller I, carried upon an arm on the back of the faller shaft, is thus brought up against the pin J fixed in the parallel-motion bar K, and is locked by the latch L; so that by the vertical movement of the bar K the faller wire A is raised and lowered during the winding of the threads, for guiding them upon the cops from end to end. The reciprocation of the bar K is obtained by its bottom end resting upon the shaper fusee or long tapered cam M, which is driven by the pinion N from the toothed wheel O travelling along a rack P fixed upon the floor. As soon as the carriage has begun to run in, the weight B is lifted off the faller and raised again to its original position by the tail R of the lever coming in contact with a fixed stop S. When the carriage arrives at the end of its run-in, the sliding bolt T coming against a fixed stop pushes

back the latch L, and unlocks the roller I; and a balance weight upon the back of the faller shaft C raises the faller wire A clear off the threads into the extreme position shown by the dotted lines. For regulating the shape of the cop as its size increases, the shaper fusee M is gradually traversed endways along its shaft N by the rack and pinion U driven by a worm wheel from the ratchet V, which is turned round one tooth at a time by the lever W coming against a stop X fixed on the floor at each end of the run of the carriage.

Further improvements were introduced by Maurice de Jongh, the backing-off motion being driven by a rack instead of by sectors; and with the backing off was combined the process of putting down the faller wire to the required part of the cops for the commencement of the winding. The working of the faller for guiding the threads during winding was effected by an arm on the back of the faller shaft, carrying a roller, which travelled along a template or copping rail extending the whole length of the stretch. The upper edge of this copping rail was shaped according to the form of cop required, and the entire rail was gradually lowered by a regulating screw at each end as the cop was built up. The winding of the threads on the cops was done by employing a slack strap or friction strap for driving the main shaft or rim shaft of the mule, during the run-in of the carriage; and this strap was tightened by a weight and two friction pulleys pressing against it, the weight being adjusted so as to make the strap drive or slip as required for keeping the threads in proper tension.

2192.

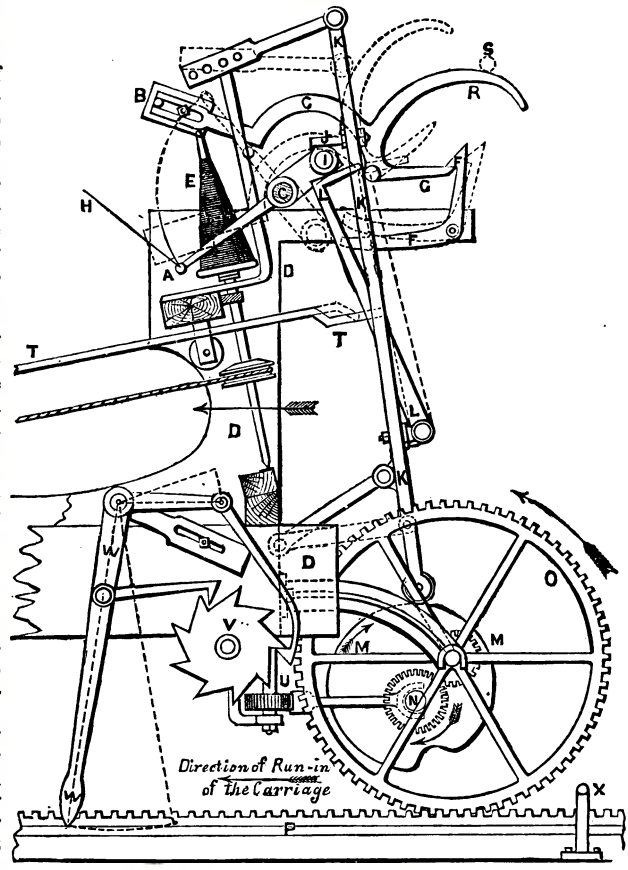

Richard Roberts' Self-Acting Mule is the form of self-acting mule almost universally employed at the present time for spinning cotton. In this mule the faller wire was for the first time put down by the agency of the rim shaft, or main driving shaft of the machine, during the time that the shaft is turning the reverse way for backing off.

The arrangement of Faller-Wire Motion, as employed in the present spinning mules, is shown in Figs. 2193 to 2196. A is the top-faller arm, which is made of the sickle shape shown in the drawing for the purpose of enabling it to put down the faller wire to the bottom of the cops J, without the arm itself being required to pass down between the cops, so as to save room in the length of the mule. On the front of the faller shaft I is keyed the sector C, and a chain D attached to the sector passes round the pulley E to a snail F upon the shaft of the tin roller, which is a long hollow cylinder made of tin, and driving by separate cords the whole row of spindles T. The snail F is geared to the tin roller by a ratchet-clutch, with the teeth set so as to engage only when the tin roller is driven the reverse way for backing off, as shown by the arrow in Fig. 2194. Whilst the tin roller is running forwards during the spinning, and again during the winding, in the direction shown by the arrow in Fig. 2193, the snail F is not in action; but as soon as the carriage G of the mule has run out to the end of the stretch, as shown in Fig. 2194, the tin roller is turned through part of a revolution in the reverse direction, as indicated by the arrow, sufficiently for unwinding the coils in backing off; and the snail F then comes into action and winds up the chain D, thereby bringing the top-faller wire A down upon the threads W and depressing them towards the bottom of the cops. On the back of the faller shaft I is fixed the curved arm B, against which bears the vertical locking bar H; and when the arm B is lifted by the depression of the faller A, its extremity is caught by the recess in the bar H, which is thrown forwards by the bell-crank lever K, as shown by Fig. 2195; the tail of this lever having been brought, by the run-out of the carriage G, under the corresponding bell-crank L fixed in the end frame of the mule, has previously extended the spiral spring attached to the bell-crank L, Fig. 2194, the recoil of which throws the locking bar H forwards as soon as the arm B is sufficiently raised, Fig. 2195. The pulley E is carried on a rocking lever R, the tail of which presses against the stop S in the end frame of the mule during the time that the chain D is depressing the faller, Fig. 2194; but at the moment when the locking bar H is thrown forwards to lock the faller arm B, the stop S is lowered, as shown in Fig. 2195, clear of the tail of the lever R, allowing the pulley E to yield to the further

pull of the chain D until the reverse motion of the tin roller in backing off is stopped; by this means the snail F, Fig. 2194, is prevented from depressing the faller wire A beyond the required distance down the height of the cop.

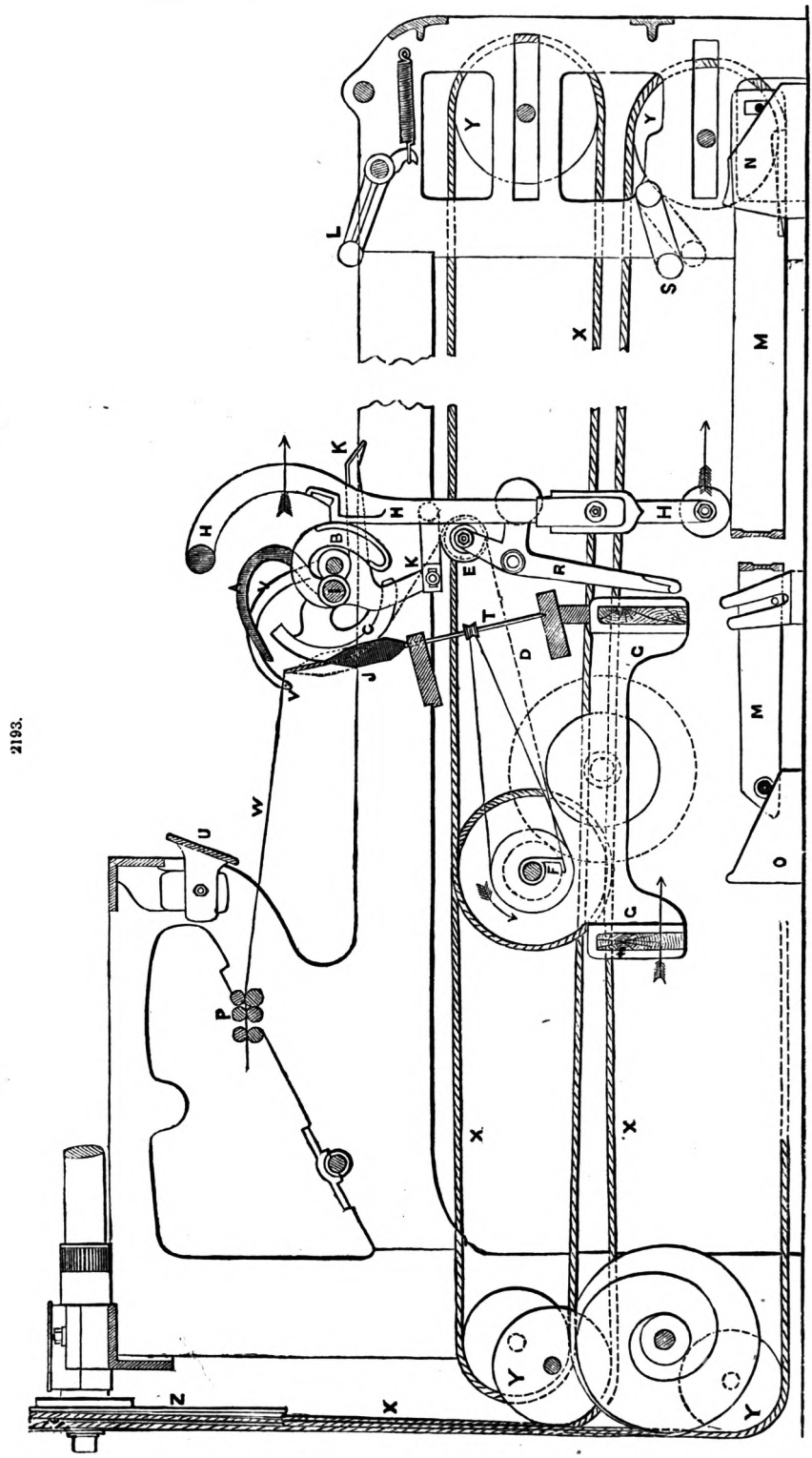

The faller being thus locked, the carriage G begins to run in, in the opposite direction to that indicated by the arrows in Fig. 2193; and while the spindles wind up the threads on the cops, the

faller wire is gradually allowed to rise by the locking bar H running down the inclined copping rail M, the curved arm B being kept constantly pressed home in the notch of the locking bar, by a counter-balance weight or spring acting on the back of the faller shaft I to raise the faller A. The length of the stretch or run-in of the carriage G is 63 in., which is therefore the length of thread to be wound upon the cop J at each time of winding; and this whole length of 63 in. of spun thread in each stretch is wound upon the cop during each stroke of the faller wire. The mode of building up the cop in successive stages is shown half full size in Fig. 2197; and in order to allow for the increasing diameter of the cop, the successive layers of thread are wound upon it in more open coils as the size increases, as indicated by the dotted lines, which is effected by gradually increasing the range of the faller wire; at the same time the ends of the cop are made of the conical form shown in the drawing. The length of range or chase of the faller wire at the commencement of the cop upon the bare spindles is only from A to B; but this is gradually increased until the cop has attained its full diameter C C, when the length of range is from C to D; after which the range is

2194.

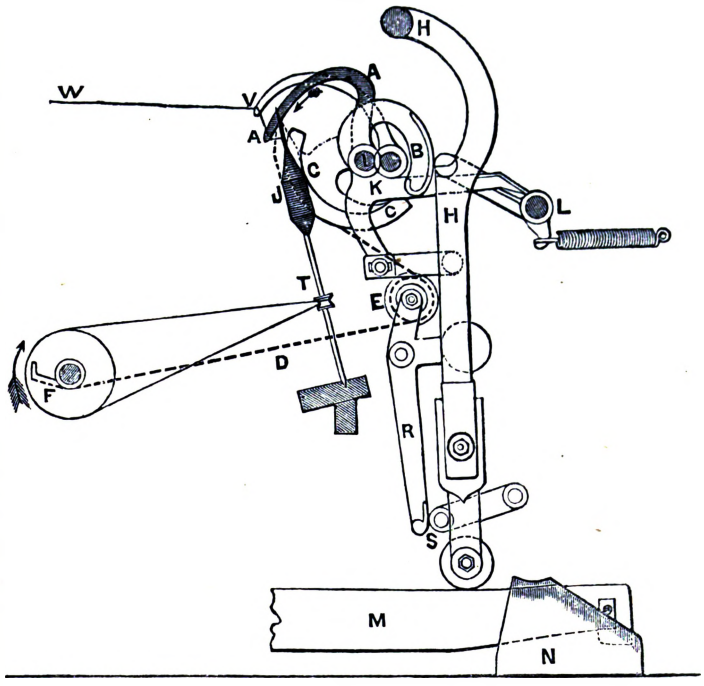

2195.

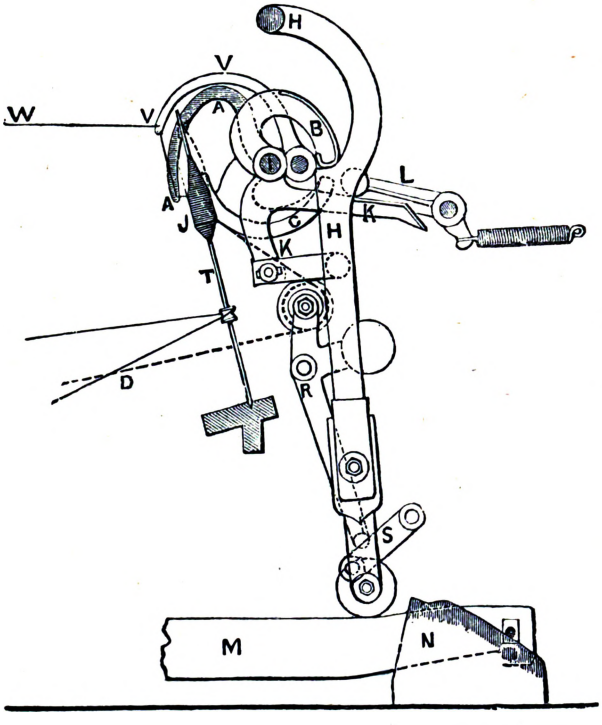

2196.

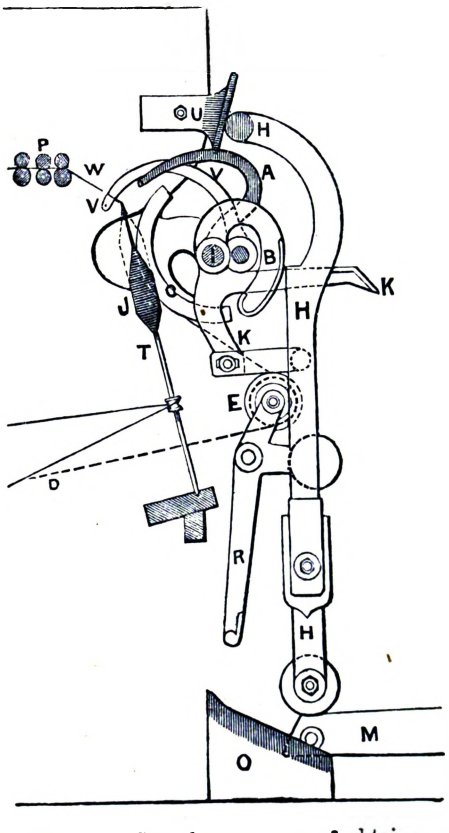

slightly diminished again to the length E F in finishing the cop. For the purpose of obtaining the requisite motion of the faller wire for giving these successive shapes to the cop during the winding, the extremities of the copping rail M, Fig. 2193, are supported on the two sliding wedges N and O, which are kept at an invariable distance apart by a connecting rod. In

commencing the winding of a set of cops upon the bare spindles, as shown at A B in Fig. 2197, the copping rail is set at the top of the wedges and is at its smallest inclination; and after each successive layer has been wound on, the two wedges are slided from under the rail by a traversing screw worked by a ratchet-wheel, which is advanced one or more teeth during each run-out of the carriage G, Fig. 2193. By this means the copping rail M is gradually lowered at both ends, and at the same time its inclination is increased by the outer wedge N being made with a rather smaller angle at the top than the inner wedge O, for the purpose of forming the cop with a more gradual taper at the top than at the bottom, as shown in Fig. 2197. This increase of inclination continues until the cop has attained its full diameter C C and has assumed the shape A C D; after which the inclination slightly decreases again until the cop is completed to the finished shape A C E F, by the latter part of the outer wedge N being made slightly steeper than the corresponding portion of the inner wedge O, as shown in Fig. 2193. The inner end of the copping rail being the lowest, the winding of each stretch leaves off at the top; and at the commencement of winding each stretch the faller wire puts down the thread to the point at which the winding of the new layer is to be started, about three coils being wound on during the descent of the faller, as indicated by the spiral dotted line from F to E in Fig. 2198, and the remainder during the rise of the faller. When the spindles arrive at the rollers P, as shown in Fig. 2196, having wound up the 63-in. stretch of threads, the stop U pushes back the locking bar H, thereby releasing the faller A, which immediately rises clear of the threads W.

2197.

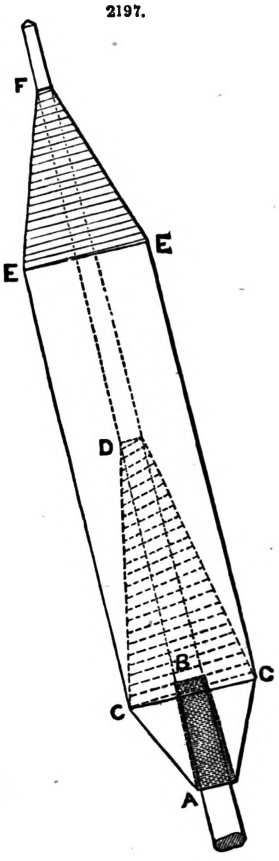

2198.

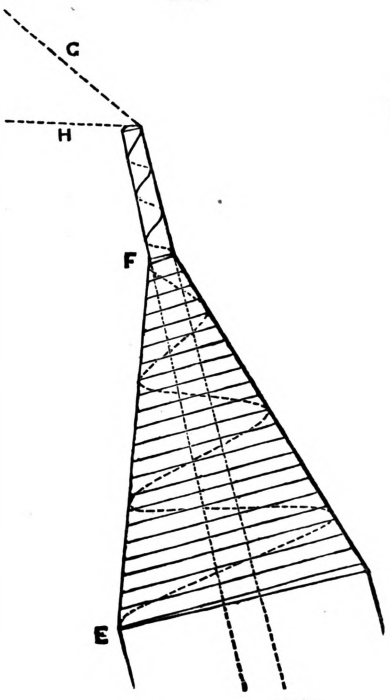

2199.

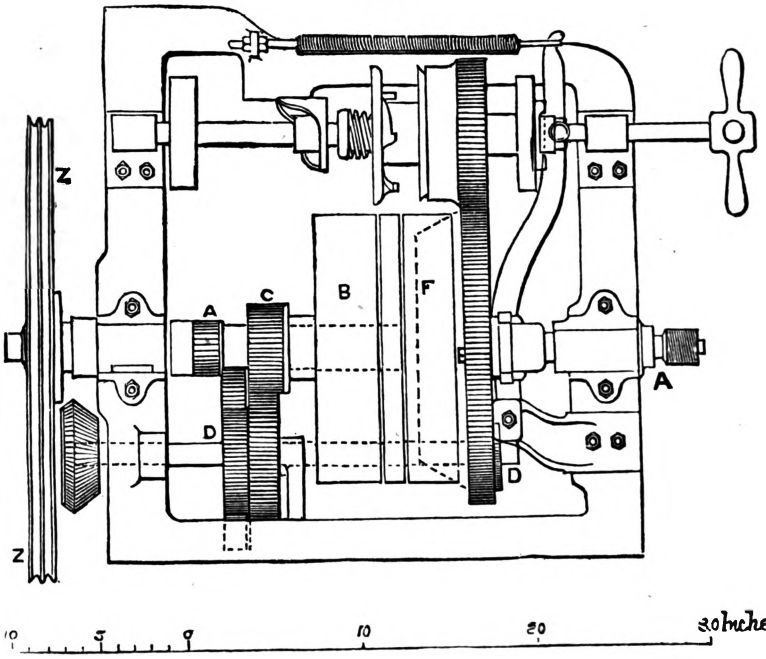

The counter-faller wire is carried by the arm V from a second shaft behind the top-faller shaft I, and during the winding it bears up constantly against the underside of the threads W, as shown in Figs. 2194 and 2195, with a slight pressure from a counter-balance weight or spring acting on the shaft, so as to ensure keeping the threads in proper tension; during the spinning the counter-faller is held up just beneath the threads, but without touching them, as shown in Fig. 2193. The arm V of the counter-faller is curved as shown in the drawing, so as to reach over the shaft I of the top faller, and also to avoid passing down between the cops; and the curved arm B on the back of the top-faller shaft I is shaped so as to clear the shaft of the counter-faller. The height of the counter-faller wire is employed as a means of regulating the speed of the spindles in

winding, in the manner afterwards explained, so as to avoid the occurrence of any slack in the threads.

Roberts' Backing-Off Motion as employed in the present mules is shown in Fig. 2199, which is a plan of the main driving shaft or rim shaft A of the machine, carrying the large rim-wheel Z or double-grooved pulley driving the whole of the mule-spindles by the endless cords X X, Fig. 2193, passing round the pulleys Y Y. On the boss of the loose pulley B is a pinion C, which, through a train of intermediate wheels D D, drives in the reverse direction and at the required slower speed the spur wheel and friction cone E, also running loose upon the shaft A and sliding longitudinally upon it. This friction cone engages in a corresponding hollow cone inside the fast pulley F; and when the driving strap is shifted from the fast pulley F to the loose pulley B for the purpose of backing off, the friction cone is also brought up against the fast pulley, thereby first arresting by friction the forward motion of the driving shaft A, and then giving it the reverse motion for backing off.

Roberts' Winding Quadrant, for regulating the winding of the threads by diminishing the speed of the spindles in proportion as the diameter of the cops increases, is shown in Fig. 2200. This very ingenious contrivance has never been superseded, and is employed in almost every self-acting mule at the present day. The quadrant A turns upon a fixed centre C in the frame of the mule, and a pinion B gears into it, which is driven by a band and pulley receiving motion from the traverse of the carriage G, the arrows indicating the direction of motion during the run-in of the carriage. The grooved arm D of the quadrant contains a double-threaded screw, by which the sliding nut E is traversed outwards from the centre of motion C towards the extremity of the arm D. When the carriage is at the outer end of its stretch, the arm D stands inclined 12° outwards from the vertical, as shown by the dotted lines; and during the run-in of the carriage it turns inwards through an arc of 90°. A chain F, attached to the nut E, is coiled round a drum H inside the carriage G, and as the carriage recedes from the quadrant arm during the run-in the chain thus causes the drum to rotate, and thereby drives the spindles T through the intervention of the tin roller I geared to the drum H. At the commencement of a set of cops, the nut E is at the bottom of the quadrant arm D, nearest to the centre of motion C, as shown dotted; and the number of revolutions then given to the drum H by the uncoiling of the chain during the run-in of the carriage is nearly as many as if the end of the chain at the nut were held stationary, and is sufficient to wind up on the bare spindles the length of threads spun in one stretch.

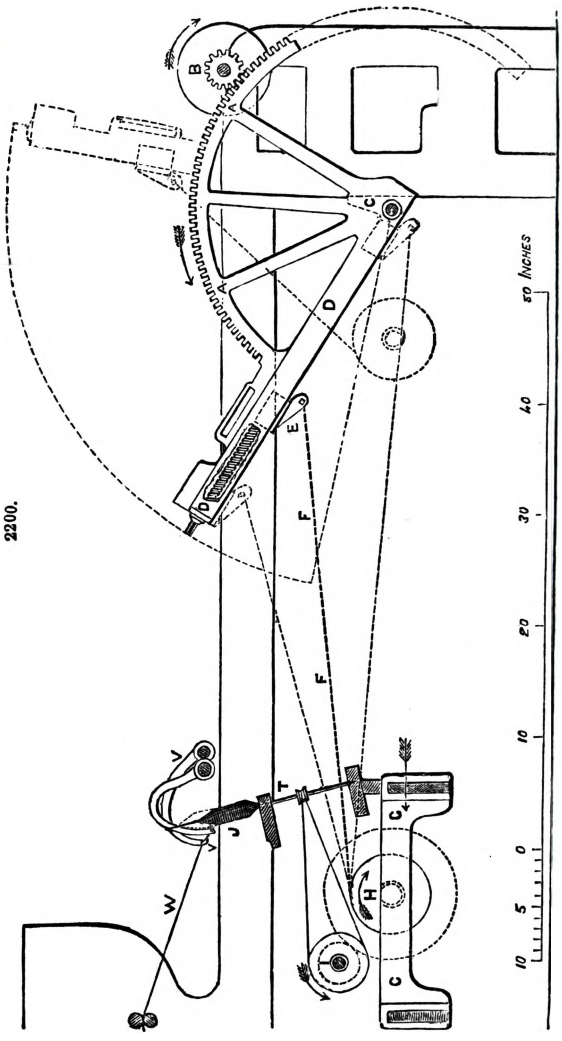

2200.

As the cops increase in diameter from their original size A B to their full diameter C C, Fig. 2197, the nut E is gradually advanced outwards along the quadrant arm D, Fig. 2200, so as to increase its arc of motion and thereby diminish the number of revolutions of the drum H and the speed of the spindles T. This advance of the nut is obtained from the counter-faller V bearing against the under-side of the threads W during the winding. The depression of the counter-faller towards the lower part of the cop J brings down the end of a governing lever upon a horizontal strap, which passes round a pulley on the headstock of the mule and round another on the centre shaft C of the quadrant; and on this shaft is a bevel pinion gearing into a second bevel pinion on the end of the double-threaded traversing screw in the arm D; so that when the governing lever is depressed upon the strap by the counter-faller, the forward motion of the lever as the carriage runs in drags the strap along with it by friction and turns the shaft C forwards, sliding the nut E outwards towards the circumference of the quadrant. At the moment when the backing-off motion has ceased and the carriage begins to run in for winding up the stretch of thread spun, as shown in Fig. 2195, the counter-faller wire V is at its highest working position, compensating for the

additional length of thread that has been uncoiled from the top of the spindle in backing off after the spinning of the stretch was completed. The nut E, however, Fig. 2200, is still at the same distance from the centre C of the quadrant as it was at the conclusion of winding the previous stretch; and, therefore, as the diameter of the cop is now greater by winding the new layer of thread outside the previous one, the winding of the new stretch commences rather too fast, and begins at once to take up the length of thread given out in the backing off. The counter-faller V is thus depressed, and by means of the governing lever slides the nut E farther out from the centre C, until the speed of winding is sufficiently diminished to allow the counter-faller to rise again high enough for lifting the governing lever off the strap. It will be seen that, in consequence of the arm D describing the quadrant of a circle, the horizontal motion of the nut E in the winding of each stretch is greatest at the commencement of the winding, and gradually diminishes as the carriage runs in; and the effect of this is that the speed of winding is gradually increased towards the end of each stretch. By this means the threads are wound uniformly upon the cops, with an equal degree of tightness throughout.

The whole mule is driven by a strap $3\frac{3}{4}$ in. broad, running over the fast pulley F, Fig. 2199, on the rim shaft A, and travelling at about 1670 ft. a minute, or about 19 miles an hour. The driving power required is about 1 indicated horse-power the 230 spindles, or $4\frac{1}{4}$ horse-power for each mule containing 1000 spindles. The speed of the endless cord X passing round the rim wheel Z, Fig. 2193, is 2640 ft. a minute, or about 33 miles an hour. The carriage of the mule makes 3 to $3\frac{1}{2}$ double journeys out and home a minute, the length of stretch being 63 in.; but the velocity varies at different parts of the traverse, the carriage being taken in by a pair of scrolls in the centre of the machine, and drawn out by three spiral grooved pulleys keyed upon a shaft running the entire length of the mule, one pulley being in the middle of the shaft and one at each end. The length of the carriage being upwards of 100 feet, a parallel motion is required for keeping the carriage straight; and this is obtained by a horizontal traversing pulley at each end of the carriage, traversing along fixed cords and thereby made to revolve; and these two pulleys being also coupled together by a crossed cord, are compelled to revolve at the same rate, and consequently cause each end of the carriage to travel at the same rate. There are three pairs of drawing rollers P, Fig. 2193, by which the rovings are drawn about eight times before being delivered for spinning. The last pair of rollers delivers the rovings at a speed of 26 ft. a minute, until the carriage G has run out the 63-in. length of stretch, when the rollers are stopped, and hold the threads fast during the winding up as the carriage runs in again. The actual length of roving delivered by the last pair of rollers for each stretch of 63 in. is about 61 in.

The spindles make about 1260 revolutions in twisting each stretch of 63 in., thus putting about 20 twists an in. into the threads; and the total time occupied is about $12\frac{1}{2}$ seconds. In winding up the threads, as the total length to be wound up remains constant, namely 63 in., the number of revolutions is diminished in each successive stretch according to the increasing size of the cop, from about 70 revolutions at the commencement to 23 revolutions at the full diameter of the cop, with cops of an average size winding an average number of yarn, such as No. 32, which is such a quality that 32 hanks of 840 yards each weigh together 1 lb.; the time of winding each stretch is about $3\frac{1}{2}$ seconds. The velocity of the spindles is about 390 revolutions a minute in winding, and in twisting the speed ranges from 8000 down to 3000 for coarse work, a common average being about 6500 to 7000 revolutions a minute. In backing off, the velocity of revolution is about $\frac{1}{20}$ of that in twisting. The direction of rotation of the spindles is the same in twisting and in winding, and the thread is wound on in a right-handed spiral when spinning twist, and left-handed when spinning weft. Fig. 2198 shows full size the conical form of the top of the spindles for the purpose of letting the thread slip off freely at each revolution in twisting; and the two lines G and H show the extreme inclinations of the thread to the spindles during the twisting. The larger angle shown by the dotted line G, when the spindles are nearest to the drawing rollers, is about 145°; and the smaller angle shown by the full line H is about 105°, when the spindles are at the outer extremity of the stretch. The spindles themselves are inclined inwards towards the drawing rollers at an angle of about 12° from the vertical, as shown in the drawing.

Cotton Gin.—For the purpose of ginning cotton, or separating the cotton fibres from the seed, the roller gins, as they are called, are of the most primitive construction, simply and ingeniously made, and are of Indian origin. Fig. 2201 shows a section of a roller gin of modern construction. It is formed of two small rollers about $\frac{3}{4}$ in. diameter and from 6 to 9 in. long, made to revolve in opposite directions, as shown by the arrows, by means of toothed wheels. The bottom roller turns on fixed bearings, and the upper roller is kept in close contact with it by means of a lever and screw. The cotton seeds are fed forwards between the rollers from the table in front, a space being left between the edge of the table and the bottom roller, to allow the seeds to drop down as they become cleaned of the cotton fibres by the revolving action of the rollers. A brush is fixed underneath the bottom roller to brush off any cotton fibres adhering to its surface. It is necessary that gins acting in this way should have rollers of small diameter, say from $\frac{5}{8}$ to $\frac{3}{4}$ in., because the smaller the rollers the more obtuse is the angle they present to the seed which is being cleaned, and the seeds are thereby better prevented from being drawn in between the rollers and crushed and mixed up with the cotton fibre. It is evident from Fig. 2202 that large rollers present an acuter angle to the seed, and with such rollers the seed would unavoidably be drawn in and crushed

2201.

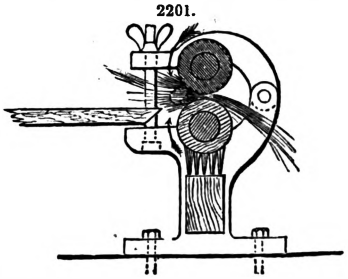

2202.

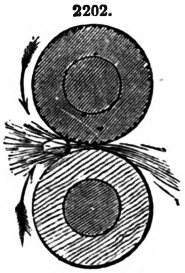

and mixed with the fibre. The object to be attained in ginning cotton is to get it free from all impurities; and it is found that the smaller the rollers and the slower their motion, the cleaner is the cotton fibre separated from the seeds; for if the rollers are above an inch in diameter, and if they revolve very rapidly, they draw in soft, small, and false seeds, crushing them in their passage, and straining and otherwise injuring the cotton fibre.

The most improved gin of the roller class is given Fig. 2203, and is constructed with one large roller covered with leather and having small spiral grooves formed round it both right and left. A guard-plate A is fixed near the surface of the roller, having a grating along its bottom edge just wide enough for the seeds to pass through to the roller; and between it and the roller a thin steel striker blade B vibrates a short distance up and down with a rapid motion. By this means the seeds are shaken and turned round in contact with the surface of the roller revolving in the direction of the arrow, and the cotton fibres are drawn between the blade B and the roller, while the stripped seeds are rejected and drop down through the space between the blade B and the edge of the feed-table, having been thus cleaned of their fibres in a most thorough manner.

2203.

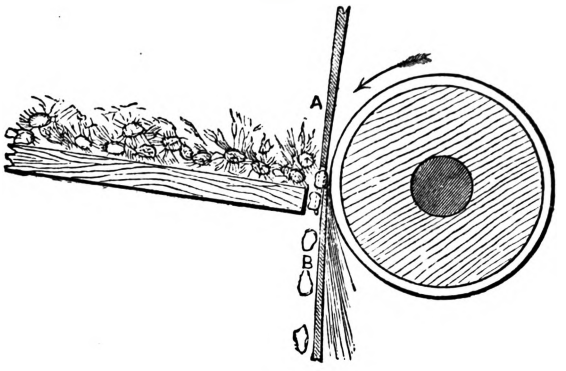

In 1793 Whitney invented a machine, Fig. 2204, known by the name of Whitney's saw gin. It consists of a wooden cylinder with a series of circular saws C, about 8 in. diameter, fixed upon it at regular distances. The edges of the saws project a short distance through a grid, the divisions of which are too narrow to permit the seeds to pass through. Care is taken that the saws revolve in the middle of the grid spaces, for if they rubbed against the bars they would tear the cotton filaments to pieces. A cylinder with brushes D, the tips of which touch the saw teeth, sweeps off the adhering cotton wool from the teeth of the saws by revolving in the opposite direction to the saw roller. The cotton seed as picked from the pods is thrown into the hopper E, and the saws in turning round snatch the filaments from the seed which remains against the grid, and drag them inwards and upwards. The stripped seeds, being too large to pass through the grid, accumulate at the bottom of the hopper E, and are let out at intervals.

2204.

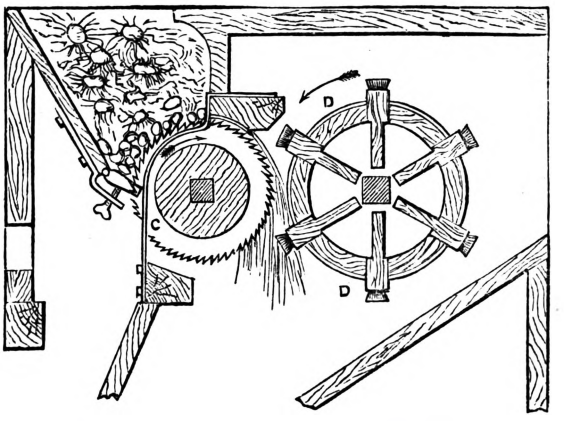

The Carding Engine of Curtis, Parr, and Madeley, of Manchester, Fig. 2205, is constructed on the roller-and-clearer principle. Its dimensions are as follows, namely;—

1 large or main cylinder, 50 in. diameter, and 40 in. on the wire;
1 doffer .. .. 22 in. „ „
7 rollers .. .. 4½ in. „ „
7 clearers .. .. .. 3¼ in. „ „
1 dirt-roller .. .. .. 6¾ in. „ „
1 licker-in .. .. .. 8 in. „ „
1 second licker-in .. 8 in. „ „
5 knives placed horizontally across the main cylinder between the clearer and roller;
6 boxes or receivers, placed across the main cylinder, behind the clearer;
1 revolving shaft, placed inside the boxes or receivers, working horizontally.

It is obvious that the main operations of carding, on the roller-and-clearer carding engine, take place between the roller and main cylinder. The novelty of this carding engine consists in the application of a knife between each pair of rollers and clearers, combined with a box, behind the clearer, to receive all the short-fibre cotton, fly, and shell-dirt liberated through the action of the knife and thrown into the box by the centrifugal force of the clearer. The action of the knife is almost equal to that of a combing machine; for the cotton, being held on the roller, cannot pass in fleeces to the clearer, as is the case when no knife is used, but is drawn by the roller under the edge of the knife, and by this means the fibre is more evenly laid and combed. All extraneous matter is thus liberated and immediately thrown into the box or receiver, and there retained by means of the small revolving shaft. By this principle a better quality of carding can be produced than by the ordinary common roller-and-clearer principle, without the knife and box.

2205.

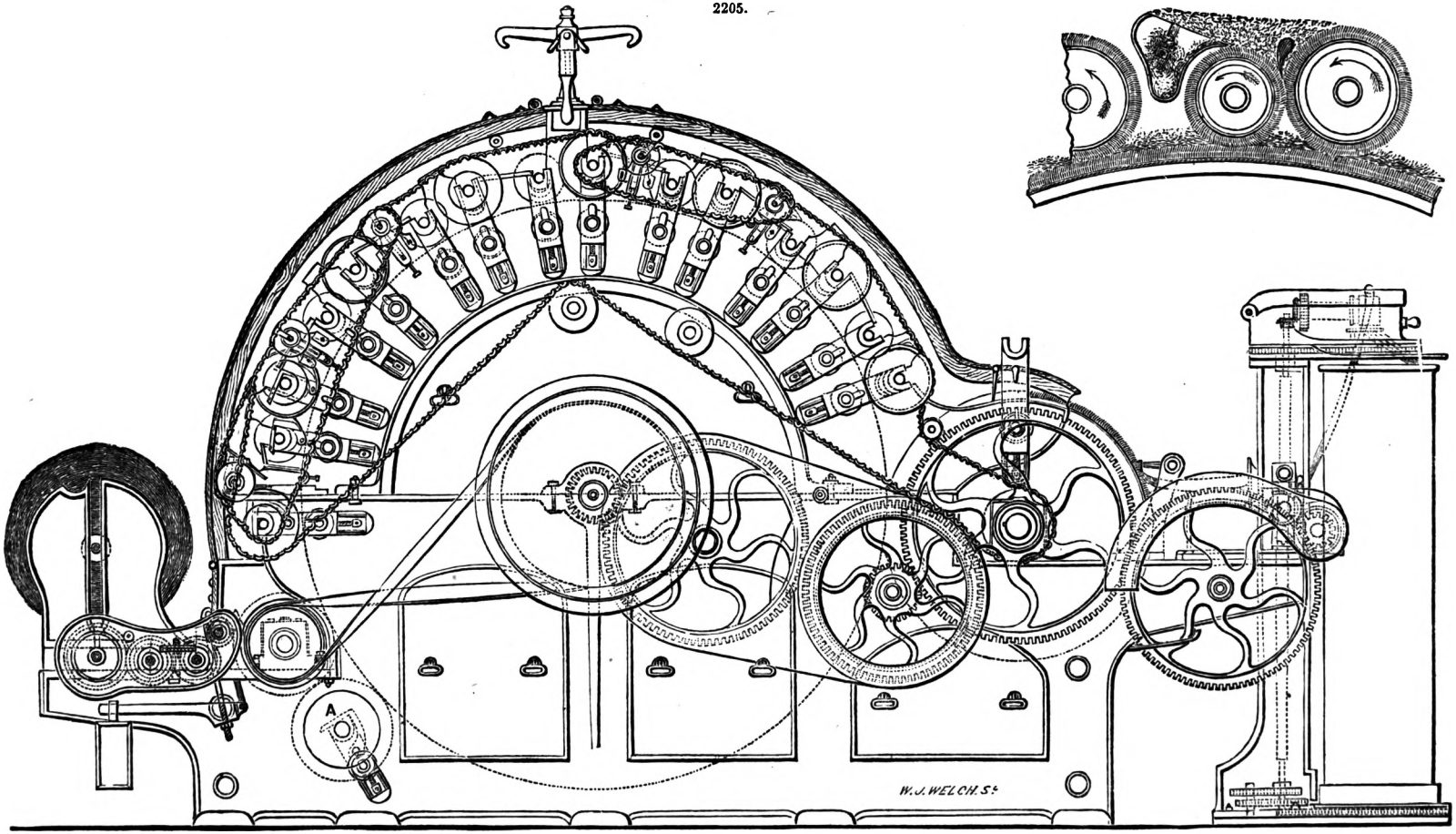

The Roller A is worked in various ways. Sometimes it is set to work into the cylinder as an ordinary roller; at other times it runs one-fourth quicker on the surface than the surface of the cylinder, A is then called a fancy; at other times it works into the licker-in and cylinder, in this case A runs a little quicker than the licker-in.

COTTON PRESS. Fr., *Pressoir à coton;* Ger., *Baumwollenpresse;* Ital., *Macchinada comprimer cotone;* Span., *Prensa para algodon.*

See Presses.

COUNTER. Fr., *Compteur;* Ger., *Zählapparat;* Ital., *Contatore;* Span., *Contador.*

See Details of Engines.

COUNTER-BALANCE. Fr., *Contre-poids;* Ger., *Gegengewicht;* Ital., *Contrapeso;* Span., *Contrapeso.*

An equal opposing weight, power, or agency, acting in opposition to anything, is a *counter-balance;* as the mass of iron cast on the side of a locomotive wheel, opposite the crank-pin, to counterbalance the weight of the latter and its connected parts.

COUNTERFORT. Fr., *Contre-fort;* Ger., *Strebepfeiler;* Ital., *Contrafforte;* Span., *Contrafuerte.*

See Fortification.

COUNTER MINE. Fr., *Contre-mine;* Ger., *Gegenmine;* Ital., *Contromina;* Span., *Contramina.*

See Fortification.

COUNTERSUNK. Fr., *Fraisé;* Ger., *Versenkt;* Ital., *Acceccato;* Span., *Con cabeza embutida.*

The head of a screw or bolt sunk below a surface, by drilling or turning, is said to be *countersunk.*

COUPLING. Fr., *Accouplement, Attelage;* Ger., *Kuppelung;* Ital., *Organi d'accoppiamento;* Span., *Rueda de embrague, de conexion.*

A *coupling* is that which serves to couple or connect, as a hook, chain, or other contrivance; as the coupling of railway carriages; any contrivance for connecting shafts end to end, either permanently or so as to admit of their being joined or disjoined at pleasure, as by a box, clutch, heads with interlocking teeth, and so on. See Gearing.

COUSINET, or CUSHEON. Fr., *Coussinets;* Ger., *Kampfer;* Ital., *Mossa dell'arco;* Span., *Salmer.*

A *cousinet* is the stone placed on the impost of a pier for receiving the first stone of an arch.

COVERED WAY. Fr., *Chemin couvert de l'enceinte;* Ger., *Gedeckter Weg;* Ital., *Via coperta;* Span., *Camino cubierto*

See Fortification.

CRAB. Fr., *Vindas, Chèvre;* Ger., *Krüppelspill, Erdspill;* Ital., *Verricello;* Span., *Torno.*

A *crab* is a form of crane used for raising or moving heavy weights. A contrivance for launching ships or raising them into dock is also termed a crab. See Jack. Winch.

CRADLE. Fr., *Ber, Berceau;* Ger., *Stapel;* Ital., *Invasatura;* Span., *Grada.*

See Gold.

CRAMP. Fr., *Crampon;* Ger., *Klammer;* Ital., *Lega;* Span., *Laña.*

A *cramp* or *clamp* is a piece of iron bent at the ends, serving to hold or compress together pieces of timber, stones, and so on; a cramp-iron.

CRANE. Fr., *Grue;* Ger., *Krahn;* Ital., *Gru;* Span., *Grua.*

See Lifts, Elevators, and Cranes.

CRANK. Fr., *Manivelle;* Ger., *Kurbel;* Ital., *Zanca;* Span., *Cigüeña.*

See Mechanical Movements.

CROSS-HEAD. Fr., *Tête croissée;* Ger., *Kreuzhopf;* Ital., *Crociera;* Span., *Cabeza en* T.

See Engines, *Varieties of.* Marine Engines. Stationary Engines.

CROWBAR. Fr., *Levier, Pince;* Ger., *Brechstange;* Ital., *Piè di capra;* Span., *Palanqueta.*

A *crowbar* is a bar of iron sharpened at one end, and used as a lever for raising heavy bodies.

Hydraulic Crow, Figs. 2206, 2207.—In this tool hydraulic power is employed, it being a hydraulic crow, for straightening or setting rails, designed by J. M. Budge. The construction of this tool consists of a small hydraulic press cylinder, 2¾-in. bore, having hinged to it a pair of arms by which the rail which is to be straightened or set is held. On the top of the press cylinder is screwed a casting, which forms an oil tank, and which contains a small brass pump of the kind used in Tangye's hydraulic lifting jacks; this pump, which has a ⅝-in. ram, being worked by means of a rocking shaft, which projects through the casting and is furnished with a lever handle outside. The whole arrangement is very compact and convenient, and it dispenses with the necessity of using the long awkward levers required with the ordinary screw crows.

2206.

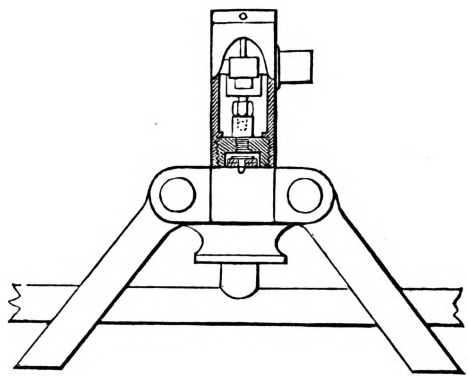

2207.

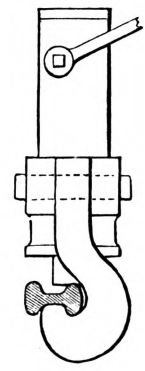

CROWN WHEEL. Fr., *Roue de rencontre;* Ger., *Kronrad:* Ital., *Ruota a corona;* Span., *Rueda de escape.*

See Mechanical Movements.

CRUCIBLES. FR., *Creusets;* GER., *Schmelztiegel;* ITAL., *Crogiuoli;* SPAN., *Crisoles.*

Vessels used for the fusion of metals, and generally for all other chemical purposes in which intense heat is employed.

The use of the crucible appears to have originated with the old alchemists, who were in the habit of marking them with the sign of the cross before commencing their operations; whence the derivation of the name. The principal requisites of a good crucible are, that it should be capable of enduring the strongest heat without becoming soft or losing much of its substance; that it should not crack on being exposed to sudden alternations of temperature; that it should withstand the corrosive effect of the substance fused in it; and lastly, that it should be sufficiently strong to support the weight of the molten metal when lifted from the furnace. In the present day the consumption of crucibles is very large; they are extensively employed by the brass-founder, the gold and silver refiner, the manufacturers of cast steel and gun-metal, as well as in the melting of zinc and copper, in the various operations of the analytical chemist, assayer, and in the production of the coinage of different countries. The crucibles in most common use in Birmingham and its neighbourhood, as well as in Sheffield, are made of a fire-clay found near Stourbridge, which is generally mixed with some other substance, such as powdered coke, in order to lessen its tendency to contract when strongly heated. These Stourbridge clay crucibles, or casting pots, are not burnt until required for use, when they are put into the furnace first with the mouth downward, and when red hot are taken out, and put in again with the mouth upward.

The material from which the most refractory crucibles are now made is plumbago, or, as it used to be called, black-lead. This is one of the various forms assumed by carbon, and in its pure state is nearly identical in composition with the diamond, although so very different in its structure and physical character. Until a few years ago the use of black-lead, Plumbago, pots was exclusively confined to the melters of precious metals, but they are now employed for melting all descriptions of metal; and large numbers of Morgan's far-famed crucibles, which are composed of plumbago, are used by the brass-founders and others in Birmingham. Immense quantities of these crucibles are annually manufactured by the Plumbago Crucible Company, whose works cover a large space of ground at Battersea, near London; and the manufacture as at present carried on at the Battersea works, presents a striking illustration of the rise and progress of a branch of industry comparatively unknown a quarter of a century ago.

In making the crucibles, the materials are first ground to powder and sifted, after which they are mixed with certain proportions of various constituents, so as to give a sufficient degree of coherence and plasticity Formerly, crucibles were made by hand, common wooden moulds being employed, but those of Morgan are made by machinery, thus securing an exactness of form and uniformity of weight which could never be attained under the old processes. Morgan's Plumbago Crucibles, shown in the Exhibition of 1862, had been used for respectively 80, 90, and 100 pourings —a vast improvement on the ordinary clay pot, which is considered to have done a fair average of work if it lasts throughout the day.

The advantage, indeed, of using plumbago crucibles wherever durability is required is now so apparent, that although comparatively expensive at first, they are ultimately found to be the cheapest that can be used. They effect a great saving of time, labour, and fuel (as much as 1½ ton of the latter being saved to every ton of steel fused), and are consequently gradually superseding all others in steel foundries.

Crucibles are made of various forms and sizes, according to the kind of work for which they are intended; those used for assaying are scarcely larger than a lady's thimble, whilst others made for zincing shot will hold as much as 800 lbs. of molten zinc. Some are nearly cylindrical, others triangular, and others skittle-shaped. They are generally numbered according to their capacity; thus, No. 30 will contain 30 kilogrammes, or something more than 60 English pounds, and so on, the adoption of French weights being found useful to Continental consumers.

Cornish crucibles are principally used for assaying copper; they are made of a clay found in some parts of Cornwall, and the smaller sizes are capable of resisting sudden alternations of temperature (a quality which is probably due to the large proportion of silica mixed with the clay), but they are rapidly corroded by melted oxide of lead.

Hessian crucibles were formerly employed to a much greater extent in metallurgical operations than they are at present. They are made principally from a clay found at Gross-Almerode, and in their composition resemble very closely the Cornish crucibles. The form is triangular, and they are generally packed in nests of six; the smaller sizes fitting into the larger. These crucibles are tolerably lasting at moderate temperatures, but are apt to fuse when exposed to very great heat.

Several kinds of *French crucibles* are manufactured, some of which are of very excellent quality, especially those of Beaufay, called the creusets de Paris, and those of Deyeux, termed creusets de Saveignies. Both kinds, however, contain a large percentage of oxide of iron, which renders them objectionable for some purposes.

London crucibles are of a reddish-brown tint, very close grained, and capable of resisting the corrosive action of oxide of lead, but liable to crack when suddenly heated. Of late years white fluxing pots, manufactured by the Plumbago Crucible Company, Battersea, have been very much employed on account of their smooth surface, and their power of resisting the action of fluxes. They are made in various sizes, from 2¼ in. up to 8½ in. in height.

The large crucibles used in the manufacture of glass, glass-house pots, are made of the best Stourbridge clay, mixed with about ⅓ its weight of cement of old pots ground to fine powder.

For special metallurgical or chemical purposes, crucibles are sometimes made of platinum, lime, bone dust, magnesia, pure carbon, and other materials.

CRUSHING AND AMALGAMATING MACHINE. FR., *Bocard, Machine à broyer;* GER., *Pochwerk;* ITAL., *Macchina da stritolare e amalgamare;* SPAN., *Bocarte, Triturador.*

See GOLD. SILVER.

CULVERT. Fr., *Conduit souterrain, Ponceau;* Ger., *Abzugscanal;* Ital., *Condotto;* Span., *Alcantarilla.*

An arched drain for the passage of water under a road or canal is a *culvert.*

DAM. Fr., *Digue;* Ger., *Damm;* Ital., *Pescaia, Diga;* Span., *Represa.*

See Damming. Docks. Embankments. Gravity, *Centre of.* Locks. Water-Supply. Water-works. Weirs.

DAMMING. Fr., *Arrêter les eaux par des digues;* Ger., *Verdämmen;* Ital., *Sostenere un corso d'acqua conpescaia;* Span., *El acto de represar.*

Pressure of Water.—Let L F B D, Fig. 2208, be a vessel of any form whatever, filled with water, *a b* any portion of the surface F K C B in contact with the water, G the centre of gravity of *a b*, G R the perpendicular depth of G below the surface of the water; then if R G = 10 ft., and the area of the surface *a b* = 3 sq. ft., the lbs. pressure on this surface will be = 3 × 10 × 62·5 = 1875 lbs. 1875 lbs. is the weight of a column of water whose base is the area *a b*, and perpendicular height the depth of the centre of gravity of *a b*.

2208.

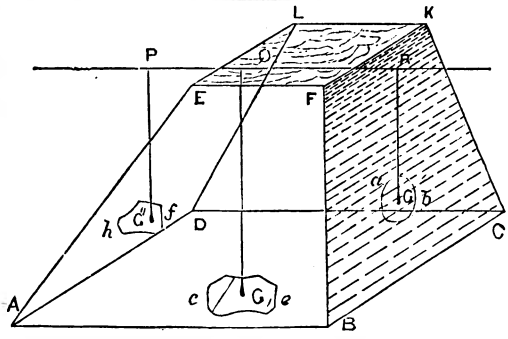

If the area of *c e* on the bottom of the vessel = 5 sq. ft., and Q G_1 = 14 ft. the perpendicular depth of the centre of gravity G_1 below the surface of the water; then the lbs. pressure on the area *c e* = 5 × 14 × 62·5 = 4375 lbs.

Again, if the area of the surface *h f*, on the slanting face A L = 4 sq. ft., P G_2 = 11 ft., G_2 being the centre of gravity of the area *h f*; then the pressure on this slanting surface will be 4 × 11 × 62·5 = 2750 lbs.

As in former cases, the weight of a cubic of water is taken = 62½ lbs. It may be further observed that the positions or inclinations of the surfaces *a b*, *c e*, *h f*, are not taken into account, but merely their areas and the perpendicular distances of the centres of gravity from the horizontal surface of the fluid. On this simple principle rests that department of mechanics termed *hydrostatics;* it is easily demonstrated, as gravity acts on all the particles of the fluid, and each particle presses on that next below it, and, further, because, from the peculiar property of the fluid, this pressure is transmitted in all directions equally.

Ques. Find the lbs. pressure on a floodgate whose breadth is 9 ft. and depth 7 ft.

$7 \times 9 = 63$ sq. ft. area, depth of centre of gravity $= \frac{7}{2} = 3{\cdot}4$ ft. $\therefore 63 \times \frac{7}{2} \times 62\frac{1}{2} = 13781{\cdot}25$ lbs.

Ques. What is the pressure upon 10 ft. length of an embankment, the depth of the water pressing against it being 11 ft.

$$10 \times 11 \times \frac{11}{2} \times 62{\cdot}5 = 37812{\cdot}5 \text{ lbs.}$$

Ques. Required the relation of the pressure upon the four sides of a cubical vessel filled with water, and the pressure on the bottom which is horizontal.

Put n = the length of the side of the cube in feet, $n^3 \times 62{\cdot}5$ = pressure on the base; $n \times n \times \frac{n}{2} \times 62{\cdot}5$ = pressure on one of the sides, $\therefore 2n^3 \times 62{\cdot}5$ = pressure on the four sides. Then $n^3 \times 62{\cdot}5 : 2n^3 \times 62{\cdot}5 :: 1 : 2$; that is, the pressure on the sides is = to twice the pressure on the base. In these calculations the fluid is supposed to be at rest, and acted on only by gravity.

Let A B C D be a vessel filled with water, the pressure Q on any point n, in the side A D, Fig. 2209, is due to the perpendicular depth A n. If in the base D C produced we take D F = D A, the perpendicular depth of the water, then the pressure upon the point D will be due to the pressure of a column of the fluid, whose height is = D F. Draw F A, and from any point n draw $m\,n$ perpendicular to A D; hence $m\,n$ = A n, and the pressure Q on the point n will be due to a column whose height is $m\,n$; the same reasoning applies to any other point in the side of the vessel.

2209.

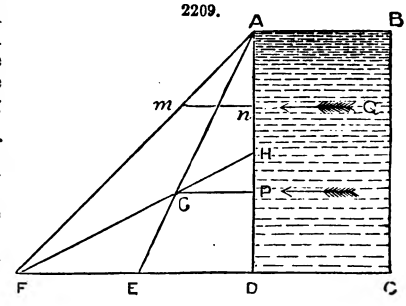

Let us take an example and compare this method of viewing the subject with the one previously enunciated and illustrated.

Ques. What is the pressure on an embankment whose length is 21 ft. and depth of the water A D = 12 ft.

The whole pressure upon the side of the embankment is equivalent to the pressure or weight of a mass of fluid of the form of a wedge, A F D, Fig. 2209.

Area of the triangle A D F = $12 \times \frac{12}{2} = 72$ sq. ft., $\therefore 72 \times 21 = 1512$ cub. ft. content of the wedge. $\therefore 1512 \times 62{\cdot}5 = 94500$ lbs. pressure.

Before it was stated that the pressure in lbs. on the side is equal to a column of water whose base is the area of the surface, and perpendicular height the depth of the centre of gravity.

It is evident, since the side of the embankment is a parallelogram, the depth of its centre of

gravity $= \frac{12}{2} = 6$ ft., area of the surface $= 12 \times 21 = 252$ sq. ft. $\therefore 252 \times 6 \times 62{\cdot}5 = 94500$ lbs., the pressure before found.

It may be easily perceived that there is a certain point in the side A D of an embankment or vessel filled with water, where a single pressure will counterbalance the pressure of the water against the whole side. This point is called *the centre of pressure.*

The *centre of pressure* must evidently lie in the line P G passing through the centre of gravity, G, of the *wedge of pressures*, of which the plane A F D is a cross-section.

Bisect F D in E, and D A in H, draw A E and F H; these lines cut one another in the centre of gravity G. D P $= \frac{1}{3}$ D A, that is, the centre of pressure, P, in this case lies at $\frac{1}{3}$ of D A, from the bottom.

Ques. Required the pressure on the staves of a cylindrical vessel filled with water, the diameter of the base being 10 ft. and the perpendicular height 8 ft.

$3{\cdot}1416 \times 10 = 31{\cdot}416$ ft. the circumference of the cylinder,

$$\therefore 31{\cdot}416 \times \frac{8}{2} \times 8 \times 62{\cdot}5 = 62832 \text{ lbs. pressure.}$$

If the staves of this barrel are to be kept together by a single hoop, that hoop should be $\frac{10}{3} = 3\frac{1}{3}$ ft. from the bottom.

Ques. An embankment H D, Fig. 2210, resists a pressure of water whose *centre of pressure* is at P; it is required to determine by construction the conditions of equilibrium, supposing when the pressure is sufficient to overturn the embankment it will turn upon A, as a centre.

2210.

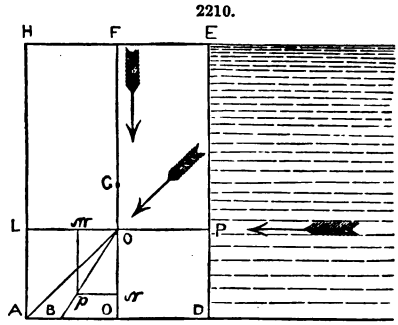

Let F O C be the vertical line drawn through G, the centre of gravity of the embankment. Draw P L perpendicular to F C, intersecting F C in O. Make O n = the lbs. pressure in the embankment, and O m = the pressure of the water, complete the parallelogram O m p n, then if the diagonal O p or O p produced falls as at B inside the base, the embankment will stand, but if the diagonal cuts outside of A, embankment will fall by turning over upon O.

Otherwise, since the pressure of the water P, in pounds multiplied by the length of A L in feet, gives the moment of the water tending to turn the embankment, H D, on A as a centre; and the product of the weight of the embankment, H D, in pounds by the length of A C in feet, gives the momentum of the embankment that acts against the pressure of the water; consequently, when these moments are equal the embankment, A H E D, is upon the point of turning over the point A; if the moment of the water be the greater of the two, the structure will fall, but if it be the lesser of the two, it will stand.

Ques. Suppose 10 ft. to be the length of an embankment whose height, D E, from the surface of the water at E, is 28 ft., A D = 6 ft., will the embankment stand or fall when a cubic foot of the material of which it is composed = 160 lbs.

Surface upon which the water presses $= 28 \times 10 = 280$ sq. ft. Pressure of the water $= 280 \times \frac{28}{2} \times 62{\cdot}5 = 245000$ lbs. $\frac{28}{3}$ = D P = A L = the distance of the centre of pressure P, from the bottom A D. $\therefore 245000 \times \frac{28}{3} = 2286666\frac{2}{3}$ the moment of the water. Weight of the embankment $= 28 \times 10 \times 6 \times 160 = 268800$ lbs. Moment of the embankment

$$= 268800 \times \frac{6}{2} = 806400.$$

This structure must fall, since the moment of the water is greater than the moment of the embankment.

Ques. What must be the height of the water in the last question, so that the embankment may be upon the point of overturning.

Putting x for the required height, then the moment of the water will be

$$x \times 10 \times \frac{x}{2} \times 62{\cdot}5 \times \frac{x}{3} = \frac{x^3}{6} \times 625. \quad \therefore \frac{x^3}{6} \times 625 = 806400. \quad \therefore x = 20{\cdot}59967 \text{ ft., height required.}$$

Ques. Required the thickness of a rectangular embankment that supports a pressure of water rising its full height of 16 ft. when the structure is upon the point of turning over; the weight of a cubic foot of the material, of which the embankment is composed, 128 lbs.

We may take the length of the embankment = 1 ft., for if it stands for 1 ft. of length, it will stand for any other length. $1 \times 16 \times \frac{16}{2} \times 62{\cdot}5 = 8000$ lbs., the pressure of the water.

$$\therefore 8000 \times \frac{16}{3} = \text{the moment of the water.}$$

If x be put for the thickness of the embankment, its moment will be

$$16 \times x \times 1 \times 128 \times \frac{x}{2} = x^2 \times 8 \times 128.$$

Putting $8 \times 128 \times x^2 = 8000 \times \frac{16}{3}$, gives $x^2 = \frac{125}{3}$; $\therefore x = 6{\cdot}45497$ ft.

Ques. Let the cross-section of the embankment, A B C D, Fig. 2211, have the form of a trapezoid, where A E = 6 ft., E B = 5 ft., B C = 15 ft., and the weight of a cubic foot of the material = 120 lbs.; as in former cases, the cubic foot of water is supposed to weigh 62½ lbs.

Let us consider the circumstances with respect to 8 ft. length of embankment, and suppose the cross-section, A B C D, to be divided into two parts, namely, the rectangular part, B C D E, and the triangular part, A E D. It has been before shown that a vertical line, *g* L, passing through the centre of gravity, *g*, of the triangular part, cuts the base, A L, supposed to be horizontal; so that A L = ⅔ of A E = 4 ft. The vertical line, G F, passing through the centre of gravity, G, of the parallelogram, E D C B, cuts the base at F: so that A F = A E + ½ E B = 8·5 ft.

It is supposed that the pressure, P, of the water tends to turn the embankment over a horizontal line passing through A, perpendicular to the plane of the paper. $\frac{6 \times 1}{2} \times 8 \times 120 = 43200$ lbs. weight of the part of which A D E is a cross-section; the moment of this part will be = 43200 × 4 = 172800.

Weight of B C D E = 15 × 5 × 8 × 120 = 72000 lbs. Moment of this part = 72000 × 8·5 = 612000. ∴ 612000 + 172800 = 784800, the moment of 8 ft. length of embankment.

Since the moment of the water will be $15 \times 8 \times \frac{15}{2} \times 62{\cdot}5 \times \frac{15}{3} = 281250$, it follows that the embankment will stand.

Ques. The breadth of a floodgate is 12 ft.; the depth A B = 8 ft.; the centre of the hinge, Q, is 18 in. from the bottom A, and the hinge, R, is 18 in. from the surface, B; the pressure on Q, Fig. 2212, is required.

2211.

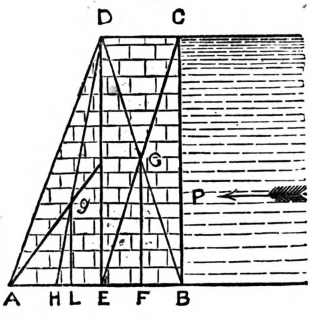

2212.

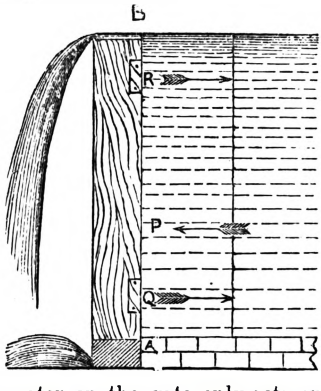

2213.

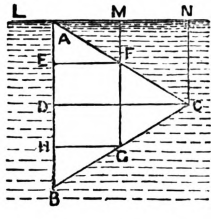

Since one-half the pressure of the water on the gate only acts on the hinges Q and R, that pressure in lbs. will be = $8 \times 6 \times \frac{8}{2} \times 62{\cdot}5 = 12000$ lbs.

Let P be the centre of pressure of the water, then A P = $\frac{8}{3}$; Q R = 8 − 3 = 5 ft.;

$$P R = P B - B R = \frac{8}{3} \times 2 - 1\tfrac{1}{2} = 3\tfrac{5}{6} \text{ ft.}$$

Because the pressure of the water at P is supported by the hinges at Q and R, then, on the principle of the lever, supposing R to be the fulcrum, ∴ putting *x* for the pressure on Q, *x* × Q R = P × P R, that is *x* × 5 = 12000 × $3\frac{5}{6}$; ∴ *x* = 9200 lbs.

Ques. If one side of an equilateral triangle, immersed in a fluid, be perpendicular to the surface of the fluid, find the relation of the pressures on the three sides.

Let the side, A B, be perpendicular to the surface of the fluid L N, Fig. 2213. From F and G, the points of bisection, and therefore the centres of gravity of A C, C B, draw E F, D C, H G, perpendicular to A B.

It is evident that the perpendicular depths, M F = A E, A D, M G = A H, of the centres of gravity of the sides, A C, A B, B C, are as 1 : 2 : 3. Hence the pressure on the side B C is equal to the sum of the pressures on A B, A C.

Geometrical Proposition.—If from any of the angles of a triangle, A B C, Fig. 2214, a line, A *m*, be drawn to *m*, the middle of opposite side, C B, the point G is the centre of gravity of the triangle if *m* G = ⅓ of *m* A.

2214.

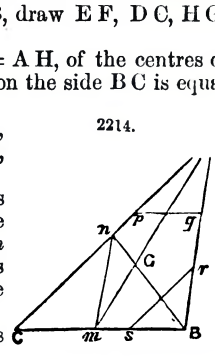

Draw B *n*, bisecting A C, join *m*, *n*, then it is evident that all lines, as *p q*, parallel to C B are bisected by A *m*; hence the centre of gravity of the triangle must lie in A *m*. In the same manner it may be shown that B *n* bisects all lines, as *r s*, parallel to C A; therefore the centre of gravity is also in B *n*; consequently the point G, where A *m* and B *n* intersect, is the centre of gravity of the triangle A B C.

But *m n* = ½ A B, and is also parallel to A B: and because the triangles *m n* G and G A B are similar, *m* G = ½ G A, whence *m* G = ⅓ *m* A.

As the knowledge of the position of the centre of gravity of a body is of much importance in

almost every department of mechanics, and to save the trouble of distinct investigations in cases that often occur, we have thought it proper, in this place, to add the succeeding results.

The centre of gravity, G, *of a trapezium*, A B C D, Fig. 2215.—Let L be the centre of gravity of the triangle A D C, H of A B C, E of A B D, F of B D C; join H L and E F; these lines cut in G, the centre of gravity of A B C D.

To find the centre of gravity, G, *of a quadrilateral*, A B C D, *when two sides*, A D, B C, *are parallel*, Fig. 2216. $a = A L = L D$, and $B K = K C = b$; $K L = 3c$. $K G = c\dfrac{b+2a}{b+a}$.

2215.

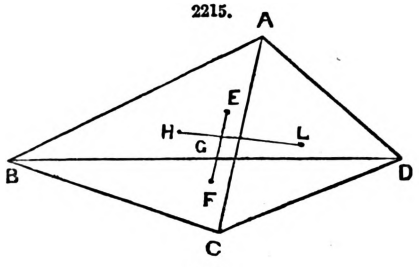

2216.

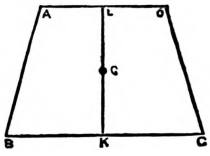

2217.

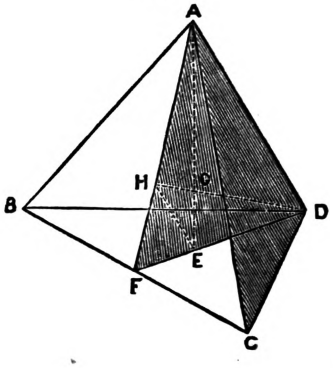

To find the centre of gravity, G, *of any triangular pyramid*, A B C D, Fig. 2217.—Put $A B = a$, $A C = b$, $A D = c$, and $B C = d$, $B D = e$, $C D = f$; then $A G = \frac{1}{4}\sqrt{3(a^2+b^2+c^2)-(d^2+e^2+f^2)}$.

Or, bisect B C in F, draw F D, F A; make $E F = \frac{1}{3}$ of F D, and $H F = \frac{1}{3}$ of A F, and draw H D, A E. The triangles H G E, G A D are similar. $\therefore H G = \frac{1}{3} G D = \frac{1}{4} H D$; $E G = \frac{1}{3} G A = \frac{1}{4} E A$.

Case 2.—When $B C = C D = D B$. Then $A G^2 = \frac{3}{16}(a^2 + b^2 + c^2 - d^2)$.

Case 3.—When $B C = C D = D B$, and also $A B = A C = A D$. Then $A G^2 = \frac{3}{16}(3a^2 - d^2)$.

Case 4.—If all the edges are equal, A B C D becomes a regular tetrædron. Then $A G = \frac{1}{4} a\sqrt{6}$.

To find the centre of gravity of a pyramid whose base is any polygon.—The centre of gravity will be on the line drawn from the vertex to the centre of gravity of the base, and at the distance of $\frac{3}{4}$ of its length from the vertex.

The centres of gravity of the surface of a cylinder, of a cone, and of a conic frustrum, are respectively the centres of gravity of the parallelogram, triangle, and trapezoid, which are vertical sections of the respective solids.

The centre of the surface of a spherical segment is at the middle of its versed sine, or height.

In the cone, as well as in the pyramid, the distance of the centre of gravity from the vertex is $\frac{3}{4}$ of the axis.

In a conical frustrum, the distance of the centre of gravity, measured on the axis from the centre of the less end $= \dfrac{h}{4}\dfrac{3R^2+2Rr+r^2}{R^2+Rr+r^2}$, $h =$ the height; R, r, the radii of the greater and lesser ends.

The last theorem will apply for the frustrum of any regular pyramid, taking R and r for the sides of the two ends.

In a paraboloid, the distance of the centre of gravity from the vertex $= \frac{2}{3}$ of the axis.

In the frustrum of a paraboloid, the distance of the centre of gravity from the centre of the lesser end, along the axis $= \dfrac{h}{3}\dfrac{2R^2+r^2}{R^2+r^2}$; h denotes the height, R and r the radii of the greater and lesser ends.

To find the centre of gravity, G, *of a circular arc*, M A m, Fig. 2218.—From the middle point of the arc A, draw A O to O, the centre of the circle; put $x = A P$, $y = M P = P m$, radius $A O = r$; the length of the half-arc, or $M A = z = A m$. Then $O G = \dfrac{ry}{z}$.

2218.

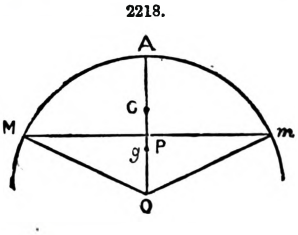

2219.

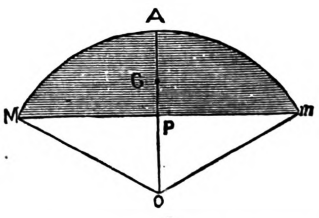

When the arc is a semicircle, then $y = 1$; and $z = \frac{1}{2}\pi = 1{\cdot}57079$, or $\dfrac{y}{z} = \dfrac{1}{1{\cdot}57079} = {\cdot}63662$; and then $O G = {\cdot}63662\, r$.

To find the centre of gravity, G, *of a circular segment*, M A m, Fig. 2219.—$O G = \dfrac{M P^3}{3 \text{ area of } A M P}$.

When the circular segment becomes a semicircle.

$$O G = \frac{r^3}{(3 \text{ quadrants}) \text{ radius } r} = \frac{r^3}{2 \cdot 356194\, r^2} = \frac{}{2 \cdot 356194} = \cdot 42441\, r.$$

In a circular sector, O B A C, Fig. 2220, the distance from the centre of the circle to the centre of gravity, or O G, $= \frac{2cr}{3a}$; in which r = O A; c = B C; a = the length of the arc B A C.

2220.

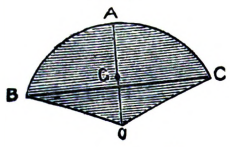

2221.

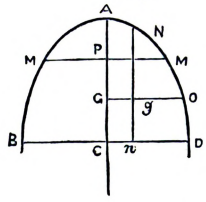

2222.

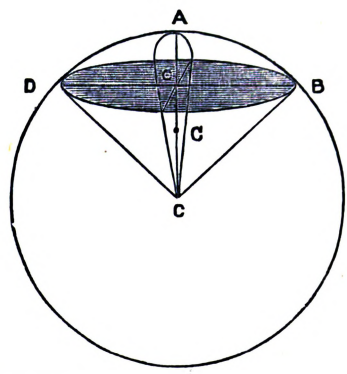

To find the centre of gravity of a common parabola, Fig. 2221. A G $= \frac{3}{5}$ A C.

To find the centre of gravity, g, of the semi-parabola, C A D, Fig. 2221, take G $g = \frac{3}{8}$ C D.

To find the centre of gravity, G, *of the sector of a sphere*, O D A B, Fig. 2222.—Let A C $= x$, O D $= r$, then A G $= \frac{1}{8}(2r + 3x)$. When $x = r$, the sector becomes a hemisphere, then A G $= \frac{5}{8} r$.

To find the centre of gravity, G, *of the segment of a spheroid.*—Let A be the vertex of the fixed axis a, putting c for the length of the revolving axis, then $A G = \frac{4a - 3x}{6a - 4x} x$.

When the segment becomes a hemispheroid, then $x = \frac{a}{2}$ and $\frac{4a - 3x}{6a - 4x} x = \frac{5}{8} x$, for the distance of the centre of gravity from the vertex, $\therefore \frac{3}{8} x$ is its distance from the centre of the base.

If $c = a$, the spheroid becomes a sphere, and, as the theorem is independent of c, it is alike applicable to both solids and their corresponding segments.

To find the centre of gravity of a hyperboloid.—Putting g = the distance of the centre of gravity G, from the vertex A, and taking $y^2 = \frac{c^2}{a^2}(ax + x^2)$; $g = \frac{4a + 3x}{6a + 4x}$

The position of the centre of gravity, G, of any irregular body, A B C, may be determined when balanced in the manner represented in Fig. 2223, and applying the proportion, W : w :: a : z = R Q. $\therefore z = \frac{a w}{W}$. R S is put = a, and is horizontal. K L, Q G, S T are perpendicular to S R.

2223.

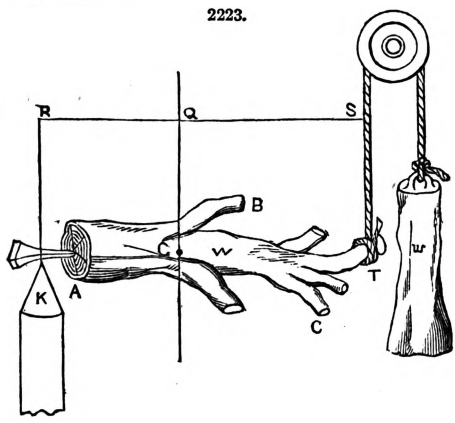

2224.

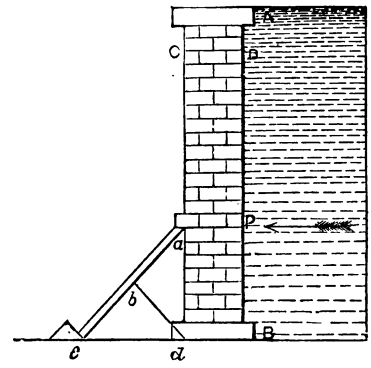

Ques. Let the shores, $a c$, Fig. 2224, support the wall, A C B, that sustains a pressure of water up to the top A; the stay delivers its thrust opposite the centre of pressure P, of the water; the thrust on the stays is required, when the embankment is upon the point of turning over. Suppose A B = 15 ft.; C D = 3 ft.; the weight of a cubic foot of the material of which the wall is composed 120 lbs.; $a d$ = P B = 5 ft.

We will estimate for 8 ft. length of wall, but any other length may be selected. Weight of wall $3 \times 15 \times 120 = 43200$ lbs. Moment of the wall $= 43200 \times \frac{3}{2} = 64800$.

Let $b d$ be perpendicular to $a c$; $\therefore b d = \sqrt{\frac{25}{2}} = \frac{5}{2}\sqrt{2} = 3 \cdot 5355$.

Put x for the thrust on the stays, $a c$, that prop 8 ft. length of wall; the moment of this thrust will be $x \times 3 \cdot 5355$.

Moment of the pressure of the water will be

$$15 \times 8 \times \frac{15}{2} \times 62{\cdot}5 \times \frac{15}{3} = 281250. \quad \therefore x \times 3{\cdot}5355 + 64800 = 281250 \quad \therefore x = 61222 \text{ lbs.}$$

Ques. Required the modulus of stability of the stone structure, A D H O, Fig. 2225. A D = 3 ft.; O H = 8 ft.; B R, drawn from the middle of A D to the middle of O H = 18 ft.; the height of the water, H D = 17·4 ft.; weight of a cubic foot of the material of which the wall is composed = 200 lbs.

It is only necessary to investigate the action of the forces on a length of one foot. A D H O is a cross-sector of the wall.

$$\text{R G} = \tfrac{1}{3}\text{B R}\,\frac{\text{O R} + \text{A D}}{\text{O R} + \text{A B}} = 6\,\frac{4+3}{4+1\frac{1}{2}} = \frac{84}{11}, \text{ G being the centre of gravity of the wall.}$$

$$\text{R T} = 4 - 1\tfrac{1}{2} = \tfrac{5}{2} \qquad \text{R B} : \text{R T} :: \text{R G} : \text{R S} = 1\tfrac{2}{33}. \quad \therefore \text{S O} = 5\tfrac{2}{33}.$$

$\text{B T}^2 = \text{B R}^2 - \text{R T}^2$, that is, B T is equal to the square root of $18^2 - (\frac{5}{2})^2 = \sqrt{1271} = 17{\cdot}82554$.

Pressure of the wall, acting in the line G S, through the centre of gravity G =

$$\frac{8+3}{2} \times 1 \times 17{\cdot}82554 \times 200 = 19608{\cdot}094 \text{ lbs.}$$

The centre of pressure of the water is at P, and $\text{H} \urcorner = \frac{17{\cdot}4}{3} = 5{\cdot}8$ ft. = C S.

Pressure of the water =

$$17{\cdot}4 \times 1 \times \frac{17{\cdot}4}{2} \times 65{\cdot}2 = 9211{\cdot}25 \text{ lbs.} \quad \therefore\ 19608{\cdot}094 : 5{\cdot}8 :: 9211{\cdot}25 : 2{\cdot}724652 = \text{C}m = \text{S}n.$$

In the parallelogram C S n m, if the line C S = 5·8, represents the pressure of the action in a vertical line passing through its centre of gravity; C m = 2·724652 represents the whole pressure of the water acting on P, its centre of pressure.

The ratio of S O to S n is termed the *modulus* of stability, which, in a good structure, should not be much less than $\frac{1}{2}$. In the present case, $\frac{\text{S}n}{\text{S O}} = \frac{2{\cdot}724652}{5\frac{2}{33}} = {\cdot}5384$, which is greater than ·5. Hence the structure is secure.

2225.

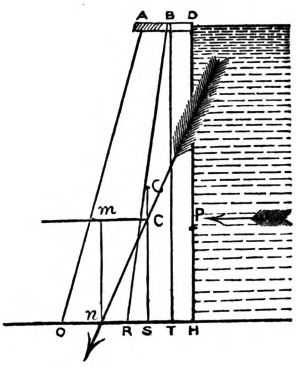

2226.

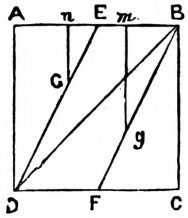

2227.

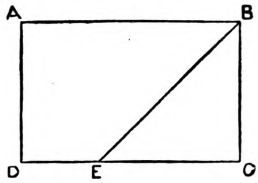

2228.

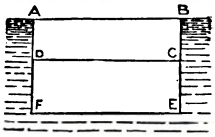

A square, A B C D, Fig. 2226, is immersed vertically in a fluid, the side A B coinciding with the surface; if the diagonal, B D, be drawn, compare the pressure on the triangles A B D, B D C.

Bisect A B, D C, in E and F; join D E, B F; take $\text{E}G = \frac{1}{3}\text{E D}$, and $\text{F}g = \frac{1}{3}\text{B F}$; G and g are the centres of gravity of the triangles A B D, B D C.

D E is equal and parallel to B F, $\text{B}g = 2g\text{F} = 2\text{E G}$; ∴ the perpendicular mg = twice the length of the perpendicular G n.

∴ The pressure on the triangle B C D is double the pressure on the triangle A B D. The same is true in the case of a rectangle, and the proportions remain the same whatever be the inclinations of the immersed planes, provided only that A B coincides with the surface of the fluid; for the perpendicular depths of the centres of gravity will be altered in the same ratio.

Given a rectangular parallelogram immersed vertically in water, with one side A B, Fig. 2227, coincident with the surface; it is required to draw from one of the angles, B, to the base a straight line, B E, so that the pressures on the parts A D E B, E B C, may be in the given ratio of m to n.

It is evident that the pressure on the whole parallelogram is to the pressure on the triangle, so is $m + n$ to n.

Put A B = a; A D = B C = b, and E C = x; $\quad \therefore a \times b \times \frac{b}{2} : \frac{1}{2}x \times b \times \frac{2b}{3} : m + n : n$

$$\therefore \frac{ab^2}{2} : x\,\frac{b^2}{3} :: m + n : n \quad \therefore x = \frac{3}{2}\,\frac{n}{m+n}\,a.$$

To compare the pressures on the rectangles A C, C F, Fig. 2228, immersed vertically in water, A B coinciding with the surface of the water.

The pressure on A B C D : that on A B E F :: A D × $\frac{1}{2}$ A D : A F × $\frac{1}{2}$ A E :: $\text{AD}^2 : \text{AF}^2$; ∴ the pressure A B C D : the pressure on D C E F :: $\text{AD}^2 : \text{AF}^2 - \text{AD}^2$. Put A F = b and D A = x, then D F = $b - x$.

When the pressure on A C is equal to the pressure on C F, then

$$x^2 = b^2 - x^2 \quad \therefore\ 2x^2 = b^2;\ \text{or } x = \frac{b}{\sqrt{2}}. \quad \text{Or } 1 : \sqrt{2} :: x : b.$$

If the pressure on A B C D is to be to the pressure on D C E F, 5 to 7, then

$$x^2 : b^2 - x^2 :: 5 : 7 \quad \therefore\ 7x^2 = 5b^2 - 5x^2 \quad \therefore\ x = \sqrt{\frac{5}{12}}\, b.$$

Let A C D F, Fig. 2229, be a rectangular parallelogram immersed in water, the side A C coinciding with the surface, A B = a; A F = b. F B D is the inscribed parabola; find the ratio of the pressure on the parallelogram and the pressure on the parabola.

If G be the centre of gravity of A C D F, then B G = $\frac{b}{2}$ and the pressure

$$= ab \times \frac{b}{2} \times 62\tfrac{1}{2} = \frac{ab}{2} \times 62\tfrac{1}{2}.$$

The area of the parabola = $\frac{2}{3}$ of the parallelogram; B g = $\frac{3}{5}$ b, if g be the centre of gravity of the parabola; $\therefore \frac{2ab}{3} \times \frac{3b}{5} \times 62\tfrac{1}{2} = \frac{2ab^2}{5} \times 62\tfrac{1}{2}$ = the pressure on the parabola

$$\therefore \frac{ab}{2} \times 62\tfrac{1}{2} : \frac{2ab^2}{5} \times 62\tfrac{1}{2} :: \tfrac{1}{2} : \tfrac{2}{5}$$

$\therefore$ 5 : 4, is the ratio of the pressure on the parallelogram to the pressure on the parabola.

Show that if a hollow sphere be filled with a fluid, whose specific gravity is s, that the whole pressure against the internal surface is three times the weight of the contained fluid.

Let r = the radius: then $4\pi r^2$ × internal surface, π as usual = 3·14159265. $\therefore$ the pressure $= 4\pi r^2 \times r \times s = 4\pi r^3 s$; the solid content of the sphere = $\frac{4}{3}\pi r^3$, and its weight = $\frac{4}{3}\pi r^3 s$. $4\pi r^3 s : \frac{4}{3}\pi r^3 s$ :: 1 : $\frac{1}{3}$ or 3 : 1.

2229.

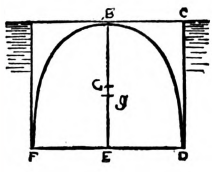

2230.

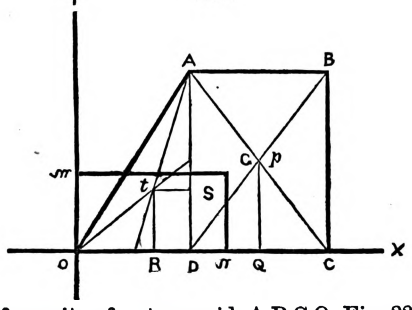

2231.

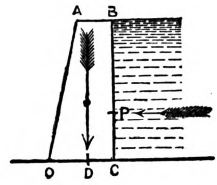

Let G be the centre of gravity of a trapezoid A B C O, Fig. 2230, A B = a, and parallel to O C = b; B C = c, and perpendicular to both A B and O C. The straight line O Y is drawn perpendicular to O C X, it is required to find general expressions for the perpendicular co-ordinates x = m G = O n, and Y = n G = O m.

Let p be the centre of gravity of the rectangle A B C D, p Q = $\frac{c}{2}$ and Q O = $b - \frac{a}{2} = \frac{2p - a}{2}$.

If t be the centre of gravity of the triangle O A D, then the co-ordinates of t will be

$$t\,\mathrm{R} = \tfrac{1}{3}\,\mathrm{A\,D} = \tfrac{1}{3}\,\mathrm{B\,C} = \frac{c}{3}. \quad \mathrm{O\,R} = \tfrac{2}{3}\text{ of O D} = \frac{2(b-a)}{3}.$$

Area of A B C O × G n = area of A B C D × p Q + area of A O D × t R; that is,

$$c\,\frac{a+b}{2}\,y = ac \times \frac{c}{2} + \frac{(b-a)c}{2} \times \frac{c}{3} \quad \therefore\ y = \frac{c}{3}\left(1 + \frac{a}{a+b}\right).$$

Again the area O A B C × G m = area of A B C D × O Q + area of A O D × R O; that is,

$$c\,\frac{b+a}{2}\,x = ac \times \frac{2b-a}{2} + \frac{c(b-a)}{2}\,\frac{2(b-a)}{3} \quad \therefore\ \frac{b+a}{2}\,x = a\,\frac{2b-a}{2} + \frac{(b-a)^2}{3}$$

$$\therefore\ x = \frac{2b}{3} - \frac{a^2}{3(a+b)}.$$

Ques. Given in A B C O, Fig. 2231, which represents the cross-section of an embankment made of brickwork, a cubic foot of which weighs 112 lbs.; A B = 1 ft., parallel to O C = 2 ft.; find the height, B C (which is perpendicular to both A B and O C), when the embankment is upon the point of overturning upon the edge at O by the pressure of the water which stands at the brim, B.

Put v = B C, the required height, then the pressure of the water on 1 ft. length of embankment $= v \times 1 \times \frac{v}{2} \times 62{\cdot}5 = \frac{v^2}{2} \times 62{\cdot}5$. Moment of the water = $\frac{v^2}{2} \times 62{\cdot}5 \times \frac{v}{3} = \frac{v^3}{6} \times 62{\cdot}5$.

If G be the centre of gravity of the trapezoid A B C O, then by the last proposition,

$$\mathrm{O\,D} = \frac{2}{3} \times 2 - \frac{1}{3(1+2)} = \frac{11}{9}.$$

Pressure of a length of 1 foot of the embankment $= \frac{1+2}{2} v \times 112 = 168\ v$ lbs. · moment of embankment $= 168\ v \times \frac{11}{9}$. $\therefore \frac{v^3}{6} \times 62{\cdot}5 = 168\ v \times \frac{11}{9}$; $\therefore v = \sqrt{19{\cdot}712} = 4{\cdot}439821$. Weight of embankment $= 168\ v = 745{\cdot}89$ lbs.

2232.

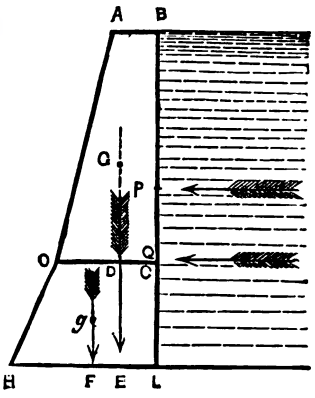

Ques. Let the embankment A B C O, Fig. 2232, be the same as in the previous question; now if the embankment be raised until H L = 3 ft., what must be the perpendicular depth B L, so that when the part A B C O be upon the point of overturning at O, at the same time the whole embankment, A B L H, will be upon the point of turning over the edge through H

$$E L = D C = 2 - \frac{11}{9} = \frac{7}{9} \quad \therefore H E = 3 - \frac{7}{9} = \frac{20}{9}$$

$\therefore$ the moment of O A B C round the point H, will be $745{\cdot}89 \times \frac{20}{9}$. If g be the centre of gravity of O C L H, then

$$H F = \frac{2}{3} \times 3 - \frac{4}{3(2+3)} = \frac{26}{15};$$

putting z for B L, the moment of the part O C L H round H as a fulcrum will be $\frac{2+3}{2}(z - v)(112) \times \frac{26}{15}$.

The moment of the water acting in opposition will be $z \times 1 \times \frac{z}{2} \times 62{\cdot}5 \times \frac{z}{3} = \frac{z^3}{6} \times 62{\cdot}5$

$$\therefore \frac{z^3}{6}(62{\cdot}5) = \frac{2+3}{2}(z - 4{\cdot}43982)(112)\frac{26}{15} + 745{\cdot}89 + \frac{20}{9}.$$

$$\therefore z^3 - 46{\cdot}592\, z = -47{\cdot}73689344; \qquad [\beta]$$

$$\therefore z = 6 \downarrow 0,4,0,'5'1'9'9'5 = 6{\cdot}24037812.$$

Sand Dams in Holland.—The following description of the method adopted in preparing the foundation and in building the bridge over the Poldervaart, on the line of the Amsterdam and Rotterdam Railway, by the Chevalier Conrad, translated and compiled by Charles Manby, in the 'Trans. Inst. C. E.,' includes an interesting account of these important *dams*.

The Poldervaart is a canal for the purpose of conveying away the waters from the Polders, which it encompasses, in the commune of Kethel; it is under the government of the Hoogheemraadschap, or Direction of the High Dykes, of Delfland, and runs from the river Schie to the Five Sluices, on the river Maas. The railway crossing this canal at a considerable angle, rendered a skew bridge necessary, and at length the following provisions were agreed upon:—

The bridge was to have three openings; the centre one, for the navigation, to measure 13 ft. 1 in., and the two lateral openings for the drainage 21 ft. each, giving a total width of water-way of 54 ft. 11 in., while the level of the timber planking of the land piers was fixed at 9 ft. 8¾ in., below A.P., and that of the top of the landings at 2 ft. 7½ in. above A.P.

Although the treacherous quality of the soil was generally known, and it was evident that great difficulties must be encountered, yet such harassing casualties as did actually occur were scarcely anticipated, and they proved in reality greater than could have been imagined. The means, therefore, that were adopted for obtaining solid foundations, and for rendering the structure firm under the passage of heavy trains, may, it is hoped, afford data for the prosecution of similar works in boggy ground, and aid in avoiding expensive experiments in parallel cases.

The general plan and the details of the work are given in Figs. 2232A to 2232D.

Fig. 2232A shows the general situation of the bridge, with the excavation for the foundations, surrounded by dykes, or dams of sand, and the side-cut, for diverting the water during the progress of the construction. This lateral canal was cut for the purpose of preventing any impediment to the navigation, and for the temporary outlet of the drainage water.

Fig. 2232B gives the general construction of the bridge when finished, and the section of the strata as shown by the borings.

Figs. 2232C, 2232D exhibit the accidental movements of the ground which occurred during the progress of the works; and the various details alluded to in the description, which necessarily assumes almost the character of a journal, or diary of the proceedings.

As in the course of this description the subsidence of the ground will be frequently alluded to, it is necessary to point out the difference existing between the principal kinds of subsidence which occur in the execution of works in Holland.

They may be classified under three heads, completely distinct from each other:—

1. Sinkings (Verzinkingen) are those sudden movements whereby, without any warning or perceptible preliminary motion, or any indications such as cracks, bends, or fissures, a considerable area of ground entirely disappears, as if by some unseen operation of natural causes the spot had been undermined; but enough solidity remained to preserve the equilibrium, until it was destroyed by some apparently slight cause.

2. Yieldings (Verzakkingen) are the slow but constant movements which are usually indicated by previous crevices or undulations of the surface, with corresponding gradual elevations around. These are occasioned by treacherous subsoils, dislocations of the strata, the saturation of the ground on account of the absence of proper drainage, or the destruction of the equilibrium by the overloading of a particular spot, calculated to bear only a certain weight.

3. Slips (Verschuivengen) arise from the separation of a mass of fresh earth from old banks

upon the side of which it has been thrown, without, however, being well amalgamated with them. These slips arise either from the action of wet, or from the earth being placed at a greater angle than it can stand at.

These several movements are entirely distinct from the subsidence of new-made ground, and can easily be distinguished from their peculiar features.

After the completion of the side-cut, and determining the position of the inclosure made by dams of sand, and the excavation of the foundation pit, the work was commenced on the 20th of April, and without any previous indications of extraordinary difficulties the casualties commenced.

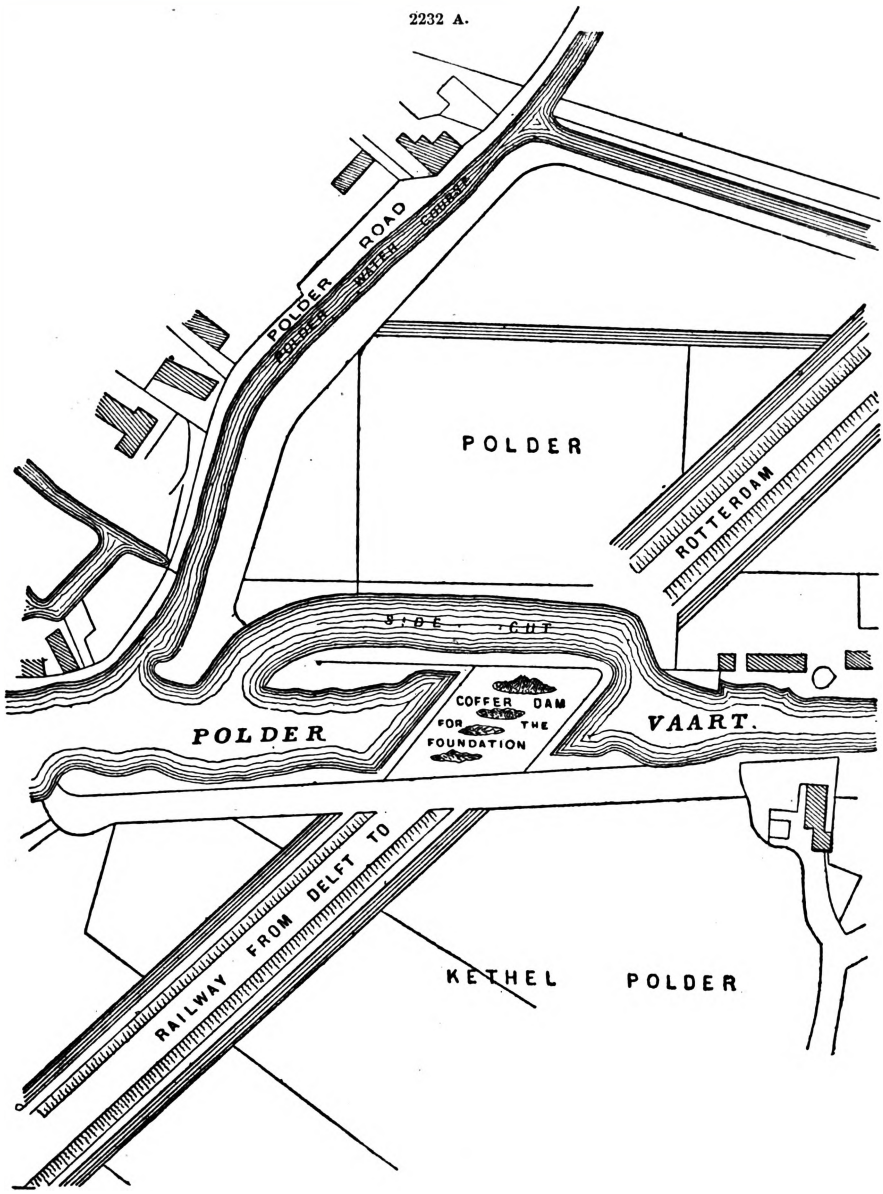

The first process was that of shooting in sand to form the dam A B, Fig. 2232c; this progressed satisfactorily until April 23rd, by which time a length of 71 ft. was formed to above the water level. At about five o'clock in the evening, during a violent thunderstorm, the dam suddenly sunk 29 ft., and simultaneously an immense mass of bog earth C, Fig. 2232c, of an area of 4489 sq. ft., rose to a considerable height above the water level. From the soundings then taken, and the more accurate investigation of the locality, it was evident that an extensive subterraneous shifting of the bog-earth had occurred; and as it was more than probable there would be a recurrence of it, without the existence of any power of prevention, it became necessary to direct attention to some means of rendering the movement as little injurious as possible. It was therefore determined to discontinue for a time the depositing of sand, and to construct a side-dyke D E F G, Fig. 2232c, in order to pre-

serve the dyke of the North Kethel Polder, the security of that spot being of the utmost importance; also to place the layers of fascines for the railway embankments, and to enlarge and heighten the earthwork by additions of sand. The passage of the side-cut having become interrupted by the rising of the bottom, it was determined to prolong it to beyond the sand-dams, so as to keep it open for the navigation.

The shooting in of sand was then continued uninterruptedly until April 30th, whilst the construction of the side dyke D E F G was continued with all speed, as another subsidence at *a, b*, of 67 ft. 9¾ in. long, and from 11 ft. 3¾ in. to 19 ft. 4½ in. deep, was discovered in front of the old North Kethel Polder, by which the up-raised mass of bog had acquired an additional extension.

In order to prevent the sinking, and to support the base of the North Kethel Polder dyke, which was apparently almost without any foundation, another deposit of sand was made at H I, at a distance of about 32 ft. 3½ in. from the foot of the dyke, of the entire width of the foundation pit, with a number of transverse dams, *e d*, *c d*, limiting the extent of any accidental movement which might occur.

On the 5th of May another sinking, 48 ft. 5½ in. in length, and from 9 ft. 8¼ in. to 19 ft. 4½ in. depth, took place in front of the North Kethel Polder dyke, still further increasing the size of the mass of upraised bog-earth C, when the same means of repair as had been before employed were again resorted to.

Considerable agitation of the water in the canal Poldervaart was observed on the 7th of May, and another sinking occurred in front of the same spot, to such an extent that the sand, which had been thrown in front of the dyke, subsided over a length of 77 ft. 6¼ in. to a depth of from 9 ft 8¼ in. to 21 ft. The mass of upraised bog-earth C had thus become so enlarged as to choke up the mouth of the side-cut, which, having been already lengthened, was then extended to the Kethelvaart.

The deposit of sand was still continued, and at times masses of bog-earth rose between the dams, of the areas of 3357 ft. and 1882 sq. ft. respectively, at K K, which at first were connected with the other masses, but were separated by the constant shooting in of the sand; the sand-dam, which had been raised above the water, still sinking at times to considerable depths.

On the 15th of May, sand was first deposited in front of the second dam L M,, and the same symptoms appeared at N, as near the other dam, only to a less extent. An extension of 64 feet 7 in. was therefore given to the side dyke, behind the North Kethel Polder dyke.

May 26th.—The turf-bog inside the foundation-pit was found to have been raised 1 ft. 7¼ in. above A.P., by the shooting in of the sand for forming the dams A B and L M Fig. 2232c, which by the 28th of May were raised above the water level, and the foundation-pit was completely surrounded. The draining of the pit was commenced the next day, and the deposit of sand was still continued, in order to increase the strength of the dams. By the 3rd of June the pit was drained, and the excavation of the bog-earth was commenced.

On the 9th of June a testing pile, 53 ft. 11¼ in. in length, was driven into the foundation, to within 12 in. of its head; another pile of 69 ft. 9¾ in. was then driven to within 6 in. of the head, when it was resolved to drive a large number of these piles, and to alter the original design of separate foundations for each pier into one general foundation, extending throughout the base of the whole structure. It was then discovered that the bog-earth had again risen considerably, whilst the dams had sunk. In consequence of this, the excavation of the pit was discontinued, and the driving of an entire system of piling was commenced, with the intention of subsequently digging out the foundation to the necessary depth. After, however, driving 65 piles, the pit and the piles together appeared to have moved bodily nearly 7¾ in. This arrested the process of pile-driving for a time, until other measures of security should have been devised.

On the 24th of June a row of close-piling O P, Fig. 2232D, was driven, in order to support the bank of the side-cut, where the greatest amount of movement was perceptible, and for preventing it from slipping into the pit. At the same time it was resolved to form a sunk coffer-dam of sand, loaded with coarse rubble Q R S T, within the foundation-pit. This coffer-dam was sunk to a depth of 5 ft. 9¾ in. by a breadth of 9 ft. 8¼ in., to enclose that part of the pit in which the piling was to be driven.

By the 4th of July, the piling for securing the dyke of the side-cut was completed, and that for the land pier on the Kethel side V V was commenced, as the movement of the ground appeared to have ceased at that spot. The sand coffer-dam Q R S T, being completed, the greatest deviation among the piles was found to be about 5 ft. 9¾ in. It, however, became necessary to stop the excavation, as the bottom continued to rise fast, whilst the dyke of the side-cut began to sink, and numerous fissures were apparent.

On the 3rd of August the excavation was again commenced, with the intention of taking out the whole of the bog-earth within the sand coffer-dam, and filling the space with sand.

On the 5th of August, it was discovered that the dyke A L, and the row of piles O P were slipping, and had assumed a concave form at O P; the sand-dam A B, on the north side, becoming more extensively cracked and threatening to give way, which would have caused an irruption of the canal into the foundation-pit.

An examination of the strata was then made, by boring nearly in the centre of the foundation-pit, when it was found that, at a depth of 17 metres under A.P. (54 ft. 11 in.) a bed of coarse river sand would be arrived at. The section of the strata shown by this boring is given in Fig. 2232B.

The sand bedding having been put in, the pit and the piling proceeding regularly, it was determined to form a rectangular foundation at two points laterally with the side-cut. The row of piles O P, Fig. 2232D, had by this time become about 6 ft. 5½ in. concave.

The fixing of waling-pieces was then commenced; but by the time six of them had been fixed, and the intervening spaces filled with sand and rubbish, the portion near the back dyke had swerved 5¾ in. in a length of 29 ft. 0¾ in. These deviations rendered necessary the driving of more piles outside the foundation, at the foot of the sand-dam, in such a manner that when the planking for the foundation was ready, the diagonal timber could be affixed, so as to prevent any further swerving,

3·00 FROM A.P. DOWN TO THE LEVEL OF THE GROUND.
RAMMED SAND
BOG EARTH.
CLAY.
LOOSE BLUE CLAY.
STIFF BLUE CLAY
BOG TUGS
CLAY
BLUE CLAY
COARSE RIVER SAND
2·60
2·20
0·70
4·80
2·00
0·70 0·40 0·60 0·60
2232 B.

By the 8th of September, the whole of the foundation was completed, and the first stone of the bridge was laid, many parts being then strengthened beyond the original design. The two buttresses, built upon the rectangular projecting foundations, behind the land pier, are portions of these alterations, which were rendered necessary by the nature of the ground.

After this period no perceptible movement of the ground occurred, and the structure was completed without further impediment.

In reviewing these details, the circumstances of the sinking of the first portion of the dam, and the simultaneous rising of the mass of bog-earth during a heavy thunderstorm, deserve particular notice.

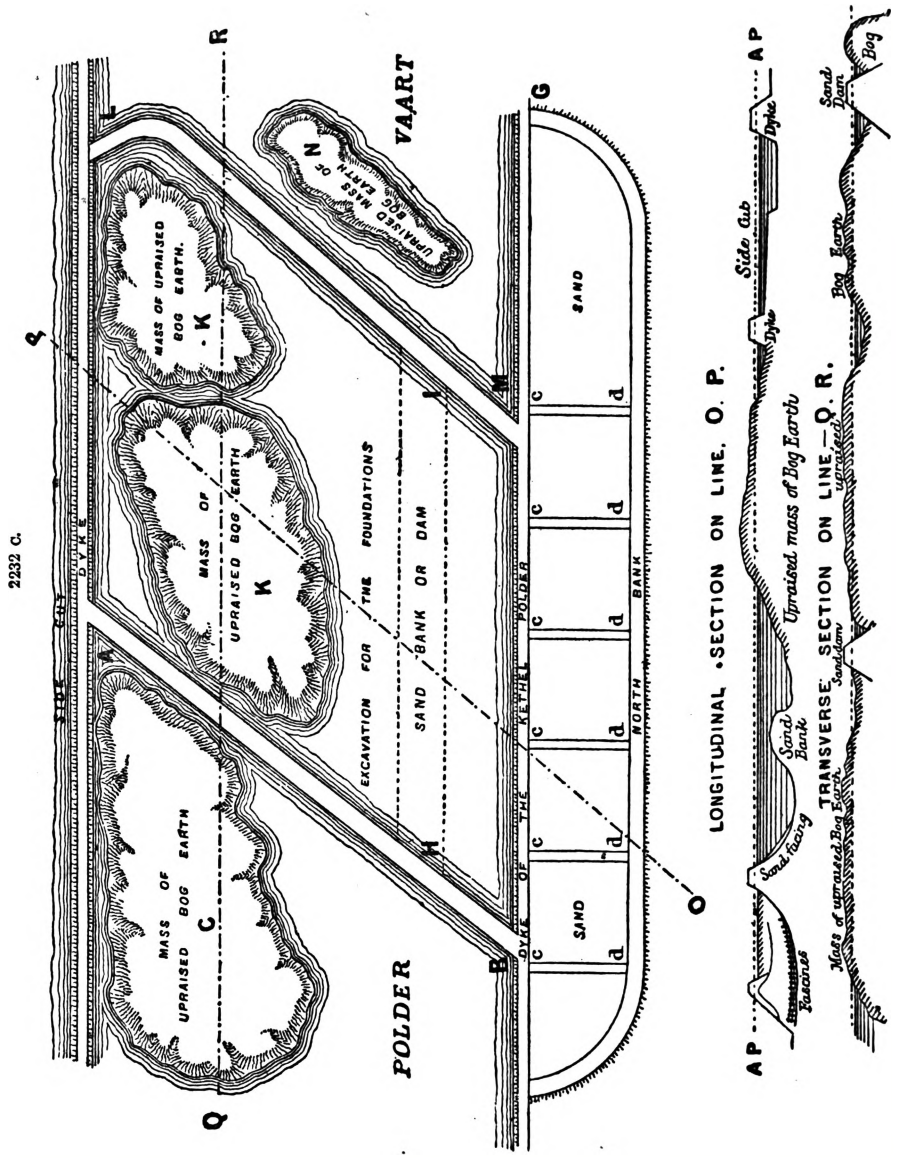

The sudden elevation of masses of bog-earth, in the canals and drains of Holland during storms, is not uncommon. It would appear that the adhesion of the masses of bog-turf to the bottom is so slight that the vibration communicated to the water by the thunder suffices to destroy the equilibrium; and the bog-turf, which from its slight specific gravity will float in water, even when saturated, instantly rises to the surface. When therefore, as in this case, a heavy mass of sand is placed in the vicinity of such bog-earth, the bottom is unable to resist the pressure, and the least vibration causes it to break through the crust and become engulphed amidst the lighter material, which it forces upwards in the direction of the least resistance.

The sudden elevation of the masses of bog earth in this instance may be easily accounted for. The first portion was elevated above the water level, and a cavity was formed of far greater cubic content than the sand-dam which it received. It was evident also that the cavity extended as far

as the dyke of the canal Poldervaart, which would probably have been seriously injured if it had been recently constructed; but having been formed for some years, it had been consecutively weighted with new materials, as it had subsided until the mass had become compact, and had probably penetrated through the upper crust, until it rested upon the more solid strata beneath, and thus the dykes after some time, although their dimensions are apparently inconsiderable, attain great strength, and offer effectual resistance in cases of the sinking of the bottom. Nevertheless, if a subsidence had occurred in the immediate vicinity of the old dyke, a portion might have slid into the chasm, and the whole dyke would have sunk outwards. It was to prevent such a rupture and its injurious consequences that the sand-dam B M, Fig. 2232c, was formed, so as to consolidate the ground immediately beneath the foot of that part of the old dyke, and that another external sand-dyke D G was raised behind it.

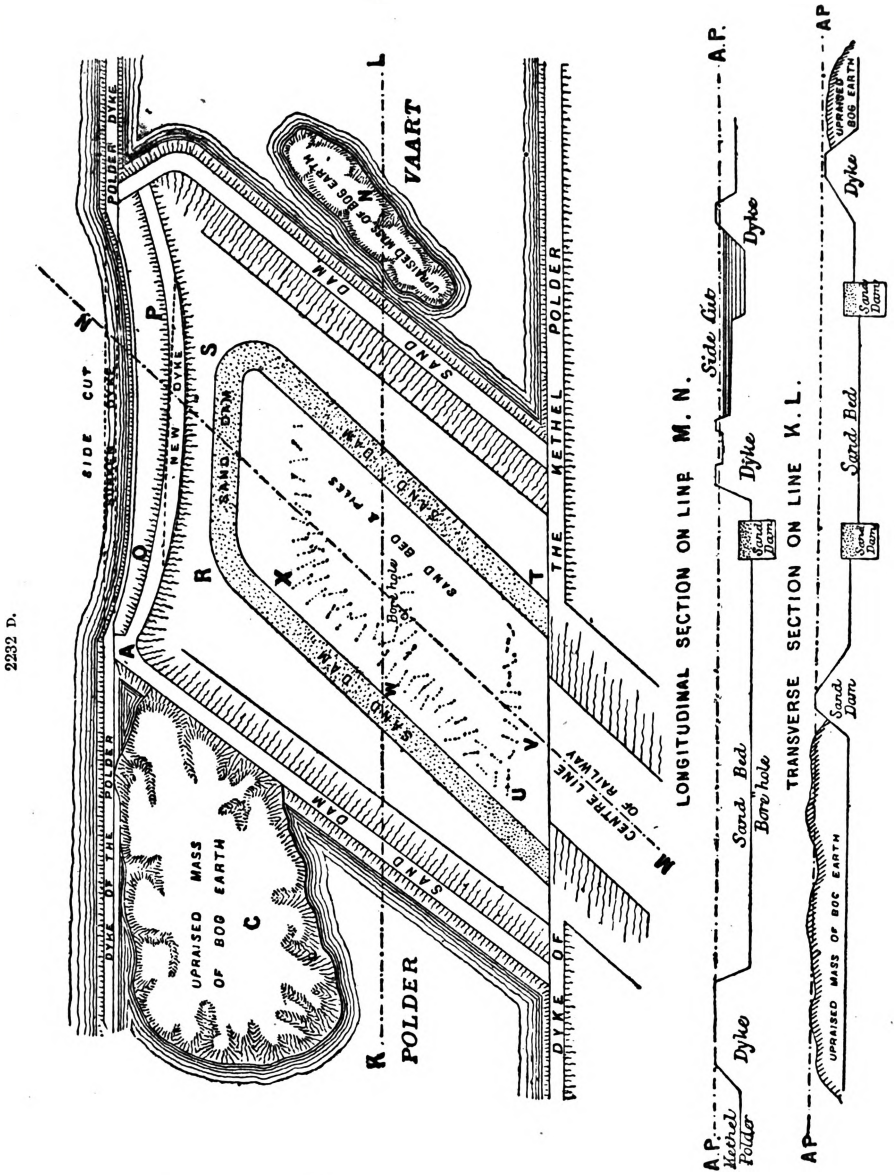

The journal of the proceedings shows that but for these precautions and the incessant filling in of sand, the new works would not have acquired solidity enough to support the old dykes, and to have prevented their rupture.

The importance of loading the spot with sand was demonstrated by the fact of the elevation of the masses of bog-earth before the draining was commenced, and even after the pit was pumped out, when the earth was relieved from the pressure of the water.

It might have been expected that in consequence of the piling the ground would have become more compact; but such was the nature of the substratum that, as has been described, the whole of the piles were forced by the general movement out of their direction, and a cessation of piling, for a

time, was deemed desirable. The vibration communicated by the operation of driving the piles probably assisted this movement.

The extent of the movement was also shown by the line of close piling O P, Fig. 2232D, being unable to resist the weight impinging upon it, and its being forced outwards in a concave form.

The internal dam of sand Q R S T, sunk in the pit and loaded with rubbish, proved the most efficacious means for restraining the movement and for enabling the bog-earth to be excavated from within the pit; as unless that had been effectually done, the foundations could not have been securely laid. Great precautions were necessary in excavating this bog-earth, and it was only accomplished by cutting out consecutive masses of 3 ft. $2\frac{3}{4}$ in. sq., and immediately filling the spaces up with sand; thus exchanging the light for a heavy material, proceeding round the limits of the spot, and closing inwards, until the whole area was covered with sand, or those portions of bog-earth that remained were, by the process, rendered so compact as to be innocuous.

The operation succeeded in arresting the movement, so as to permit the piles to be driven through the artificial ground, and the foundation was rendered sufficiently solid to bear the bridge.

After what has been described it is perhaps scarcely necessary to make any general remarks. It may, however, be argued, that for obtaining a solid foundation in bog, or other light soils of similar character, filling in sand, or other dry material, in large quantities, is the simplest method; but that stability cannot be insured until the whole of the light soil has been removed and the space has been filled by more compact material.

Whenever, then, the new works are isolated, so that the process cannot cause any injury around, the result could be attained by dredging trenches under water, down to the solid strata, to enable the new material for forming the dams to be filled in; or the filling in of the sand could be commenced in the centre of the intended foundation and be carried on to the right and the left, so as to press the bog-earth upwards on either side, continuing the process until the new material rested on a solid substratum, and all that portion of bog-earth which was not entirely removed was consolidated by the pressure. The embankment so formed being brought up above the water level, the foundation-pit might be excavated within the embankment or mound, and the foundations of the structure be laid with perfect security.

Hydraulic System of the Reservoir on the River Furens.—The town of Saint-Etienne is supplied with water to some extent by means of a subterranean passage or aqueduct which conveys the water directly from the springs at the source of the Furens. In the year 1858, for the purpose of protecting the town from inundations, the French Government undertook to construct an immense reservoir upon this river at a cost of about 1,570,000 francs, and it was agreed that the excess of the cost above 570,000 francs should be borne by the town on the condition that it should have a right to a portion of the reservoir to store up for its own use the surplus water of the river. Fig. 2233 shows the general arrangements adopted to secure the proper working of the reservoir under the complex conditions imposed on it.

2233.

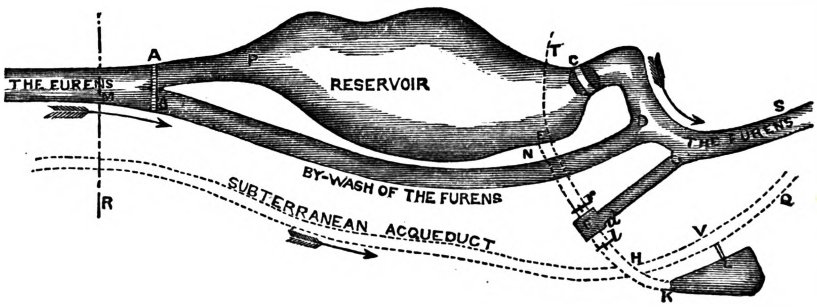

Previous to the construction of these works, the Furens followed the course M A P C D G S. A barrage 50 mètres in height bars the valley at the point C. Its section and elevation are shown by Figs. 2234, 2235. At B, Fig. 2233, a by-wash B N D has been constructed, and this now forms the bed of the Furens, the portion A P C D of the former bed being now covered by the reservoir. At A and B are two water-gates or sluices, one of which communicates with the reservoir by the old bed A P, and the other with the by-wash B N D which restores the water to the river at D.

Let us now see how the water in the reservoir is utilized, and first we must remark that the level at which the town of Saint-Etienne may retain its water is fixed at $44^{m} \cdot 50$ above the bottom in front of the great wall, as shown in Figs. 2234, 2235. Above this level there is a height of $5^{m} \cdot 50$, which is always to be kept empty to receive the surplus water in the case of a sudden rise of the river. As soon as the river has returned to its ordinary state, the surplus water is drawn off by a subterranean passage E′ N, Fig. 2235, into the by-wash or present bed of the Furens. We shall now see how the reservoir is adapted to supply both the town of Saint-Etienne and the factories in accordance with the conditions stated above.

A subterranean channel is cut in the counter-fort against which the great wall rests, in the direction of the line E F, Fig. 2233, and in this channel, stopped with masonry at the reservoir and, see Fig. 2235, there are two cast-iron pipes, each of $0^{m} \cdot 40$ in diameter, running through this masonry, which pipes convey the water to a bag F, by means of cocks *r* capable of opening to any degree. When the water has been brought into the bay F the double duty of supplying the town and the factories remains to be performed; to accomplish this, an open canal F *d* G, Fig. 2233, has been constructed with a regulator-sluice at *d* to convey the reserved water into the bed of the

Furens at G, and a second covered channel F *l* H K, provided at *l* with a regulator-sluice, conveys the water into the Saint-Etienne aqueduct, either directly at H by means of a cock, or through a small reservoir K L which communicates with the aqueduct by a pipe L V, provided at V with a regulator-cock. Fig. 2235 gives a sectional view of the arrangements of the channel which connects the bay F with the Saint-Etienne aqueduct.

During the summer the watering of the streets and the washing of the sewers is done by means of the resources of the reservoir, the water of the aqueduct being insufficient for this purpose. For this operation communication is established between the aqueduct and the reservoir by the canal F *l* H K, Figs. 2233 and 2235. If it is required during this season, when the factories on the Furens are obliged to cease work for considerable periods, to increase the discharge of the river, communication is opened with the reservoir by the canal F *d* G.

The aqueduct which conveys the water from the source of the Furens is everywhere quite independent of the reservoir, with which it communicates only by the channel F *l* H K. Fig. 2236 shows the relative positions of the aqueduct and the Furens near the point A at the mouth of the reservoir.

2234.

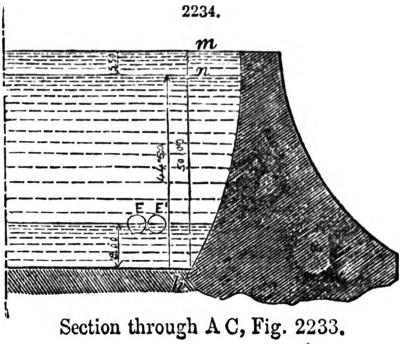

Section through A C, Fig. 2233.

2235.

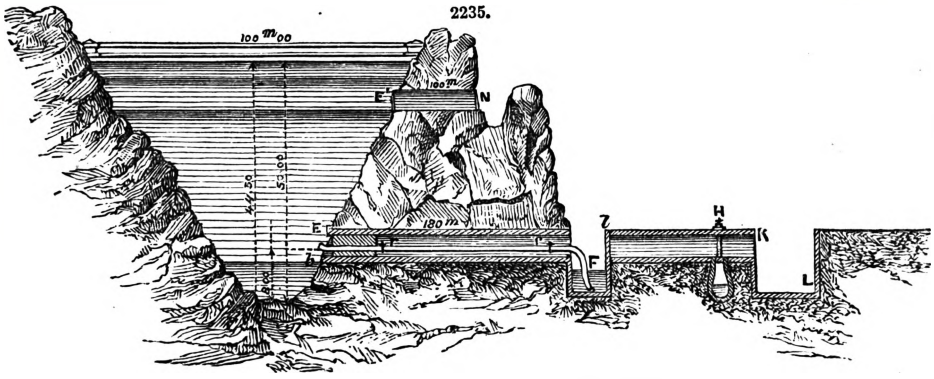

Section through line T E F N H K, Fig. 2233.

2236.

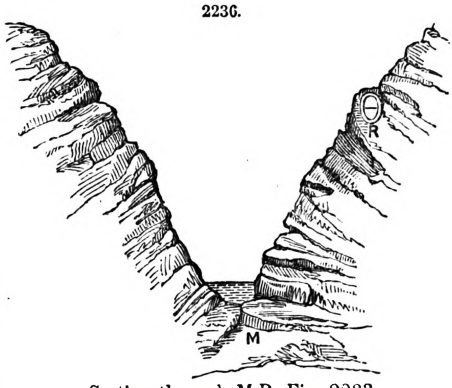

Section through M R, Fig. 2233.

Functions of the Water-gates above the Reservoir.— We have now to explain the working of the water-gates A and B placed at the head of the feed-canal of the reservoir A P, Fig. 2233, and the by-wash B N D. When the discharge of the river reaches the point M, where there is a scale showing the depth of the water, 93 cubic mètres a second, which discharge corresponds to a height of 2 mètres on the scale, the town of Saint-Etienne begins to be inundated. Let us suppose the rise to take place when the reservoir is full, that is to the permanent height of $44^{m}\cdot50$, the most unfavourable case. The gate A will be left shut and the gate B open so long as the water does not rise above this height of 2 mètres on the scale at the point M, the height corresponding to a discharge of 93 cubic mètres, and below which no injury is to be feared. In this case all the water will flow through the by-wash to join the river again at D. But as soon as the water rises on the scale M above 2 mètres, that is as soon as danger becomes imminent, the gate B remaining open, the gate A is opened and by its action the height of the water will be kept at 2 mètres on the scale M. This is easily accomplished, as the gate A is constructed to discharge the difference, 38 cubic mètres, between the maximum discharge, 131 cubic mètres, a second of the greatest known rise, and 93 cubic mètres. The excess of water will thus be received into the reservoir, and will accumulate in the space of $5^{m}\cdot50$ reserved above the line of the permanent level.

Let us now consider the working of these gates A and B in furnishing the permanent reserve, and to this end we will suppose the reservoir empty, which is the case at the close of the summer.

In the first place it is of course necessary to ensure the regular working of the factories under the conditions which existed before the construction of the reservoir, and for this we will suppose a discharge of 350 litres a second requisite. The depth of water corresponding to this discharge is marked on the scale M. So long as the level of the water in the bed of the river remains below his mark, the gate A must be left closed, as all the water will be needed by the factories situated below the reservoir. But as soon as the mark is submerged the gate A may be opened, so as to maintain the proper depth, and then all the excess of the discharge above 350 litres will pass into the reservoir by its feed-canal A P. If the flow of water that produced the rise ceases, the gate A

must be progressively closed, and entirely shut when the discharge of the river has sunk to 350 litres.

It will be seen from this that only that portion of the water which is not required by the factories is taken from the river. When the Furens discharges more than 350 litres a second, the useless surplus is stored up, to be used in the summer when the river, as always happens in dry summers, discharges only from 80 to 100 litres a second. The advantages accruing to the manufacturers from this arrangement will be at once perceived.

Discharge of the Furens.—Capacity of the Reservoir.—According to the daily measurements made during eight years by the engineers who constructed the barrage, in very dry years the quantity of water discharged by the Furens descends as low as 100 and even 80 litres a second; the mean quantity a second throughout the year being about 500 litres. The superficies of that portion of the bed of the river, situated above the reservoir, which furnishes this discharge, is about 2500 hectares, and the mean depth of water falling into it a year is 1 mètre.

The discharge during the greatest rises observed in the Furens between 1858 and 1868 did not exceed 15 cubic mètres a second; but on the 10th of July, 1849, a water-spout having burst in the upper part of the valley, an extraordinary rise took place, inundating the town of Saint-Etienne. This was the discharge which it was necessary to determine approximatively in order to fix the capacity of the reservoir; this the engineers to whom the work was entrusted were enabled to do from information obtained on the spot, the value which they found for this unusual rise being 131 cubic mètres. Fig. 2237 is the curve of the discharges of this exceptional rise of 1849. The capacity of the empty portion of the reservoir ought evidently to be equal to the area of the portion of the curve situated above the discharge of 93 cubic mètres, when the inundation of the town begins, which portion is detached in the figure. Now this area is equal to $\left(\frac{131 - 93}{2}\right) \times 3 \times 3600 = 205{,}200$ cubic mètres. The upper portion of the reservoir to be left empty for the purpose of receiving the surplus water in case of a rise should, therefore, be capable of containing, in round numbers, 200,000 cubic mètres.

2237.

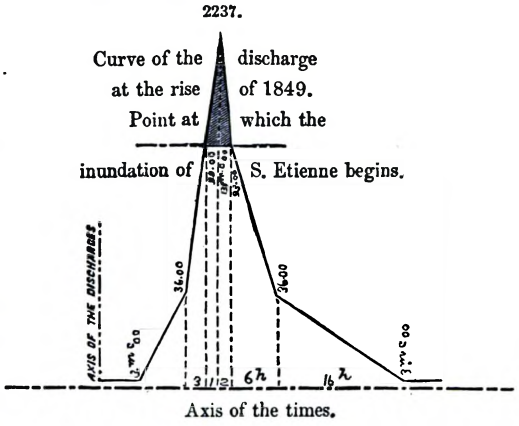

It was seen above that the portion in question was comprised between the horizontal planes situated at 50 mètres and at $44^{m} \cdot 50$ above the bottom of the reservoir, near the barrage, and, consequently, was $5^{m} \cdot 50$ in depth. From very exact calculations made since the completion of the works, it was found that the contents corresponding to the permanent level of $44^{m} \cdot 50$ were equal to 1,200,000 cubic mètres, and that the contents corresponding to the height of 50 mètres were equal to 1,600,000 cubic mètres. It follows from this that the capacity of the portion intended to receive the surplus water is 400,000 cubic mètres, or the double of that required to contain the destructive portion of the water-spout which burst upon the Furens in 1849. A rise like that of 1849 would give in the reserve portion a depth of only 3 mètres, corresponding to a cube of 200,000 cubic mètres, and to a height of $47^{m} \cdot 50$ above the bottom of the reservoir, whilst the depth of this portion is $5^{m} \cdot 50$, corresponding to a cube of 400,000 cubic mètres. Thus it will be seen that arrangements have been made so as to remove all danger from mistakes in calculation.

From measurements and calculations made during a period of eight years, and from the experience of the years 1865 and 1866 had of the reservoir itself, it has been ascertained that the permanent contents of 1,200,000 cubic mètres are renewed twice a year, in autumn and in spring. The quantity required for the supplementary service of the town of Saint-Etienne can in no case exceed 600,000 cubic mètres a year, so that there remain to be distributed among the factories 2,400,000 − 600,000 = 1,800,000 cubic mètres; or 120 litres a second for six months. Thus the advantages derived from the construction of this reservoir are very great. We have now to explain why a barrage 50 mètres in height, that is, the highest that has ever been constructed, was preferred to two reservoirs with barrages of moderate height.

In the valley in question two reservoirs would have required two barrages each 38 mètres in height, at a cost of 1,840,000 francs, to obtain the capacity of 1,600,000 cubic mètres, offered by the barrage of 50 mètres for a single reservoir at a cost of 1,600,000 francs. Thus by constructing only one reservoir a saving was effected of 240,000 francs.

In narrow valleys, the cost of retaining a given quantity of water increases with the number of reservoirs employed. This consequence, which we have drawn practically from the numerous comparative studies of reservoirs which we have made, may be arrived at also by theory.

Suppose the reservoir divided into horizontal portions, Fig. 2238, and let A and A′ be the lower and the upper sections of one of these portions, the height being K. The expression of the volume of this portion would be $W = a K + \frac{b K^2}{2} + \frac{c K^3}{3}$. The values of a, b, c, are, if S and S′, D and D′ represent the surfaces and the developments of the perimeters of the sections A and A′,

$$A = S \qquad b = \frac{2 D (S' - S)}{K (D + D')} \qquad c = \frac{(S' - S)(D' - D)}{K^2 (D + D')}.$$

When the talus is uniform as in this case, we may admit only one portion, and then K represents

the height of the contents in front of the barrage. Now we see that the expression of W, by substituting the values of a, b, c, becomes

$$W = \frac{D\,(2\,S' + S) + D'\,(2\,S + S')}{3\,(D + D')}\,K.$$

But here S and D, that is, the lower section of the reservoir and its perimeter, are very small with respect to S′ and D′, or the upper section, and we may write, neglecting S and D, $W = \frac{S'}{3}\,K$, which is nothing but the volume of a cone with a base S′, as might have been expected.

Hence we see with what rapidity the volume of the contents increases with the height, and what advantages may be derived from constructing very high barrages in narrow valleys.

There is in Spain, near Alicante, a barrage 41 mètres in height, the construction of which dates back as far as the sixteenth century. With the excellent hydraulic lime employed by the builders of the barrage of the Furens, there was, therefore, no danger to be apprehended from carrying it up to a height of 50 mètres.

2238.

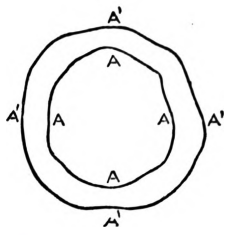

Division of a reservoir by sections—Plan.

Form and Mode of Construction adapted for Large Dams.—Plan of a Barrage or Dam 50 mètres in height.—We need not in this case consider earthen barrages which are of very doubtful security at a height of 20 mètres; at 50 mètres they would, of course, be quite out of the question. We have, therefore, to discuss only stone barrages, and the first question that presents itself is, Ought a barrage to be curvilineal or straight?

In France, previous to the construction of the Furens, the curved form had never been adopted; in Spain they are nearly all of this form. Theoretically it is admitted that they cannot act as an arch against the pressure of the water when they have the curved form, an opinion that is open to grave doubts if we take sufficiently into consideration the cohesion of good hydraulic mortar. But there is another and we think a sufficient reason for giving the preference to the curvilineal form. This reason is derived from the elasticity of blocks of masonry which in the present day is a proved fact. And if we admit this elasticity, it is obvious that the form which offers the greatest safety is the curved. This form was adopted for the barrage of the Furens, and is shown in Fig. 2239. The versed sine of the arc forming the axis of the crown is 5 mètres, and the chord 100 mètres.

2239.

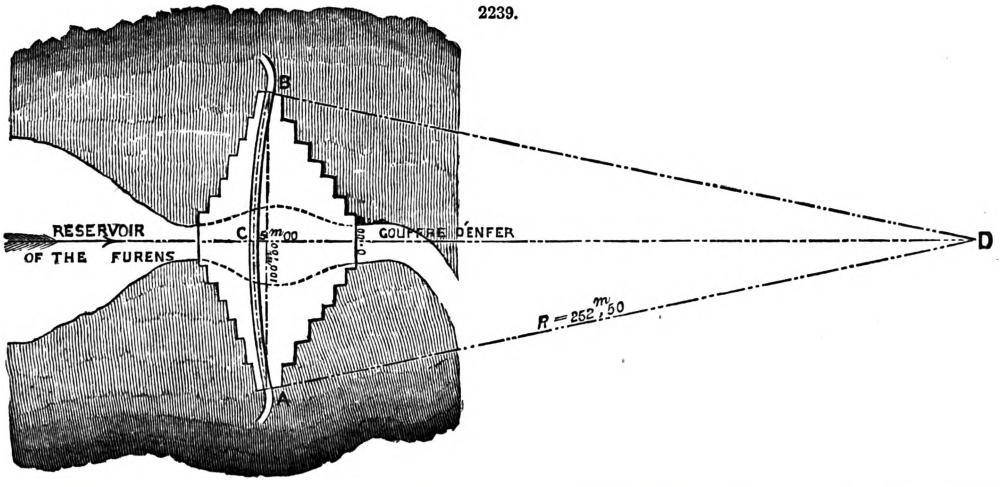

With respect to the profile to be adopted, M. de Sazilly had already (Annales, 1853) pointed out the only rational arrangements, but his profile was open to the objection of being constructed in a graduated form, which requires a larger cube of cut stone and, consequently, a greater cost. M. Delocre, in his pamphlet, which is far more complete than M. de Sazilly's, has determined the plans of a barrage 50 mètres in height in the two cases of very broad and very narrow valleys, and in the two hypotheses of continuous and graduated facings. Figs. 2240, 2241, represent the former case, and Figs. 2242, 2243, the latter.

2240.

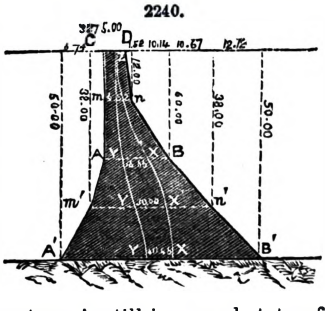

M. Delocre's profiles are nearly profiles of equal resistance giving a maximum pressure of 6 kilogrammes to the square centimètre, so that they are available for any height; thus to construct a barrage 26 mètres in height, it would be sufficient to adopt that portion which is situated below the horizontal line A B, Fig. 2240.

There are in France barrages in which the pressure greatly exceeds this limit of 6 kilogrammes to the square centimètre. At Almanza, in Spain, there is a barrage of which we shall have occasion to speak later, and in which this pressure is as great as 14 kilogrammes. This barrage, which dates from the sixteenth century, is still in a good state of preservation, which is explained by the fact that in calculating the theoretical type abstraction

was made of the cohesion of the mortar, and the weight of the mass only was considered. But the Theil lime, for instance, resists, after six months, a considerably greater pressure than 14 kilogrammes to the square centimètre; it is evident, therefore, that in the case of well-constructed masonry no danger is to be apprehended from subjecting it to this pressure.

We have calculated for a barrage of 50 mètres a profile for a pressure of 14 kilogrammes to the square centimètre, adopting, like M. Delocre, 2000 kilogrammes as the weight of a cubic mètre of the masonry; this profile is shown in Fig. 2244. It gives as the thickness of the base $31^{m} \cdot 02$, whilst the profile calculated for 6 kilogrammes, Fig. 2240, gives $49^{m} \cdot 46$. We see at once what enormous saving, in this case 264 cubic mètres of masonry to the lineal mètre, would be effected if the nature of the materials employed warranted a pressure of 14 kilogrammes to the square centimètre, Vicet cement, for instance. For a pressure between 6 and 14 kilogrammes we shall have a type combining the facings of the two types, Figs. 2240 and 2244, by making them coincide at their summits, which are both 5 mètres broad. Fig. 2240 gives, in our opinion, the highest and Fig. 2244 the lowest limit of boldness; it will be for the builder to vary between them in accordance with the nature of the materials at his disposal. For the barrage of the Furens, which was to be of greater height than any existing structure, the engineers wisely chose as their model the less bold kind. Emboldened by the success of their undertaking, they have proposed for the barrage which they are about to construct on the Ban for the town of Saint-Chamond an intermediate type, in which the limit of the pressure provided against was 8 kilogrammes to the square centimètre. This type, of which we shall speak later, has been approved by the Administration, as well as the plan of the reservoir for the town of Saint-Chamond.

2241.

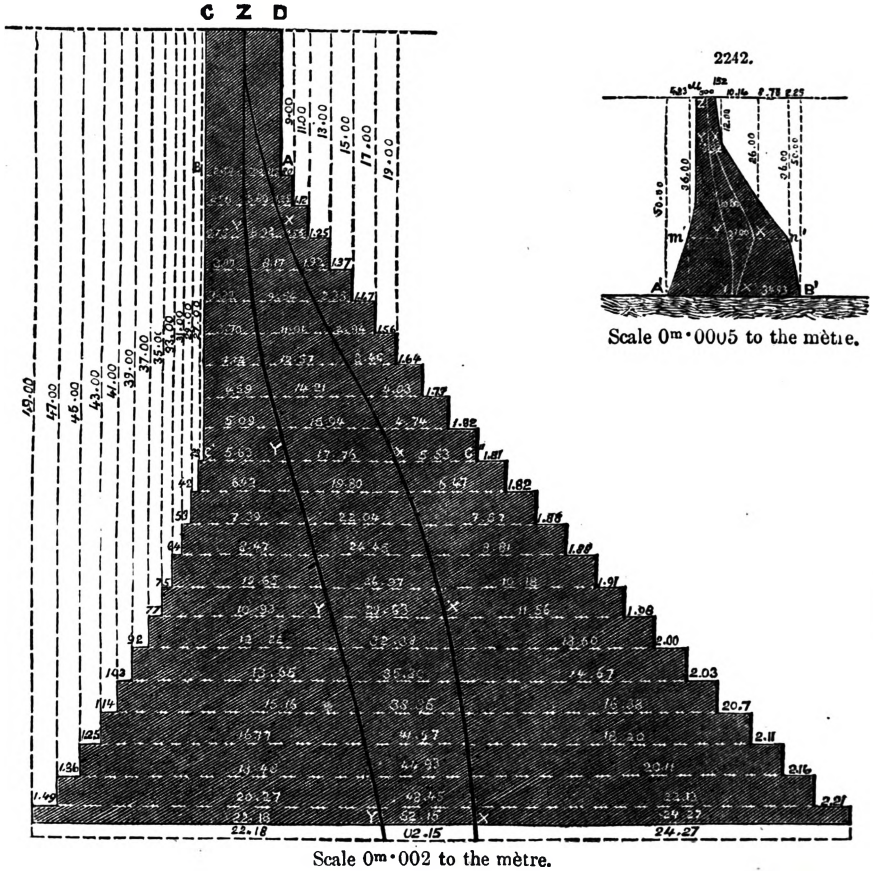

Scale $0^{m} \cdot 002$ to the mètre.

2242.

Scale $0^{m} \cdot 0005$ to the mètre.

The type given in Fig. 2240 presents polygonal facings, and if we consider besides that the form of the barrage is circular, it will be seen that these angles must have a bad effect upon the open facings. On this account, curved facings were substituted in the barrage of the Furens, the profile of which is given in Fig. 2245. Comparing this with Fig. 2240, it will be noticed that the thickness has been considerably increased at the top and slightly diminished at the bottom; this was to provide against the action of ice and floods. This barrage is situated 800 mètres above the level of the sea, and in severe winters the ice is $0^{m} \cdot 50$ thick. In the event of a rapid thaw, the ice breaks up into large masses, and these masses are liable to be driven against the masonry by the violent gales which are very frequent in that part of the country. It was on this account that, in the barrage of the Furens, the breadths of $6^{m} \cdot 52$ and $16^{m} \cdot 66$, corresponding to the heights of 12 mètres and 26 mètres in the theoretical type, Fig. 2240, were increased to $9^{m} \cdot 56$ and $18^{m} \cdot 01$ respectively. The action of the ice and waves is most to be feared at the permanent level of $44^{m} \cdot 50$, for above this level the surplus water of a sudden rise is retained only a few hours. By increasing

the thickness at this level, it became necessary, in order to have continuous and graceful curves on the facings, to increase also the thickness of the summit at the height of 50 mètres from 5 to 5^{m}·70. Above this level there is a guard-wall to prevent the waves from leaping over, and to serve as a means of communication from one side of the valley to the other.

In calculating for the type of the barrage of the Furens, the pressures in the case of a valley of indefinite breadth, we see that in no point of the profile does the pressure exceed 6^{k}·50 to the square centimètre; but it must be remarked that here we are in a narrow valley, and that the thickness of the barrage begins to be equal to the breadth of the valley at 32 mètres downwards from the general summit. At this level the type of the Furens is 23^{m}·49 in breadth, and the theoretical type, Fig. 2242, 23^{m}·40. The profile to be adopted should, therefore, from this line be in accordance with the profile of Fig. 2242, and thus in the one executed the portion of the masonry *a c b* and *d e h*, Fig. 2245, is excess. Hence it follows that downwards from the line in question the pressures must be considerably less than those marked on Fig. 2245, which were calculated as for a valley of indefinite breadth. If, therefore, the pressure reaches 6 kilogrammes at the lower portion of the barrage, it will certainly not exceed this limit, and hence we see that this barrage has been constructed with a considerable excess of resistance, which must in part be attributed to the timidity of the engineers, who had to face for the first time the enormous height of 50 mètres.

2243.

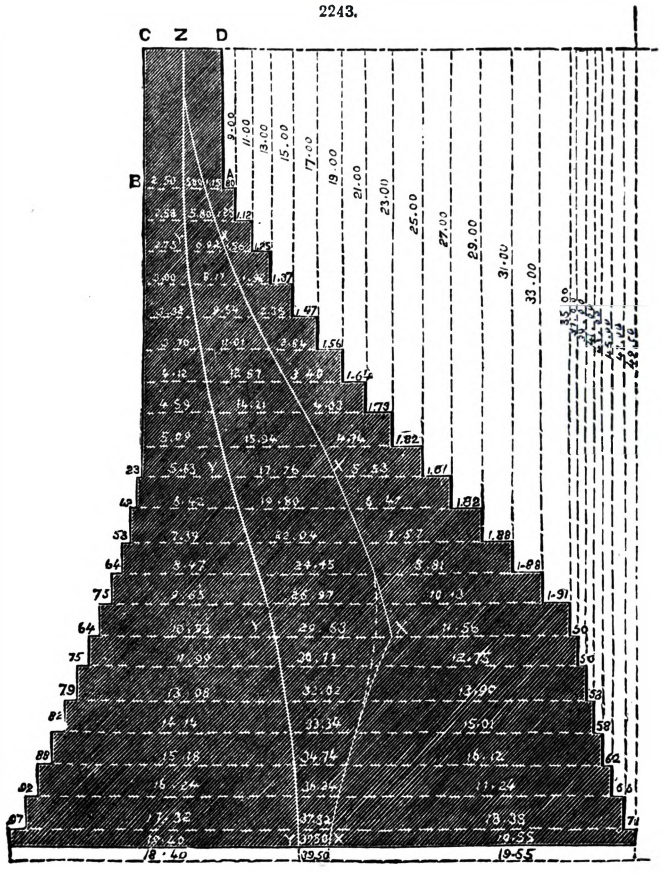

Scale 0^{m}·002 to the mètre.

2244.

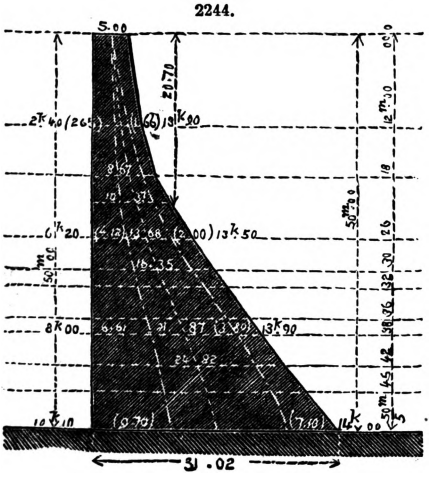

2245.

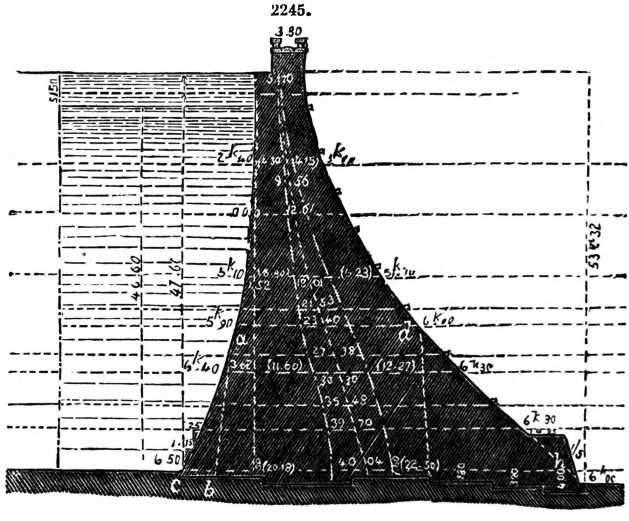

We come now to consider the surfaces of the facings; the following is the way in which they are generated;—Suppose the profile of Fig. 2245 placed in the vertical plane passing through the axis C D, Fig. 2239, in such a way that the middle point of the top, 5^{m}·70 thick, Fig. 2245, shall fall upon the arc of the circle A C B, Fig. 2239, and the whole profile to move successively in

vertical planes cutting each other in the direction of the vertical axis passing through the centre D, Fig. 2239, of the circle, the middle point above mentioned remaining during this movement upon the axis A C B of the circle. The stream-ward and opposite lines of the profile will trace the stream-ward and opposite facings of the barrage, which will be surfaces very graceful to the eye. To enable scaffolding to be placed against the facings when the joints in the masonry need repairing, cut stones, jutting out $0^m \cdot 30$, have been placed in quincunx order in the outside facing $4^m \cdot 60$ apart. These projecting stones have also a good effect in breaking the monotony of such an extensive facing. In the facing on the side of the reservoir where these projections were impracticable on account of the action of the waves, rings have been placed in the same order, through which ropes may be passed to fix the scaffolding; these rings serve also to tie the boats to which are used on the reservoir.

Mode of Construction.—The soil upon which the barrage of the Furens is built is mica schist. The barrage is sunk into the rock at its foundations and its sides. For the foundations, all the loose or doubtful blocks were carefully removed until the solid bed of rock was reached which joins the two slopes against which the structure is fixed, and which, as shown in Fig. 2245, is at the base let into this compact bed. For the sides, the earth and rock loosened by contact with the atmosphere where removed until, as before, the solid rock was reached, into which the masonry is inserted in the same way as for the foundations. The structure may be said to be held in a vice, which renders any slipping impossible, and the only movement to which it is liable is the vertical sinking of the masonry.

We think that for works of this nature this founding upon the solid rock both at the base and at the sides is a condition *sine quâ non*, and if it is not to be obtained, the work ought not to be undertaken. M. Aymard has given, in his interesting work on Irrigation in Spain, the history of the barrage of Puentès; this barrage, 50 mètres in height, gave way in 1802 at the base, the builder having conceived the unfortunate notion of founding it upon piles in an alluvial soil, instead of going down at any cost to the solid rock.

All the masonry of the barrage of the Furens is composed of common stone, the finest being reserved for the facings, the joints in which are irregular, being built without regular courses like the mass of the masonry. In our opinion, in structures which have to bear a great pressure of water, care should be taken not to lay the stones in horizontal courses, and bonders should be placed in all directions. Indeed, the upper surface of the work during construction should look like a field studded with projecting stones; in a word, the masonry should be so executed as to form a monolith. It was to avoid breaking the continuity of the mass that the lateral tunnels were adopted of which we have already spoken. Any opening in a barrage of so great a height as that of the Furens would be a source of danger.

One essential condition in the construction of such works is not to employ materials of too different a character. Masonry consisting of cut stone and stones of regular shape sinks less than the rough mass used for the inner filling. We continually see in canal locks the cut-stone facings become detached after a certain number of years; and when the water can penetrate between the two kinds of masonry the facings fall with the first frost. In walls not subject to the action of water, the same phenomenon occurs: only it is less marked, and the facing of a wall may stand many years though partly detached from the mass. In a wall of the height of that of the Furens and subject to the action of water, this displacement would have been certain and inevitable. On this account, one of the principal conditions of building this barrage was that "only materials of a similar nature should be employed and the interior should not be filled up with concrete." This latter device would have separated the wall into two parts by the certain disruption of the concrete and the masonry due to the different degree of sinking or settling down, as it is called, and neither of these two parts would have possessed the thickness necessary to resist the pressure.

All the masonry of the barrage, including the foundations and the facings, is thus of rough common stone. It is almost useless to add that this masonry requires the greatest perfection of workmanship, and that this cannot be had except under the immediate and continual superintendence of the engineer. In some parts, where the removal of the rocks caused the surfaces to be too regular, in order to give a firmer hold to the masonry the following method was adopted. On the surface of the rock, previously roughened, a layer of Vassy cement was spread, into which building stones were stuck. In a few hours these stones were very solidly joined to the rock by the hardening of the cement, and by this means an excellent hold was provided for the masonry.

It was at first decided to use Vassy cement for the joints of the facing on the side of the reservoir, to render it more water-tight; but this was discontinued after a height of about 15 mètres had been reached, the successive introductions of water as the work progressed proving that the ordinary mortar held quite as well.

The only portions of the barrage in cut stone are the angle of the upper retreat, the plinths, the parapets, and the corbels upon the outside facing.

The masonry was subjected to the action of the water as the work advanced. The work of one season was left to settle down and harden till the next season, when it was submerged. It was not till the end of the season of 1865 that the work could be tested by a great depth of water. At the beginning of December in that year, the Furens was greatly swollen, and the reservoir was filled up to the height of 46 mètres. In March, 1866, this height was increased to 47 mètres, that is up to the level of the part completed in the season of 1865. These tests produced no movement in the mass nor any escape at the sides. The only phenomenon that occurred was traces of dampness upon the open facing without any apparent local leakage. This fact is explained by the inevitable sinking of such a mass, and by the porous nature of the mortar and the stone itself, which becomes visible only when they are subjected to enormous pressures. A small ditch was dug at the foot of the barrage to show the amount of leakage; but though $46^m \cdot 60$ of water was retained in the reservoir for four months, it remained quite dry.

In short, the results of this great undertaking have been in all respects satisfactory. The success is rendered more conspicuous by the fact that important leakages at the sides, where the masonry is joined to the rock, seemed inevitable; the absence of this leakage must be attributed to the care and foresight with which the work was executed. We have also to call attention to an excellent means of preventing these lateral leakages employed at the reservoir of the Furens. This consists in hermetically closing with cement in the immediate neighbourhood of the barrage all the fissures in the rocks and in cementing as thickly as possible the joint in the angle formed by the facing of the barrage with that of the rocks on each side. The cement is made to cover from 8 to 10 centimètres of the rocks and the masonry. This method was practised by the Romans on the inner angles of their aqueducts, as shown in Fig. 2246.

2246.

Roman Conduits.

2247.

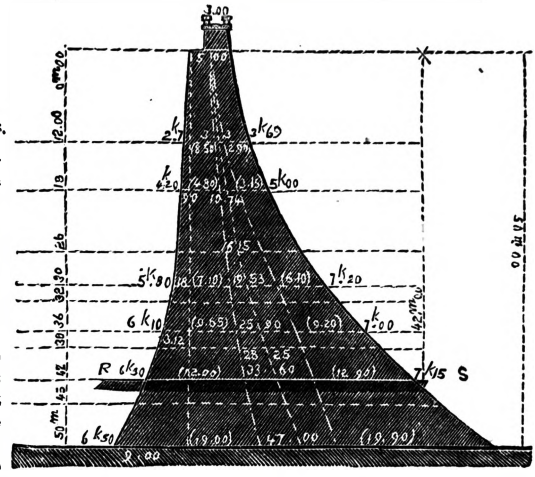

Comparison of various kinds of Stone Dams.—We have already stated that a barrage was to be constructed on the Ban, a tributary of the Gier, for the service of the town of Saint-Chaumond and the factories on the Gier. The profile of this barrage, which has been calculated by M. Mongolfier, is given in Fig. 2247; this barrage will be 42 mètres in height, that is eight less than that of the Furens.

Comparing the portion of the profile above the line R S, situated at 42 mètres below the top, with the corresponding part of the profile of the Furens, Fig. 2245, we see that the thickness has been considerably reduced; and if we increase the profile to the height of 50 mètres and calculate the pressures, we see by the figures given in Fig. 2247 that in no point will the pressure exceed 8 kilogrammes to the square centimètre, a limit that may be adopted with the excellent Theil lime. This profile, which has been approved by the "Administration," is bolder than that of the Furens, and offers a saving of 105 cubic mètres of masonry a lineal mètre.

The curves of the pressures, when empty and when full, shown in Figs. 2240, 2244, 2245, 2247, enable us to see that these curves leave the middle curve between them, and that they approach it in proportion as the pressure to the square centimètre becomes less. This is shown clearly by the following Table;—

Profiles.	Distances	
	From the curve of the Pressures to the outside facing when full.	From the curve of the Pressures to the inside facing when empty.
Fig. 2240; 6 kilogrammes to the square centimètre	22·76	20·67
Fig. 2245; $6^{k}\cdot30$ to the square centimètre	22·50	20·18
Fig. 2247; $7^{k}\cdot30$ to the square centimètre	12·90	19·00
Fig. 2244, 14 kilogrammes to the square centimètre	7·10	9·10

It will be seen that for the same general type the more the limit of pressure is increased the nearer the curves approach the lines of the facings and, consequently, recede from the middle line. The conditions of stability, therefore, necessarily diminish in proportion as the limit of pressure to be adopted is increased. It will be for the builder to consider well the nature of his materials and the circumstances of the place before fixing this limit, and then to choose one of the profiles which we have been examining.

Let us now compare some existing types of barrages with those which we considered in connection with the barrage of the Furens. Figs. 2248 to 2253 represent some Spanish barrages from designs which M. Aymard has given of these structures in his work on Irrigation in Spain.

The first thing that strikes the attention is the colossal proportions of these structures, with the exception of the barrage of Almanza, Fig. 2251, which is the oldest. This barrage is of unusual boldness, at least in its upper portion, which throughout a height of $8^{m}\cdot20$ has a mean thickness of only $3^{m}\cdot50$. Five of these barrages, those of Puentès, Val de Infierno, Nijar, Almanza, and Alicante, are of the graduated type represented by Figs. 2241 and 2243, and one only, that of Elche, Fig. 2252, is of the type with continuous facings, the theoretical form of which is given in Figs. 2240 and 2242.

Calculating in these theoretical types the cubes of masonry corresponding to the heights of the several barrages, and taking into account the pressures at the outer edge when loaded, which pressures we have calculated for each of these barrages, we obtain the following comparative Table;—

Height of the Barrages.	Name of Barrage.	Maximum Pressure to the square centimètre.	Cubes of Masonry to the lineal mètre of Barrage. According to the type executed.	According to the theoretical type of Figs. 2241 and 2243.	According to the theoretical type of Figs. 2240 and 2242.	Differences.	Observations.
mètres.		kilos.	cub. mèt.	cub. mèt.	cub. mèt.	cub. mèt.	
50·00	Barrages of Puentès ..	7·90	1519	1029	..	490	Graduated facings.
35·70	Barrages of Val de Infierno	6·50	1084	391	..	693	,,
27·50	Barrage of Nijar	7·50	499	308	..	191	,,
20·70	Barrage of Almanza ..	14·00	139	141	..	−2	,,
23·20	Barrage of Elche	12·70	213	..	187	56	Continuous facings.
41·00	Barrage of Alicante ..	11·30	1100	566	..	534	Graduated facings.

We see that these great pressures might have been reduced, by adopting the rational type, to the lower limit of 6 kilogrammes to the square centimètre, with a large gain in the masonry in all except the barrage of Almanza; and in this case with the same cube within 2 mètres, we might, by a better arrangement, have reduced the pressure from 14 to 6 kilogrammes.

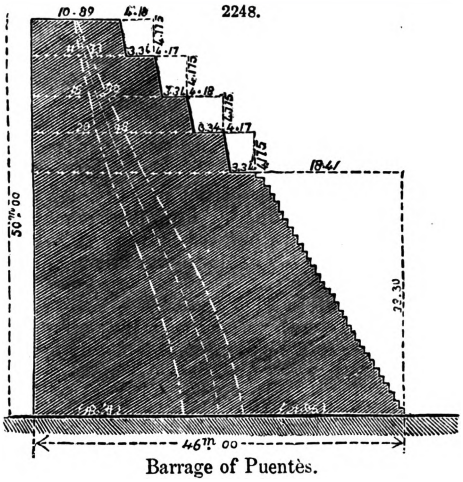

Barrage of Puentès.

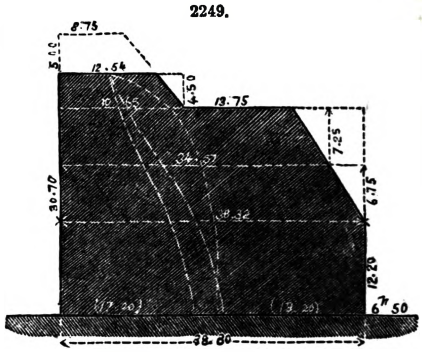

Barrage of Val de Infierno.

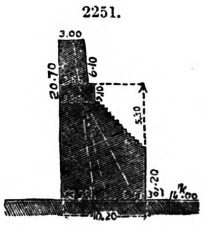

Barrage of Almanza.

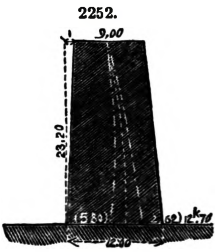

Barrage of Elche.

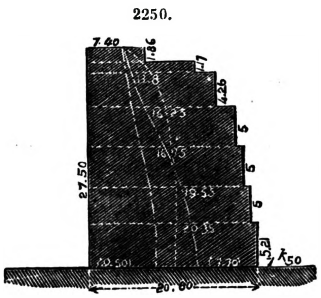

Barrage of Nijar.

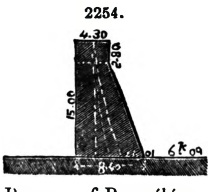

Barrage of Bosméléac.

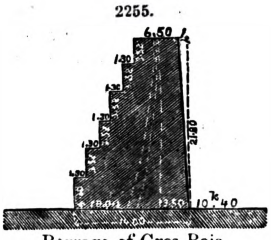

Barrage of Gros-Bois.

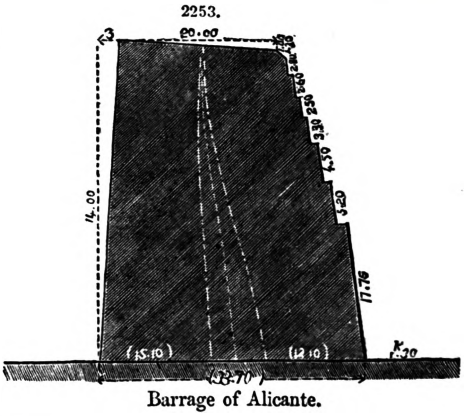

Barrage of Alicante.

Figs. 2254, 2255, represent the barrages of Bosméléac and Gros-Bois. The former of these two profiles is similar to the type of Figs. 2240 and 2242, and the latter to that of Figs. 2241 and 2243.

The profile of the barrage of Bosméléac gives a cube of 90 cubic mètres to the lineal mètre, and a pressure of $6^{k}\cdot09$; the profile of Figs. 2240 and 2242 would give for the height of 15 mètres, which is the height of this barrage, a maximum pressure of 6 kilogrammes and a cube of 91 cubic mètres. The barrage of Bosméléac is thus well designed. As to the barrage of Gros-Bois, its profile is the most irrational of all, and it is the only one in which the two curves of the pressures leave the middle one on the same side, the curve of the pressures when loaded passing within 3 mètres of the lower outside edge. Besides this it gives, with a pressure of $10^{k}\cdot40$, an excess of masonry equal to 226 − 156, or 70 cubic mètres above the type, Figs. 2241 and 2243, applied to its height of $21^{m}\cdot80$.

It is obvious that if the profile of this barrage were turned the other way, with the retreats or gradations on the outside instead of on the water-side, it would have deviated from the theoretical type only by an excess of resistance.

The faulty arrangement of the profile of this barrage must, in our opinion, have tended considerably to cause the giving way of the masonry which has occurred, and which has necessitated the erection of counterforts.

Our readers will perceive, from what we have said on the subject of barrages, the importance of selecting a good profile, and we hope that we have practically demonstrated by the experiment of the barrage of the Furens, the superiority of the form of profile arrived at theoretically by M. Delocre.

The Form of the Profile to be adopted for Large Stone Dams.—We have already had occasion to refer to the treatise of M. Delocre on the form of stone dams; in the following pages we will reproduce the methods of calculation by which he arrived at his decisions.

Type of Rectilineal Barrage or Dam in Valleys of considerable Breadth.—Condition of Stability.—A barrage which does not transmit laterally to the sides of the valley the pressures which it supports, must resist these pressures in all its points by its own weight. We may, therefore, in seeking the conditions of stability of a structure of this nature, consider a single section only equal in length to a lineal unit. If the materials employed were of indefinite resisting power, as well as the soil of the foundation, and if there were between them an unlimited degree of adhesion, the only condition of stability to be fulfilled would be to give to the wall such a profile that the resultant of the thrust of the water and of the weight of the structure should pass within the polygon of the base. But this condition is not sufficient in practice; the materials and the soil of the foundations will, in fact, support only a limited pressure depending upon their nature, and they have not between them an unlimited degree of adhesion. Hence the two following indispensable conditions:—1. In no point of the structure may the materials employed, or the soil of the foundations, be required to bear too great a pressure; 2. The several courses of masonry in the wall must be incapable of slipping one over another, and the wall must be incapable of sliding upon its base.

Hitherto none of the walls that have given way have done so by slipping; these accidents have occurred in all cases from the first condition not having been fulfilled. We shall, therefore, in the study on which we are about to enter, determine first the dimensions of a barrage with respect to this condition, and then ascertain if the second is satisfied.

A B C D, Fig. 2256, being the profile of a barrage, any section of this barrage equal in length to a lineal unit may be considered as subject to the action of two forces; the vertical component P

2256.

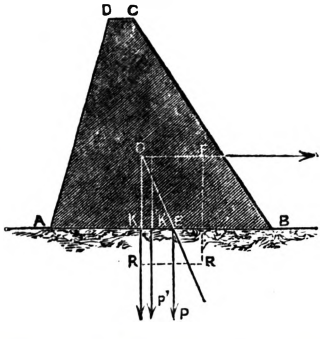

2257.

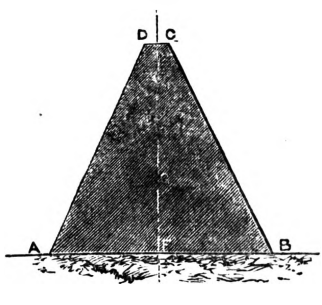

of the resultant of the weight of the structure and of the thrust against the facing D A, and the horizontal component F of the thrust. These two forces produce a resultant R which cuts the base A B in the point E. The force R may be considered as applied to the point E and resolved into two at this point, the vertical force being equal to the force P and the horizontal equal to the component F. The horizontal force tends to cause the wall to slide upon its foundations; this effect we will consider later. The vertical force spreads itself over the base from the extremity B, which is nearest the point of application of the resultant, according to a decreasing law.

Denoting the breadth of the base A B by l, and the distance B E by u, the pressure p' at the point B will be given by one of the following formulæ;

$$p' = 2\left(2 - \frac{3u}{l}\right)\frac{P}{l}, \qquad [1] \qquad\qquad p' = \frac{2}{3}\,\frac{P}{u}, \qquad [2]$$

according as u is greater or less than $\frac{1}{3}\,l$.

These formulæ follow naturally from those given by O. Byrne in his 'Essential Elements of Practical Mechanics,' page 236;

$$p = \frac{N}{\Omega}(1 + 3n) \qquad [\alpha] \qquad\qquad p = \frac{N}{\Omega} \times \frac{4}{3(1-n)} \qquad [\beta]$$

and which apply to a homogeneous rectangle pressed by a force acting upon one of the symmetrical axes.

In these formulæ N represents the whole load, Ω the whole area of the surface, and n a quantity which, with our notation, is equal to $\frac{l-2u}{l}$. We have represented the load N by P and the surface Ω is replaced by l.

Making in the above formulæ $N = P$, $\Omega = l$, $n = \frac{l-2u}{l}$, and substituting p' for p, they become

$$p' = \frac{P}{l}\left(1 + \frac{3l-6u}{l}\right) = 2\left(2 - \frac{3u}{l}\right)\frac{P}{l}; \qquad p' = \frac{P}{\frac{2}{3}} \times \frac{4}{3\left(1 - \frac{l'-2u}{l}\right)} = \frac{2}{3}\frac{P}{u}.$$

The formula [α] is applicable when $n < \frac{1}{3}$, and consequently formula [1] is adapted to the case in which $\frac{l-2u}{l} < \frac{1}{3}$, that is, $u > \frac{1}{3}l$.

The formula [β] is applicable when $n < \frac{1}{3}$, and consequently the formula [2] is adapted to the case in which $\frac{l-2u}{l} > \frac{1}{3}$, that is, $u < \frac{1}{3}l$.

The stability of the wall requires that this pressure at the point B be equal to or less than the limit of pressure R' which each superficial unit may be made to bear. We ought, therefore, to have, according as u is greater or less than $\frac{1}{3}l$,

$$2\left(2 - \frac{3u}{l}\right)\frac{P}{l} \leqq R', \quad [3] \qquad \frac{2}{3}\frac{P}{u} \leqq R', \quad [4]$$

and this condition should be fulfilled for each horizontal section made in the profile, neglecting the force of cohesion in the mortar, which is unfavourable to resistance.

The expressions [1] and [2] may be put under another form by introducing into the calculation the maximum height λ that may be given to a wall with vertical sides, so that the pressure upon the base shall not exceed the limit R'. Indeed, representing the density of the masonry or the weight of the cubic mètre by δ', we have $R' = \delta'\lambda$.

And the expressions [2] and [3] become

$$2\left(2 - \frac{3u}{l}\right)\frac{P}{\delta' l} \leqq \lambda, \quad [5] \qquad \frac{2}{3}\frac{P}{\delta' u} \leqq \lambda. \quad [6]$$

The preceding conditions would be sufficient if the reservoir were to be always full of water, but the wall must be capable, when the reservoir is empty, of supporting its own weight without being subject in any of its points to a pressure, by unit of surface, exceeding the limit $\delta'\lambda$. In this case the resultant of all the forces acting upon the wall is reduced to the weight P'; and, denoting the distance K' A from the vertical passing through the centre of gravity of the figure A B C D, Fig. 2256, to the nearest extremity A of the base by u, the pressure at A will be given according to the case by the formulæ [1] and [2], and the stability of the wall will require that one of the relations [5] and [6] be satisfied when P' is substituted for P.

Form to be given to a Wall having its own weight only to support.—To examine the subject from every point of view, it is important to know what form should be given to a wall having only its own weight to support, so that no point of the masonry may be subject to a pressure above the limit adopted.

It is clear that so long as the height of this wall is less than the limit λ, it will be sufficient to give it vertical facings, and that the pressure to the unit of surface in the lower part will not exceed $\delta'\lambda$. If the wall is to be higher, vertical facings may be adopted throughout a distance from the top equal to λ, and from this point the thickness of the structure must be increased to prevent the pressure upon any horizontal section from exceeding the limit $\delta'\lambda$.

The form to be given to the facings to satisfy this condition is easily determined. We might choose arbitrarily one of the facings of the wall and determine the other; but if we wish to obtain the minimum cube of masonry, we shall give the wall a symmetrical form with respect to its axis. It is clear from the formulæ [1] and [2] that the maximum pressure p' cannot acquire a value less than $\frac{P}{l}$; u being by hypothesis greater than $\frac{l}{2}$, or at least equal to $\frac{l}{2}$, and that this minimum value is reached for $u = \frac{l}{2}$.

This being allowed, the curve sought, D N Y, Fig. 2258, must satisfy the condition, that if in any section M N the pressure to the unit of surface is equal to a given quantity, this pressure will remain the same for a section M' N', infinitely near. This condition will evidently be satisfied if the increase of the surface of the base is proportional to the increase of the pressure, or, as all is symmetrical with respect to the axis O S, if the increase of the half-surface L N is proportional to the increase of the pressure upon this half-surface.

This condition is expressed by the equation $dP = K\,dB$, P representing the pressure exerted upon the half-section L N by the upper part of the structure, and B the surface of this section. Representing by b the dimension of the wall in the direction perpendicular to the section under

consideration, by x the breadth L N, or the abscissa of the curve sought, D N Y, and by y the distance from the section M N to a horizontal line taken as the axis of x, we have

$$dB = d\,b\,x, \qquad dP = \delta' b\,x\,dy.$$

The differential equation of the curve D N Y is therefore $\delta' b\,x\,dy = K\,b\,dx$, $dy = \dfrac{K}{\delta'}\dfrac{dx}{x}$.

The constant K expresses the limit of pressure to the unit of surface, and, consequently, it is equal to $\delta'\lambda$; the equation thus becomes $dy = \lambda\dfrac{dx}{x}$, or, integrating,

$$y - y_0 = \lambda \log.\left(\frac{x}{x_0}\right); \qquad [7]$$

thus the curve D N Y is logarithmic.

If we make $x_0 = \lambda$, the two equations above give $\dfrac{dy_0}{dx_0} = 1$, and $y_0 = 0$.

So that the origin of the co-ordinates should be taken at the point where the value of x is equal to λ, and in this point the tangent to the curve makes an angle of 45° with the axis of the x's.

Substituting their values for x_0 and y_0, equation [7] becomes

$$y = \lambda \log.\frac{x}{\lambda}, \qquad [8]$$

or, passing from hyperbolic to common logarithms, $y = 2{\cdot}302658509\,\lambda \log.\dfrac{x}{\lambda}$.

The complete curve, which has as an asymptote the axis of the y's, would give the form of the facings of a wall indefinite in height, for which the pressure to the unit of surface would be equal to the limit K upon any horizontal section.

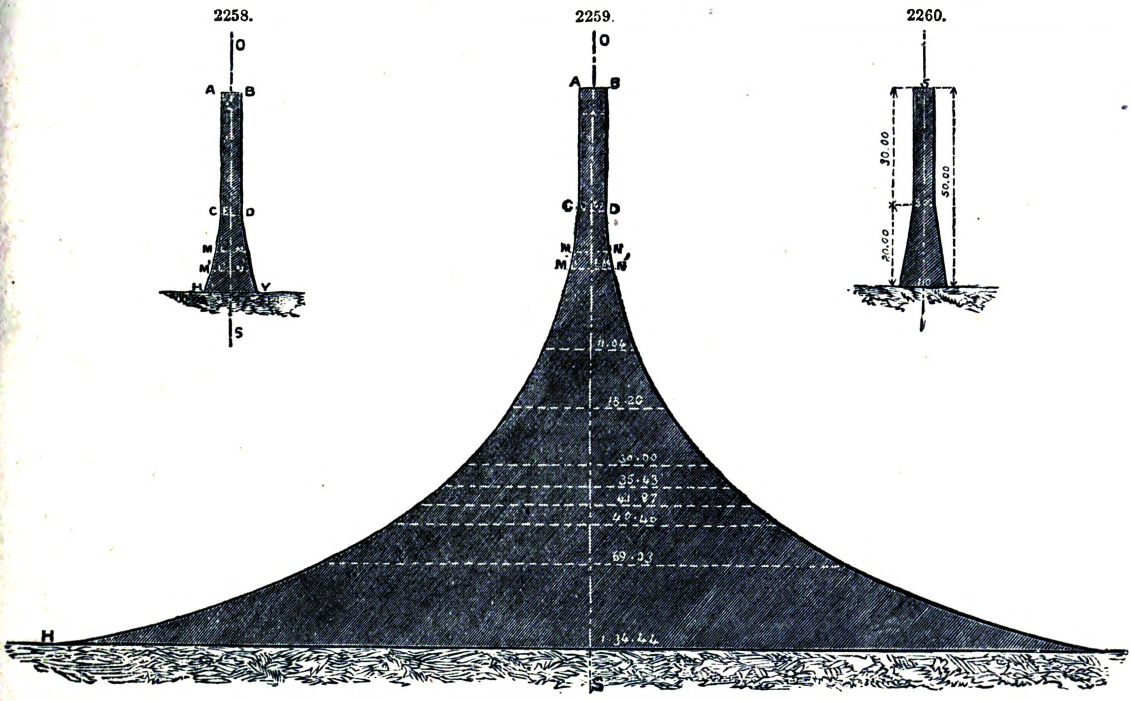

Fig. 2259 shows the curve constructed, admitting the limit of pressure adopted for the masonry to be 60,000 kilogrammes to the square mètre, or 6 kilogrammes to the square centimètre; and, supposing it be required to give a breadth of 5 mètres to the top part of the wall, we have

$$K = 60{,}000;$$

and admitting the density of the masonry to be double that of water, say $\delta' = 2000$, we have $\lambda = 30$; the equation of the curve becomes $y = 2{\cdot}3026 \times 30 \log.\dfrac{x}{30}$.

It must not be forgotten, in making use of this formula, that the direction in which the y's are usually reckoned has been reversed; in other words, the increment dy has been reckoned with the sign + downwards. The values of y negative must therefore be taken in the direction L O.

It will be seen from Fig. 2258 that if a wall 50 mètres in height and 5 mètres in breadth at the top has a breadth of $9^m{\cdot}7392$ at the base, in no point will it have to support a pressure above the limit of 6 kilogrammes to the square centimètre.

Substituting right lines for the arcs C M H, D N Y, the breadth to be given to the wall at its base would be 10 mètres. Fig. 2260 is constructed on this hypothesis.

The equation giving the breadth x of the base is immediately found,

$$\left[30 \times 5 + 20\left(\frac{5+x}{2}\right)\right]\frac{2000}{x} = 2000 \times 30$$

The influence of the concave profile which we have given to the wall may be clearly seen by finding the thickness to be given to the base in the case of rectilineal facings inclined from the summit.

This thickness, putting H for the height of the wall, and a for the breadth at the top, will be given by the equation, Fig. 2261, $H\left(\frac{a+x}{2}\right)\frac{\delta'}{x} = \delta'\lambda$, whence $x = \frac{Ha}{2\lambda - H}$

It will be seen that for $H = 2\lambda$, x will become infinite, and that for any value of H greater than 2λ, λ will be negative. Whence we infer that the maximum height that may be given to a wall constructed with rectilineal sides inclined equally from the top, without exceeding the limit of resistance in the masonry, is twice that of a wall with vertical sides.

Admitting 6 kilogrammes to the square centimètre as the limit of pressure, the limit of the height to be given to the wall is 60 mètres; this limit is reduced to 40 mètres, if we take 4 kilogrammes to the square centimètre as the limit of resistance in the materials.

Making H = 50 mètres, and $a = 5$ mètres, as in Fig. 2260, we find $x = 25$ mètres. The breadth of the wall at the base is therefore 25 mètres, instead of $9^m \cdot 739$.

The preceding results show of what importance it may be not to have any point in a structure at which the pressure is much less than that taken as the limit; by uselessly admitting excesses of thickness at certain points, it soon happens that we are unable to maintain the pressures within the required limits at other points. In the following considerations we shall endeavour to find a profile of equal resistance, or at least one that shall deviate but little from such a profile.

Stability of a Wall having to support a Load of Water.—Theoretical Profile of Equal Resistance.— We saw, Fig. 2256, that if A B C D represent a wall having to support a pressure of water, the conditions of stability in this wall are given by one of the relations

$$2\left(2 - \frac{3u}{l}\right)\frac{P}{\delta' l} \begin{matrix} = \\ < \end{matrix} \lambda, \qquad [5] \qquad\qquad \frac{2}{3}\frac{P}{\delta' u} \begin{matrix} = \\ < \end{matrix} \lambda, \qquad [6]$$

according as we have $u > \frac{1}{3}l$, or $u < \frac{1}{3}l$.

Keeping to the limiting values which correspond to the sign =, we shall have for the equations giving the conditions of stability

$$2\left(2 - \frac{3u}{l}\right)\frac{P}{\delta' l} = \lambda, \qquad [9] \qquad\qquad \frac{2}{3}\frac{P}{u\,\delta'} = \lambda. \qquad [10]$$

Substituting in the formulæ [9] and [10] for the quantities u, l, and P, their respective values as a function of the height of the wall, of its reduced thickness, and of the inclination of its sides, we see—

1. That the profile offering the least thickness, while satisfying the conditions of stability, is that, the face of which is vertical on the side of the water and inclined on the opposite side.

2. That when the height is increased, the reduced thickness increases less rapidly, so that a profile constructed with a vertical facing on the side of the water, and with a talus on the opposite side, combined so as to satisfy the limiting condition of stability for its base, will offer an excess of stability over the surplus height. A wall satisfying the limiting conditions throughout its height will therefore present, with a vertical face on the side of the water, a concave curve on the opposite side.

2261.

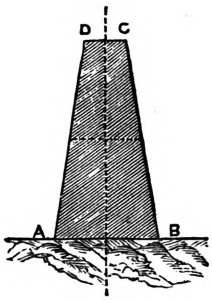

2262.

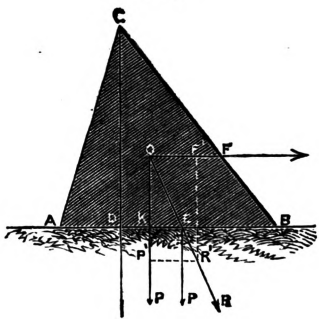

2263.

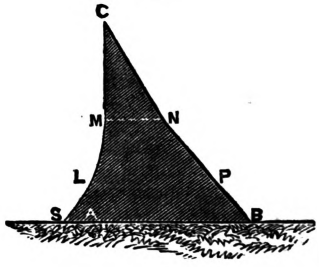

Let us suppose for a moment this curve constructed, and let A C N B, Fig. 2262, be the profile determined by the condition that for each horizontal section M N, the pressure is equal to the limit R′ which it is required not to exceed.

This profile would have sufficient resistance if the reservoir were always full, but we have to take care that the pressure arising from the weight of the wall do not exceed the limit R′ when the reservoir is empty. It is certain that this pressure will not be exceeded for the face C N B; indeed, the developments into which we have already entered show that the effect of the thrust is to drive towards this side the vertical component equal to the weight of the wall: it remains, therefore, to be seen if the limit R′ is reached in any point of the face C M A. If we refer to the calculations which we have already made with respect to the stability of walls having only their own weight to

support, we shall see that this limit will be passed at a very small height. It will be necessary, from the point M where the limit R′ is reached, to carry out the wall according to a curve M L S; from the section M N the two curves N P B, M L S, should be determined by the condition that for any horizontal section L P, the pressure at the point P when the reservoir is full should be equal to R′, and, when the reservoir is empty, equal to the same limit at the point L.

2264.

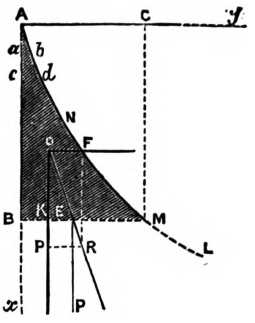

To solve the question completely, it only remains now to determine exactly the two curves C N B, M L S.

Let us take as the axis of the x's, Fig. 2264, the vertical face A B of the wall, and for the axis of the y's, the perpendicular A y to this face passing through the summit, and let M be any point in the curve.

If B M $= y$ and M $= x$, the problem to be solved is to find a relation between x and y which shall be the equation of the curve.

We shall continue to consider a section of the wall of a unit of length in the direction perpendicular to the figure. This wall is acted upon by two forces; its weight P and the thrust F. These two forces are represented by the following expressions; $P = \delta' \int_0^y y\,dx$, $F = \frac{\delta x^2}{2}$.

The curve A N L should be determined by the condition that the pressure in M to the unit of surface is to be equal to the limit $\lambda\,\delta'$, which must not be exceeded. This condition is expressed according to the cases by one of the equations [9] and [10].

We have $l = y$, and it remains to determine in functions of x and y, the quantity u = E M. Now E M — K M — K E. The two similar triangles O K E, O P R give

$$\frac{K\,E}{P\,R} = \frac{O\,K}{O\,P}, \text{ or } \frac{K\,E}{F} = \frac{x}{3\,P}.$$

Whence, substituting for F and P their values, and for brevity making $\frac{\delta}{\delta'} = \theta$, we deduce

$$K\,E = \frac{\theta\,x^3}{6\int_0^y y\,dx}.$$

Again we have K M $= y -$ B K.

B K is the distance from the centre of gravity of the area A B M N to the axis A x; this distance is obtained by considering that the moment of the total area with respect to this axis is equal to the sum of the moments of the elementary areas such as $a\,b\,c\,d$.

$$B\,K\int_0^y y\,dx = \int_0^y \frac{y^2\,dx}{2} = \frac{1}{2}\int_0^y y^2\,dx. \quad \text{Whence } B\,K = \frac{\int_0^y y^2\,dx}{2\int_0^y y\,dx};$$

consequently, $K\,M = y - B\,K = \frac{2\,y\int_0^y y^2\,dx - \int_0^y y^2\,dx}{2\int_0^y y\,dx}$, and $u = \frac{6\,y\int_0^y y\,dx - 3\int_0^y y^2\,dx - \theta\,x^3}{6\int_0^y y\,dx}$.

This value of u substituted in equation [9] gives

$$3\int_0^y y^2\,dx - 2\,y\int_0^y y\,dx - \lambda\,y^2 + \theta\,x^3 = 0. \qquad [11]$$

The same value of u substituted in equation [10] would give

$$4\left(\int_0^y y\,x\right)^2 - 6\,\lambda\,y\int_0^y y\,dx + 3\,\lambda\int_0^y y^2\,dx + \lambda\,\theta\,x^3 = 0. \qquad [12]$$

We have endeavoured to integrate the formulæ [11] and [12] by an exact method, but without success; we have been able to obtain y developed only as a series in function of x; the series belonging to equation [11] is of the form, $y = a\,x^{\frac{3}{2}} + b\,x^{\frac{5}{2}} + c\,x^{\frac{7}{2}} + d\,x^{\frac{9}{2}} +$ etc.

The series belonging to equation [12] is of the form $y = a\,x + b\,x^2 + c\,x^3 + d\,x^4 + e\,x^5 +$ etc.

We had calculated the coefficients of the first terms admitting for θ and λ the values $\theta = \frac{1}{2}$, $\lambda = 30$; but it seems to us useless to reproduce these calculations here; the above formulæ are, indeed, of no use in determining a practical profile; they are applicable only to the portion C N of the inner curve of Fig. 2263, and the calculations into which we should be led in determining the two curves N P B, M L S, of the lower portion of the profile are quite impracticable even if we have recourse to approximative methods.

2265.

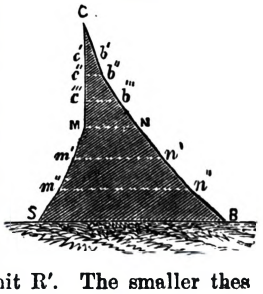

Conditions which Profiles of Barrages must satisfy in practice.—We shall avoid the difficulties of integration, and solve, in a manner sufficiently accurate for practice, the problem of finding a profile of equal resistance by replacing the curves C N B, M L S, of Fig. 2263 by the polygonal circumferences C b' b'' N n' n'' B, M m' m'' S, of Fig. 2265 calculated for the condition that for each horizontal section such as n' m' passing through the corresponding summits of the polygons forming the profile of the face, the pressures to the unit of surface in n' and m' according as the reservoir is full or empty, are to be equal to the limit R′. The smaller the horizontal sections such as c' b', c'' b'', the less will the circumferences differ from the curves corresponding to an exact solution. This solution offers no difficulty, as we shall see later.

But before proceeding farther we must remark that if the profile of Fig. 2263, supposed to be calculated in an exact manner, were sufficient theoretically to resist the load of water which it would be required to support, a thickness that became nul at the summit could not be admitted in practice. The masonry in the upper portion of the wall must be capable of resisting the action of waves, and if it have sufficient dimensions to serve as a passage for vehicles, or, at least, foot-passengers, something will be gained in point of convenience.

These considerations lead us to substitute Fig. 2266 for Fig. 2263, having in its upper portion a part C D B A with vertical sides. In this part the masonry will be subject to pressures less than the limit R′. The method of calculating this profile would be analogous to that employed for Fig. 2265; but the breadth C D at the top of the barrage being determined, we must begin by calculating the height A D for the condition that the pressure to the unit of surface at the point A when the barrage is full shall be equal to the limit R′.

The height is readily calculated by the following method;—Let C D = a, Fig. 2267, the breadth chosen for the top of the barrage, and D A = x the height to be calculated.

When the reservoir is full, the upper portion C D B A of the barrage is subject to two forces, its weight P and the thrust F; these two forces produce a resultant R cutting the base B A in the point E; the resultant is decomposed into two at this point, a horizontal force tending to make the part C D B A slide upon the plane B A, and a vertical force equal to P; this latter force spreads itself over the base A B according to a law which we have already alluded to.

By expressing the pressure at the point A as equal to the limit $R' = \lambda \delta'$ which is not to be exceeded, we shall put the problem into an equation; this will lead us to one of the equations [9] and [10] found by solving a similar question.

$$2\left(2 - \frac{3u}{l}\right)\frac{P}{\delta' l} = \lambda, \qquad [9] \qquad \frac{2}{3}\frac{P}{u\delta'} = \lambda. \qquad [10]$$

We have now to express in these equations the quantity u = A E as functions of the lengths a and x. Now we have $AE = KA - EK = \frac{a}{2} - EK$, and again $KE = \frac{OK \times PR}{OP} = \frac{x \times F}{3P}$.

But $P = a x \delta'$, and $F = \frac{x^2 \delta}{2}$. Therefore $KE = \frac{x^2 \delta}{6 a \delta'}$. And consequently,

$$u = \frac{a}{2} - \frac{x^2 \delta}{6 a \delta'} = \frac{1}{6a}(3a^2 - \theta x^2). \qquad [13]$$

Substituting this value in the equations [9] and [10], we deduce as the equations connecting the quantities a and x, remarking that $l = a$;

$$\theta x^3 + a^2 x - a^2 \lambda = 0. \quad [14] \qquad \theta \lambda x^2 + 4a^2 x - 3\lambda a^2 = 0. \quad [15]$$

We must employ equation [14] or equation [15] according as a is greater or less than $\frac{a}{3}$, or, which is the same thing (as may be seen by referring to the value of u given above), according as x^2 is greater or less than $\frac{a^2}{\theta}$.

Having determined the upper portion of the profile in this way, the other two portions A N T, B M S, Fig. 2266, may be calculated by the method indicated for Fig. 2263.

2266.

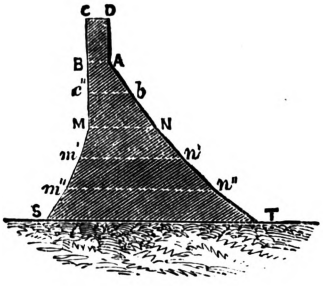

2267.

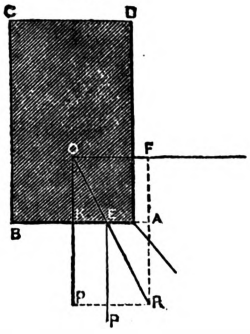

2268.

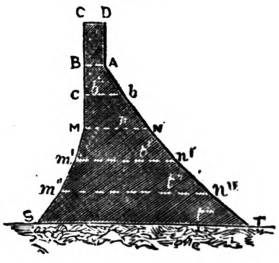

The difficulties of integration will be avoided by substituting polygonal lines for the curves A N T, B M S, as shown in Fig. 2268, and the smaller the horizontal sections into which the barrage is supposed to be divided, such as $m'n$, $m''n''$, the nearer will the profile approximate to one of equal resistance.

The calculation of this profile offers no difficulty; it is, however, of great length. We will give later the formulæ arrived at.

To determine a practical Profile.—The important matter in constructing a barrage is not to allow in any point of the structure a pressure greater than the limit R′, but it is obviously not indispensable that this pressure should be reached in every point, and plain that profiles may be admitted which deviate slightly from one of equal resistance if they offer other advantages.

We see at a glance that the execution of facings such as those of Fig. 2268 would offer some difficulty, and that the frequent change of inclination which they present would not produce a very happy effect. A more practical form will be obtained by lessening the number of sections into which the wall is supposed to be divided.

This consideration leads us to calculate a profile of the form of Fig. 2269.

The method of calculation will be the same whatever the height of the horizontal sections may be, and it will apply with slight modifications to the determining of the profile of equal resistance by the approximative method.

The profile of Fig. 2269, like that of Fig. 2265, divides itself naturally into two parts, one C D A B, in which the face on the side of the water is vertical, the other A B, A′ B′, the facings of which are inclined on both sides. One of the horizontal planes dividing the profile into sections must be made to pass through the point B from which the inside face is inclined; the first thing to be calculated is, therefore, the height C B. We will suppose in the first place that the outside facing slopes regularly from D to A, as in Fig. 2270; the problem will be expressed as an equation by making the pressure to the unit of surface at the point A when the reservoir is full, and at the point B when the reservoir is empty, equal to the limit R′.

2269.

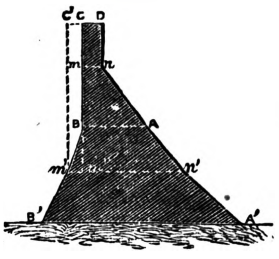

2270.

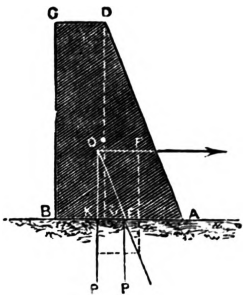

Denoting the weight of the portion C D B A of the wall by P, the thrust by F, and the distance A E by u, the equation expressing the above conditions will be one of the following;

$$2\left(2-\frac{3u}{l}\right)\frac{P}{\delta' l}=\lambda, \qquad [9] \qquad\qquad \frac{2}{3}\frac{P}{u\delta'}=\lambda, \qquad [10]$$

according as u is greater or less than $\frac{l}{3}$.

Let C D $= a$, C B $= z$, and A V $= x$. We shall have first,

$$P=\left(\frac{2a+x}{2}\right)\delta' z, \quad F=\frac{z^2\delta}{2}, \quad l=a+x, \quad u=AE=KA-KE.$$

Now we have

$$KE=OK\times\frac{F}{P}=\frac{z^2\delta}{3(2a+x)\delta'}=\frac{z^2\theta}{3(2a+x)}.$$

We shall obtain K A by considering that the moment of the whole weight of the figure C B A D, with respect to the point A, is equal to the sum of the moments of the two parts B C D V, D V A, of which it is composed.

$$KA\times\frac{(2a+x)z\delta'}{2}=\frac{(2x+a)az\delta'}{2}+\frac{zx^2\delta'}{3}.$$

Whence we deduce, $KA=\frac{2x(x+3a)+3a^2}{3(2a+x)}$, and, consequently, $u=\frac{2x(x+3a)-\theta z^2+3a^2}{3(2a+x)}$.

This value of u substituted successively in the equations [9] and [10] gives us the two following;

$$\theta z^3-\lambda x^2-2a\lambda x+a^2 z-\lambda a^2=0. \qquad [16]$$

$$x^2 z-2\lambda x^2+4axz+\theta\lambda z^2-6a\lambda x+4a^2 z-3a^2\lambda=0. \qquad [17]$$

Equations [16] or [17] will be employed according as u is greater or less than $\frac{l}{3}$.

Hitherto we have only one equation between the unknowns x and z, but we may obtain a second by expressing the pressure to the unit of surface at the point B when the reservoir is empty as equal to the limit R′. This condition will always be given by the relations [9] and [10], but the quantity u will not remain the same; the thrust of the water no longer existing, the vertical force P acts in the direction O P, and we have $u =$ B K.

This quantity is immediately deduced from the preceding calculations; we have

$$u=BK=AB-AK=\frac{x(x+3a)+3a^2}{3(2a+x)}.$$

Substituting the preceding value in the expressions [9] and [10], we obtain the two equations

$$x^2 z-\lambda x^2+3axz-2a\lambda x+a^2 z-\lambda a^2=0, \qquad [18]$$

$$x^2 z-\lambda x^2+4axz-3a\lambda x+4a^2 z-3a^2\lambda=0. \qquad [19]$$

The values of x and z may be determined in each particular case by combining one of the equations [16] and [17] with one of the equations [18] and [19]. This operation must be effected by tentative experiments, for the value of u being a function of the unknowns, we cannot ascertain in a precise manner *a priori* which equation is required. It will be necessary, in this case, to have recourse to an hypothesis on the relation of the value of u to that of $\frac{r}{3}$. Having solved the two equations chosen in accordance with this hypothesis, we must verify the supposition, and if it be untrue we shall be driven to take those of the equations which suit the values found for u and z, which, though inexact, will be near enough to enable us to choose the equations that will determine the true values.

The equations [16], [17], [18], and [19] being of the third degree, by combining two of them, we shall be led to the solution of an equation of the sixth degree. This solution will offer no difficulty in practice, the equations to be dealt with being numerical. Supposing, for example, the two values of u, A E and B K to be less than $\frac{B A}{3} = \frac{l}{3}$, the equations [17] and [19] must be combined. Equation [19] being of the first degree in z, we may deduce from it the value of this unknown as a function of x; and substituting it in equation [17] we shall obtain the following final equation

$$x^6 + 11\,a\,x^5 + (48\,a^2 - \lambda^2\theta)\,x^4 + 2\,a\,(52\,a^2 - 3\,\theta\,\lambda^2)\,x^3 + a^2(112\,a^2 - 15\,\theta\,\lambda^2)\,x^2 + 6\,a^3\,(8\,a^2 - 3\,\theta\,\lambda^2)\,x - 9\,a^4\,\lambda^2\,\theta = 0. \quad [20]$$

The values of x and z being found, the portion C D B A of the barrage, constructed by means of these values, possesses this property, namely, the pressures to the unit of surface in the points A and B according as the reservoir is full or empty are equal to the limit R′, and we are at the same time certain, as was shown in our considerations on the profile of equal resistance, that the pressure in any point a of the face D A is less than the limit R′.

2271.

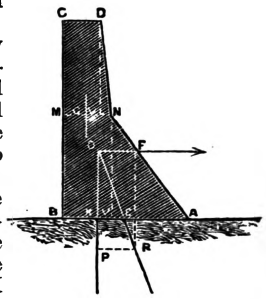

It will be very easy to ascertain what pressure is borne by any point of the face D A; if it happen that in certain points the difference between this pressure and the limit R′ is considerable, a marked advantage will be gained by subdividing the height C D into two and calculating a profile of the form of Fig. 2271. This calculation may be effected in the manner we have already pointed out, and will offer no difficulty whatever.

In this case, for the upper portion C D M N of the profile, the height C M is given; the only unknown is V′ N = x, and as the pressure in M when the reservoir is empty is necessarily less than R′, we have only one equation for determining x; this is evidently one of the equations [16] and [17], in which the value h chosen as the height C M will be substituted for the unknown z.

The value of x will therefore be given by one of the following equations;

$$\lambda\,x^2 + 2\,a\,\lambda\,x + \lambda\,a^2 - \theta\,h^3 - a^2\,h = 0, \quad [21]$$

$$(2\,\lambda - h)\,x^3 + 2\,a\,(3\,\lambda - 2\,h)\,x + 3\,a^2\,\lambda - 4\,a^2\,h - \theta\,\lambda\,h^2 = 0. \quad [22]$$

The portion M N B A of the profile may be determined by employing a method analogous to that followed in calculating the profile of Fig. 2270, taking as unknown the height M B = z and N A = x.

The equations of the problem will always be the relations [9] and [10], in which the quantities P, l, and u, will be expressed as functions of the data of the question.

Representing by s the surface of the upper portion M C D N of the profile, by β the distance N G from the vertical passing through the centre of gravity of this portion to the point N, and by b the length M N, we shall have

$$P = s\,\delta' + b\,z\,\delta' + \frac{z\,x\,\delta'}{2} = \left(\frac{2\,s + 2\,b\,z + z\,x}{2}\right)\delta' \quad F = \frac{(h+z)^2\,\delta}{2}, \quad l = b + x, \quad u = A\,E = x + V\,K - K\,E.$$

K E will be given immediately by the relation

$$K\,E = O\,K \times \frac{F}{P} = \frac{(h+z)^3\,\delta}{3\,(2\,s + 2\,b\,z + z\,x)\,\delta'} = \frac{(h+z)^3\,\theta}{3\,(2\,s + 2\,b\,z + z\,x)}.$$

V K may be found by considering the moment of the resultant P of the vertical forces with respect to the point N as equal to the sum of the moments of the components with respect to the same point.

$$P \times V\,K = \beta\,s\,\delta' + b\,z\,\delta' \times \frac{b}{2} - \frac{z\,x\,\delta'}{2} \times \frac{x}{3},$$

whence we deduce, substituting the value of P, $V\,K = \frac{6\,\beta\,s + 3\,b^2\,z - z\,x^2}{3\,(2\,s + 2\,b\,z + z\,x)}$. And, consequently, the equation $u = x + V\,K - K\,E$ gives $u = \frac{3\,x\,(2\,s + 2\,b\,z + z\,x) + 6\,\beta\,s + 3\,b^2\,z - z\,x^2 - (h+z)^3\,\theta}{3\,(2\,s + 2\,b\,z + z\,x)}$.

Substituting the values of P, l, and u, in the relations [9] and [10], we obtain the following equations;

$$\theta\,z^3 - \lambda\,x^2 + 3\,h\,\theta\,z^2 - 2\,(s + \lambda\,b)\,x + (b^2 + 3\,h^2\,\theta)\,z + 4\,b\,s - 6\,\beta\,s + \theta\,h^3 - \lambda\,b^2 = 0, \quad [23]$$

$$z^2\,x^2 - 2\,\lambda\,z\,x^2 + 4\,b\,z^2\,x + \theta\,\lambda\,z^3 + 2\,(2\,s - 3\,\lambda\,b)\,z\,x + (4\,b^2 + 3\,h\,\theta\,\lambda)\,z^2 - 6\,\lambda\,s\,x + (8\,b\,s + 3\,h^2\,\theta\,\lambda - 3\,\lambda\,b^2)\,z + 4\,s^2 - 6\,\lambda\,\beta\,s + \theta\,\lambda\,h^3 = 0. \quad [24]$$

The first or the second of these equations will be employed according as u is greater or less than $\frac{b+x}{3}$.

A second equation between x and z may be obtained by expressing the pressure to the unit of surface at the point B as equal to the limit R′ when the reservoir is empty. The relations [9] and [10] will still be the equations of the problem.

The value of u will thus be equal to B K, and this quantity may be obtained as a function of

the data of the question by expressing the moment of the whole weight P with respect to the point B as equal to the sum of the moments of the components of this weight.

$$\mathrm{BK} \times \mathrm{P} = \delta' s (b - \beta) + b z \delta' \times \frac{b}{2} + \frac{x z \delta'}{2}\left(b + \frac{x}{3}\right).$$

Whence we deduce, substituting the value of P and, for the sake of brevity, putting $b - \beta = a$,

$$u = \frac{6 a s + 3 b^2 z + 3 b z x + z x^2}{3 (2 s + 2 b z + z x)}.$$

Substituting this expression, as well as the values of P and l in the relations [9] and [10], we obtain the equations

$$z x^2 - \lambda x^2 + 3 b z x + 2 (2 s - \lambda b) x + b^2 z + 4 s b - 6 a s - \lambda b^2 = 0, \qquad [25]$$

$$z^2 x^2 - \lambda z x^2 + 4 b z^2 x + (4 s - 3 \lambda b) z x + 4 b^2 z^2 + (8 b s - 3 \lambda b^2) z + 4 s^2 - 6 \lambda a s = 0. \qquad [26]$$

Recourse will be had to equation [25] or equation [26], according as x is greater or less than $\frac{b + x}{3}$.

The values of x and z may be obtained by combining one of the equations [23] and [24] with one of the equations [25] and [26].

The calculations to be worked out are long, but they offer no serious difficulty. Elimination is accomplished in a very simple way, for in whatever manner the equations are combined, there will be always one at least of the second degree with respect to one of the unknowns.

2272.

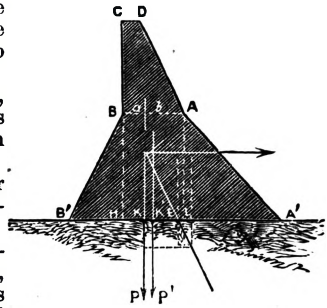

The upper portion C D B A, in which the inner face is vertical, being determined by the preceding considerations, the dimensions to be adopted for the lower portion A B, A′ B′, Fig. 2269, in which the wall has a talus upon both sides, remain to be ascertained.

We will suppose this portion of the wall divided into a number of sections, and make A B, A′ B′, Fig. 2272, the section, the dimensions of which are to be determined.

The height of this section is chosen beforehand; we will represent it by h, and take as unknowns the distances $\mathrm{A'L} = x$, $\mathrm{B'H} = y$. The unknowns may be determined, as in the questions we have been considering, by expressing the pressures in A′ and B′, according as the reservoir is full or empty, as equal to the limit R′. The equations of the problem will still be the relations [9] and [10].

$$2\left(2 - \frac{3u}{l}\right)\frac{\mathrm{P}}{\delta' l} = \lambda, \qquad [9] \qquad\qquad \frac{2}{3}\frac{\mathrm{P}}{u\,\delta'} = \lambda, \qquad [10]$$

in which the weight P and the quantities $l = \mathrm{A'B'}$, $u = \mathrm{AE}$, have to be replaced by their values as functions of the data of the question.

The calculations will be effected in the way already pointed out. We have first

$$\mathrm{P} = s\delta' + b h' \delta + \frac{h' x \delta'}{2} + \frac{h' y \delta'}{2} + \left(\frac{2h + h'}{2}\right) y \delta = \frac{(s + b h')\delta' + h'(x + y)\delta' + (2h + h') y \delta}{2},$$

$$\mathrm{F} = \left(\frac{h + h'}{2}\right)^2 \delta,$$

$$l = b + x + y,$$

$$u = \mathrm{A'E} = x + \mathrm{LK} - \mathrm{KE},$$

$$\mathrm{KE} = \mathrm{OK} \times \frac{\mathrm{F}}{\mathrm{P}} = \frac{(h + h')^3 \delta}{3 [2 (s + b h') + h' (x + y) \delta' + (2h + h') y \delta]}$$

$$= \frac{(h + h')^3 \theta}{3 [2 (s + b h') + h' (x + y) + (2h + h') y \theta]}.$$

The value of LK may be obtained by expressing the moment, with respect to the point A, of the whole weight P, which includes that of the water weighing upon the inclined portion B B′ of the inner side, as equal to the sum of the moments of the components of this force.

$$\mathrm{KL} = \frac{12 s \beta \delta' + 6 b^2 h' \delta' + 2 h' y \delta' (y + 3b) + 3 (2h + h') (y + 2b) y \delta - 2 h' \delta' x^2}{6 [2 (s + b h') \delta' + h' (x + y) \delta' + (2h + h') y \delta]}$$

$$= \frac{12 s \beta + 6 b^2 h' + 2 h' y (y + 3b) + 3 (2h + h') (y + 2b) y \theta - 2 h' x^2}{6 [2 (s + b h') + h' (x + y) + (2h + h') y \theta]}.$$

We deduce immediately from these expressions the value of u.

$$u = \frac{6x [2 (s + b h') + h' (x + y) + (2h + h') y \theta] + 12 s \beta + 6 b^2 h' + 2 h' y (y + 3b) + 3 (2h + h') (y + 2b) y \theta - 2 h' x^2 - 2 \theta (h + h')^3}{6 [2 (s + b h') + h' (x + y) + (2h + h') y \theta]}.$$

This value must be substituted in equation [9] or equation [10], according as u is greater or less than $\frac{l}{3}$.

We thus obtain one of the two following equations [28] and [29], writing for the sake of brevity;

$$\begin{cases} s + b h = \sigma, \\ s\beta + \dfrac{b^2 h'}{2} = \mu, \\ h + h' = \mathrm{H}, \\ 2h + h' = \mathrm{H}', \end{cases} \qquad [27]$$

$$\left.\begin{array}{|l|l|l|l|l|} 2\lambda & y^2 + 4\lambda & xy + y + 2\lambda & x^2 + 4b\lambda & y + 4b\lambda \\ - \mathrm{H}'\theta & + 2\mathrm{H}'\theta & & + 2b\mathrm{H}'\theta & - 4bh' \\ - 2h' & - 2h' & & + 2bh' & + 4\sigma \\ & & & - 8\sigma & \end{array}\right. \quad \left.\begin{array}{|l} x + 2b^2\lambda \\ - 8b\sigma \\ - 2\mathrm{H}^2\theta \\ + 12\mu \end{array}\right\} = 0. \quad [28]$$

$$\left.\begin{array}{|l|l|l|l|l|} 2h'\lambda & y^2 + 6h'\lambda & xy + 4h'\lambda & x^2 + 6bh'\lambda & y + 12\lambda\sigma \\ + 3\mathrm{H}'\lambda\theta & + 6\mathrm{H}'\lambda\theta & - 2h'^2 & + 6b\mathrm{H}'\lambda\theta & - 8h'\sigma \\ - 2\mathrm{H}'^2\theta^2 & - 4\mathrm{H}'h'\theta & & - 8\mathrm{H}'\theta\sigma & \\ - 4\mathrm{H}'h'\theta & - 4\mathrm{H}'^2 & & - 8\mathrm{H}'\sigma & \\ - 2h'^2 & & & & \end{array}\right. \quad \left.\begin{array}{|l} x + 12\lambda\mu \\ - 2\mathrm{H}^3\lambda\theta \\ - 8\sigma^2 \end{array}\right\} = 0. \quad [29]$$

We have now to express the pressure to the unit of surface at the point B' as equal to the limit R', when the reservoir is empty.

The value of u is thus equal to $\mathrm{B'K'} = y + \mathrm{HK'}$, and the value of HK is found by stating the moment of the whole weight with respect to the point B as equal to the sum of the moments of the components of this weight with respect to the same point.

The pressure of the water no longer existing, the value of P is

$$\mathrm{P} = \frac{2(s + bh')\delta' + h(x + y)\delta'}{2} = \frac{(2\sigma + h'x + h'y)\delta'}{2}.$$

And we find $u = \dfrac{2h'y^2 + 3h'xy + h'x^2 + 6\sigma y + 3bh'x + 6\mu'}{3(h'y + h'x + 2\sigma)}$, making $s\alpha + \dfrac{b^2h'}{2} = \mu'$.

This value of u, substituted in the relations [9] and [10], gives the two following equations [30] and [31];

$$\left.\begin{array}{|l|l|l|l|l|} \lambda y^2 + 2\lambda & xy + \lambda & x^2 + 2b\lambda & y + 2b\lambda & x + \lambda b^2 \\ - h' & - h' & - 2bh' & + bh' & + 6\mu' \\ & & + 2\sigma & - 4\sigma & - 4\sigma b \end{array}\right\} = 0. \qquad [30]$$

$$\left.\begin{array}{|l|l|l|l|l|} 2h'\lambda & y^2 + 3h'\lambda & xy + h'\lambda & x^2 + 6\lambda\sigma & y + 3bh'\lambda \\ - h'^2 & - 2h'^2 & - h'^2 & - 4h'\sigma & 4h'\sigma \end{array}\right. \quad \left.\begin{array}{|l} x + 6\mu'\lambda \\ - 4\sigma^2 \end{array}\right\} = 0. \quad [31]$$

Equation [30] or equation [31] will be required, according as u is greater or less than $\frac{l}{3}$.

The values of x and y will be obtained by combining one of the equations [28] and [29] with one of the equations [30] and [31]. These equations being of the second degree in x and y, there will be no difficulty in the matter of elimination, the rather complicated coefficients of the different terms being, in each particular case, replaced by numbers.

The choice of the equation, adapted to the question, may give occasion for tentative experiments as we have already explained, the value of the relation of u to $\frac{l}{3}$ which serves to determine this choice being a function of the unknowns. It will be necessary to make some hypotheses on the value of this relation, and having solved the equations chosen, to verify the suppositions; if this verification be unsatisfactory, the equations must be chosen by the aid of the values of the relation of u to $\frac{l}{3}$, calculated with the values found for x and y, which will be sufficiently near to enable us to follow out the indications given by this relation.

The first section A B $m'n'$ of the lower portion A B, A' B', of the profile, Fig. 2269, being determined, the dimensions of the second section $m'n'$ A B' may be calculated in the same manner with the equations just found by modifying them as follows;—

$s\delta'$ representing in the calculations the total weight of the portion of the barrage situate above the section considered, we must take into account the weight of the column of water which presses upon the face B' m', a weight equal to $s''\delta$ if we represent by s'' the vertical section $c'c$ B m' of this column; in the case under consideration we have $s'' = \left(h + \dfrac{h'}{2}\right) y_1$, denoting by y_1 the value of $m'm''$ from y which has been determined.

The weight of that portion of the barrage situate above the section considered will thus be $s'\delta' + s''\delta$, s' representing the surface c B $m'n'$ A D.

This quantity must be substituted for $s\delta'$ in the equations [28], [29], [30], and [31], by making $s\delta' = s'\delta' + s''\delta$, whence $s = s' + s''\theta$.

But the modifications to be introduced into the formulæ will not end here; the moment of the weight $s\delta'$ with respect to the point n' will be changed: we must take into account the moment of the weight $s''\delta$ of the water. Denoting by β' the distance from the centre of gravity of the surface s'' to the point n', we may state $s\delta'\beta = s'\delta'\beta + s''\delta\beta$, or $s\beta = s'\beta + s''\theta\beta$.

Substituting in the formulæ [28], [29], [30], and [31], for s and $s\beta$ the values so determined,

these formulæ become perfectly applicable to the determination of the dimensions of the section A m' n' B, and in general to the calculation of any section, knowing the preceding ones.

Determination by an Approximative Method of the Profile of Equal Resistance.—The profile to be adopted in practice consists, as we have seen, of three portions. The first C D B A, Fig. 2268, has a vertical face on each side; the second A B M N offers a vertical face on the side of the water and an inclined face on the outside, and the third M N S T has an inclined face on each side.

We have seen how the portion C D B A is determined. Below the horizontal plane B A we will suppose the barrage divided into sections of equal height, and the question is to calculate for each section the projections, such as $b'b''$, N n, $n'n''$, of the elements of the face upon the lower horizontal plane which serves as its base.

Let us see, in the first place, how any section A B, $c'b'$, of the portion B A M N may be determined. The height of this section is known, we will represent it by h'.

The problem will be solved at once by referring to the determination of the part M N B A of Fig. 2269 developed above.

We have merely to substitute in the equations [23] and [24] h' for the unknown height x, and we thus obtain the following equations;—

$$\lambda x^2 + 2(\lambda b + s)x + \lambda b^2 + 6\mu - 4b\sigma - \theta H^3 = 0, \qquad [32]$$

$$(2\lambda h' - h'^2)x^2 + 2\sigma(3\lambda - 2h')x + 6\mu\lambda - 4s^2 - \theta\lambda H^3 = 0. \qquad [33]$$

Making, as before [34],

$$\begin{cases} s + b h' = \sigma, \\ s\beta + \dfrac{b^2 h'}{2} = \mu, \\ h + h' = H. \end{cases}$$

These equations might be obtained directly by the method given for equations [23] and [24]. The first or the second will be employed according as u is greater or less than $\dfrac{b+x}{3}$.

The preceding formulæ will serve to calculate successively all the sections of the portion B A M N of the profile, Fig. 2268. Having determined each of them, it will be necessary to ascertain if the pressure in the points c', M, of the inner facing is below the limit R'; when this limit is exceeded, a talus must be given to both facings, and we pass on to determine the last portion M N S T of the profile.

This problem has been solved above in determining the lower part of the profile of Fig. 2272. The formulæ to be employed are the equations [28], [29], [30], and [31].

2273.

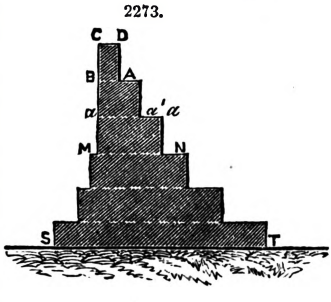

M. de Sazilly, in his considerations, published in 1853 in the 'Annales des Ponts et Chaussées,' on the walls of reservoirs, adopted a profile differing slightly from that of Fig. 2268, for the calculation of a wall the form of which should deviate but little from that of equal resistance. This engineer, instead of supposing the faces of the wall formed of successive inclined surfaces, assumed that they ought to be composed of a system of vertical facings of inconsiderable height, separated by gradations or retreats, as shown in Fig. 2273.

The profile is calculated for the condition that the pressure exerted upon each of the inner angles of the outer facing, when the reservoir is full, shall be equal to the limit R', and that this limit shall be reached upon the inner angles of the inside facing when the reservoir is empty.

The upper portion C D B A of the profile is determined in exactly the same way as in Fig. 2268. The breadth of the summit a and the height A D = x, are connected according to the case by one of the equations [14] and [15].

$$\theta x^3 + a^2 x - a^2\lambda = 0, \quad [14] \qquad \theta\lambda x^2 + 4a^2 x - 3\lambda a^2 = 0. \quad [15]$$

To put these equations in the form of those given by M. Sazilly, they must be solved with respect to a; we thus obtain the formulæ [35] and [36], which, with the difference of notation, are precisely those given in p. 244 of Graeff's paper, 'Annales des Ponts et Chaussées,' 1866.

$$a = x\sqrt{\frac{\theta x}{\lambda - x}}, \qquad [35] \qquad a = x\sqrt{\frac{\theta\lambda}{3\lambda - 4x}}. \qquad [36]$$

The graduations of the second portion A B M N of the barrage may be calculated in the manner described for the corresponding part A B M N of Fig. 2268. We thus get the following equations;—

$$(\lambda - h')(b + x)^2 + 2(\sigma - b h')(b + x) - \theta H^3 + 6\mu - 6b\sigma + 3b^2 h' = 0,$$
$$h'(3\lambda - 4h')x^2 + 2\sigma(3\lambda - 4h')x - 4\sigma^2 + 6\mu\lambda - \theta H^3\lambda = 0.$$

Solving these equations, we arrive at the following formulæ;—

$$x + b = -\frac{\sigma - b h'}{\lambda - h'} + \sqrt{\left(\frac{\sigma - b h'}{\lambda - h}\right)^2 + \frac{\theta H^3 - 6\left(\mu - \sigma b + \frac{1}{2}b^2 h'\right)}{\lambda - h'}}, \qquad [37]$$

$$x = -\frac{\sigma}{h'} + \sqrt{\left(\frac{\sigma}{h'}\right)^2 + \frac{4\sigma^2 - \lambda(6\mu - \theta H^3)}{h'(3\lambda - 4h')}}. \qquad [38]$$

The first or second of these will be employed according as

$$u = \frac{\mu + \sigma x + \frac{h' x^2}{2} - \frac{\theta H^3}{6}}{\sigma + h' x} < \text{or} > \frac{1}{3}(b + x).$$

The third portion M N S T of the profile may be determined by the methods employed above for Fig. 2268. The following equations must be substituted for those [28, 29, 30, 31] relative to this latter profile.

λ $-h\theta$ $-h'$	$y^2 + 2\lambda$ $+2h\theta$ $-2h'$	$xy + \lambda$ $-h'$	$x^2 + 2b\lambda$ $+2bh\theta$ $+2bh'$ -4σ	$y + 2b\lambda$ $-4bh'$ $+2\sigma$	$x + b'\lambda$ $-4b\sigma$ $-H^3\theta$ $+6\mu$	$= 0.$ [39]
$3h'\lambda$ $+3h\lambda\theta$ $-4h^2\theta^2$ $-8hh'\theta$ $-4h'^2$	$y^2 + 6h'\lambda$ $+6h\lambda\theta$ $-8hh'\theta$ $-4h'^2$	$xy + 3h'\lambda$ $-4h'^2$	$x^2 + 6bh'\lambda$ $+6bh\lambda\theta$ $-8h\theta\sigma$ $-8h'\sigma$	$y + 6\lambda\sigma$ $-8h'\sigma$	$x + 6\lambda\mu$ $-H^3\lambda\theta$ $-4\sigma^2$	$= 0.$ [40]
λ $-h'$	$y^2 + 2\lambda$ $-2h'$	$xy + \lambda$ $-h'$	$x^2 + 2\sigma$ $+2b\lambda$ $-4bh'$	$y + 2b\lambda$ -4σ $+2bh'$	$x + \lambda b^2$ $+6\mu'$ $-4b\sigma$	$= 0.$ [41]
$3h'\lambda$ $-4h'^2$	$y^2 + 6h'\lambda$ $-8h'^2$	$xy + 3h'\lambda$ $-4h'^2$	$x^2 + 6\lambda\sigma$ $-8h'\sigma$	$y + 6bh'\lambda$ $-8h'\sigma$	$x + 6\lambda\mu$ $-4\sigma^2$	$= 0.$ [42]

These equations must be employed in the same way as those relative to Fig. 2268.

Conditions of Stability with respect to Slipping.—Having calculated the profile of a barrage in accordance with the preceding considerations, it will be necessary to ascertain if its dimensions are such as to hinder the wall from slipping horizontally upon one of its courses or upon its foundation.

Denoting by H the distance of a course below the top, the force which tends to make this course slide upon its bed is equal to the horizontal component of the thrust of the water against that portion of the inner facing which is situate above this course, and it is given by the equation

$$F = \frac{\delta H^2}{2}$$

The resistances to the action of this force are friction and the cohesion of the masonry. The friction is proportional to the weight of the upper portion of the structure, and the force of cohesion to the thickness of the wall.

Representing the coefficient of friction by f, the force of cohesion to the unit of surface by γ, the surface of that portion of the profile situate above the course considered by s, and the thickness of the wall at this point by b, the resistance R to slipping will be $R = s\delta' f + \gamma b$, and we must have

$$s\delta' f + \gamma b > \frac{\delta H^2}{2}, \text{ or } 2\frac{(s\delta f + \gamma b)}{\delta H^2} > 1. \qquad [43]$$

This inequality must be verified for all the horizontal sections of the profile. It must also be verified for the base of the foundations; f and γ then representing the coefficients relative to the soil upon which the structure stands.

It will be prudent in practice, for greater safety, not only to make the quantity $\frac{2(s\delta f + \gamma b)}{\delta H^2}$ greater than unity, but equal to the value found for existing reservoirs which have not yielded in any degree. We will consider later the application of formula [43].

Having determined by the aid of the preceding formulæ the dimensions of the profile and proved the conditions of stability with respect to slipping between the courses to be satisfactory, we have now to ascertain if the soil of the foundation is capable of supporting the limit of pressure adopted for the masonry, and if the wall is not liable to slip upon the soil which supports it. The precautions to be taken in these cases are to render the soil of the foundations more solid by processes usually employed in important works and to diminish the pressure upon the soil by widening the base of the profile.

Dams or Barrages suitable to Narrow Valleys.—Barrages constructed in the form of an Arch.—Hitherto we have not considered the length of the barrages whose dimensions we have determined; the profiles calculated are such that any length of the structure resists by its own weight only the action of the forces to which it is subject. In the case in which the valleys to be barred are narrow and formed of a resisting soil, it is possible, by giving the barrages the form of an arch, to transmit the thrust horizontally to the sides of the valley, and we have to see if, in certain cases, this arrangement will enable us to reduce the dimensions of the profile.

It is easy to ascertain the influence of the arrangement by which the thrust is transmitted laterally to the sides of the valley. Take Fig. 2256 as an example. This profile is subject to the action of two forces, the weight P and the thrust F. In the case in which the wall is rectilineal or indefinite, these two forces combine to produce a resultant R, and to ensure the stability of the structure the point E, where this resultant meets the foundation, must be within the base A B,

and at a sufficient distance from the outer edge B to prevent the pressure in this point from exceeding the limit R'.

In the case, on the contrary, in which the wall, being of the arched form, transmits the thrust F laterally, this force is destroyed by the reaction of the earth, and thus does not combine with the weight P.

It seems from this that, in certain cases, the thickness at the base may be reduced; but to treat the question thoroughly, we must find the thickness to be given to a barrage, so that the masonry which transmits the thrust laterally shall not bear in any point a pressure greater than the limit R'.

Suppose A'EB', A''CB'', Fig. 2274, to represent a horizontal section at a distance H below the top, and the lines VV, V'V', the section of the sides of the valley through the same horizontal plane. The thrust F of the water in each point E' of the inner face A'EB' of the wall is normal to this curve. The determination of the thickness CE to be given to the wall offers a close analogy to the ordinary problem concerning the stability of arches; only the pressures upon each voussoir, instead of being parallel with each other and equal to the weight of this voussoir, are all normal to the outer curve A'EB', and equal to each other, if we suppose the arch divided into equal voussoirs.

2274.

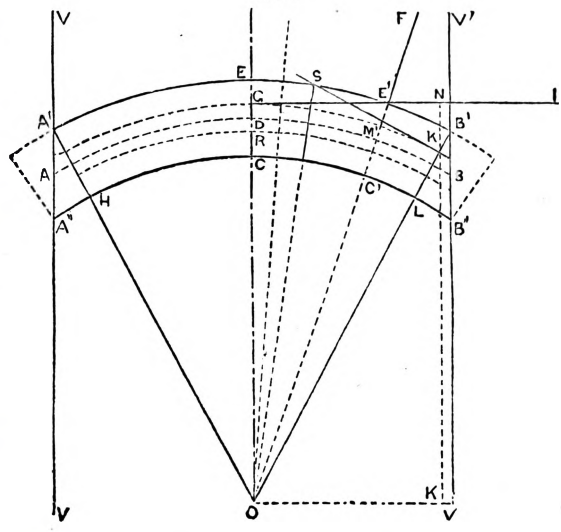

These conditions render the problem easier of solution than for the case of an ordinary arch, and enable us to find an equation which gives at once the depth at the crown.

Admitting that the curve A'EB' is an arc of a circle having its centre at O, suppose the thickness CE at the crown determined by the condition that the curve of the pressures passing by the point G, the pressure at the nearest extremity E shall be equal to the limit R'. The curve of the pressures is necessarily perpendicular to all the actions of the pressure of the water upon the arch which converge to the centre O, and, consequently, this curve is a circle concentric to that which forms the outer face.

This granted, to ensure the stability of the structure, there must be equilibrium in the half-arch ECLB' between the reaction of the abutment at the point K, the pressures of the water between the points E and B', and the reaction R of the half-arch A'HEC.

This condition of stability leads to the following equation;

$$\Sigma M_k F = R \times KN, \qquad [44]$$

which expresses the sum of the moments of the thrust of the water with respect to the point K as equal to the moment of the reaction R with respect to the same point.

Let $OE = \rho$, $OG = \rho'$; and let the angle EOB' be represented by A, the variable angle formed by the direction of any joint C'E' with the radius OB' by α, and the pressure of the water to the unit of surface at the depth considered by Ω.

The pressure of the water upon an element E' of the facing A'EB' is represented by $\Omega\, ds$, or by $\Omega \rho\, d\alpha$, since we have $ds = \rho\, d\alpha$.

The moment with respect to the point K of the elementary pressure F is thus

$$\Omega \rho\, d\alpha MK = \Omega \rho \rho' \sin.\ \alpha\, d\alpha,$$

and, consequently, $\Sigma M_k F = \int_{\alpha=0}^{\alpha=A} \Omega \rho \rho' \sin.\ \alpha\, d\alpha = \Omega \rho \rho' (1 - \cos.\ A)$.

Again, $KN = \rho' (1 - \cos.\ A)$, and, consequently, equation [44] becomes

$$\Omega \rho \rho' (1 - \cos.\ A) = R \rho' (1 - \cos.\ A),$$

or $\Omega \rho = R$. And as $\Omega = \frac{H^2 \delta}{2}$,

$$R = \frac{H^2 \rho \delta}{2}. \qquad [45]$$

The value of R being determined, the thickness $EC = x$ may be immediately deduced.

The pressure to the unit of surface upon the joint EC in the point E, where it is greatest, must be equal to the limit R'. This condition is easily expressed by means of formula [10];

$$\frac{2}{3} \frac{P}{u \delta'} = \lambda.$$

It is sufficient to make $u = \frac{x}{3}$. P = R, and we obtain $\frac{2R}{x} = \lambda\delta'$, or substituting the value [45] of R;

$$x = \frac{H^2\rho\theta}{\lambda}. \qquad [46]$$

We must remark that a stone structure is capable of resisting as an arch only so long as the thickness at the crown is not too great with respect to the radius. The present state of science, in the matter of the stability of arches, does not enable us to lay down with mathematical precision the limiting value of this relation, but we may consider as certain that the hypotheses which led us to formula [46] will not be realized if the thickness at the crown exceeds the third of the radius. Let us, therefore, take as the limit of x, $x = \frac{\rho}{3}$, and calculate the corresponding value of H.

Formula [46] becomes $\frac{\rho}{3} = \frac{H^2\rho\theta}{\lambda}$, and we deduce from it

$$H = \sqrt{\frac{\lambda}{3\theta}}. \qquad [47]$$

Making $\lambda = 30$, and $\theta = \frac{1}{2}$, we obtain H = 4·47, whence we must conclude that for barrages of a height greater than $4^m \cdot 47$ we should be obliged to adopt a thickness at the crown much too great with respect to the dimensions of the radius to allow the materials to resist as an arch.

Maximum Breadth of the Profile at the Base in Narrow Valleys.—In the case of narrow valleys, the retaining wall of a barrage is built into the rocks on each side, and this circumstance allows us to adopt a thickness somewhat less than that required when the wall resists by its own weight only.

It is evident that the walls of a reservoir need never possess a thickness greater than the breadth of the valley at the height considered.

Let V V′ V V′, Fig. 2275, be the section of the sides of the valley. A B C D is the horizontal section of a wall having a thickness D B equal to the breadth A B of the valley at the height considered; trace the diagonals A D, C B, of the square A B C D. A barrage composed of the triangles A O B, C O D, would be sufficient to resist the pressure of the water; indeed, the thrust being at each point directed perpendicularly to the surface pressed, we see that all the forces, such as F, F′, F″, pressing against the face A B will meet the rock between the point D and the point B, and that their action will be destroyed by the resistance of this rock. It will be the same with respect to the forces applied to A O.

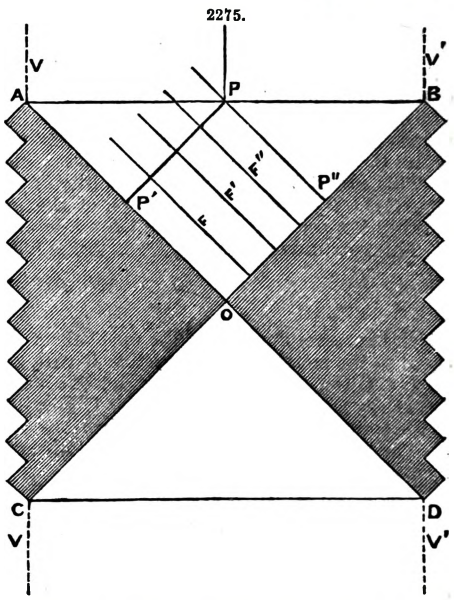

Practically, we must suppose the triangle A O B filled with masonry to support the upper portion of the barrage, which, corresponding to a greater breadth in the valley, has been constructed to resist by its weight the action of the water. But the barrage formed by the square A B C D will evidently resist as well as that formed by the two triangles A O C, B O D; the part A O B will act like a wedge designed to transmit the pressure exerted upon the face A B perpendicularly to the diagonals A O and O B. The resultant P of the actions of the thrust upon the face A B is resolved into two forces P′ and P″ normal to the diagonals O B, A O, which produce upon these faces the same action as that exerted by the direct thrust of the water in the case in which the triangle A O B is supposed removed.

We see from the foregoing considerations that a wall having the thickness of the valley to be barred will transmit directly to the sides of the valley the horizontal actions of the thrust of the water, and that it will thus run no risk of being overthrown. But to ensure the stability of the structure in a satisfactory manner from the point of view of the resistance of the materials, the thrust of the water must in no point give rise to a pressure greater than R′.

The height which a barrage may have without exceeding the limits of this condition is easily determined. The pressure exerted to the unit of surface on the face A B is represented by H δ; this pressure gives rise to two forces perpendicular to the diagonals C B A B or to the surface of the rocks arranged in gradations parallel to these diagonals the value of which is $\frac{H\delta}{\sqrt{2}}$. To ensure this stability, this pressure must be equal at the most to $R' = \lambda\delta'$, and, consequently, we ought to have $\frac{H\delta}{\sqrt{2}} = \lambda\delta'$; whence $H = \frac{\lambda}{\theta}\sqrt{2}$. Admitting as before, $\lambda = 30$, $\theta = \frac{1}{2}$, we obtain H = 84·852. Hence we conclude that so long as the height of the barrage does not exceed

$84^{m}\cdot852$, it is not necessary to give it a thickness greater than the breadth of the valley to enable it to resist the action of the water. As barrages never reach this height, we may conclude in a general manner that the wall of a reservoir will always be capable of resisting the action of the water, if at all points it possesses a thickness equal to the breadth of the valley.

To determine a Profile for a Valley of given Dimensions.—If it be wished to apply to a valley of a determinate breadth, a profile calculated according to the conditions laid down in the early portion of these remarks, its thickness may be reduced when it reaches a value equal to the breadth of the valley. The height beyond which the thickness cannot be calculated according to those conditions may be determined by a very simple geometrical construction. Thus, Fig. 2276, draw perpendicularly to the right line O O′ the breadths O B″, A′B′, A B, C′ D′, C D, of the barrage considered at the various heights, and draw also the breadths O S, M′ N, N′ N, P′ P, Q′ Q, of the valley. Join the points B″, B′, B′, D′, D, which are the extremities of the first perpendiculars; join in like manner the extremities of the S, M, N, P, etc., of the second series of perpendiculars. The distance T T′ from the point T, where these two lines meet at the top of the barrage, will be the height sought.

By giving to the barrage from the height T T′ a thickness T T′ equal to the breadth of the valley at this point, we shall ensure its being capable of resisting the action of the water. At the lower part there will be an excess of section, since the breadth of the valley decreases, and since it is sufficient for the wall to have in every point a thickness equal to this breadth.

But it will also be necessary to see that the vertical forces which continue to be transmitted to the foundations do not, in any point, produce a pressure to the unit of surface greater than the limit R′. This consideration will require an increase in the thickness of the wall from the point T, but it will be less considerable than in the case in which the wall resists by its own weight, because the thrust F, being destroyed by the lateral resistance of the abutments, will not have the effect of driving the point of application E of the vertical force upon the base towards the outer edge A′, as in the case of Fig. 2272, for example.

2276.

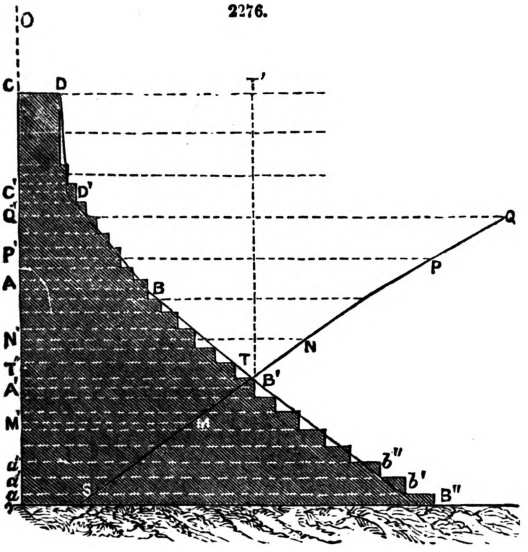

2277.

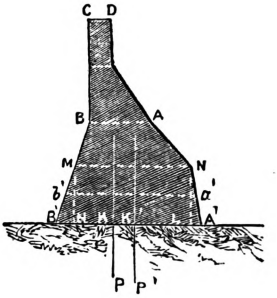

The dimensions of the lower portion of the profile may be calculated by the following considerations;—Let M N, Fig. 2277, be the horizontal plane passing through the height just determined; let $M N = b$, $M H = h'$, $s\,\delta'$ the weight of the upper portion C D M N of the barrage, $s'\,\delta$ the weight of the water acting upon the inclined surface M B, α the distance at the point M from the centre of gravity of the portion C D M N, and β the distance at the point N from the vertical resultant of the actions of the weight of the masonry and of the water upon the face M B. We will take as unknown $B' H = y$ and $L A' = x$.

The question may be solved in the same way as those which we have already treated, namely, by expressing the pressure to the unit of surface at the points A′ and B′, according as the reservoir is full or empty, as equal to the limit R′. The equations of the problem will still be the expressions [9] and [10], $2\left(2-\frac{3u}{l}\right)\frac{P}{\delta' l}=\lambda$, $\frac{2}{3}\frac{P}{u\,\delta'}=\lambda$, in which we must substitute for the quantities P, l, u, their values as functions of the data of the question.

Considering, in the first place, the case in which the reservoir is full, we have

$$P = s\,\delta' + s'\,\delta + b\,h'\,\delta' + \frac{h' x}{2} + \frac{h' y}{2} + \left(\frac{2h+h'}{2}\right) y\,\delta.$$

Making, for greater convenience,

$$s + s'\,\theta + b\,h' = \sigma, \text{ and } 2h + h' = H', \; P = \frac{\delta}{2}\,[2\sigma' + h' x + y\,(h' + H'\theta)].$$

Again, $u = A' K = x + L K$.

The value of L K is found by expressing the moment of the whole weight P, with respect to the point N, as equal to the sum of the moments of the vertical forces composing it.

Making $(s + s'\theta)\beta + \frac{b^2 h'}{2} = \mu''$, we thus obtain

$$u = \frac{(2h' + 3h'\theta)y^2 + 6(h' + H'\theta)xy + 4h'x^2 + 6b(h' + H'\theta)y + 12\sigma' x + 12\mu''}{6(2\sigma' + h'x + y(h' + H'\theta)}$$

Substituting this value of u as well as those of P and $l = b + x + y$ in [9] and [10], we obtain the following equations;—

2λ $-H'\theta$ $-2h'$	$y^2 + 4\lambda$ $+2H'\theta$ $-2h'$	$xy + 2\lambda$	$x^2 + 4b\lambda$ $+2bH'\theta$ $+2bh'$ $-8\sigma'$	$y + 4b\lambda$ $-4bh'$ $+4\sigma'$	$x + 2\lambda b^2$ $+12\mu''$ $-8\sigma' b$	$= 0.$ [48]
$2h'\lambda$ $+3H'\theta\lambda$ $-4H'h'\theta$ $-2H'^2\theta^2$ $-2h'^2$	$y^2 + 6h'\lambda$ $+6H'\theta\lambda$ $-4H'h'\theta$ $-4h'^2$	$xy + 4h'\lambda$ $-2h'^2$	$x^2 + 6bh'\lambda$ $+6bH'\lambda\theta$ $-8\sigma'h'$ $-8H'\theta\sigma'$	$y + 12\lambda\sigma'$ $-8h'\sigma'$	$x + 12\mu''\lambda$ $-8\sigma'$	$= 0.$ [49]

The first or the second of these equations will be required according as u is greater or less than

$$\frac{b + x + y}{3}.$$

The pressure to the unit of surface at the point B' when the reservoir is empty, which pressure is equal to the limit R', remains to be expressed. The equations expressing this condition differ in nothing from those numbered [30] and [31]. Combining one of these two equations with one of the equations [48] and [49], we may determine the unknown x and y.

Having determined by the preceding conditions the lower portion M N B' A' of the profile, we shall be sure that the pressure to the unit of surface in A' or B', according as the reservoir is full or empty, will be equal to the limit R', and that at the same time the pressure at the corresponding points a' and b' of the same horizontal section will be less than this limit. The cube of the masonry may be determined by dividing the surface M N B' A' into a certain number of zones, such as M N, $m'n'$, $m''n''$, and so on, and calculating the lengths $m'h'$, $l'n'$, $m''h''$, $l''n''$, and so on, Fig. 2278, to the condition that the pressures at the points $m'n'$, $m''n''$, shall be equal to the limit adopted. The preceding formulæ will serve to solve this question; it will be sufficient to suppose that H', instead of offering the height M H, is equal to the height M h' of the sections.

2278.

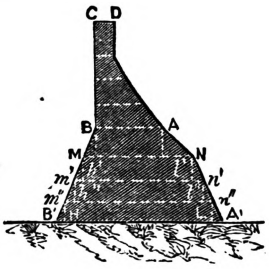

2279.

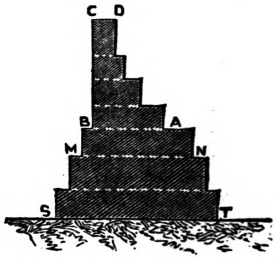

If a graduated facing be employed in the upper portion, it will be well to employ the same system in the lower portion, Fig. 2279.

The calculations are made in exactly the same way as those which we have developed, always denoting the edge of the outer gradations by x, and that of the inner gradations by y. The equations [48], [49], [30], and [31], are replaced by the following;—

λ $-h'$ $-h\theta$	$y^2 + 2\lambda$ $-2h'$ $+2h\theta$	$xy + \lambda$ $-h'$	$x^2 + 2b\lambda$ $+2bh'$ $+2bh\theta$ $-4\sigma'$	$y + 2b\lambda$ $+2\sigma'$ $-4bh'$	$x + \lambda b^2$ $+6\mu''$ $-4b\sigma'$	$= 0.$ [50]
$3h'\lambda$ $+3h\theta\lambda$ $-4h^2\theta^2$ $-8hh'\theta$ $-4h'^2$	$y^2 + 6h'\lambda$ $+6h\theta\lambda$ $+8hh'\theta$ $-8h'^2$	$xy + 3\lambda h'$ $-4h'^2$	$x^2 + 6bh'\lambda$ $+6bh\theta\lambda$ $-8\sigma'h\theta$ $-8\sigma'h'$	$y + 6\lambda\sigma'$ $-8h'\sigma'$	$x + 6\lambda\mu''$ $-4\sigma'^2$	$= 0.$ [51]
λ $-h'$	$y^2 + 2\lambda$ $-2h'$	$xy + \lambda$ $-h'$	$x^2 + 2\sigma$ $+2b\lambda$ $-4bh'$	$y + 2b\lambda$ -4σ $+2bh'$	$x + \lambda b^2$ $+6\mu'$ $-4b\sigma$	$= 0.$ [41]
$3h'\lambda$ $-4h'^2$	$y^2 + 6\lambda h'$ $-8h'^2$	$xy + 3h'\lambda$ $-4h'^2$	$x^2 + 6\lambda\sigma$ $-8h'\sigma$	$y + 6bh'\lambda$ $-8h'\sigma'$	$x + 6\lambda\mu'$ $-4\sigma^2$	$= 0.$ [42]

Application of the Theory to the Calculation of Various Profiles of Dams.—To render more complete the theoretical considerations which we have developed above, we have applied them to the determination of the profile of a barrage 50 mètres in height and unlimited in length, and of that of the barrage of the Furens which dams the valley at a point where it is only 7 mètres broad at the bottom.

In these calculations we have supposed that the density of water being equal 1000, that of the

masonry would be equal to 2000, so that we have $\delta = 2000$, $\delta = 1000$, $\theta = \frac{1}{2}$. In choosing the limit R′ for the pressure to the unit of surface on the masonry and on the soil of the foundations, we were led to adopt 6 kilogrammes to the square centimètre, or 60,000 kilogrammes to the square mètre, so that in these calculations we have R′ = 60,000 and $\lambda = 30$. By admitting this limit, we shall keep within the conditions of stability. The walls of the barrage of Bosmeleac, to which we have before alluded, and of Clomel on the canal from Nantes to Brest, support, in certain points a pressure greater than 6 kilogrammes to the square centimètre, and these structures are in a state of perfect preservation.

Profiles with Inclined Facings applied to Walls of 50 mètres in height.—In the first place, we determined two profiles for valleys of great breadth by means of the calculations developed in the early portion of these considerations. These profiles are represented by Figs. 2240 and 2280. To the former of these we have already called attention when speaking of the barrage of the Furens.

By means of the equations [16] and [18] we first determined the height C A, Fig. 2280, throughout which the inner face might be vertical, and the corresponding breadth A B. We then admitted that the lower portion of the barrage should terminate in two inclined facings A A′, B B′, and the dimensions of this portion of the structure were determined by means of the equations [28] and [30]. The barrage thus constructed possesses this property, namely, the pressure to the unit of surface in the points A, B, A′, B′, is equal to 6 kilogrammes to the square centimètre, but less than this limit for any horizontal section, such as *m n*, other than A B, and A′ B′. Thus the pressure at the point *n* in the horizontal plane passing through the middle of C A, is equal to only $1^{k} \cdot 79$ to the square centimètre.

2280.

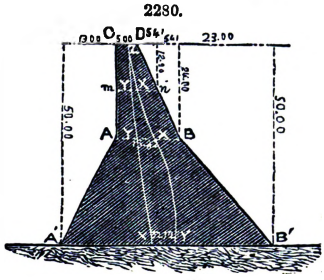

The profile of Fig. 2240 is constructed in accordance with more economical conditions. We have supposed each of the portions C D B A, A B A′ B′, into which the profile is necessarily subdivided, itself divided into two portions. The dimensions of the portion C D *m n* were determined by means of equation [22], in which the height *h* was made equal to 12·00. The breadth *m n* having been calculated, the dimensions of the part *m n* A B were found by means of the equations [17] and [19]. To construct the lower portion A *m′* A′ B′ *n′* B, the height of 24 mètres which it possesses was supposed divided into two equal portions, and recourse was had to the equations [29] and [31] to determine successively the breadths *m′ n′* and A′ B′.

A profile so determined incurs a pressure equal to the limit R′ only through the sections *m n*, A B, *m′ n′* A′ B′; for all other sections this pressure is less than 6 kilogrammes to the square centimètre, as may be seen in Table A, columns 11 and 12 containing the pressures when full and when empty upon sections taken at every 2 mètres from the top. We may remark that the pressures when full are, in the upper portion, far from reaching this limit; this will not be surprising when it is borne in mind that the theoretical profile ought to have a thickness nul at the summit, whilst we have been led to give it a breadth of 5 mètres. The curves of the pressures when full and when empty are described on Fig. 2240; Z X X X is the curve relative to the case in which the reservoir is full, and Z Y Y Y is the curve when empty. The abscissæ such as X *m* Y *n* of these curves, which are nothing but the value of *u* in the expressions [1] and [2] that give the pressures, are placed in columns 9 and 10 of Table A.

The profile we are considering is in good conditions of stability with respect to the pressure supported by the masonry: it remains to be proved whether the stability be equally sure with respect to the slipping of the courses of the masonry one over another, and of the whole structure upon the soil of the foundation. We have seen that to ensure the stability of the structure in regard to this question of slipping, we must have for each course $2\left(\frac{s\delta' f - \gamma b}{\delta H^2}\right) > 1$, or at the limit

$$2\left(\frac{s\delta' f + \gamma b}{\delta H^2}\right) = 1. \qquad [43]$$

In this equation *f* represents the coefficient of friction on the masonry, γ the force of cohesion in the masonry to the unit of surface, *b* the breadth of the profile in the course considered, and *s* the surface of the portion situate above this course.

Neglecting the cohesion of the masonry, and thus assuming unfavourable conditions, equation [43] becomes $\frac{2 s\delta' f}{\delta H^2} = 1$, or $f = \frac{\frac{\delta H^2}{2}}{s\delta'}$.

In column 8 of Table A will be found the value of this quantity, which is none other than that of the ratio of the thrust to the vertical pressure. It will be seen that the maximum value it attains is 0·7304, and as $0^{m} \cdot 76$ is usually admitted for the coefficient *f*, we may conclude that the profile of Fig. 2240 is in good conditions of stability with respect to slipping, even when we do not take into account the cohesion of the mortar.

Profile of Equal Resistance calculated by the Approximative Method for a Wall 50 mètres in height.—The principles developed by us respecting the determining of a profile differing but little from one of equal resistance, have been applied to a barrage 50 mètres in height. The upper portion C D B A of this profile, which was represented in Fig. 2241, was determined by means of the equation [36]; the remainder of the barrage was supposed to be divided into sections of a constant height of 2 mètres. The graduations included between the plane B A and C′ C″ in that portion in which the profile is vertical on the side of the water were calculated by means of the equations [37] and [38], taking care, when choosing the one suited to each graduation, to conform to the instructions which

we have already given relative to this matter. The lower portion of the barrage was calculated by means of the equations [39], [40], [41], and [42]. But as these calculations are very intricate and tedious, when a sufficient number of graduations has been determined to give nearly the form of the curves passing through their re-entering angles, we may calculate the salient angles x and y tentatively by choosing as the first approximative values those which result from the intersection of these curves produced with the horizontal planes forming the base of the graduations, and modifying these values until the pressures resulting from them are equal to 6 kilogrammes to the square centimètre. Table B, drawn up in the same manner as the Table relating to Fig. 2240, contains all that it is interesting to know with respect to the profile of Fig. 2241. It will be seen that the maximum value to be given to the coefficient of friction, to satisfy the conditions of stability with respect to slipping, is 0·7324, a value less than the limit applicable to masonry.

Comparison of the Profiles calculated.—Profile to be adopted.—There is no need of insisting upon the advantages possessed by profiles deviating but little from one of equal resistance. It is perfectly clear that a reservoir wall calculated so as to offer on certain points pressures much less than the limit not to be exceeded, might, with a more rational arrangement, have had smaller dimensions without offering less security. The profiles of Figs. 2240, 2241, differ very little from one of equal resistance; the former admits the limit of pressure only upon the sections $m\,n$, A B, $m'\,n'$, A′B′; the latter admits it upon all the re-entering angles of the graduations. In all the other points of the facing, in both profiles, the pressure to the unit of surface is less than the limit adopted. It remains for us to compare these two profiles. From the point of view of stability with respect to the pressures, the advantages which they offer are nearly identical. The same may be affirmed with respect to the resistance to slipping; in the former, the maximum value to be given to the coefficient of friction in the masonry is 0·7034, it is 0·7324 in the latter. Either of these profiles might be chosen indifferently if no question foreign to stability had to be taken into consideration. But there are other conditions in works of such magnitude which may not be overlooked. These are the suitability of the forms adopted to the materials to be used, the cost, and the effect produced from an artistic point of view. When the materials to be employed consist chiefly of porphyry, granite, or basalt, stones which, for the most part, do not admit of being regularly cut, it becomes especially difficult to construct the facings with horizontal joints. The profile of Fig. 2241, however, requires as an indispensable condition that the facings should be so constructed, and, having regard to the slight projection of the graduation, we should be under the necessity, in order to obtain a solid structure, to cover them with stones equal in length to this projection. On the contrary, the facings of the profile of Fig. 2240 may be easily executed with materials hard to cut, by adopting the system of irregular joints, the only practicable one with the greater part of porphyries. From the point of view of cost, the profile 2240 again offers the greatest advantages; it presents, in fact, a cube of only 995^{m}·30 to the lineal mètre, whilst that of Fig. 2241 has 1028·75 cubic mètres; the surface of the exposed facings is 119·70 square mètres for the former and 152·15 square mètres for the latter. Supposing 12 francs to be the price of the cubic mètre of the ordinary masonry and 20 francs the price of the masonry of the facings, we have as the cost by the lineal mètre of Fig. 2240 the sum of 12230·88 francs, which cost is increased to 12710·28 francs for Fig. 2241, thus offering a saving of 479·28 francs in favour of the former. This saving would really be greater, for we have supposed the cost of the masonry of the facings to be the same in both cases, whilst for Fig. 2241 it would certainly be considerably greater. From the point of view of artistic effect, it seems to us that the outer face of Fig. 2240 presents a nobler aspect than the graduations of Fig. 2241.

The foregoing considerations lead us to give the preference to the profile Fig. 2240, and that is the one we should propose if we were called upon to design the wall of a large reservoir.

Before leaving this subject, we will examine some objections made to a system similar to the one we propose by M. de Sazilly. According to this well-known engineer, the principal objections to facings presenting a polygonal outline are the following;—

1. The acute angles formed by the horizontal sections of the wall and of the facings place the latter in unfavourable conditions for resisting the weight which they have to support.

2. The too gentle slope of the outer face favours the growth of parasitic plants, whose effect is always destructive.

3. The execution of a facing having a polygonal contour, while presenting an ungraceful appearance, is attended with practical difficulties.

The last of these objections does not apply to Fig. 2240, since the outer face presents only four changes of inclination, the first of which is alone perceptible to the eye. The second objection applies with greater force to the horizontal portion of the graduation of Fig. 2241. True M. de Sazilly proposes to cover them with a layer of bitumen; but the growth of vegetation may be easily prevented on the facings of Fig. 2240, and with less expense, by carefully executing the joints and keeping them in a good condition. The first objection, which is certainly the most serious, is of less importance in the case of our profile than in the case of the one to which it was applied. Indeed, this latter has a polygonal contour concave with respect to the straight facings n B, B n', n' B′, of Fig. 2240, and, consequently, the sides of this polygon make with the horizontals in each point angles smaller than those of our profile. But in any case, this objection may be removed by arranging the masonry of the facings normally to the surface of these facings. With this arrangement they will certainly be in better conditions of resistance than those of the graduations of Fig. 2241, which the pressure may tend to separate from the mass of the structure along the lines which join the re-entering angles.

Profile of the Barrage 50 mètres in height constructed on the Furens.—At the part where this barrage is constructed, the valley is only 7 mètres broad at the bottom, as shown in Fig. 2281. This circumstance, as we have already seen, enables us to diminish the breadth of the barrage at the bottom. To determine the point from which, the profile having reached the breadth of the valley, the horizontal thrust is destroyed by the resistance of the rocks, we have applied succes-

sively to the profiles 2240, 2282, and 2241 the construction shown in Fig. 2276. The lines O S, M′M, N′N, P′P, Q′Q, drawn perpendicularly to the vertical line O O′, are equal to the breadth of the valley at the heights O M′, O N′, O P′, and so on, above the bottom.

The lines O B″, A′B, A B, C′D, C D, are equal to the breadth of the profile, Fig. 2240; at the heights O K, O A, O B, O C′, O C, the lines $a'b'$, $b''a''$, and so on, represent the breadths of Fig. 2241. We see from the construction that the breadth of the barrages reaches the breadth of the valley at a height above the foundation comprised between 14 and 15 mètres for Fig. 2240, and between 15 and 16 mètres for Fig. 2241. To avoid fractional numbers in the height of the sections into which the profiles are divided, we have taken 14 mètres for the first of these heights, and 15 mètres for the second. The lower portion of the profiles suitable to the valley of the Furens was calculated by means of the formulæ relative to valleys of given dimensions, and in this way were obtained the two profiles, Figs. 2242, 2243, referred to when treating of that barrage. The breadth of Fig. 2242 at the base was calculated by means of the equations [48] and [30], from which the values $A'p = y$ and $B'q = x$ were deduced. The graduations of Fig. 2243 were calculated by means of the equations [50] and [41]. These two profiles are exactly similar to those of Figs. 2240, 2241, as far as the plane $m'n'$, and Tables A and B contain all that is required to calculate their resistance. Table C contains the same elements for the lower portions; only the horizontal component of the thrust being directly destroyed by the resistance of the rocks, the slipping of one course of masonry over another is rendered impossible; for this reason we have not given in this Table the elements relating to the resistance to slipping.

2281.

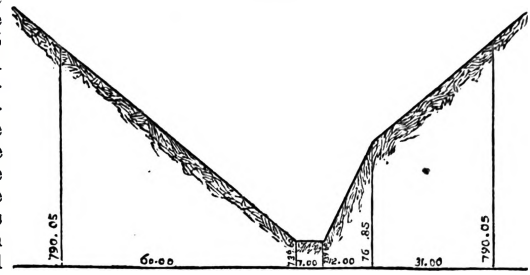

It will be noticed that the curves of the pressures when full Z X X X in these two profiles present a point of retrogression where they meet the plane $m'n'$; there is nothing surprising in this, as it was from this plane that the horizontal component was supposed to be completely destroyed, but in reality the point of inflexion would have no existence, because on approaching the plane $m'n'$, before being completely destroyed, the thrust would be weakened, and thus the curve of the pressures would be brought nearer the inner face, and would assume the form shown by the dotted line.

TABLE A.

Height measured from the Top.	Volume of the Masonry to the lineal mètre.	Reduced Thickness.	Ratio of the Reduced Thickness to the Height.	Total Vertical Pressures.	Horizontal Thrusts.	Ratio of the Pressure to the Thrust.	Value to be given to the Coefficient of Friction for Equilibrium.	Abscissæ of the Curve of the Pressures when full.	Abscissæ of the Curve of the Pressures when empty.	Maximum Pressure to the square centimètre when full.	Maximum Pressure to the square centimètre when empty.
1	2	3	4	5	6	7	8	9	10	11	12
				tons.	tons.					kilos.	kilos.
2	10·253	5·1265	2·5632	20·506	2·00	10·2530	0·095	2·62	2·56	0·39176	0·27002
4	21·012	5·2530	1·3131	42·024	8·00	5·2530	0·190	2·59	2·65	0·91916	0·85344
6	32·278	5·3796	0·8966	64·556	18·00	3·5864	0·275	2·50	2·69	1·56894	1·34472
8	44·052	5·5065	0·6883	88·104	32·00	2·7532	0·360	2·28	2·76	2·52140	1·84464
10	56·330	5·6330	0·5633	112·660	50·00	2·2532	0·440	1·94	2·82	3·86172	2·34540
12	69·120	5·7600	0·4800	138·240	72·00	1·9200	0·520	1·54	2·89	5·98441	2·83232
14	83·608	5·9720	0·4265	167·216	98·00	1·7062	0·585	2·21	3·02	5·04719	3·65052
16	100·993	6·3120	0·3945	201·986	128·00	1·5748	0·630	2·78	3·25	4·83752	4·15936
18	121·275	6·7375	0·3743	242·550	162·00	1·4972	0·665	3·30	3·56	4·90193	4·54354
20	144·451	7·2227	0·3611	288·908	200·00	1·4446	0·690	2·78	3·92	5·09510	4·91565
22	170·530	7·7513	0·3523	341·060	242·00	1·4082	0·705	4·24	4·32	5·36106	5·26631
24	199·503	8·3126	0·3463	399·006	288·00	1·3854	0·720	4·69	4·74	5·66761	5·60799
26	231·380	8·8992	0·3422	262·760	338·00	1·3690	0·730	5·14	5·19	6·00020	5·94619
28	267·020	9·5364	0·3406	548·855	392·00	1·4001	0·7143	6·31	6·16	5·79478	5·78522
30	307·312	10·2437	0·3404	645·240	450·00	1·4339	0·697	7·43	7·21	5·81376	5·68148
32	357·247	11·0077	0·3439	761·799	512·00	1·4879	0·672	8·57	8·23	5·85488	5·73312
34	401·828	11·8184	0·3476	869·120	578·00	1·5037	0·665	9·76	9·26	5·89248	5·75856
36	456·055	12·6682	0·3519	996·655	648·00	1·5380	0·640	10·83	10·28	5·99080	5·86768
38	514·940	13·5510	0·3567	1134·590	722·00	1·5714	0·636	12·12	12·30	6·00372	6·00088
40	579·283	14·4821	0·3620	1306·073	800·00	1·6383	0·612	13·89	12·90	5·96288	5·90304
42	649·912	15·4741	0·3684	1494·374	882·00	1·6943	0·589	15·69	14·48	5·91300	5·84984
44	726·830	16·5188	0·3754	1696·500	968·00	1·7525	0·570	17·46	16·04	5·93320	5·80800
46	810·020	17·6091	0·3828	1913·415	1058·00	1·8085	0·552	19·17	17·60	5·93620	5·85312
48	899·515	18·7399	0·3904	2145·186	1152·00	1·8621	0·537	21·00	19·14	5·92640	5·98136
50	995·300	19·9060	0·3981	2391·783	1250·00	1·9134	0·522	22·76	20·67	5·99638	5·00380

TABLE B.

Height measured from the Top.	Volume of Masonry to the lineal mètre.	Reduced Thickness.	Ratio of the Reduced Thickness to the Height.	Total Vertical Pressures.	Horizontal Thrusts.	Ratio of the Pressure to the Thrust.	Value to be given to the Co-efficient of Friction for Equilibrium.	Abscissæ of the Curve of the Pressures when full.	Abscissæ of the Curve of the Pressures when empty.	Maximum Pressure to the square centimètre when full.	Maximum Pressure to the square centimètre when empty.
1	2	3	4	5	6	7	8	9	10	11	12
				tons.	tons.					kilos.	kilos.
9	45·00	5·0000	0·5555	90·000	40·50	2·2222	0·4500	1·15	2·50	5·21739	1·80000
11	56·60	5·1454	0·4677	113·200	60·50	1·8710	0·5344	1·25	2·58	5·99655	2·59578
13	70·44	5·4184	0·4168	140·880	84·50	1·6672	0·5990	1·56	2·75	5·99533	0·28171
15	86·78	5·7853	0·3856	173·560	112·50	1·5427	0·6481	1·92	3·00	6·01354	3·81081
17	105·86	6·2270	0·3663	211·720	144·50	1·4652	0·6821	2·35	3·32	6·01631	4·23867
19	127·88	6·7305	0·3542	255·760	180·50	1·4169	0·7057	2·84	3·70	6·00037	4·61308
21	153·02	7·2866	0·3469	306·040	220·50	1·3879	0·7204	3·40	4·12	5·99567	4·94766
23	180·44	7·8886	0·3429	362·880	264·50	1·3719	0·7288	4·03	4·59	6·00104	5·26989
25	213·32	8·5328	0·3413	426·640	312·50	1·3652	0·7324	4·74	5·09	5·99992	5·58169
27	248·84	9·2162	0·3413	497·680	364·50	1·3653	0·7324	5·53	5·63	5·99683	5·88712
29	288·44	9·9462	0·3429	579·985	420·50	1·3792	0·7251	6·47	6·42	6·00229	5·99072
31	332·52	10·7264	0·3460	674·235	480·50	1·4031	0·7126	7·57	7·39	6·01028	5·99637
33	381·42	11·5581	0·3502	780·250	544·50	1·4329	0·6978	8·81	8·47	5·99629	5·99664
35	435·36	12·4888	0·3553	898·690	612·50	1·4672	0·6815	10·13	9·65	5·99890	5·97899
37	494·62	13·3681	0·3613	1030·335	684·50	1·5052	0·6643	11·56	10·93	6·00256	5·96272
39	559·38	14·3130	0·3677	1174·100	760·50	1·5438	0·6477	13·06	12·22	5·97624	5·99464
41	629·98	15·3653	0·3747	1333·240	840·50	1·5862	0·6304	14·67	13·65	5·98226	5·99696
43	706·70	16·4348	0·3822	1507·795	924·50	1·6039	0·6131	16·38	15·16	5·97236	5·99696
45	789·84	17·5520	0·3900	1698·585	1012·50	1·6775	0·5960	18·20	16·77	5·98106	5·99716
47	879·70	18·7170	0·3982	1906·430	1104·50	1·7260	0·5793	20·11	18·48	5·97802	5·99909
49	976·60	19·9306	0·4067	2132·190	1200·50	1·7760	0·5630	22·12	20·27	5·98188	6·00268
51	1080·00	21·1941	0·4155	2377·295	1300·50	1·8279	0·5470	24·27	22·18	5·99596	6·00160

TABLE C.

Height measured from the Top	Volume of the Masonry to the lineal mètre.	Reduced Thickness.	Ratio of the Reduced Thickness to the Height.	Total Vertical Pressures.	Abscissæ of the Curve of the Pressures when full.	Abscissæ of the Curve of the Pressures when empty.	Maximum Pressure to the square centimètre when full.	Maximum Pressure to the square centimètre when empty.
1	2	3	4	5	6	7	8	9
				Fig. 2242.				
26	233·61	8·9850	0·3455	467·220	5·20	5·18	5·98493	6·00617
28	266·94	9·5335	0·3404	540·500	6·21	6·14	5·87128	5·79687
30	307·00	10·2333	0·3411	627·720	7·32	7·10	5·88208	5·39772
32	351·55	10·9859	0·3433	724·420	8·45	8·04	5·86224	5·82776
34	400·59	11·7820	0·3465	830·580	9·53	9·05	5·96656	5·93560
36	454·18	12·6161	0·3504	946·490	10·65	10·03	5·99930	6·00100
38	510·99	13·4471	0·3538	1034·740	11·57	11·14	5·07080	5·96539
40	569·82	14·2455	0·3561	1171·540	12·35	12·13	5·38948	5·97094
42	630·67	15·0159	0·3575	1301·700	13·31	13·12	5·28036	5·95388
44	693·54	15·7622	0·3582	1442·280	14·09	14·01	5·53184	5·99196
46	758·43	16·4876	0·3584	1587·580	14·82	14·86	5·63808	5·98260
48	825·34	17·1945	0·3582	1737·620	15·51	15·67	5·90902	5·98752
50	894·34	17·8868	0·3577	1892·525	16·19	16·47	6·00268	6·00148
				Fig. 2243.				
39	556·16	14·2605	0·3656	1165·255	12·75	11·99	5·99075	6·00344
41	620·20	15·1268	0·3689	1307·960	13·90	13·08	5·99693	5·99972
43	686·88	15·9739	0·3714	1457·515	15·01	14·14	5·99999	5·99435
45	756·36	16·8080	0·3735	1614·005	16·12	15·18	6·00164	5·99862
47	828·84	17·6349	0·3757	1778·865	17·24	16·24	5·99794	6·00128
49	904·48	18·4587	0·3927	1952·235	18·38	17·31	6·00044	5·99788
51	983·48	19·2839	0·3781	2134·000	19·55	18·40	5·99899	6·00040

All the reasons by which we were induced to prefer Fig. 2240 to Fig. 2241 exist in favour of Fig. 2242 against Fig. 2243. The cube of the masonry is 894·34 cubic mètres to the lineal mètre, and it is 945·40 for the second. The surfaces of the facings are respectively 112·90 and 139·50 square

mètres. Admitting the prices given above, the lineal mètre of Fig. 2242 would cost 11003·26 francs, a sum that would be increased 11679·60 francs for Fig. 2243. There would thus be a saving of 676·34 francs in favour of the former, and this saving would actually be greater by reason of the difference which would necessarily exist in the prices of the masonry of the facings. We are thus led to believe that the profile represented by Fig. 2242 is the best.

Comparing the price by the lineal mètre of Fig. 2282 with that of Fig. 2283, we find that the latter exceeds the former by 1227·62 francs. We see from this that the small breadth of the

2282.

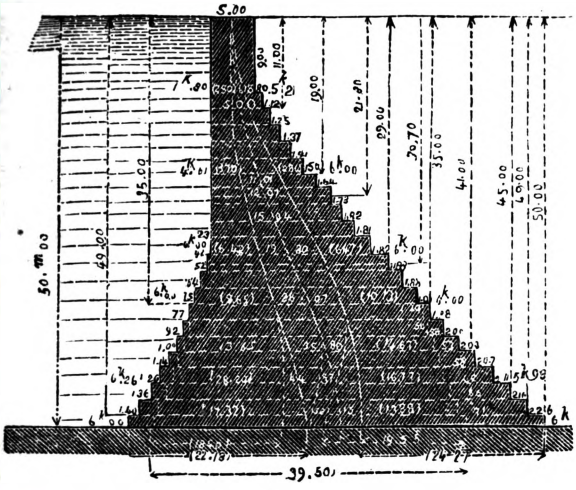

2283.

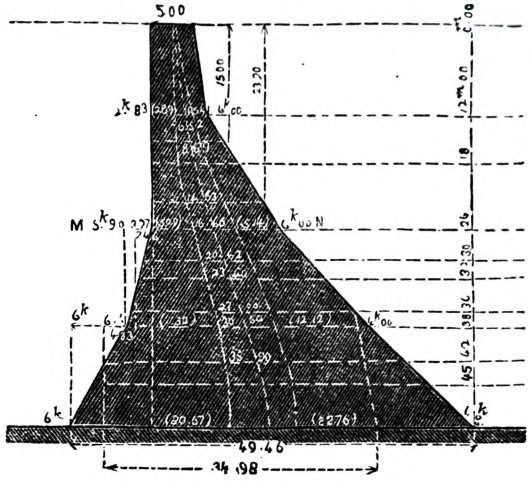

valley of the Furens enables us to reduce the cost by the lineal mètre of barrage by about one-tenth without in any degree diminishing the stability of the structure. See BARRAGE. DOCKS. DRAINAGE. EMBANKMENTS. GRAVITY. LOCKS. PRESSURE, *Centre of*. WATERWORKS. WEIRS.

DAMPER. FR., *Registre;* GER., *Rauchschieber;* ITAL., *Registro;* SPAN., *Válvula atemperadora.*

See BLAST FURNACE. BOILER, p. 390. CHIMNEY, *registers*, p. 960. FURNACES. STATIONARY ENGINES.

DASH-POT. FR., *Appareil de choc;* GER., *Stossapparat;* ITAL., *Ammorzatore a stantuffo latino;* SPAN., *Cilindro para amortiguar choques.*

See BRAKE, p. 621. CAM, p. 905.

DATUM-LINE. FR., *Plan di niveau;* GER., *Grund oder Standlinie;* ITAL., *Livello;* SPAN., *Plano de comparacion.*

A datum-line is the horizontal or base line, from which the surface points are measured or reckoned in the plan of a railway. See A. P.

DEAD-CENTRE. FR., *Point mort;* GER., *Todter Punct;* ITAL., *Punto morto.*

A dead-centre, or dead-point, is either of the two opposite points in the orbit of a crank, at which the crank and the connecting-rod lie in the same straight line. See ALGEBRAIC SIGNS, p. 42. LOCOMOTIVES. MARINE ENGINES. SLIDE-VALVES. STATIONARY ENGINES.

DERRICK. FR., *Martinet;* GER., *Dirk oder Piekfall;* ITAL., *Gru;* SPAN., *Grua.*

See LIFTS. HOISTS and ELEVATORS.

DETAILS OF ENGINES. FR., *Pièces des machines à vapeur;* GER., *Einzelne Theile einer Maschine;* ITAL., *Parti delle macchine vapore;* SPAN., *Piezas de máquinas.*

There are many minor contrivances and mechanical appliances attached to steam-engines that require detached and particular investigations both with respect to mechanical arrangement and philosophical investigation. The *details* respecting such subjects we place under the heading *Details of Engines.*

Feed-Pumps.—Simple Forcing-Pump.—The pumps which are in general use, and which are worked directly by the engine, are similar to that of which Fig. 2284 is a transverse section.

A feed-pump acts by overcoming the pressure inside the boiler. This circumstance, together with the small diameter which the pump has in nearly all cases, has led to the adoption of the solid piston, called a *pump-plunger*, or simply *plunger*. (See AIR-CHAMBER, p. 34.) This is the system employed when a high pressure has to be overcome.

The pump represented in Fig. 2284 consists of a cylinder A of cast iron or of bronze in which works the piston or plunger B. This cylinder is furnished in its upper part with a stuffing-box through which the plunger works. Below the stuffing-box the diameter of the cylinder is sufficiently large to allow the plunger to work freely. The example which we give in Fig. 2284 possesses the peculiarity of being cast in one piece; this is an arrangement that is often adopted, especially when the force exerted is not great. The lower portion of the pump consists of a box or chamber C of an oblong form, the interior of which is divided into two compartments *b* and *b'*, communicating with the chamber C by means of the clack-valves D and D', called respectively *sucking* and *forcing valves;* the channels *d* and *d'* connect these valves with the pipes E and E', and with the inner chamber.

It will be seen from Fig. 2284 that in the arrangement adopted for forcing-pumps, the interior of the pump A communicates, on one side, by a lateral opening *c* with the compartment *b*, which

contains the sucking-valve D, and, on the other, by the lower orifice c with the under-side of the forcing-valve D'. And in the same way the suction-pipe E communicates directly by the channel d with the lower side of the valve D, whilst the pipe E', which leads to the boiler, communicates by the channel d', on the upper side of the valve D', with the second compartment b'.

It will be seen from the foregoing explanation that when the plunger rises a vacuum will be formed in the chamber C, and the pressure of the atmosphere upon the reservoir will, consequently, force the water in through the pipe E by raising the valve D. When the plunger descends, on the contrary, the force exerted upon the water will close the valve D, and raise the other D', through which the water will rush by the pipe E' into the boiler.

2284.

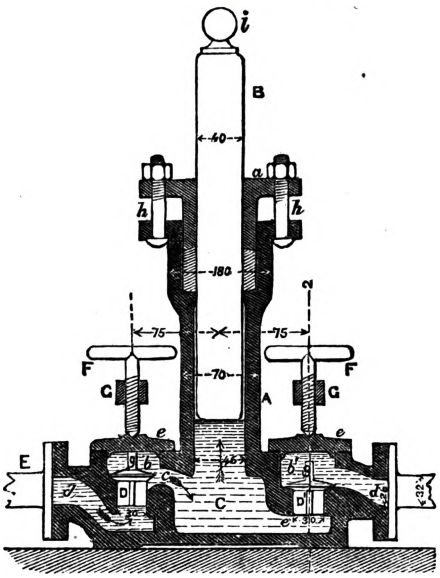

2285.

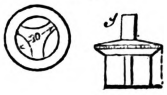

2286.

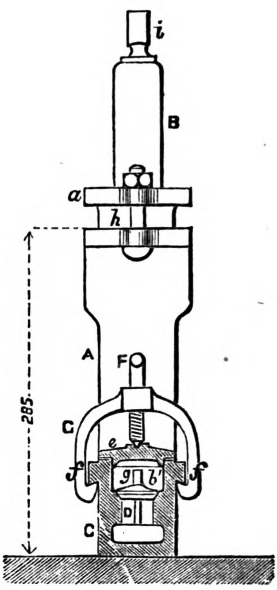

The following details of the example we have chosen will be of use. The form of the valves will be seen from Fig. 2285, which represents one of them in elevation, and as seen from below. They consist of a flat disc with a conical edge to fit the seat, and a cylindrical plug hollowed or fluted on three sides to allow a passage to the water. These valves are adjusted to cylindrical orifices, the upper side of which forms the clack-seat; these orifices are concentric with the compartments b and b', which are also circular and open at the top, to allow the introduction of the valves. When the pump is at work, both of these compartments are hermetically closed by an iron lid e fitting upon a leather or lead washer. As it is necessary to be able to examine the valves easily, the lids e are held down by a single hand-screw F working through the stirrup-piece G, affixed by hooks $f f$ to the body of the pump. This arrangement will be easily understood by referring to Fig. 2286, which gives a side view of the pump through a transverse section 1—2 of the clack-box b'.

It will be noticed that each valve has, on its upper side, a short rod g; this rod has several uses. It serves as a handle to turn the valve, or to take it out of its seat; but its chief use is, when the pump is working, to prevent the valve from rising out of the cylindrical aperture in which it moves.

The stuffing through which the plunger plays has nothing remarkable but its simplicity. It consists of hemp, well greased and kept tight around the plunger by the collar a and two belts $h h$. This collar is rarely provided with a lubricating cup, as the stuffing is usually greased with tallow, and, as the apparatus works at relatively low temperatures, the grease lasts a considerable time.

We use the term "relatively" because the feed-water is usually warm. But, if the temperature exceeds 30 or 40 degrees Cent., the pump will work badly; and if it be required to heat the feed-water by means of the waste heat, it will be better to effect this operation between the pump and the boiler, that the former may work with cold water only.

The kind of pump which we have described may be of gun-metal or of cast iron. With the exception of the valves, which ought to be of gun-metal or bronze on account of their delicate functions, all the parts should be of the same material. It is the opinion of many experienced men that the presence of different metals in contact with water, the action of which is always in some degree acid or saline, gives rise to a galvanic current which accelerates the oxidation of the metal. We do not assert the truth of this opinion; we mention it as one worthy of attention and requiring further research.

In the case of engines of direct action, feed-pumps are usually worked by means of a circular eccentric placed upon the shaft. A connecting-rod joins the eccentric and the pump-plunger. According to the arrangement shown in Figs. 2284 and 2286, the pump is fixed vertically; but it may be horizontal or inclined, with a slight alteration in the position of the clack-boxes, as we shall have occasion to show later.

Sometimes the feed-pump is connected directly with the motion of the piston of the air-pump,

when there is a condenser; but in that case it is necessary to reduce the diameter of the plunger, because the stroke is relatively considerable. It is true that with the eccentric we may fall into the opposite fault, when we do not wish to give it exaggerated dimensions. This latter condition is, however, more in accordance with the ordinary motion of a pump, which, except in the case of locomotives and engines driven at a high rate of speed, is usually slow. When applied to beam-engines, the pump is worked from the beam, and may have a greatly reduced stroke.

The work of a feed-pump should, like the evaporization, be continuous, but, on account of the difficulty of making it correspond exactly with the loss in steam, it is necessarily intermittent. Besides, as a pump is liable to irregularities, it is needful to give it greater power than theory demands, providing, at the same time, the means of suspending its action at pleasure. This means is furnished by two different methods which do not offer the same advantages.

The first is to put it out of gear, and so to stop it completely. If the mechanism by which this is effected is easily managed, there is no objection to this method.

In the second, the action of the pump is allowed to continue, and the cock in the suction-pipe is partially or wholly closed. This latter method is certainly not the best, for if the cock be closed the pump moves in a vacuum, and if there be the smallest fissure the air will enter. But what is of greater importance is, that this regulating by means of cocks, which are more or less closed while the plunger continues its motion, gives occasion for mistakes which may result in bursting the pipes or some portion of the pump. We have ourselves witnessed a fact of this kind. The connecting-rod which worked the pump belonging to a powerful beam-engine was found to have been twisted, notwithstanding the great diameter of the rod, which was not less than from 4 to 5 centimètres. An accident of this kind must be attributed to the closing of a cock in the forcing-pipe, a circumstance which, in the case we have cited, was rendered more probable by the fact that the driver had the command of cocks on the boiler.

Many methods have been proposed for regulating the feed by means of a pump, by the level of the water in the boiler; few have, however, been adopted in practice.

But whatever method be adopted, accidents may be prevented by providing the pump with a safety-valve. A safety-valve not only prevents accidents, but it may serve to clear the pump of the air which the water always brings in with it, and which is one of the most frequent causes of stoppage. It is well known that when the pump raises the water to a considerable height it produces a corresponding vacuum which disengages the air from the water. The air thus introduced into the pump, ascends to the upper portion, and gradually accumulates till its pressure hinders the sucking-valve from opening. This can be got rid of only by opening a cock placed for this purpose on the pump or by lifting the safety-valve when there is one.

The pump, Fig. 2287, belongs to a two-cylinder engine. It differs from the preceding in the arrangement of the clack-boxes and in being provided with a safety-valve.

2287.

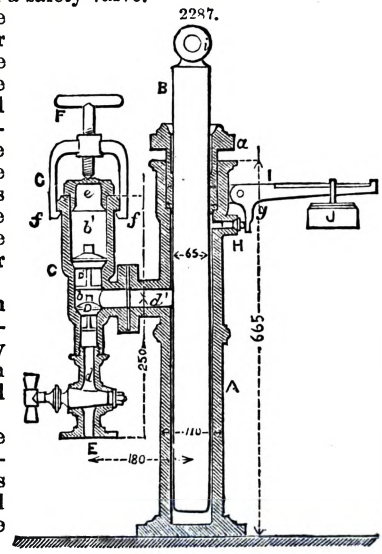

The clack-box is a kind of tube G, independent of the body of the pump and communicating with it by a tubular passage. The inside of the tube C is constructed to receive the two valves D and D′, which are, in this case, one above the other, and unequal in size, as they must be introduced through the same aperture *e*. The suction-tube is in connection with the cock E below the clack-box. A pipe in the portion *b′* of the latter provides the communication with the boiler. When the pump-plunger ascends, the water flows through the passage *d*, forces up the valve D, and enters the pump by the passage *d′* between the two valves. When the plunger descends, the valve D′ is forced up, and the water escapes from the compartment *b′* into the boiler.

It is clear that this arrangement is inferior to those in which the valves are quite free of each other, as in the preceding example. To examine the lower one, it is necessary to remove the upper, and the flow of the water, which changes its direction at each stroke, seems less rational than in the pump represented in Figs. 2284 and 2286.

We come now to consider the safety-valve to which we have alluded. This valve H, of small dimensions, is situated in the upper portion of the pump where the air is likely to accumulate. The valve is loaded by a horizontal lever I, having a projecting piece *g* corresponding to the valve, to which it transmits the action of the weight J.

This valve, which is absolutely necessary to prevent accidents contingent on the ill-timed closing of a cock, or any cause which may hinder the flow of water into the pump, serves also to give egress to the air which is continually accumulating. The conditions of the equilibrium of this valve, as in the case of safety-valves on boilers, have as a basis the internal pressure. The pump-valve must offer an excess of load over this pressure; indeed, it is clear that it may resist this pressure up to the practical limit of resistance of the weakest portions of the pump.

E. Bourdon's Pump, Figs. 2288 to 2290.—The first example is a horizontal pump applied to the horizontal engines constructed by Bourdon for flour-mills at Odessa. These engines are of 25 horse-power. Fig. 2288 is a vertical section, and Fig. 2289 a transverse section along the line 1—2.

The peculiarity of this pump consists in the construction of the clack-boxes and the valves, the latter being hinged. The main or central portion A is provided with two passages *c* and *c′*, exactly symmetrical and terminating in smooth projections. Upon these projections are fixed, by means of screws, two bronze seats C and C′ which have the curved passages *d* and c^2, and the passages

E and E to which are affixed the suction and the forcing pipes. It is remarkable that, according to the natural play of the valves the passage *d* is in direct communication with the suction-pipe, and the passage c^2 with the channel c', whilst the other channel *c* is in direct communication with the chamber *b*.

2288.

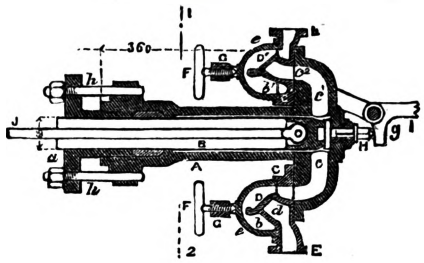

2289.

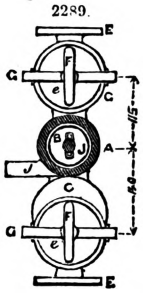

2290.

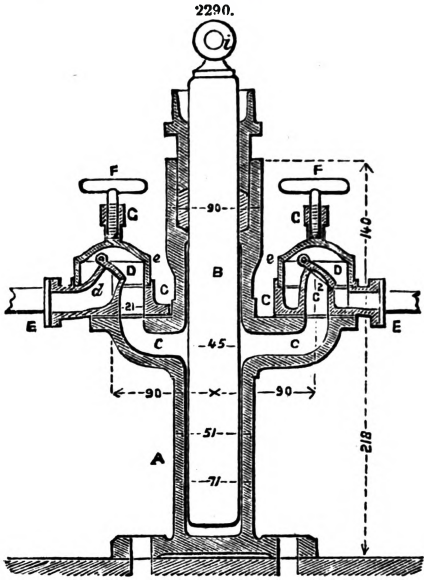

The seats C and C′ are enclosed in bell-shaped covers *e*, forming the chambers or clack-boxes *b* and *b*′; these covers are held in their position by the stirrup-piece G and the screw F. The valves themselves are solid discs fixed by a hinge. It should be remarked, however, that for small dimensions engineers generally prefer the kind described in our first example, which requires less delicate adjustment and which is less liable to get out of order than the hinged valve.

This pump is remarkable for the neatness of its construction and the very rational way in which the water circulates through it, without any sharp angles or changes of direction. The clack-boxes too, being independent of their seats, allow of repairs being easily effected. The body of the pump is of cast iron, but the valves and the boxes are of bronze. With regard to the details of construction, we have to notice that the pump-plunger B is hollow to allow the connecting-rod J, which is jointed to its lower extremity, to work in it; the object of this arrangement being to lessen the length of the whole mechanism without shortening the connecting-rod. This pump is furnished with a safety-valve H of the kind described above. Vertical pumps are fixed by the base; when, as in the present case, they are horizontal, they are fixed by the part *j*, Fig. 2289, which is cast with them. The bolts *h* of the collar differ from those of the other examples in having, in the place of the head, an eye which passes over a tenon of the same form, cast with the pump.

Fig. 2288 represents a vertical pump constructed exactly like the preceding one with respect to the valves and boxes. The various parts are marked with the same letters as in Figs. 2288, 2289. When required to perform the same functions as Edwards' pump, this one is evidently far preferable.

We have an important remark to make relative to hinged valves;—Whatever the position of the pump, the position of the valves must be such that they may rest naturally and of their own weight upon their seat, without any assistance from the pressure developed by the play of the plunger. If this be not the case, the play of the valves, which it is always difficult to keep regular, will be faulty, and the pressure of the water will seldom be sufficient to force them back into their places in time. See PUMPS.

Dimensions of Feed-Pumps.—When we know exactly the volume of water requisite to supply an engine, the determination of the dimensions of the pump is only a matter of simple calculation; but as the power of a pump is not strictly limited to the volume of water which is absolutely necessary, the subject demands some consideration.

Volume.—In most steam-engines, the pump-plunger makes as many strokes as the piston; if the circumstances were the same in all engines, the volumes engendered by the piston and the plunger would be proportional, and we might thence determine the proportions of the feed-pump of low-pressure engines. But as each engine may offer particular conditions, such as length of admission and pressure of the steam, it is more rational to endeavour to discover the weight or the volume of water to which each special set of conditions corresponds.

The quantity of water consumed by a steam-engine may vary from 45 to 9 kilogrammes for each horse-power an hour, not including that which, in all cases but in different proportions, is carried off by the steam, but which must be taken into account when it is required to fix the work of the pump. In the presence of variations so considerable as these, it would seem that we should have to assign to feed-pumps as many different proportions as there were different conditions. But it is possible to reduce the problem to more general terms, by remarking, in the first place, that the circumstances in one and the same engine are much less variable when the steam is not used

expansively than when it is so used; and, in the second place, that in the two cases we may bring under two heads engines with and without condensation.

We may thus lay it down;—

1. That an engine in which the steam is not used expansively and which has no condenser, consumes, as a mean, 10 kilogrammes of water in utilized steam, by the horse-power, an hour.

2. That, for an engine in which the steam is used expansively and to which there is no condenser, the power of which engine may vary as much as $\frac{1}{5}$ of the nominal power, and the specific consumption in steam of which is, on the average, 20 kilogrammes, the pump must be constructed for a higher consumption, namely, about 30 kilogrammes.

3. That, for engines in which the steam is used expansively and to which there is a condenser, the power of which engines varies in a similar degree, and the consumption of which varies from 18 to 9 kilogrammes, the mean being about 15, the pump must be constructed for a consumption of from 22 to 25 kilogrammes, by the horse-power, an hour.

If now we modify these quantities, on account of the imperfect working of the pump, which allows us to reckon upon a real production of only 70 per cent. of the volume theoretically engendered by the plunger, and add to them at first 15 per cent. for the possible quantity of water not evaporated, we arrive at the following conclusions;—

High-pressure Engines without Expansion.—The piston or plunger of the feed-pump should engender, as the sum of the single strokes, a volume equal to $\frac{40 \times 1{\cdot}15}{0{\cdot}7} = 65{\cdot}714$, or about 66 cubic decimètres to the horse-power an hour.

High-pressure Engines with Expansion.—In this case the volume will equal $\frac{30 \times 1{\cdot}15}{0{\cdot}7} = 49{\cdot}286$, or about 49 cubic decimètres to the horse-power an hour.

Low-pressure Engines with Expansion.—For this kind we find as the maximum volume to be given to the feed-pump $\frac{25 \times 1{\cdot}15}{0{\cdot}7} = 41{\cdot}071$, or about 41 cubic decimètres to the horse-power an hour.

These numbers, taken as bases of comparison, enable us to compute the real dimensions of the pump, the volume of which is the quotient obtained by dividing by the number of double strokes an hour.

Suppose, for example, that it is required to find the volume engendered by the piston of the feed-pump of a low-pressure engine with expansion, of 25 horse-power and making 30 revolutions a minute, the pump being driven directly, we have $\frac{41 \times 25}{30 \times 60'} = 0{\cdot}570 = 570$ cubic centimètres.

The piston of the feed-pump of M. Bourdon's engine which corresponds to the foregoing data, engenders, by each single stroke, a volume of 630 cubic centimètres.

The work of a feed-pump being intermittent, the supply of water while the pump is at work must be greater than the consumption. The numbers given above are, therefore, only bases, since the capacity of a pump may be increased by this single fact. Sometimes its dimensions are greatly exaggerated in order to be able to obtain from it, in case of need, an excess of work. This is a very pernicious method, and it ought never to be adopted.

Diameter and Length of Stroke.—The diameter and the length of stroke are only an arithmetical deduction from the volume found for a single stroke, and, consequently, have no other interest than the variable relation which may exist between them. The pump-plunger is often driven directly, and gives the same number of strokes as the piston. In this case the length of stroke must be reduced in order that the speed may not exceed a certain limit, beyond which the performance of the pump is bad and the resistances considerable. In fine, it may be said that the diameter and the length of stroke of a pump-piston depend absolutely upon the arrangement of the mechanism, and have no relation that may be established *a priori*. We have only to remark that the speed of the piston should never exceed 50 centimètres a second, and the number of pulsations 100 a minute. For an engine turning at a higher rate of speed than this, a retarded motion should be given to the pump.

Sections of the Valves and the Suction and Forcing Pipes.—In many cases, and especially in the case of engines in which the circumstances are nearly the same, the section of the pump-valves is determined proportionally to the nominal horse-power. It is in this way that we find the section of the injection-tube of the condenser, by taking as fixed bases the height of suction, the counter-pressure, and the greatest specific quantity of water to be injected, for, in this case, the total quantity of water becomes proportional to the nominal power. An analogous method would be applicable to the suction-tube of the feed-pump if the water were free to enter the pump with all the speed due to the vacuum caused by the suction. But it can enter only in virtue of the space allowed by the plunger, the speed of which is, as we have seen, very restricted; we must, therefore, take this speed as a starting-point, employing as a basis the mean volume of water assigned above to the three different kinds of engines respectively.

It may be admitted that the speed of the water through the suction-tube is, on the average, $0^{m}{\cdot}50$ a second; but as the play of the pump is intermittent, we may put it at a continuous rate of $0^{m}{\cdot}25$ a second. Applying this method to the three kinds of engines, the volumes of water for which have been calculated above, we obtain the following results;—

High-pressure Engines without Expansion.—We have seen that the feed-pump of this kind of engine ought to supply 40 kilogrammes, or litres, of water to the horse-power an hour, plus 15 per cent. for the water carried off by the steam. The section of the suction-valve of this pump, according to this, is equal to the dimensions expressed in square decimètres, $\frac{40 \times 1{\cdot}15}{2{\cdot}5 \times 3600} = 0^{d}{\cdot}00511$, or about $\frac{1}{2}$ a square centimètre to the nominal horse-power.

High-pressure Engines with Expansion.—Operating in the same way for this second kind, we find as the section of the suction-valve $\frac{30 \times 1{\cdot}15}{2{\cdot}5 \times 3600} = 0{\cdot}00383 = 0{\cdot}383$ square centimètre to the horse-power.

Low-pressure Engines with Expansion.—We obtain in the same way,

$$\frac{25 \times 1{\cdot}15}{2{\cdot}5 \times 3600} = 0{\cdot}00319 = 0{\cdot}319 \text{ square centimètre.}$$

These proportions are in accordance with those adopted in practice, though they cannot be regarded as *invariable rules;* they should be used as a point of comparison, in order to be sure of not going below their value, which, on the contrary, may be exceeded without inconvenience, if the general proportions of the pump will allow it.

To give our readers a clear apprehension of the method of applying these proportional bases, we will give an example.

Example.—What ought to be the least section of the suction-valve of the feed-pump, applied to a low-pressure engine, with expansion, of 25 horse-power.

The specific section being 0·319 square centimètre, we find for the power proposed,

$$0{\cdot}319 \times 25 = 7{\cdot}98 \text{ square centimètres.}$$

This section corresponds to a circle of about 32 millimètres in diameter, which is the size to be given to the suction-tube; as to the valve itself and its seat, it should have dimensions which give an equivalent effective orifice, on taking into account its nature and arrangement. We repeat that an advantage will be gained by increasing the dimensions thus found, when the construction will allow it.

It is supposed in the preceding rule that the height of suction is always much less than that which would allow the water raised only an initial velocity, in the ascension pipe, of 50 centimètres a second.

Taking a height of 5 mètres as a maximum, the water would have, on this condition, a tendency to escape through the orifice of the valve with a velocity always equal to

$$v = \sqrt{19{\cdot}62 \times (10^{m}{\cdot}33 - 5^{m})} = 10^{m}{\cdot}21 \text{ a second.}$$

It is customary to give to the forcing valve and pipe the same dimensions as to the suction valve and pipe, in which case the water acquires through them the same mean velocity. We have only one objection to make to this, namely, the pressure being much greater, and the pipe being often of considerable length, the resistance is greatly increased, and thus the chances of rupture are multiplied. Consequently, while giving to the forcing-valve the same dimensions as to the other, it would be prudent to increase slightly the diameter of the pipe, especially if it be long, in which case the resistance is augmented. It must not be forgotten, too, that the section of these passages is reduced in course of time by the deposit of matter brought in by the water, and which is suspended in it, or in a state of calcareous dissolution.

Of even greater importance is the avoiding of sharp angles, almost doublings, which are sometimes given to this kind of pipe under the pretext of hiding them in the masonry in which they are built. By such faults as these, the section of the forcing passage is often so much reduced that the slightest accidental obstruction may cause the bursting of the pipe, or of some portion of the pump.

Self-acting Feed Apparatuses.—Feed-pumps rarely work with sufficient regularity to render it unnecessary to watch their performance. With a pump of small dimensions, without a reservoir of air, and moving at a considerable speed, it will often happen that the valves either get out of their seats or close imperfectly, this latter circumstance arising from the interposition of pieces of gravel brought in by the water. Often, when the pump has been stationary for a considerable time, it will not work till the clack-boxes have been filled with water.

This uncertainty in the working of pumps, added to the difficulty of making their production correspond with the evaporization, which may be increased without accelerating the speed of the engine and the pump, has led engineers to seek methods of regulating the supply of water by the level of the water in the boiler. One method of effecting this offers itself almost naturally to the mind.

Suppose, in communication with the boiler, a tube of sufficient height to put the water it contains in equilibrio with the pressure of the steam. If this column of water be in communication with a reservoir by means of a floating valve, it is clear that this column, having a tendency to sink with the level of the water in the boiler, will supply at its base the volume necessary to maintain it while receiving an equal quantity from the reservoir above. Here, then, we have an apparatus that would evidently work well in theory.

But this tube must have in height as many times 10·33 mètres, minus one, as the steam has atmospheres; consequently, even for a fixed high-pressure engine, the method is almost impracticable. It has been employed, however, but only when the pressure has been slightly above that of the atmosphere; in this case the column of water may be of a somewhat limited height. We will give an instance of one of these, before we attempt to discuss some of the inventions for high-pressure engines.

Fig. 2291 represents the apparatus applied to a boiler; it is the same as that applied to most low-pressure engines on Watt's system, and is composed of a column A, of about 3 mètres in height, fixed to the boiler B with which it is in free communication by the tube C. The water in it, consequently, rises to a height corresponding to the excess of the pressure of the steam above that of the atmosphere.

The pressure in these boilers being at 1·2 atmosphere, or about $\frac{1}{5}$ above the surrounding atmosphere, it follows that the column of water will stand at a height of about 2 mètres above the

level in the boiler, or about the fifth of a column of water in equilibrio with a pressure of one atmosphere.

This column is terminated in its upper portion by a cistern D, the bottom of which is formed of a piece E, shaped like a reversed funnel, the use of which we will explain farther on. This bottom is pierced with a small aperture provided with a conical valve or plug F, suspended by a rod *a* to a lever G resting on the side of the cistern; one of the ends of this lever is attached to a rigid rod *b* entering the boiler through a tube H which plunges freely into the water; this supports a float I of a circular shape on account of the tube H, and of a density greater than that of the water. The other end of the lever G supports a counterpoise *c*, to balance the float. It must be remarked that the tube H, in which the water of the boiler rises to the same height as in the principal column, has no other use than to render a stuffing-box for the passage of the rod *b* unnecessary.

2291.

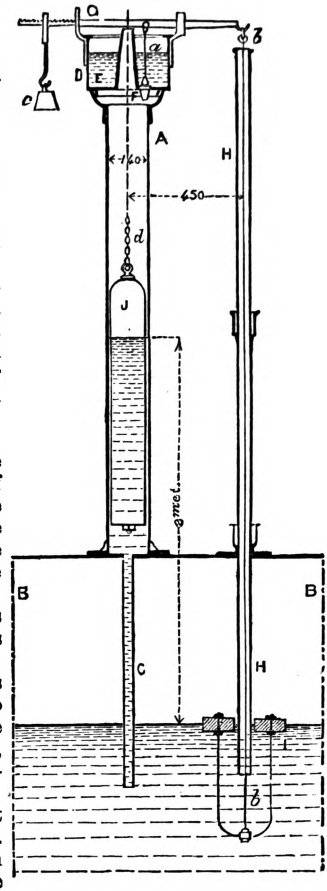

When the water-level in the boiler is at its normal point or above, the float I will not descend, and the valve F being held in its seat, the water in the cistern D cannot get into the column A. If the level sinks, on the contrary, the float follows it and lifts from its seat the valve F which allows the water in the cistern to escape. This water being added to that of the column which is in equilibrio with the pressure, and the height of which can vary only with the pressure, it follows that a quantity of water equal to that escaping from the cistern enters the boiler and raises the level to its normal point. The height being restored, the float ascends and closes the valve F.

This apparatus may be connected with the register of the chimney in the following manner. A float J upon the column of water, is attached to the chain *d* which passes through the orifice in the piece E, and is fixed at the other end to the register. The column in the tube A varying in height with the pressure in the boiler, the register will be opened or closed by the fall or rise of the float J.

Fig. 2292 is the pump belonging to the same engine, and is used to lift the water to the apparatus described above. It differs from other feed-pumps in being *lifting* instead of forcing.

This pump has only a small force to overcome, since its piston supports only the weight of a column of water equal to the vertical distance from the pump to the feed-head, a distance of about 5 mètres, or ½ atmosphere instead of 5 and upwards, which the force-pumps of high-pressure engines have to overcome.

The body of the pump A is open at its lower extremity. It is bolted to the box B in which are the clack-valves D and D′. The suction-valve D is placed over a pipe C in communication with the tank receiving the hot water from the condenser. The box of the second valve D′ communicates by a tubular passage E with the pipe leading to the feed-head.

2292.

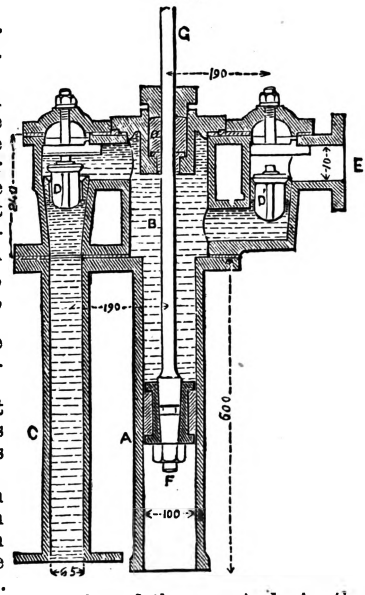

This kind of pump is now little used, because the water is sent directly into the boiler, and for this purpose a forcing-pump is better adapted.

Apparatus for High-pressure Engines.—We have shown above the principle of self-acting apparatus, and we have seen that it may be easily realized when the pressure in the boiler exceeds but little that of the atmosphere. But for higher pressures other means have been resorted to, the simplest of which we will explain. It is right to add that these various arrangements have been attempted more especially in the case of boilers that are not designed to furnish steam to an engine, as in this latter case a pump may be used, and unless the method of the pump could be improved upon, there was no necessity for resorting to other means.

There is also apparatus working in conjunction with the pump, and designed to regulate the quantity of water introduced, by the level of the water in the boiler.

Feeding-vessel.—This very simple apparatus works without a pump and under all pressures; it is employed for boilers used for heating purposes, or for any purpose where steam is required without an engine.

It consists in principle, as may be seen from Fig. 2293, in placing above the boiler a vessel A containing a certain volume of water, which vessel may be put in communication with the boiler B, by two pipes C and D, one entering above the surface of the water in the vessel A, and the other below.

The first pipe C goes from the steam-chamber to the upper portion of the receptacle A; the

second D goes from the lower portion of the same vessel to near the level, and in some cases below the level of the water in the boiler. These two pipes are provided with cocks *a* and *b*; when it is required to introduce water into the boiler, the first cock *a* is opened, and the steam entering the vessel A, exerts its pressure upon the water. The second cock *b* is now opened, and both surfaces being subjected to an equal pressure, the water will flow from the vessel into the boiler in virtue of the difference of height of the two levels. When sufficient water has flowed into the boiler, the cocks are closed and the feeding suspended.

It will be remarked that this operation requires the intelligent care of a man. But it may be made self-acting by means of a contrivance based upon the principle of floating valves, which is sometimes done.

The lower end of the pipe D may be above or below the level of the water in the boiler; it is, however, preferable to place it below to avoid the boiling caused by the steam which would endeavour to force itself into the pipe if it opened into the space occupied by the steam. But in this case the cocks must be carefully managed; for if the cock *b* were opened before the pressure had fully exerted itself in the vessel A, the water from the boiler would rush up into it, instead of the opposite effect being produced.

We have supposed that the feeding bottle was itself supplied with water by hand, before setting it in operation, and for a determinate time. But this vessel may be made to feed itself in the following manner;—

A pipe provided with a cock puts it in communication with the reservoir; then a jet of steam is let into the vessel, which steam, by first expelling the air, and then being itself condensed, causes a vacuum which the water in the reservoir will rush up to fill. Of course, this method is practicable only when the vessel is not situated at too great a height above the reservoir.

2293.

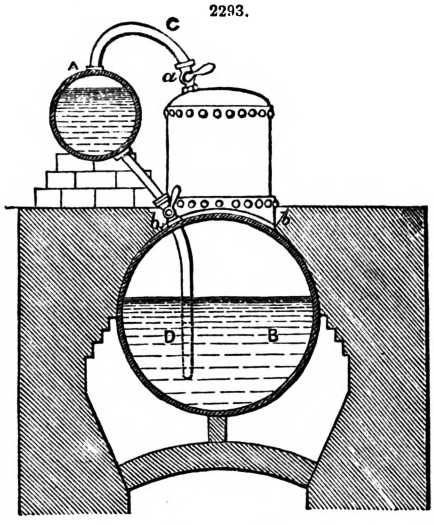

2294.

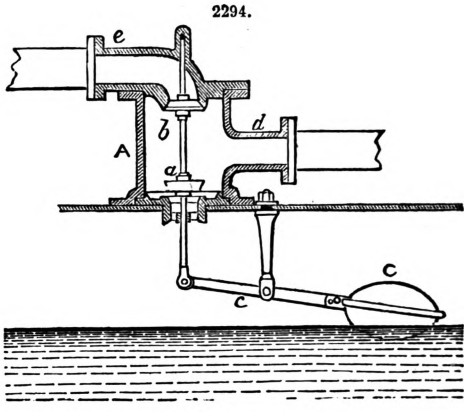

Regulator working in conjunction with a Pump.—The apparatus represented in Fig. 2294 has also been employed to regulate the introduction of the feed-water supplied by a pump working continuously. It consists of a cylindrical box A of cast iron or of bronze, placed upon the boiler B with which it communicates by the valve *a*, the rod of which is connected with a float C fixed to one end of the lever *c*. This box is closed at the top by a tubular cover *e*, the inner orifice of which is provided with a valve *b*, upon the same rod as the valve *a*, but turned in the opposite direction, so that one closes when the other opens.

The box A is in free communication with the feed-pump from which the water enters by the tubular passage *d*, situated between the two valves. The pipe *e* takes the water back to the reservoir.

When the valve *a* rests upon its seat, the other will be withdrawn, and the box *a* will be in communication with the pipe *e*. In this position, the water which is constantly supplied by the pump will not enter the boiler, but, passing through the valve *b*, will pass back to the reservoir through the pipe *e*. If, on the contrary, the valves are in the opposite position, the water will flow only through the valve *a*, and will thus reach the boiler.

If we could rely upon the regular working of the float, such an apparatus would be perfect. But any derangement of its mechanism, capable of hindering wholly or in part the play of the valves, is of serious consequences, since the several parts are out of sight, and to remedy the fault it is necessary to stop the boiler and to allow it to become sufficiently cool.

Higginbotham and Gray's Apparatus.—This apparatus is founded upon the principle of the contrivance called a cataract, which, as is well known, utilizes a constant flow of water to produce intermittent actions by a cock or a valve.

It consists of a box A, Fig. 2295, placed on the top of a piece with two pipes B and C which descend into the boiler. The pipe B descends nearly to the bottom of the boiler, and communicates with a separate compartment D, inside the box A. The communication may, however, be intercepted by a clack-valve *a* closing from the force of an upward pressure. The other pipe C opens into the space occupied by the steam, and ascends by a continuation C′ in the box A, or

rather in the interior of the compartment D, with which it communicates at the top when the other valve *b*, which opens downwards, is lowered.

Before explaining the action of the cataract, the work of which is to close or open this latter valve, let us see more in detail the arrangements which enable the water to enter the boiler.

The box A is filled with water which may pass in part into the compartment D, by raising a third valve *c*, shown in the figure by dotted lines.

2295.

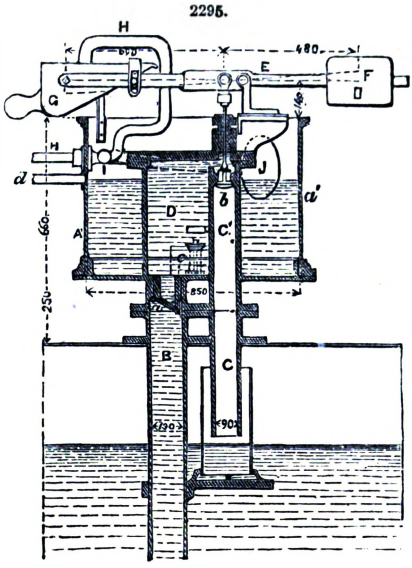

Suppose this valve closed, the valve *b* open, and the compartment D partly filled with water. The steam introduced through the passage C will enter the compartment D, and exerting its pressure upon the water therein contained, the same effect will be produced as that explained above in reference to the feed-bottle; both surfaces being equally pressed, the water will flow into the boiler by opening the valve *a*.

If now the valve *b* be brought down upon its seat, the steam which occupied the upper portion of the compartment D, being cut off from its source, will be condensed, leaving a vacuum, the double effect of which is to close the valve *a* by the predominant pressure in the boiler, and to open the bottom valve *c* by the action of the atmosphere which presses constantly upon the water in the receptacle A. A portion of the water contained by the receptacle A will therefore pass into the compartment D.

To complete the description of this ingenious contrivance, it remains only to explain the method by which the valve *b*, the prime mover of the whole system, is opened and closed at the proper times.

This valve *b* is connected with the balance E, having its point of oscillation above the compartment D. One end of the balance is provided with a weight F, and the other supports a kind of box G, triangular in section, and capable of outweighing, according to its point of suspension, the end F. A pipe H leading from a reservoir pours its water into the box G. The pipe has a cock I, connected with the arm of a float J, which rises and sinks with the level of the water in the receptacle A.

If we take the mechanism in the situation in which it is represented by the figure, the water flows into the vessel G, which is now outweighed by the weight F, a state of things that keeps the valve *b* closed. But the flow through the pipe H continuing, the vessel G is soon sufficiently filled to overcome by its weight the counterpoise F and the pressure of the steam against the valve *b*. It therefore sinks, carrying with it the lever E, and giving rise to several simultaneous actions, which, for the sake of perspicuity, we will indicate separately.

1. The valve *b* is removed from its seat, to allow a passage of water into the boiler, under conditions described above.

2. The vessel G strikes against the edge of the receptacle A, and pours into it the water which it contained.

3. The water thus received into the receptacle raises the level, and with it, of course, the float J, which, in its turn, closes the cock I and stops the flow of water through the pipe H.

4. The vessel G being empty is outweighed by the counterpoise F; the lever E ascends; the valve *b* is brought up to its seat, and the work of feeding the boiler is suspended.

From what has already been said, it will be seen that the closing of the valve *b* causes the water to pass from the receptacle A into the compartment D. The level in A being thus reduced, the float J sinks, the water again flows through the pipe H, and the same actions are repeated.

With respect to the length of the intervals between these various occurrences, we see that the time during which the valve *b* is open is fixed, since it can last only while the vessel G is pouring out its contents. Consequently, the introduction of water into the boiler is effected in equal quantities. And the interval between each of such introductions must evidently depend upon the time required to fill the vessel G. Thus the total quantity of water furnished may be varied by means of a cock or other contrivance upon the pipe H.

It is important to remark, that if the level of the water in the boiler rises above its normal point, on account of a slower production of steam, or by an excess of supply, the introduction of a fresh supply will cease as soon as the level has reached the lower end of the pipe C.

It is evident that in this situation, the steam being unable to reach the top of the compartment D, no flow of water can take place between it and the boiler; but the play of the vessel G still continuing, the water thus supplied to the receptacle A flows off through a pipe *d* provided for this purpose.

This apparatus is suited to all pressures; but it does not seem capable of utilizing feed-water of a high temperature relatively to that of the steam, the condensation of which, in the compartment D, should, in the matter of rapidity, be in a direct ratio with the play of the vessel G, to allow the proper introduction of the outer water into this compartment D.

Self-acting Feed Regulator.—This invention is a very ingenious one and likely to produce safe results.

Fig. 2296 represents one of the many arrangements of which this apparatus is susceptible.

The inventor characterizes the principle as "a volume of water in a changed medium;" that is, taken from the surrounding atmosphere and introduced into a new medium in which the inner pressure of the boiler prevails, a medium from which the water may freely flow into the boiler as

that therein contained becomes exhausted; the fluctuations of the level in the boiler thus being the motive and regulating cause of the supply.

As shown by the figure, the instrument consists of a bronze case B, fixed on the outside of the boiler, in which case moves a cylindrical piece A passing through it. This piece, which forms a kind of register, is the *measurer* or moving receiver of the apparatus; it is subjected to a rectilineal, reciprocating motion, like a piston or a valve the functions of which it discharges simultaneously.

2296.

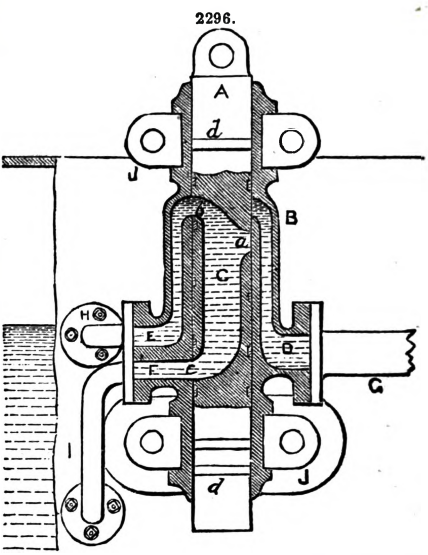

On each side of the central aperture in which the register works there are two channels D and E opening into it. D communicates with a pipe G leading to the reservoir of feed-water which is placed a little above the apparatus; E communicates with a tube H opening directly into the boiler, *at the height at which the level is to be maintained.*

A third channel F communicates with a pipe I which opens into the boiler at a certain distance below the normal level.

The piston-valve A is provided with a cavity C pierced with three orifices *a*, *b*, and *c*. The orifice *a* is on the same side as the pipe D from the reservoir; *b* and *c* are on the opposite side and at a distance apart equal to that of the orifices of the channels E and F, with which they must correspond when the piston is in the lower position, whilst in the opposite position the orifice *a* coincides with the mouth of the channel D.

The reciprocating motion of the piston produces the following effects.

The water from the reservoir, flowing continuously through the channel D, fills every part of the apparatus, including the pipes H and I, and taking as an example the position represented in the figure, that is, the piston A at the end of the stroke, the water contained in the apparatus is in free relation with the boiler the pressure of which it supports, whilst its communication with the reservoir is cut off by the orifice *a* sinking below that of the channel D. In this position, water may flow into the boiler, but only on the condition that *the level in the boiler is* BELOW *the mouth of the pipe H;* otherwise no drop of water can pass from the apparatus.

If the mouths of the pipes H, I, are covered by the water in the boiler, which transmits the pressure of the steam, the water contained in the apparatus is in the same condition as mercury in a barometrical tube which is too short to be in equilibrio with the pressure of the atmosphere; the tube would in this case be completely filled with mercury, which, instead of flowing out, would be driven up to the top of the tube.

But when the level sinks sufficiently to *uncover* the mouth of the pipe H, the steam dividing the liquid column may reach the top of it, and exerting its pressure above the mass contained in C, the water will be in a medium of equal pressure, and will flow through the pipe I under the influence of its initial height, from *b* to E.

It follows from this arrangement, that the apparatus, though constantly in communication with the reservoir, will not allow any water to enter the boiler till the level sinks below its normal point; but when this is the case each stroke of the piston may send into the boiler all the water contained in the apparatus, a quantity that is replaced by the reservoir when the piston reaches the other end of the stroke and brought the orifice *a* opposite that of the channel D.

Here, then, we have an ingenious instrument capable of self-action, certainly infallible, and requiring no valves or cocks of any kind. Without stopping its action for a moment, no atom of water can pass into the boiler while the level is at its normal point, but as soon as the level sinks in the smallest degree below this point, a fresh supply brings it back to its former position.

In applying this apparatus to a boiler, it is desirable to place the injection-pipe in that part of the boiler where the water is least agitated, which, in the case of fixed engines, will be the part farthest from the furnace. In the case of locomotives or steam-vessels, the pipes H and I may be made to communicate with a receptacle placed on the outside of the boiler and forming a kind of water-level, the transverse section of which, being small, would render less sensible the accidental oscillations of the general level. These are details of practice that may be easily contrived.

As to the details of the model represented by the figure, they require only a passing notice, as the apparatus is merely one of principle, and far from being a definitively chosen arrangement.

The piston A, though turned very exactly to fit the aperture in which it works, is provided on each side of its orifices with an elastic band or washer *d* to prevent any escape. The reciprocating motion may be communicated to it in several ways. But as the passage of the water from the reservoir into the apparatus, or from the apparatus into the boiler, takes place at the ends of the stroke, the piston should rest a moment in that position. This might easily be effected.

The parts marked J in the figure are those by which the apparatus is fixed to the boiler.

Section of the Injection-Tube for Condensers.—We have based our calculations of the section of the injector and the air-pump of condensers upon the following Table.

This Table shows, as we might, indeed, have foreseen, that the quantity of water to be injected for the purpose of effecting condensation in the same final conditions *decreases* as the initial pressure increases and as the expansion is prolonged. The proportional weight of cold water to that of steam expended increases, however, with the pressure, and, as the last column of the Table shows,

26 times its own weight of cold water is needed to condense steam at 1 atmosphere, a proportion that becomes 27 for 7 atmospheres.

TABLE OF THE QUANTITIES OF COLD WATER REQUISITE FOR CONDENSATION, THIS WATER BEING TAKEN AT 12°; THE CONDENSING WATER RAISED TO 35°; AND THE RATIO OF THE USEFUL TO THE THEORETICAL WORK OF THE STEAM BEING 50 PER 100.

Pressure in atmospheres.	Weight of Cold Water to be injected to the horse-power an hour, in kilogrammes.								Ratio of the weight of the Water injected to that of the Condensed Steam.
	Full pressure.	Admission $\frac{1}{2}$	Admission $\frac{1}{3}$	Admission $\frac{1}{4}$	Admission $\frac{1}{5}$	Admission $\frac{1}{6}$	Admission $\frac{1}{8}$	Admission $\frac{1}{10}$	
1	895	539	447	405	382	369	353	350	26·18
2	812	487	394	352	325	309	288	275	26·45
3	764	459	374	332	305	289	265	252	26·52
4	749	446	361	321	294	275	254	240	26·76
5	737	438	355	314	287	269	247	231	26·90
6	724	431	347	307	283	264	242	226	26·92
7	713	421	343	302	278	259	238	223	27·00

To show the use of the above Table, let us consider the following question. What quantity of cold water is required for purposes of condensation in a fixed engine of 30 nominal horse-power, the pressure being 5 atmospheres and the degree of expansion 6 to 1?

The Table gives, for these conditions, 269 kilogrammes to the horse-power an hour; which makes for 30 horse-power, $269 \times 30 = 8070$ kilogrammes or litres an hour.

Thus we have to the second $\frac{8070}{3600} = 2{\cdot}241$ litres.

And for a day of 12 hours, $8070 \times 12 = 96840 = 96{\cdot}840$ cubic mètres.

This volume of water is considerable, and shows the necessity of considering the capabilities of a place in this respect, before having recourse to a condensing engine.

The water is injected into the condenser through the mouth of a pipe which plunges directly into the tank, or which simply communicates with a reservoir fixed at the same height as the condenser.

Though there is no reason why an excess of section should not be given to this pipe as well as to the ajutage at the end, and the supply be regulated by a cock, it is none the less profitable and interesting to consider the *minimum* of this section.

When the pipe plunges directly into the tank, the velocity with which the water will be injected into the condenser will depend on the difference of the pressure of the atmosphere and the sum of the counter-pressure added to the height of the suction. When the water has been previously raised to the height of the condenser, the initial pressure is that of the atmosphere diminished by the counter-pressure.

In the former of these two conditions, the height at which injection would be impossible may be easily foreseen; it is the same as for an ordinary pump. Not only must this limit never be reached, but at a height which would render the work of suction doubtful the water must be raised by means of an auxiliary pump.

To deduce the minimum section of the injection-pipe, let us assume 5 mètres to be the maximum height of suction and $\frac{1}{2}$ atmosphere the extreme of the counter-pressure.

The velocity with which the water will be injected into the condenser, under these conditions, will be (see Armengaud's Treatise on Hydraulic Motors),

$$v = \sqrt{19{\cdot}62 \times (10{\cdot}333 - 5^{m} - 2{\cdot}667)} = 7^{m}{\cdot}23 \text{ a second.}$$

The greatest quantity given in the preceding Table is 895 litres to the horse-power an hour, say, in round numbers 900, which gives to the horse-power a second $\frac{900}{3600} = 0{\cdot}250$ cubic decimètre, or 250 centimètres. Dividing this cube by the above velocity, expressed in centimètres, we have for the section sought $\frac{250}{723} = 0{\cdot}345$ square centimètre to the horse-power. Thus for an engine of 20 horse-power, the minimum theoretical section of the injection-pipe, for the given height, will be $0{\cdot}345 \times 20 = 6{\cdot}9$, say 7 square centimètres. But to retain the necessary latitude, and to compensate the loss occasioned by friction and by the contraction of the terminal ajutage, the section of this pipe, supposed straight and of the same size throughout, should be, at least, doubled; the preceding example would, therefore, give 14 square centimètres, corresponding to a diameter of 42 or 43 millimètres.

Having taken as a basis the greatest quantity of water to be injected to the unit of power, the extreme counter-pressure and the height of suction beyond which it becomes necessary to raise the water by means of an auxiliary pump, it seems that we may admit, as a rule applicable to every case,

That the section of the injection-pipe should be practically fixed at 0·7 *square centimètre, or* 70 *square millimètres to the actual horse-power, taking as a basis the greatest useful power which the engine is capable of developing.*

These dimensions are adopted by many engineers of the present day.

Dimensions of the Air-Pump.—The considerations concerning the injection-pipe of the condenser,

and the Table on which those considerations were based, enable us to determine the dimensions of the air-pump; and in our following remarks the references must be understood to be to that Table.

The function of the air-pump, as is well known, is to withdraw continually from the condenser not only the water injected with that arising from the condensing of the steam, but also the air which is evolved from it. This latter element is the most difficult to determine; but as the power practically given to the pump exceeds by much the result found by approximation, we may content ourselves with a rough estimate.

It is known that water, at the usual temperature and pressure of the atmosphere, absorbs about $\frac{1}{14}$ of its volume of air or gases in the condenser, in which we will suppose the pressure to be $\frac{1}{10}$ of the atmosphere, and the temperature from 35 to 38 degrees. The disengaged air expands under the double influence of the diminution of pressure and the increase of its temperature, which would then be 23 degrees, rising from 12 to 35.

Proceeding upon this hypothesis by means of the formula for the expansion of gases, we find that the volume of air to be extracted by the pump is equal to about $\frac{8}{10}$ of that of the water. But if we take into account the volume of steam mixed with the air and of an equal volume, we must consider the total volume of gases to be extracted as approximatively equal to $\frac{16}{10}$ of that of the water injected.

Denoting by P′ the weight of the water injected, and by P that of the corresponding quantity of steam to be condensed, the total quantity of water which the pump will have to extract, at each single stroke of the steam-piston, is $P' + P$, consequently $P' + \frac{P'}{27} = \frac{28}{27} P'$. As with water, the density of which is taken as unity, we may take the weight for the volume, that is substitute here V for P′, we may say, taking into account that of the air above, that the total volume to be extracted by the pump at a single stroke of the driving piston is equal to $\left(\frac{28}{27} + \frac{16}{10}\right) V = 2{\cdot}64\,V$. Thus, admitting this theoretical number, when we have to inject into the condenser in a given time 300 kilogrammes or litres of water, the air-pump should engender, as a minimum, in the same time a volume of 792 litres.

If now we wish to determine the proportion between this volume and that engendered by the driving piston, we see at once that it is essentially variable, since we have taken as a basis the actual volume of steam expended, which changes relatively to that of the cylinder, according to the degree of expansion employed. To determine the principal limits of this proportion, we will take those which in the Table indicate the weights or volumes of the condensing water for 1 atmosphere with full pressure, or no expansion, and for 7 atmospheres with admission $\frac{1}{10}$.

For the former of these two conditions giving 895 litres of condensing water, the preceding rule gives, as the volume of the air-pump, $2{\cdot}64 \times 895 = 2363$ litres nearly.

But for these conditions, Armengaud has shown that the driving piston should engender 58066 litres; the ratio of these two volumes is, therefore, $\frac{2363}{58066} = 0{\cdot}04$. That is, the theoretical volume of the air-pump would be only $\frac{1}{25}$ of that of the cylinder.

Passing on to the second case, admission $\frac{1}{10}$, pressure 7 atmospheres, which corresponds to 223 litres of injected water, and to 23626 for the volume of the cylinder, that of the pump would be $2{\cdot}64 \times 223 = 589$ litres; and its ratio to that of the cylinder $\frac{589}{23626} = 0{\cdot}025$.

In this latter case, the volume engendered by the air-pump will be only $\frac{1}{40}$ of that of the cylinder; and if we had chosen an example with a small pressure and a great expansion, the result would have been smaller still.

It follows from the preceding that the air-pump, like the condenser, should be proportionate, not relatively to the absolute volume engendered by the whole stroke of the steam-piston, but by taking as a basis the volume of steam expended at full pressure. It now remains to see what correction should be made in the preceding theoretical proportion.

Hitherto we have admitted a vacuum in which the pressure was at least $\frac{1}{10}$ of the atmosphere; but if $\frac{1}{20}$ be reached, a result which some have endeavoured to bring about, the gases to be abstracted will acquire a double volume, say $\frac{32}{10}$ V, which, added to that of the water, gives for this total volume $\left(\frac{28}{27} + \frac{32}{10}\right) V = 4\,V$ nearly.

If, as Watt did, we double this product, to provide for the imperfect working of the pump, and for the possible increased power required of the engine and obtained by a lengthened admission or an augmented initial pressure, we shall have the following simple rule;—

The useful and effective volume engendered by the air-pump should be equal to 8 *times that of the cold water injected.*

This rule may be taken as a safe guide, but it must not be regarded as resolving the problem in an absolute manner, for an engine is never constructed to develop always the same power, with the same degree of expansion and the same initial tension; and the volume of the pump, which is invariable, should be determined by the mean power which the engine is capable of producing.

To compare the results of this rule with the usual data, we will consider two examples.

First Example.—To find the volume of the air-pump for an engine working without expansion with steam at 2 atmospheres, the ratio of the useful to the theoretical effect being $\frac{50}{100}$.

In this case, Armengaud gives 27·541 cubic mètres as the volume engendered by the steam-piston to the horse-power an hour.

The Table gives as the quantity of water to be injected 812 kilogrammes.

The effective volume, to the horse-power an hour, of the air-pump will, therefore, be according to the proposed rule, $112 \times 8 = 6496$ litres or cubic decimètres.

Comparing this volume with that of the cylinder, we find $\frac{6496}{27551} = \frac{1}{3 \cdot 1}$.

This pump will thus have very large dimensions comparatively to the cylinder, for if it is of a single stroke, its volume a stroke will be about $\frac{2}{3}$. This excess is explained by the fact that the rule is established for a much more complete vacuum than was obtained in old condensing engines without expansion.

Second Example.—Solve the same problem for an engine working with $\frac{9}{10}$ expansion and 4 atmospheres.

The specific volume of the cylinder is, according to the same authority, 42·789 cubic mètres.

The quantity of water to be injected is 240 kilogrammes or litres; the volume engendered by the pump-piston equals $240 \times 8 = 1920$ cubic decimètres.

Ratio of the two volumes $\frac{1920}{42789} = \frac{1}{22 \cdot 3}$

This time the pump would be much less powerful than that usually made. But an engine, the nominal power of which is regulated by the exceptional admission of $\frac{1}{10}$, ought to give in a case of need the double of this power, by increasing the length of admission to $\frac{1}{5}$ of the stroke of the piston.

Consequently, this ratio would by this only be reduced to one-half, since the quantity of steam expended, and as a consequence that of the water injected, is doubled. But for $\frac{1}{5}$ admission and 4 atmospheres, the quantity of water to be injected is, according to the Table, 294 litres, whence the volume to be practically adopted for the pump becomes $294 \times 8 \times 2 = 4704$ cubic decimètres. And its ratio to that of the cylinder assumes this last value, $\frac{4704}{42789} = \frac{1}{9}$ nearly.

We have nothing to add to these examples, which show clearly how the rule we have laid down is to be used—a rule that is at once conformable to the proper working of the pump and the exigencies of practice.

Dimensions of Steam-Ports.—Induction and Eduction Pipes.—Section of the Orifices of Induction and Eduction.—The dimensions of the pipes and orifices traversed by the steam in passing from the boiler to the cylinder, and of those through which it escapes into the atmosphere or into a condenser, is a matter which has not always been sufficiently considered, and which, even at the present day, when the construction of steam-engines is pretty well understood, is somewhat neglected by builders.

This question, considered on purely theoretical grounds, would be an extremely complicated one; but we are now in possession of practical results which enable us to solve it in a very simple way and with a high degree of certainty. We shall, therefore, confine ourselves to a general examination of the facts which accompany the circulation of the steam when on its way to the cylinder, or when escaping from it, and to a simple exposition of the principles by the aid of which we are enabled to determine the proper dimensions of the passages through which it flows.

Communication between the boiler and the cylinder is provided by means of a pipe, circular in form, leading from a cock on the boiler to the steam-chest, through which the steam is allowed to flow in regular quantities by means of certain valves.

If we suppose, for a moment, that these several regulators offer a passage to the steam, and have all an aperture equal in section to that of the pipe, the steam will flow into the cylinder with a velocity easily calculated. If there be no sharp angles, this velocity will be constant throughout the distance, and if the pressure in the boiler be considerably greater than that in the cylinder, it may reach several hundred mètres a second.

To enable us, however, to form an idea more in accordance with fact, we must remark that at the moment when the steam begins to flow into the cylinder, the piston, which is at the beginning of its course, is set in motion with a velocity immeasurably less than the initial velocity of the steam. Consequently, the space left vacant above it is soon saturated, and an equality of pressure with the boiler being theoretically established, the flow of the steam can take place only with the advance of the piston, with a velocity, in the steam-pipe, in inverse ratio with its section and that of the cylinder.

Suppose, for example, that the piston moves with a mean velocity of 1 mètre a second, and that its superficies is twenty times that of the steam-pipe, the steam will flow through the latter with a velocity of only 20 mètres a second, instead of from 300 to 500 mètres and more; it will acquire from 1·5 to 5 atmospheres, by flowing in a medium the pressure of which was constantly 1 atmosphere. In a non-condensing engine, we may consider as such the medium in which the steam flows, for the piston is nothing but a diaphragm interposed between it and the surrounding atmosphere.

It follows from this that, if the circuit of the steam were of very small extent, and without sharp angles or other impediments, a pipe having a very small section would be sufficient, since the steam is required to move through it with a velocity very much less than it is capable of acquiring in these conditions.

Let us suppose, for example, the lowest pressure of 1·5 atmosphere, no condensation, and, for the piston, the high velocity of 3 mètres a second. The velocity of the flow of the steam into the atmosphere, under this pressure of 1·5 atmosphere, is equal to 343 mètres. Consequently, the section of a steam-pipe, perfectly uninterrupted and very short, might be reduced, as a minimum, to the following fraction, $\frac{3}{343} = \frac{1}{114}$ of the surface of the piston, below which value the space would no longer be *saturated*. The conditions assumed here as an example certainly correspond to

those which allow the steam the least practical velocity, for this pressure is never employed, especially in non-condensing engines, and still less in engines whose pistons attain the velocity of 3 mètres a second, a speed that is hardly to be met with in locomotives. Consequently, the proportion $\frac{1}{114}$ may be retained for the purpose of comparing it with that taught by practice.

Instead of short pipes and perfectly regular sections, we have, on the contrary, pipes sometimes very long, furnished with cocks capable of narrowing their section; the slide-valve, instead of uncovering the steam-ports at once, uncover them progressively, and in certain cases incompletely, the pipes are often crooked and the whole of the passages are liable to be cooled by exposure, and so on.

It is easy to see in what proportions these causes of irregularity influence the velocity of the steam, and that it would be impossible to limit the passage to the proportions supposed above.

On account of these numerous effects, more easily described than calculated, constructors have increased the section of the steam-pipe and of the steam-ports; these latter, however, depend in some degree upon the system employed. But the section of these various passages is limited, for the larger the pipes, the more considerable are the lost spaces, and the volumes of circulating steam exposed in proportion to their magnitude to the cooling influence of the atmosphere.

These observations do not apply to the eduction-pipes which may have throughout their length as large a section as possible, if a portion does not serve alternately for the ingress and egress of the steam. This is one of the reasons which have led builders to adopt special eduction-pipes.

It is of special importance to give a sufficient diameter to the eduction-pipe of a non-condensing engine, especially when this pipe ascends to a great height; for the velocity of a gas will be greatly retarded when the ratio between the diameter and the length is very considerable, and this occasions a resisting pressure at the beginning of the passage. It is certain that a fault of this kind may completely derange the performance of an engine, in other respects in perfect order. To avoid this error, especially in the case of small engines, it will be necessary to calculate specially the ratio to be established between the diameter and the length of the outer eduction-pipe, so as to reduce this *counter-pressure* to a degree that is not hurtful.

To reduce to figures the foregoing facts upon which we have been reasoning, we have drawn up the following Table, indicating the proportions adopted in several kinds of engines, by builders, for the induction and eduction pipes and orifices. These engines are characterized in the present Table by their nominal horse-power, the initial pressure of the steam, the degree of expansion, and the diameter and surface of the piston. Several have two cylinders; but the dimensions given refer invariably to one only.

Examination of the succeeding Table.—The first thing that strikes the attention on examining this Table is the want of agreement among the results found, even if we separate each kind of engine, which shows that all builders are not agreed as to the proportions to be adopted between the surface of the piston and that of the steam ports and pipes; or that a certain degree of variation is possible without injuriously affecting the working of engines; for all those given in the Table are of recent construction, and work satisfactorily.

Another remarkable fact is that M. Fargot's engines have the smallest passages, and these engines are known to be very carefully constructed, and to reach the highest degree of utilization of fuel. But it must be remembered that they are regulated for a very considerable degree of expansion.

If, however, we examine this series of fixed engines, the mean speed of the pistons of which is about 1 mètre a second, which engines are all expansive and of a pressure varying from 2·5 to 5 atmospheres, we shall see generally;—

1. The section of the steam-pipe varies between $\frac{1}{25}$ and $\frac{1}{30}$ of the superficies of the piston, without the variation being justified by the special conditions of the engine.

2. The section of the steam-ports, which might be greater than that of the steam-pipe, through which the flow is continuous, exceeds it only by a very little.

3. The exhaust-pipe, between the exhaust-port, the cylinder and the condenser, or the atmosphere, is of a larger section, varying from $\frac{1}{20}$ to $\frac{1}{15}$ of the superficies of the piston, the largest section $\frac{1}{14}$ corresponding to the escape into the atmosphere.

4. The section of the exhaust-port is equal to that of the pipe; nothing hinders it, however, from possessing very large proportions, except the increase in the surface of the slide-valve.

Passing on to the locomotives, the pistons of which move at a speed nearly three times that of fixed engine pistons, we notice a considerable increase of the sections of the steam passages, and particularly those of the ports; the exhaust-pipe, which is also very large at the beginning, is, on account of its particular functions, diminished in a variable manner at the opposite end, which prevents us from giving it a value proportional to that of the piston. And in locomotives, the steam-ports would be $\frac{1}{12}$ and the exhaust-port $\frac{1}{8}$ of the superficies of the piston.

In marine engines we remark the same proportions as in fixed engines, though the conditions of pressure, expansion, and speed of the piston are slightly different. There is, however, an enlargement of the steam passages, and particularly of the exhaust ports and pipes, the section of which reaches $\frac{1}{11}$ and sometimes $\frac{1}{10}$ of that of the piston.

The Table contains one example of a road engine of small power, but great speed, the various parts of which engines are usually of small dimensions. The sections of the pipes and ports are the same as in the fixed engines, and the speed of the piston is not greater. It might have been supposed, however, on account of the frequent pulsations of the mechanism, that this was precisely the case in which a large section should be given to these passages; but the loss of steam would have been greater, and the builder deemed it expedient not to increase the dimensions.

The preceding facts demonstrate that much is gained by providing separate channels for the ingress and the egress, and by suppressing those situated between the slide-valve and the interior of the cylinder, this will allow us to give a larger section to the various orifices. It is useless to

Dimensions of the Steam-Ports.

Kind of Engine.	Induction and Eduction Pipes belonging to Engines of Different Systems.														
	Conditions of Motion.			Cylinder		Steam-Pipe.			Eduction-Pipe.			Induction Orifices.		Eduction Orifices.	
	Pressure of the Steam.	Mean speed of the Piston.	Ratio of the introduction to the Stroke.	Diameter.	Section.	Diameter.	Section.	Ratio of this Section to that of the Cylinder.	Diameter.	Section.	Ratio of this Section to that of the Cylinder.	Section.	Ratio of this Section to that of the Cylinder.	Section.	Ratio of this Section to that of the Cylinder.
	atmospheres.	mètres.		millimètres.	sq. centimètres.	millimètres.	sq. centimètres.		millimètres.	sq. centimètres.		sq. centimètres.		sq. centimètres.	
Fixed Engines.															
Bourdon, horizontal, 25-h., condenser	3·5	1·16	$\frac{1}{5}$	420	1385	80	50	$\frac{1}{27·7}$	100	78·5	$\frac{1}{17·6}$	44·4	$\frac{1}{31}$	51·8	$\frac{1}{26·7}$
Bréval „ 20-h. „	4	1·50	$\frac{1}{5}$	350	962	60	23·3	$\frac{1}{41}$	100	78·5	$\frac{1}{12·2}$	43	$\frac{1}{22·3}$	71·5	$\frac{1}{13·4}$
Fargot „ 60-h. „	5	1·56	$\frac{1}{15}$	650	3318	80	50·3[b]	$\frac{1}{66}$	120	113	$\frac{1}{29}$	85	$\frac{1}{39}$	119	$\frac{1}{30}$
„ „ 20-h. „	5	1·28	$\frac{1}{15}$	415	1353	62	30	$\frac{1}{45}$	100	78·5	$\frac{1}{17}$	33	$\frac{1}{41}$	38·5	$\frac{1}{36}$
Powell, 2-cylinder, Woolf, 70-h., condenser	2·5	1·10[a]	$\frac{4}{5}$[b]	500[c]	1963	100	78·5	$\frac{1}{25}$	140[d]	154	$\frac{1}{12·7}$	123·5[e]	$\frac{1}{16}$	174·2[f]	$\frac{1}{11·2}$
Schneider single-stroke, 170-h. „ ..	3·5	1·00	..	1[m]·800	25447	300	707	$\frac{1}{36}$	390	1195	$\frac{1}{21·3}$	880	$\frac{1}{29}$	.. [g]	..
Cail and Co., horizontal, 8-h., non-condenser	5	1·04	$\frac{1}{6}$	320	804	65	33·2	$\frac{1}{24·2}$	85	57	$\frac{1}{14}$	31	$\frac{1}{26}$	54	$\frac{1}{14·9}$
Locomotives.															
Buddicon, tender engine	8	3·36	..	420	1385	100	78·5	$\frac{1}{17·6}$	Elliptic	203	$\frac{1}{6·8}$	118	$\frac{1}{11·7}$	253·7	$\frac{1}{5·4}$
Cail, Crampton's system	..	3·50	..	400	1257	120	113	$\frac{1}{11·1}$	160	201	$\frac{1}{6·2}$	106·4	$\frac{1}{11·2}$	228	$\frac{1}{5·5}$
Marine Engines.															
Mazeline and Co., yacht l'Aigle	2·5	1·58	$\frac{2}{5}$	1[m]·800	25447	360	1018	$\frac{1}{25}$	460	1662	$\frac{1}{15·3}$	1320	$\frac{1}{19·3}$	2244	$\frac{1}{11·3}$
„ screw, 1000-h.	2·5	2·16	$\frac{1}{3}$	2[m]·100	34636	..	1608	$\frac{1}{21·5}$	630	3117	$\frac{1}{11·1}$	1200[f]	$\frac{1}{29}$	2300	$\frac{1}{15}$
Nillus, screw, 30-h...	2·5	1·28	$\frac{1}{3}$	500	1963	120	113	$\frac{1}{17·4}$	160	201	$\frac{1}{9·7}$	77[f]	$\frac{1}{25·5}$	198	$\frac{1}{10}$
Flaud, road engine, 5-h...	6	1·25	$\frac{3}{4}$	140	154	30	7·1	$\frac{1}{21·7}$	35	9·6	$\frac{1}{16}$	6	$\frac{1}{25·7}$	9	$\frac{1}{17}$

[a] Of the small piston. [b] In the small cylinder. [c] Diameter of the small cylinder. [d] Escape from the small to the large cylinder.
[e] Small cylinder. [f] Effective opening. [g] The same as for the introduction.

increase the size of the exhaust-port; the steam. to reach it, must traverse the same channel of reduced section by which it entered.

Lineal Dimensions of the Ports.—The steam-ports being rectangular, the proportions of their sides may have different values, among which we have to seek the most advantageous.

From the point of view of the quickest opening, that is, of the largest passage offered at the beginning of the stroke of the slide-valve, supposing the same method of working the valve, the ratio between the height and the breadth of the orifice will be of no consequence, for each fraction of the surface uncovered being, like the whole surface, proportional to the stroke of the valve, it follows that, whatever this ratio of the two dimensions may be, a given fraction of the stroke always corresponds to the same fraction of the surface uncovered. But if we consider all the functions of the slide-valve, we shall see at once that, on the contrary, there are weighty reasons for making the orifices *broader than high*, that is, in the form of a narrow rectangle, *having its short sides in the direction of the stroke of the valve.* Indeed, the total surface of the valve is, in every case, proportional to that of the orifices, or, to be more exact, will have the same external surface, whatever the ratio of their sides may be; consequently it will be subject to the same pressure. Now the work which its friction absorbs being the product of this pressure by the space passed over, to reduce this resistance to its minimum we must evidently diminish this space as much as possible; that is, *lengthen* the orifices, and place the short sides *in the direction of the stroke of the valve.* If the valve be worked by means of a circular eccentric, we have another reason for reducing the stroke as much as possible; for the general dimensions of the circular eccentric increase in very great proportions with the stroke which it has to produce.

This being the general rule, the ratio to be adopted is not absolute. Thus, it is necessary, in the case of a *short* cylinder, to lengthen considerably the orifices in order to reduce the length of the steam-chest; with a cylinder of ordinary proportions the same reason does not exist, but the question of the eccentric remains. For examples, we call attention to Fargot's engine of 60 horse-power, which has a long stroke, and to Mazeline's engine of 1000 horse-power, which, on the contrary, has a relatively short stroke.

In the engine of 60 horse-power, the induction-ports are 5 centimètres by 17, which corresponds to the ratio $\frac{1}{3{\cdot}4}$. In the marine engine of 1000 horse-power, the whole breadth of these orifices is 125 millimètres, 80 millimètres of which are uncovered by the valve for the introduction, and the whole breadth for the egress; the length is equal to $1^{m}{\cdot}500$, in two parts of $0{\cdot}750$ each. Taking as a basis the quantity uncovered, the ratio of the sides of these orifices would be 8 to 150 $= \frac{1}{18{\cdot}75}$.

These two examples are intended to give an idea of what may be found in practice, but they will lead to no rule. Each particular case will require different proportions which cannot possibly be foreseen. In engines of two cylinders it is desirable to give the same length of stroke to each of the two slide-valves, in order that they may be worked by the same eccentric, or the same contrivance, and to this end the orifices of the two cylinders being of different sections and requiring to possess an equal height, those of the smaller cylinder are made nearly square.

It seems to us unnecessary to dwell longer on a subject which rests upon such unfixed bases, especially as we believe the preceding Table, which shows the proportions adopted by experienced builders, to be a sufficient guide in practice.

Figs. 2297, 2298, are of the condensers of the Mooltan and other vessels: these condensers were constructed under the superintendence of Edward Humphrys, after the designs of that ingenious and well-known inventor Samuel Hall, of Basford. The Peninsular and Oriental Company's ships Mysore and Rangoon, of 400 nominal horse-power, were furnished with condensers by Humphrys like those exhibited in Figs. 2297, 2298. The boilers of each of the last-named ships contained 4800 square feet of heating surface, and the condensers of the Mysore and Rangoon contained 4712 square feet of condensing surface, and those of the Mooltan 4200 square feet. The indicated power of the Mooltan when tried officially was 1734 horse-power; hence the area of condensing surface for each indicated horse-power was rather less than $2\frac{1}{2}$ square feet.

For convenience of manufacture and arrangement of these engines, the condenser of each is divided into two parts A A, Fig. 2297, each part being exhausted by its own air-pump B, Fig. 2298, so that each pair of engines is provided with four air-pumps and four condensers. The air-pump B is 18 inches diameter with a stroke of 3 feet. These dimensions being used by Humphrys with injection condensers in engines of the same nominal power, he believes they are larger than necessary for surface condensers of engines in good condition, with condensing water at the average temperature of the sea in this climate; but as these engines had to be employed in the Indian seas, it was considered expedient to provide large air-pumps and large pumps for circulating the condensing water, so as to allow of almost any quantity of condensing water being driven through the condensers that may be found necessary in an Indian climate. The air-pumps B discharge their water direct into the boilers through the pipe C, according to Hall's plan, so that no feed-pumps are necessary. The air which leaks into the engines is allowed to escape by an open stand-pipe connected to the highest point of the feed-pipe, and carried up inside the mast, which is of iron, to a greater height than is due to the pressure of steam in the boilers. A valve regulated by a float was originally fitted to the Mooltan for allowing the escape of the air; but it was found to require some little attention, and hence the stand-pipe was substituted which answered perfectly without much attention.

Each condenser A A, Figs. 2297, 2298, contains 1178 seamless drawn pure copper tubes, $\frac{5}{8}$ in. outside diameter and No. 18 wire-gauge or ·050 in. thick, 5 ft. 10 in. long, weighing 28 oz. each tube, and fixed at 1 in. pitch centre to centre, as shown in Figs. 2299, 2300. The tube-plates of the Mooltan are of cast gun-metal $\frac{3}{4}$ in. thick; but those of the Mysore and Rangoon are of rolled copper, finished $\frac{3}{4}$ in. thick. These are first set as flat as possible, and the tube-holes marked out

upon them. The holes are then drilled under a common drilling machine with a drill of two diameters, shown in Figs. 2301, 2302, having a guard D upon it to fix the depth to which the larger diameter shall penetrate the plate. One machine, worked by an ordinary driller, drilled the 1178 holes in the tube-plate in seventy hours. The tapping of the holes is then proceeded with,

2297.

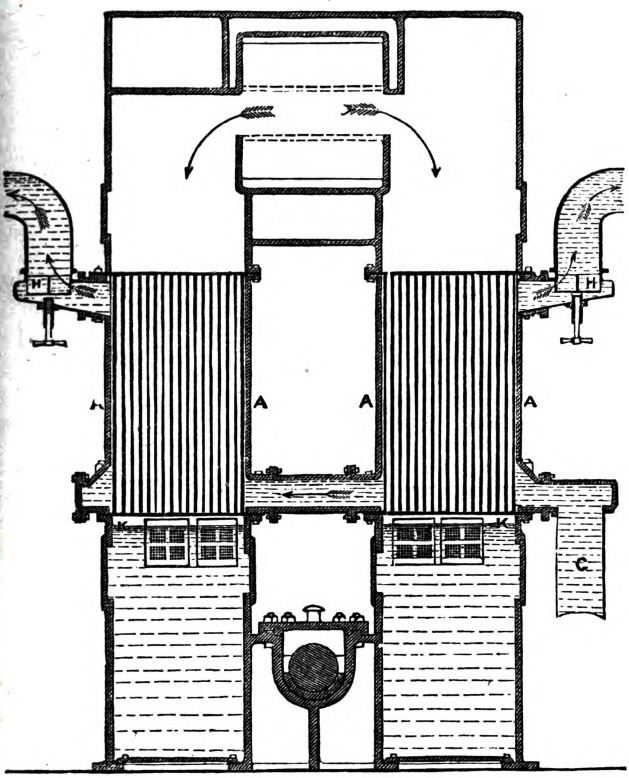

2298.

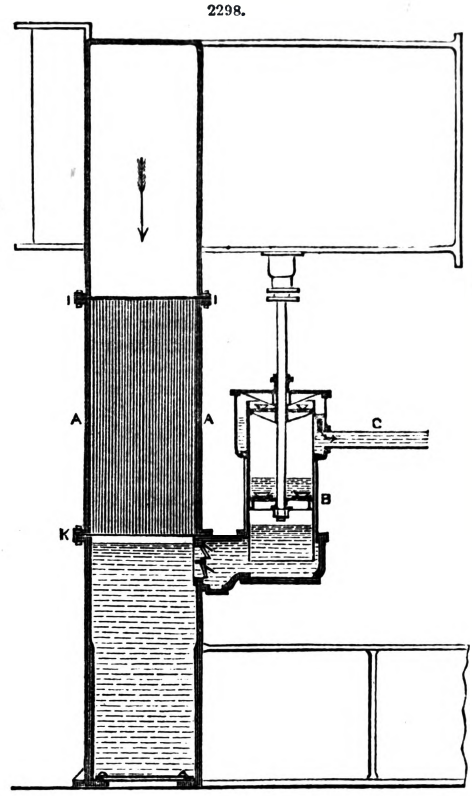

2299

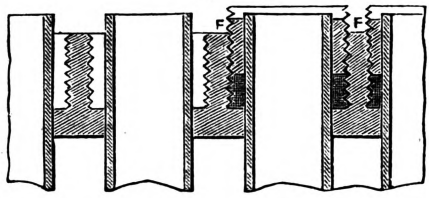

2300.

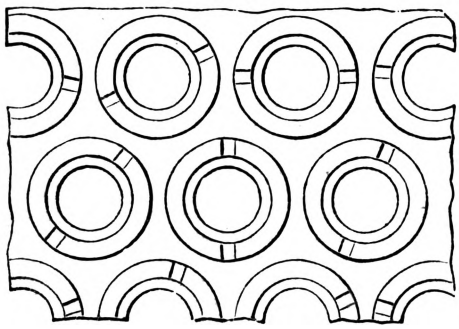

2301.

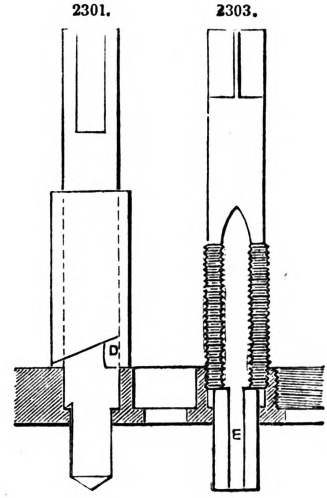

2303.

2302.

2304.

and is effected with a tap, shown in Figs. 2303, 2304, having a parallel end E to guide it, which fits the smaller diameter of the tube-holes. One man of ordinary skill tapped the 1178 holes in seventy hours. After having been drilled and tapped, the tube-plate is again set perfectly flat on a surface-plate, and then both sides are faced off in a lathe or planing machine.

The screwed glands F F, Fig. 2299, for securing the packing at the ends of the tubes, are made from Muntz' metal solid-rolled tubes, which are obtained in lengths of about 5 ft., rolled to gauge both inside and outside; the inside diameter is exactly that of the outside of the copper tubes, namely $\frac{5}{8}$ in., and the outside diameter is such that when screwed it will exactly fit the tapped holes in the tube-plates. It is screwed on the outside as it comes from the maker in a common screwing machine, as shown in Figs. 2305, 2306, and is then cut by a circular saw into $\frac{1}{2}$-in. lengths to form the glands. The saw marks are taken off the ends by a facing cutter revolving in a lathe, shown in Figs. 2307, 2308, and the same operation clears out the inside of the hole. The notch for the screw-driver is cut by passing a number of the glands, when screwed into a plate, under a revolving circular saw of the required thickness. The packing is composed of linen tape; a piece of this tape, 12 in. long and $\frac{7}{16}$ in. wide, is wound round a mandrel, the ends and edges being slightly stitched, in which state it is readily put into the tapped holes of the tube-plate, and when screwed down by the gland forms a very perfect and lasting joint. The thickness of the tape is such that 1000 of these packings weigh about 2 lbs.

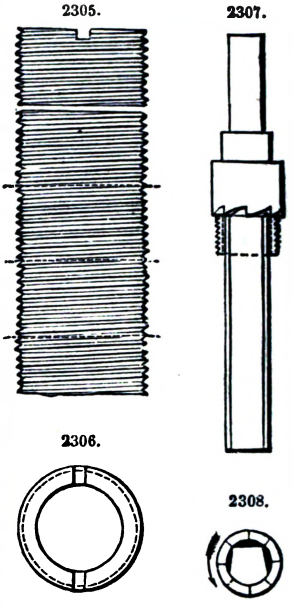

The exhaust steam from the engines passes down through the interior of the condenser tubes, and the sea-water for keeping the tubes cold is driven up through the spaces between the tubes. The sea-water is admitted through an inlet-pipe fitted with a slide-valve at the bottom of the ship, and enters the condensers at the bottom by the pipe G, Fig. 2297; it then circulates round the outsides of the tubes, and makes its exit through the regulating valves H H at the top of the condensers, at about the load water-line of the vessel. The valves H H answer the purpose of regulating the flow of sea-water equally through the two divisions A A of the condenser, and also of shutting out the water from above when the outsides of the condenser tubes have to be examined. The flow of water is produced by one of Appold's centrifugal pumps, the diameter of the revolving disc being 36 in.; it is driven by a pair of wood and iron spur wheels, the proportions of which are about 1 to $3\frac{1}{2}$, so that at the ordinary speed of the engines of the Mooltan, namely, 56 revolutions, the pump made 194 revolutions a minute. Two of these pumps were provided, the second being driven by an auxiliary engine to be used in case of the failure of the other.

The condensers of the Mooltan, in 1862, had run 42,000 miles; and at the end of 30,000 miles the engineer examined the inside and outside of the condenser tubes, and found the outsides perfectly clean; but inside there appeared a slight coating of grease resulting from the lubricating material employed in the interior of the engines. This was, however, so slight as not to affect the action of the condensers; the vessel ran the last 300 miles of the 30,000 at an average speed of 60 revolutions a minute with 24 lbs. steam in the boilers, and the vacuum in the condensers supporting a column of mercury $27\frac{1}{2}$ in. high. A very careful examination of the inside of the boilers showed that the action of the surface condensers, returning always pure water into them, is likely to ensure their continued efficiency, as there was no appearance of deterioration whatever. The lubricating material employed in the engines collects in the boilers, adhering to the sides and stays about the water-line, and is to be found in large lumps in the bottom water-space below the furnaces; this requires to be taken out occasionally, otherwise, in the opinion of the engineer in charge, it causes the boilers to prime.

Before determining on adopting exactly Hall's mode of manufacture for the condensers, although his experience of it had been very favourable, Humphrys examined the other plans for surface condensation, in most of which the joints between the tubes and tube-plates are made with vulcanized india-rubber; but having understood that a chemical action took place between the copper of the tubes and the sulphur employed in preparing the india-rubber, and not being able to discover in the new plans any advantage over Hall's condenser, he adhered to this construction in the condensers of the Mooltan. As regards the action of the vulcanized india-rubber on the copper tubes, the writer placed a piece of copper tube inside a piece of vulcanized india-rubber tube, and carefully washed and weighed the copper tube every month, and found a gradual decrease in its weight.

In designing the engines of the Mooltan no provision was made for cleaning either the insides or the outsides of the tubes of the condensers, except that the connection between the condensers and cylinders was so arranged as to admit of the ready removal of the entire condenser case with its tubes. Each condenser case is a rectangular vessel about 2 ft. 10 in. by 3 ft. 6 in., and 5 ft. 10 in. high, as shown in Figs. 2297, 2298; and by removing the bolts in the joints I and K at top and bottom, the entire condenser with its tubes can be drawn out clear of the cylinder, and the inside of the tubes can then be cleaned, the tube-plates being in this case of gun-metal cast with the edge thickened $\frac{1}{2}$ in. all round on the outer face, so as to clear the projecting glands of the tube ends. The two condensers of one engine might be removed, the tubes cleaned, and the condensers refixed in forty hours; but up to 1862 there was nothing in the state of the condensers to indicate the necessity of cleaning either the insides or outsides of the tubes; indeed the outsides were cleaner and brighter than when the tubes were first fixed in their place. When it becomes necessary to clean the insides, it is recommended to apply a solution of caustic soda by filling the condenser with it up to the top of the upper joint I; this was also the practice followed by Hall with success in his condensers in 1837. Indeed Hall's condensers were employed in the Penelope for more than six

years, and the engineer in charge during that period stated that, with the exception of occasionally cleaning out the insides of the tubes by the application of a solution of soda and water, the condensers never gave an hour's trouble.

The illustrations, Figs. 2309 to 2311, are of David Marshall's plan for packing surface condensers. The tube packing of Marshall is simple, effective, and reliable, it requires neither screws nor glands to effect the required tightness.

2309.

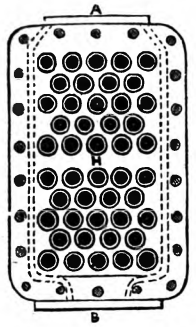

2310.

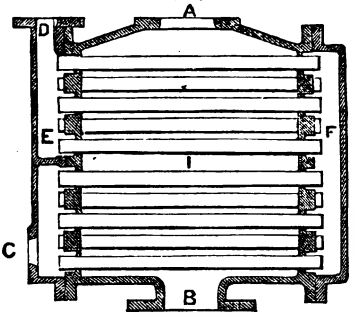

2311.

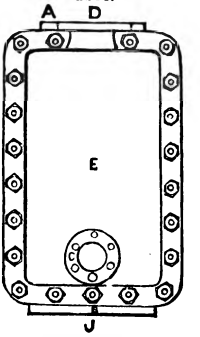

References:—A, Exhaust steam inlet from engine cylinders. B, Outlet to air-pump of engine. C, Inlet for circulating water. D, Outlet for circulating water. E, F, Portable covers or doors. G, The tube packing. The circulating water in centre of packing presses outer ring to tube-plate and inner to tube, thereby making a perfect tight joint, and still allowing tube to expand. H, Front view with door off, showing tubes and packings. I, Longitudinal section, showing tubes, packings, and doors. J, Front view with door on, showing inlet and outlet C, D.

The efficiency of this packing has been carefully tested on board many ships. Andrew Brown, one of Simon and Co.'s engineers, states that when one of their ships, the Africa, was running with 60 lbs. pressure, the vacuum was steady at 27½ in. of mercury, and that all the joints made by this packing were perfectly tight.

Fig. 2312 is an elevation, and Fig. 2313 is a section, of a simple form of feed-water heater, invented by H. N. Waters, and intended to be used with non-condensing engines. Referring to the section, Fig. 2313, it will be seen that the heater consists of a reservoir or casing A, into which the cold water flows from a cistern through the pipe B and perforated pipe or sprinkler C, this latter distributing it in the form of a number of fine jets. The flow of water is regulated by the cock H, so that it is maintained at a proper level in the casing, as shown by the glass gauge G.

2312.

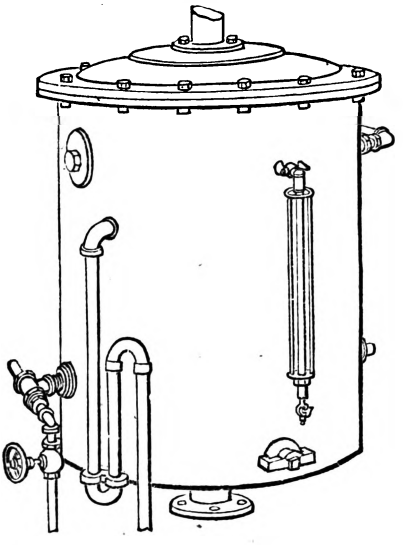

2313.

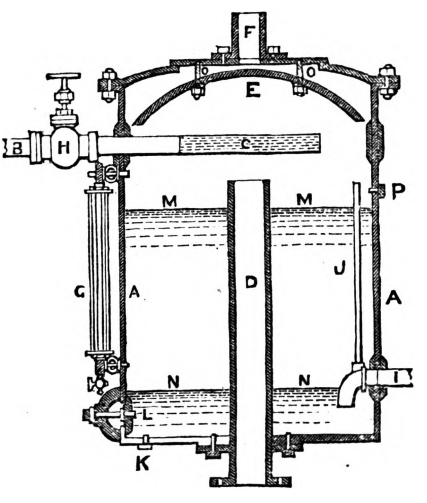

The exhaust steam from the engine enters through the pipe D, and impinges against the deflector E, which deflects it downwards again against the sprinkler C. That portion of the steam which is not condensed passes round the edges of the deflector E to the exit-pipe F at the top of the apparatus. The feed-pipe I, leading to the pump, is turned down inside the reservoir, and terminates about 4 in. above the bottom of the casing, so that the pumps can draw without disturbing the sediment. At the bend of the pipe I there is attached an air-pipe J, which extends upwards above the highest water-level M in the reservoir. This pipe is for the purpose of admitting air or steam to the pumps through the pipe I when the water-level falls below the line N, so that the pumps cannot draw off the water below that level. When the pump is situated below the

pipe I, the water will flow out to the level N of the bottom of the inside of the pipe; but when the pump is above I, the lowest water-level producible will be on a line with the top of the inside of the pipe I. At L is a hand-hole for giving access to the interior of the heater for cleaning or other purposes; while K is a plug for drawing off the water from the casing when desired, and P is an overflow-pipe, or plug, to prevent the water from rising sufficiently high to enter the pipe D.

In addition to acting as a water-heater merely, the arrangement we have described serves to collect the major portion of the solid matters contained in the feed-water, and thus greatly diminishes, and in many instances entirely prevents, the formation of scale in the boilers. By the employment of the sprinkler the water is brought into such intimate contact with the exhaust steam that it is raised quite to the boiling-point, and the arrangement of the reservoir and feed-pipe allows the solid matters which become separated at that temperature to be deposited before the water is pumped into the boiler.

Fig. 2314 is a section, and Fig. 2315 a plan, of heater with cover removed, showing the form of a rose. This arrangement was invented by Thomas Aimers. The heater consists of a cylinder A, into which the cold water is introduced by pipe B, having a regulating cock C to maintain water at a proper level in the cylinder. On the under-side of the cover of the cylinder there is a rose D, into which the water flows from the pipe B; this rose is bored full of small holes, as shown in Fig. 2315, but the part immediately over the exhaust-pipe E has no holes in it, so that the water falls around the pipe in a continuous shower, and thus any water is prevented from entering the exhaust-pipe and becoming a drag upon the engine. The exhaust steam from the engine enters through the pipe E and impinges against the curved part of the rose; this throws it out upon the shower of water, through which it must necessarily pass before it makes its escape through the exit-pipe F, and the holes in the rose being more numerous over the entrance to that pipe, the full benefit is got from the steam. The feed-pipe G leading to the pump is placed at a considerable distance from bottom of cylinder, so that the pump can draw without disturbing the sediment. H is an overflow-pipe to prevent the water rising sufficiently high to enter pipe E.

This arrangement always gives an abundant supply of water almost at the boiling-point, by turning the cock C full on, and allowing the extra water to run through the overflow into a cistern. For a factory where hot water is much used this is a great advantage. The condensation of the steam is complete, and effectually takes off all back pressure from the engine.

2314.

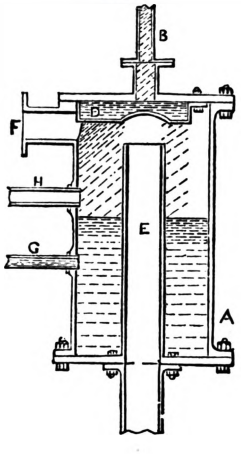

2315.

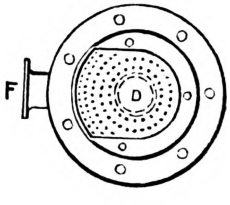

2316.

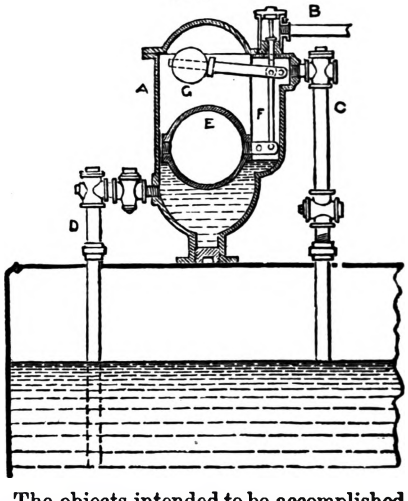

The Siphon Feed-water Regulator and Purifier, Fig. 2316.—The objects intended to be accomplished by this contrivance are fourfold; the regulation of the water fed to a steam-boiler; the absolute prevention of low water; the prevention of explosions, or injury to boilers so frequently caused by unequal expansion and contraction from the variable temperature at which water is usually fed to the boiler; and the purification of the feed-water before reaching the boiler, and the deposition and easy removal of the deposit. The apparatus is very simple in construction and entirely automatic in operation. It is, in reality, a siphon, the short leg of which is alternately a conduit for water and steam. Fig. 2316 is a section showing its internal construction. The reservoir or dome A is of cast iron, in the form shown, bolted to the top of the boiler at the point deemed most convenient. At its top it receives a pipe B connected with the feed-water pump and is the water supply pipe. The passage from the interior end of this pipe to the dome A is governed by an ordinary upward-lifting valve, or check-valve. Just below the inlet-pipe B is the pipe C, connecting with the steam-space of the boiler, having its lower end at the desired level of the water and forming the short leg of the siphon. Near the bottom of the dome is another pipe D, forming a communication with the dome and the water-space of the boiler, its lower end reaching nearly to the boiler bottom. This is the long leg of the siphon. Both these pipes are open at the bottom, and each is provided with cocks to be used, if necessary, to close communication between the interior of the dome and the boiler when the dome is to be cleared of the sediment deposited by the water. Inside the dome is a hollow lever float E pivoted to the rod F and balanced by the adjustable weight G.

When the water falls below its proper level, exposing the open lower end of the pipe C, steam, of course, passes up into the dome A, and the water contained in it and supporting the float E will descend, carrying with it the float and opening the valve to the inlet of water through the pipe B.

So long as this valve is open, water will consequently be forced in by the pump through the pipe D to near the bottom of the boiler. Soon as the water rises sufficiently to cover the end of the pipe C, no more steam will enter the dome, equilibrium will be restored, and the valve closed. If the pump is kept continually at work a side pipe may be used to carry off the overplus of water. Thus the height of water in the boiler will be automatically preserved at an absolutely uniform level.

The apparatus heats the feed-water in the chamber A to the same temperature as the water in the boiler, thus preventing the unequal expansion and contraction of the iron. In addition to this office of the apparatus, it is intended also to separate and precipitate the salts and earthy matters held in solution, as the water admitted to the dome becomes vaporized by the steam admitted through the pipe C, and consequently parts with its impurities, which, being specifically heavier, sink to the bottom of the dome, from which they can be readily removed on taking off the top of the dome. Applied to marine or other boilers subject to foaming, the apparatus will work as a regulator to the feed, as well as where there is no such annoyance.

Packing for Pistons.—This packing, introduced by G. M. Miller, consists of two rings, pressed outwards against the cylinder by the pressure of the steam as it acts on the alternate faces of the piston, without the use of any springs. The construction of the piston is shown in Figs. 2317 to 2319, as used by Miller in the locomotive engines on the Great Southern and Western Railway of

2317.

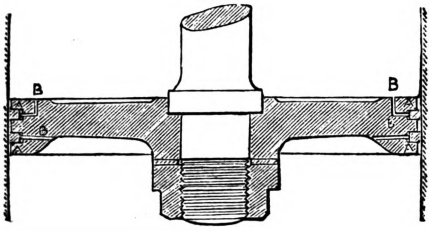

2318.

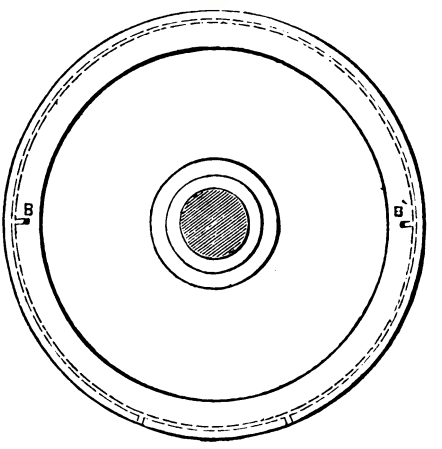

2319.

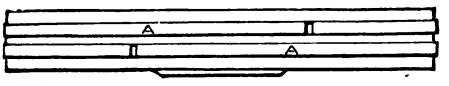

Ireland. The piston is of cast iron, 2 in. in thickness and 15 in. diameter. Two square grooves A A are turned in the edge of the piston, $\frac{3}{8}$ in. in width and $\frac{3}{8}$ in. apart, and a corresponding steel ring is fitted into each groove, the rings being divided at one part with a plain butt-joint, and sprung over the piston into their places. Two small holes B B, $\frac{1}{8}$ in. diameter, open from each face of the piston to the bottom of the nearest groove, whereby the steam is admitted behind the packing ring and presses it out against the cylinder so long as the steam is acting upon that face of the piston. The alternate action of the two rings is continued as long as the steam is acting on the piston, one of them being always pressed steam-tight against the cylinder.

In Figs. 2320 to 2322, is shown one of the pistons with brass rings which are $\frac{3}{4}$ in. width and $\frac{7}{16}$ in. thickness, the piston being $3\frac{1}{4}$ in. wide.

2320.

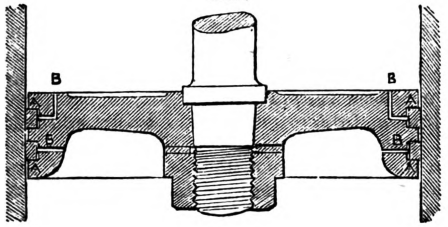

2321.

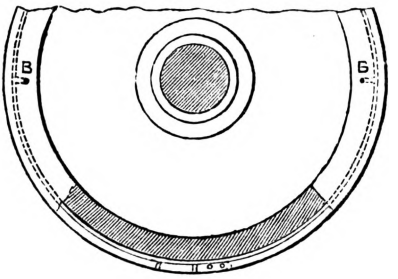

2322.

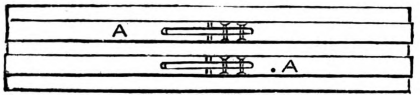

Another form of the piston has been used in cases where the piston is desired to be flush on both faces or to fit a cylinder with flat covers; in this a circular flat head forged upon the piston-rod is fitted between the turned faces of the two halves of a cast-iron piston, which are held together by turned pins riveted over, forming a hollow piston flush on both faces, fast upon the piston-rod, and without any loose part besides the two packing rings.

The ends of the rings where divided are made with a butt-joint, as in Fig. 2319; or with a lapped joint, as shown in Figs. 2323, 2324. The piston body is turned to pass through the cylinder easily; and the joints of the rings have been found to be practically steam-tight. In some cases

the joints have been tongued, as shown in Fig. 2322, but in Miller's experience this has not been found requisite; the butt-joint has invariably worked well, whilst it has the advantage of perfect simplicity of construction. In pistons where the packing ring travels over the opening of the cylinder port a small stop is fixed in the bottom of the groove, entering a short slot in the packing ring, to prevent the ends of the ring coming opposite the cylinder port, but still leaving the ring free to travel round a little in the piston grooves; but it is preferred for the packing rings not to travel over the cylinder ports.

2323.

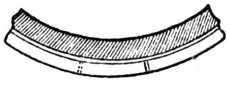

2324.

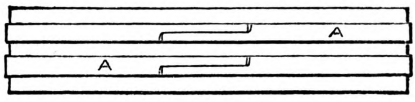

2325.

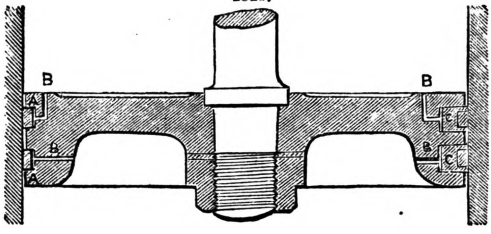

2326.

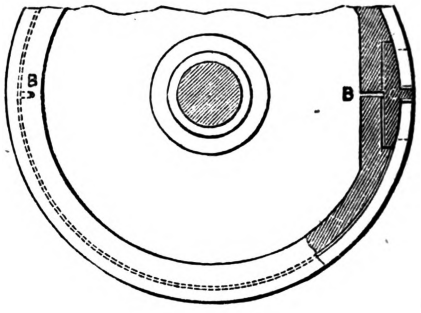

2327.

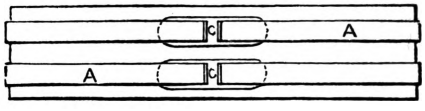

Another form of joint for the packing rings is shown in Figs. 2325 to 2327, intended to be used in a stationary engine with cylinder 16 in. diameter. A brass stop-piece C, 1 in. thick and 4 in. long, is placed in a recess at the back of the joint, serving as a cover to the joint at the top and bottom by projecting $\frac{1}{8}$ in. in thickness on each side of the ring.

These steam-packed pistons have been used more than seven years in the locomotives of the Great Southern and Western Railway, and have proved so satisfactory and advantageous that their use has been extended to all the locomotives working upon that line. The following are the results of the working in the engines running from Dublin, as regards the durability of one set of rings, the period of their wear, and the mileage of the engines whilst wearing them out. Nineteen engines working with one set of steel rings averaged 33,020 miles and $16\frac{1}{2}$ months' running, one engine having worked for three years and run as much as 98,073 miles with one set of packing rings. Five engines working with one set of brass rings under the same circumstances averaged 30,986 miles and nineteen months' running, the greatest work amongst them being $2\frac{1}{4}$ years and 42,197 miles. Twenty other engines with steel rings which were in use in 1862 also averaged 40,444 miles and twenty-one months' work, one of these having worked for $3\frac{1}{4}$ years and run 94,399 miles with the original set of rings.

The general result of the above is that one set of steel packing rings have lasted 37,000 miles and nineteen months' work, and one set of brass rings 31,000 miles and nineteen months' work, the difference in durability being about 16 per cent. in favour of the steel rings. In some of the individual cases of the pistons with steel rings, a very considerable variation from the average result of 37,000 miles is found in the durability of the packing rings, some of them having lasted $2\frac{3}{4}$ times the average and some only as much below the average. In the case of the brass rings the variation is not so great, amounting to $1\frac{3}{4}$ times the average in the highest and about as much below the average in the lowest. This variation in wear has not been fully accounted for; it may have occurred from a different character of metal in the cylinders, from priming of the boiler, and from the presence of grit in the water; but the writer has reason to believe that the rings have been frequently put into work and set with a pressure upon the cylinder from their own elasticity, thus causing a source of wear. It is found the best plan to turn the rings to the exact diameter of the cylinder, and to put them in without any spring upon them, so that they are not subjected to any wear except when the steam is acting on them. The steel rings are now slightly tempered, to admit of their being sprung into the grooves without altering their form. In all these pistons the steel packing rings were $\frac{3}{8}$ in. thick originally and $\frac{3}{8}$ in. wide, and they were worn down to about $\frac{1}{8}$ in. thick in the thinnest part before being removed. The brass rings are worn down from $\frac{7}{16}$ in. until they are $\frac{1}{8}$ in. thick. It must be remarked that when opportunities occur, as when engines are under repair, the rings are taken out and re-set to the size of the cylinder.

It is found in practice that two steam-ports of $\frac{1}{8}$ in. diameter are quite sufficient for each of the steel packing rings, drilled in the position B B shown in Figs. 2317 to 2330. The rings must be made to fit easily in their grooves, so as to move freely, with a clearance of $\frac{1}{16}$ in. at the bottom of the grooves for the steam to pass round behind the rings. No difficulty has been experienced from the steam passages becoming stopped up with a moderate use of tallow in the cylinders.

The use of this piston packing in locomotive engines has been productive of economy by reducing the friction and by prolonging the wear of both pistons and cylinders. It will be observed that only one ring is in action at the same time, and that when the steam is shut off, as in descending inclines and approaching stations, the piston is free to move without any friction. The operation

of putting in these rings so as simply to fit the cylinder is extremely easy, whilst great care and skill are required in giving springs the requisite degree of elasticity and in making them maintain it.

A number of stationary engine pistons are working with these packing rings, and they have proved very durable and thoroughly satisfactory, giving an advantage in reduction of friction, and in preserving the cylinder face in perfect condition. In one case of the engine of the Oldbawn Paper Mill near Dublin, with vertical cylinder 18 in. diameter and 2½ ft. stroke, working with 50 lbs. steam, the cylinder had previously been worn considerably out of truth and much grooved, and one of these pistons was put in having two steel rings of ¾ in. width and ⅜ in. thickness, and was in constant work for four years without the packing rings requiring renewal. They have lately been taken out for examination, and were found to be still ¼ in. thick; and the cylinder from its previous defective condition has been brought completely to truth throughout, with a highly polished surface.

These packing rings have also been used for four years for Pump Buckets, and have proved very satisfactory. In one case of a double-acting pump 8 in. diameter, shown in Fig. 2328, the two packing rings A A are of brass, ⅜ in. wide and $\frac{5}{16}$ in. thick, and are pressed out by the pressure of the water acting at the alternate faces of the bucket through two ports B B, ⅛ in. diameter, similar to those in the steam-pistons. This pump had two years' constant work at quarries and bridge foundations upon the Great Southern and Western Railway, before the packing rings required renewal.

In the case of single-acting pumps the bucket has only a single packing ring with ports opening from the upper side, as shown in Fig. 2329, which represents a pump bucket 5 in. diameter that has been working constantly for 2½ years at a station on the railway near Dublin. The packing ring A was originally ½ in. wide and ¼ in. thick, and has worn less than $\frac{1}{16}$ in. in the 2½ years. As the diameter in this case is too small to allow of the ring being sprung over the body of the bucket into its place, it is put in by means of a junk-ring D screwed on at the under-side of the bucket, as shown in Fig. 2329.

2328.

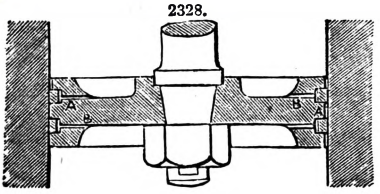

2329.

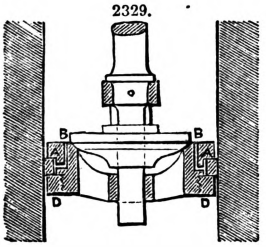

2330.

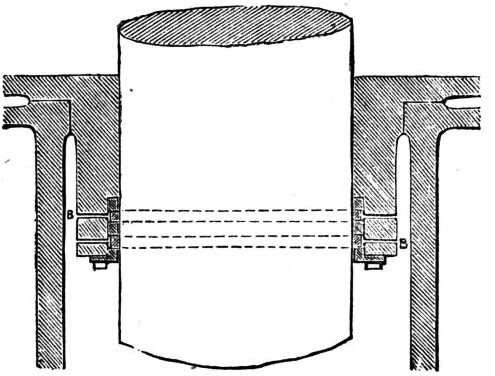

An application of the same construction of packing that has also been made to the gland packing of a 9-in. pump-plunger is shown in Fig. 2330; in which two brass packing rings are used, ½ in. wide and ⅜ in. thick, just like the piston packing rings, except that they act in the opposite direction, being pressed inwards upon the plunger by the pressure of the water through the ports B B.

Naylor's Safety-Valve.—This improvement in the construction of the safety-valves at present in use on locomotive, marine, and stationary engine boilers, for the purpose of preventing the pressure of the steam whilst blowing off through the safety-valve from rising beyond the limit to which the valve is adjusted. This rise of pressure during blowing off is found to take place to a greater or less extent in all steam-boilers with ordinary safety-valves, including locomotive, marine, and stationary boilers; but it occurs especially with locomotive boilers, where the safety-valves are pressed down by levers with spring balances at their extremities, and the rising of the valve in blowing off causes a lifting of the lever and a considerable extra extension of the spring balance and consequent increase of pressure upon the valve.

From experiments made by W. Naylor with locomotive boilers, he believes that a clear available opening of $\frac{7}{10}$ of a sq. in. will allow the steam to escape as fast as it can be generated in a large locomotive boiler at a pressure of 120 lbs. to the sq. in., when the engine is not consuming steam by running, and with the help of a steam-jet in the chimney. Taking the theoretical velocity of steam at that pressure issuing into the atmosphere as 1900 ft. a second, the practical velocity of the issuing steam, allowing for its friction in passing the safety-valve and the resistance of the atmosphere into which it has to flow, may be assumed at 70 per cent. of this amount or 1330 ft. per second. This velocity with the above-named opening of $\frac{7}{10}$ of a sq. in. gives a discharge of 11,172 cub. in. of steam passing off per second. Taking the relative volume of steam to water at that pressure as 203 times, this is equivalent to an evaporation of about 12 gallons of water a minute (11·94); or a consumption of about 8 cwt. (7·99) of coal an hour, taking the evaporative duty at 8 lbs. of water the lb. of coal.

The present large locomotive boilers are made some with two safety-valves of 3½ in. diameter,

some with two valves of 4 in. diameter, some with two of 5 in. diameter, and some engines are working with four valves of 3 in. diameter; the valves being loaded by spring balances through levers, or in some cases by a spring acting direct, without the intervention of a lever. When the spring balance and lever are used, the proportions of the lever are generally arranged so that 1 lb. pressure of the balance is equal to 1 lb. the sq. in. on the valve; and then the perpendicular lift of the valve in opening multiplied by the number of square inches in its area gives the distance that the outer end of the lever has to move to allow the required opening of the valve; and this lift of the lever end multiplied by the number of lbs. to the inch in the graduations of the spring balance gives the number of lbs. the square inch of additional load put upon the valve by the act of lifting, and the corresponding increase of pressure necessitated in the steam to admit of its escape through the opening of the valve, in addition to that required for overcoming the friction of the steam in passing the valve and the resistance to it in flowing into the atmosphere.

Taking the case of two valves of 5 in. diameter, giving a combined circumference of 31·4 in., and say 30 lbs. to the inch as the graduation of the spring balances, with a ratio of leverage (or area of valve) of 19·63 to 1, a total area of discharge of $\frac{7}{10}$ sq. in. would require a lift of the valves of $\frac{0{\cdot}7}{31{\cdot}4}$ or ·0223 in.; but as the bearing faces of the valve and seat are not horizontal but inclined at 45°, a vertical lift of the valve equivalent to 1 sq. in. (0·99) annular area is required for giving a discharging area of $\frac{7}{10}$ sq. in.; and the total lift will therefore be ·032 in. This gives an extension of the spring balance of ·032 × 19·63 or ·628 in., causing an extra load upon the valve of ·628 × 30 or 18·8 lbs. a sq. in. in order to get the required opening for discharge of the steam. The result is therefore that, in order to give a sufficient area of opening for the discharge of all the steam that the boiler is capable of generating, the pressure must rise in the boiler about 19 lbs. to the sq. in. above the intended limit of the working pressure, or the point at which the safety-valves are adjusted to begin blowing off; and this action of increasing the total pressure upon the valve as the valve rises is inseparable from all arrangements in which the valve is pressed down by a spring acting either through a constant lever or direct upon the valve.

Naylor's safety-valve has been designed to remove this defect, by causing the spring that presses upon the valve to act not through a constant lever, but through one which varies in its effective length, diminishing in length as the valve rises in the same proportion that the tension of the spring is increased by the rising of the valve, so as to prevent any increase taking place in the total pressure upon the valve.

Naylor's valve is shown in Figs. 2331 to 2334, Fig. 2331 being a vertical section, and Fig. 2332 a sectional plan.

The safety-valve A is only 2 in. diameter inside the seating, and is pressed down by the inverted spiral spring B acting upon the opposite end of the bent lever C, the effective length of lever being $2\frac{1}{2}$ in. at the valve and $1\frac{3}{4}$ in. at the spring. When the valve rises, the bearing point of the spring at the end of the lever, being inclined downwards at an angle of 35° from the vertical

2331.

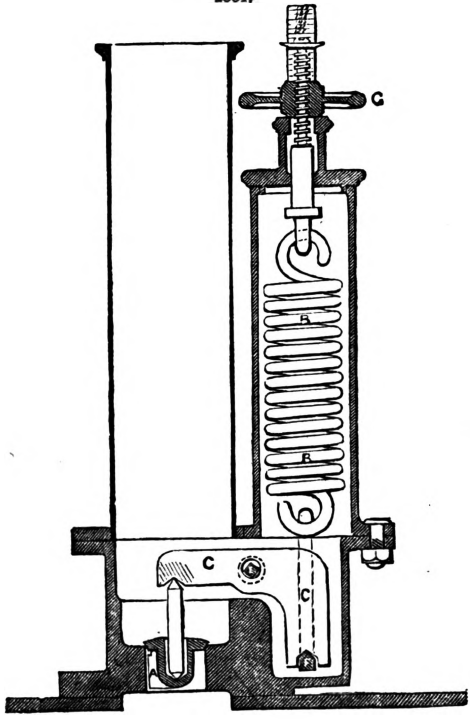

2332.

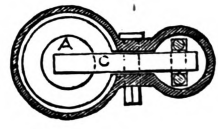

2333.

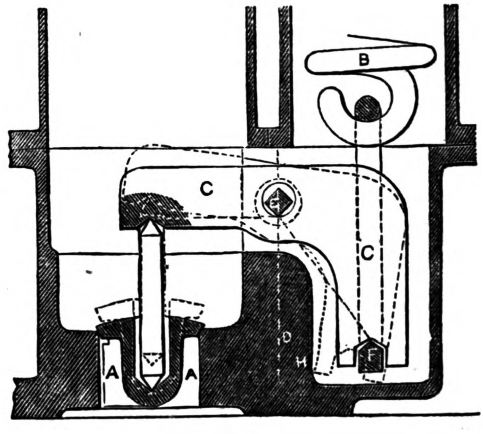

line D in Fig. 2333, is deflected nearer to this vertical line by the lifting of the valve end, as shown by the dotted position in Fig. 2333; and the result is that the effective leverage at which the spring acts is reduced to the extent required to compensate for the increased tension of the

spring caused by the motion of the lever, so that the total pressure upon the valve remains unaltered. The centre E on which the lever works is a knife-edge, so as to prevent its action from being interfered with by friction from the heavy pressure upon it, which is nearly double the pressure of the spring: and the connection of the spring to the lever at F is by a knife-edge also, Figs. 2333, 2334, in order to give complete freedom of action to the whole. The spiral spring is made of $\frac{3}{8}$-in. round steel, and the pressure upon the valve is adjusted by screwing up the spring by the nut G, the highest pressure being limited by a solid collar upon the spindle. Any accident from failure of the spring is provided against by the lower end of the lever then coming in contact with the casing at H, Fig. 2333, which prevents any risk of the valve becoming displaced.

2334.

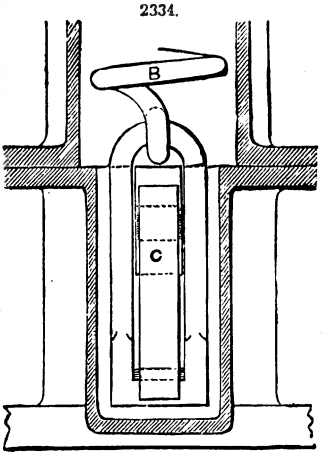

This valve being only 2 in. diameter with a circumference of 6·28 in., the height to which it must be lifted in order to give the same area of discharge as before, $\frac{7}{10}$ of a sq. in., is $\frac{1}{6\cdot28}$ or ·159 in.; and the valve end of the lever being $2\frac{1}{2}$ in. long, this requires an angular movement of the lever of 3° 39′. The angle between the spring end of the lever and the vertical is consequently reduced from 35° to 31° 21′; and taking the horizontal distance $1\frac{3}{4}$ in. or 1·75 in. as the sine of the former angle, the sine of the latter angle will be 1·59 in., making a shortening of ·16 in. in the leverage at which the spring acts. The difference between the cosines of these angles to the same radius, or ·106 in., will be the extension of the spring produced by the same range of motion; and the area of the valve being 3·14 sq. in. the total pressure of the spring to give a pressure upon the valve of 120 lbs. an inch will be 538 lbs. with the original leverage of 1·75 in., and with the reduced leverage of 1·59 in. the total pressure required at the spring is then 593 lbs. Hence an increase of 55 lbs. in the total pressure of the spring has to be produced by the extension of ·106 in. in length caused by the motion of the lever, in order to maintain a constant pressure upon the valve; and this gives 519 lbs. for an inch deflection for the strength of spring required for the purpose.

In practice the spring is adjusted so as to give a slightly reduced total pressure upon the valve when fully open, the pressure the square inch on the valve being made about 4 per cent. less when the valve is blowing off strongly than when the valve is shut; in order to compensate for the effect of the friction of the large quantity of steam passing in that case through the narrow opening of the valve. It has been found by trials with this valve that, when the steam is blowing off very strongly, the pressure within the boiler exceeds the load upon the valve by about 5 per cent.; and therefore by proportioning it as above with 4 per cent. less pressure of the spring upon the valve when open than when closed, the occurrence of any sensible increase of pressure within the boiler beyond the limit at which the valve is set is completely prevented. At the same time it is found that the valve closes again after blowing off strongly, without allowing any sensible fall in the boiler pressure below that limit.

This improved valve therefore effectually provides for the prevention of any increase of pressure occurring under any circumstances in the boiler beyond the intended limit of pressure; and the one valve, although only 2 in. diameter, gives the full area for discharge of the steam obtained with the two large valves ordinarily used. The one valve may consequently be considered as fully equivalent in safety to the two ordinary valves, although it may be preferred still to adopt the precaution of employing two valves.

In the case of the two ordinary safety-valves of 4 in. diameter, having a combined circumference of 25·1 in., and a ratio of leverage of 12·57 to 1, a total increase of pressure of 15·0 lbs. the sq. in. will be caused in giving the required full area of opening of $\frac{7}{10}$ sq. in. for discharge. And with two valves of 3 in. diameter, having a combined circumference of 18·8 in., and a ratio of leverage of 7·07 to 1, the total increase of pressure will be 11·3 lbs. per sq. in.

It appears therefore that, with the ordinary construction of safety-valves, the larger size of valves, instead of giving increased freedom to the discharge of the steam, are actually inferior in this respect to the smaller valves, the two 5-in. valves allowing an increase of pressure of 18·8 lbs. to the inch during the escape of the steam, whilst the two 3-in. valves allow only 11·3 lbs. an inch increase with the same discharge. This arises from the circumstance that the pressure required to hold down the valve increases as its area or as the square of its diameter, whilst its area for discharge increases only as its circumference or directly as its diameter. This result is also not altered in the cases where, instead of using a lever with a spring balance at the end, a large spiral spring is employed pressing direct upon the valve, or between two valves, the pressure of the spring and its motion being then the same as those of the valve, instead of the pressure of the spring being diminished and its motion increased both in the same ratio by the action of the lever.

This valve possesses an advantage over most forms of the ordinary valves, from the circumstance that it is quite impossible for the valve to be tampered with by the engine-driver, so as to increase the pressure beyond the intended limit.

One cause of extra pressure in locomotive boilers occurs when an engine is proceeding with a train, with the steam well up and a good fire, and it is suddenly checked by a danger signal being exhibited, and the engine has to be reversed. In such a case, whilst the fire is generating steam vigorously, the cylinders, instead of using it, are converted into air-pumps, pumping air into the boiler at every stroke. The steam generated must all pass off by the safety-valves, and the pressure often rises considerably above the limit at which they are adjusted.

When an engine is taking a heavy load up an incline slowly, the steam blowing off strongly, as

much as 40 lbs. excess of pressure has occurred, without the safety-valves being interfered with. Naylor instances a case of a large goods engine coming to a stand on an incline from want of power, although the steam was blowing off very strongly; and the driver being afraid to go back from fear of a collision, had to secure the valves against blowing off, by pegging down the levers in the slots through which they passed in the weatherboard. The regular working pressure was 120 lbs., but the steam got up to 180 lbs. an inch by the pressure gauge, and the engine was then able to take the train to the top of the incline.

Another source of risk of extra pressure is when an engine is having the steam got up in the engine shed, and to hasten it the steam jet has been put on and left on while the fire-lighter is gone to look after other engines. From a number of experiments Naylor has ascertained that, if the jet be left full on for six minutes after the steam begins to blow off, there will be an excess of pressure in the boiler of at least 30 lbs. a square inch over what the safety-valves on the ordinary construction are loaded at.

In the case of marine boilers it is required by the Government regulations that there shall be at least one safety-valve upon each boiler loaded direct by weights, and that the area of this valve shall be one circular inch for every horse-power nominal; so that a boiler supplying steam equal to 100 horse-power requires a safety-valve 10 in. diameter. But although these valves are loaded by direct weights, the pressure in the boiler will necessarily exceed the load on the valve when the steam is blowing off in great force, which is liable to occur occasionally when the engines are stopped, from neglect in not easing the pressure at that time. There is, however, a serious defect in this mode of loading safety-valves on marine boilers, from the circumstance that when the vessel rolls the pressure of the weight is diminished; and if it rolls to the extent of 45° there will not be more than 70 per cent. of the full load upon the valves at that moment, and consequently there will be a loss of power when the greatest power may be required. Moreover the water in the boiler is subjected to violent commotion by the repeated starts of ebullition from the pressure being suddenly reduced by the lifting of the safety-valve; and this commotion is not at all times stopped by the closing of the valve, but produces priming in the cylinders. With the improved valve, shown by the sections Figs. 2335, 2336, however, the full pressure would be preserved steadily in the boilers, with any extent of rolling of the vessel.

2335.

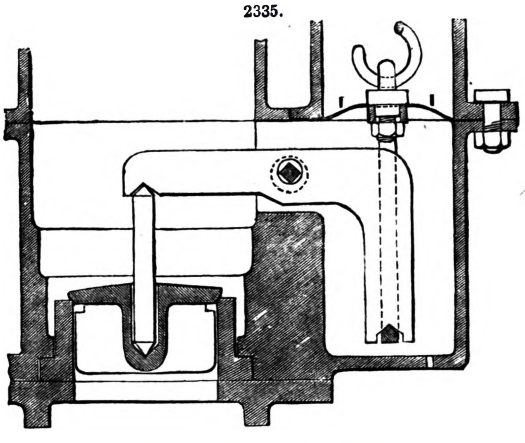

2336.

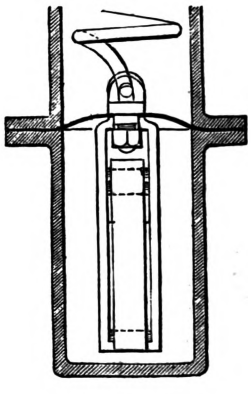

Ashcroft's Lock Safety-Valve.—Fig. 2337 is a perspective view of the valve and its parts, with one side of the case removed, and a portion of the covering of the valve seats broken away, to show the internal construction. Fig. 2338 is an enlarged view of the valve and its seats. The main peculiarities of this valve are in its having a double seat, and offering a much freer egress to the steam than the single disk valve. By reference more particularly to Fig. 2338, these peculiarities may be noticed. The valve itself is hollow, and has an annular space between the two seats, into which, as well as into its central cavity, the steam may pass. The shell that encloses it, and forms its seats, has radial projections, between which are spaces serving as passages for the escaping steam. Fig. 2338 shows the valve lifted from its seat, the arrows showing the direction taken by the escaping steam. A is the valve, and B the seats.

Fig. 2337 shows a guard-plate C, placed in front of the escape pipe D, to prevent tampering with the valve. E is a bolt securing the halves of the case together, and having a hole through it for the reception of the staple of the lock. F is a cam for lifting the lever and the weight G. The cap H, over the valve, serves as a guide to the valve stem, and prevents the steam from escaping into the lock-box.

Marine-Engine Governor, invented by Peter Jensen, of Copenhagen.—The engines in very large screw-steamers with deep draught are considered to work with sufficient regularity even in a gale, as the size and weight of the ship to a great extent prevent it from pitching, and for this reason no great difference in the depth of immersion of the screw takes place; but, except in the above case, serious irregularity is experienced in the working of marine engines in a heavy sea, when the screw or the paddle-wheels are one moment deeply immersed and the next moment revolving half or more in the air. A waste of power then occurs; for although in a given time the same amount of power is supplied from the boiler, whatever the speed of the engines may be at any moment, still the power is not exerted in an advantageous manner whenever the propeller is only partially immersed, as it then presents too little surface of resistance to the water, and is consequently not

able to propel the vessel so efficiently as when immersed to the proper depth. In most marine engines, therefore, instead of the consumption of steam being reduced by saving the steam when it

2337.

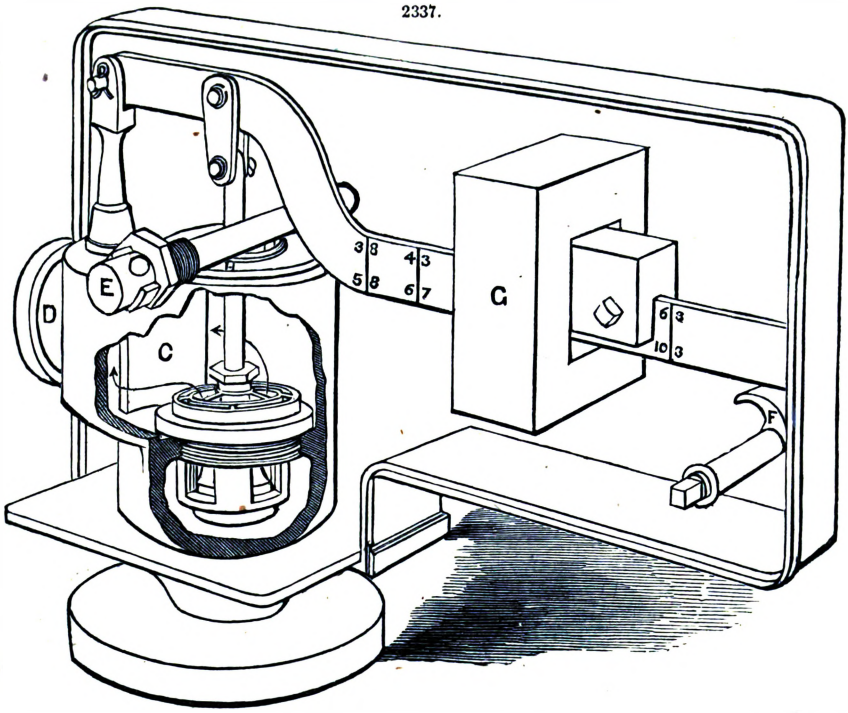

cannot be used to advantage in consequence of the propeller being only partially immersed, it is at that time wasted in driving the screw or the paddle-wheels with great speed in a light draught of water, and a great amount of slip or loss in effective speed of the vessel consequently ensues. In applying a governor to marine engines economy of power must result, as in the case of stationary engines. Moreover, most of the accidents occurring to marine engines are due to the sudden shocks that will happen during a gale even in well-balanced engines. The lubrication is also often rendered difficult, because the oil is thrown out of the cups; and the great amount of wear and tear in marine engines may be attributed partly to the shocks and the irregular motion, and partly to the more imperfect lubrication.

2338.

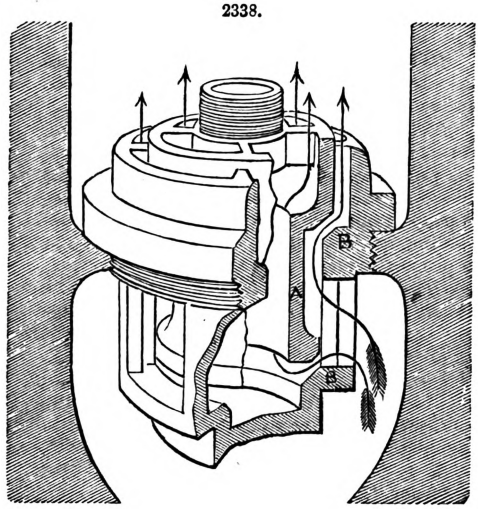

Marine-engine governors have been attempted on several occasions, but only very few are yet applied. An ingenious modification of the ordinary Watt's centrifugal governor has been employed for this purpose, Silver's four-ball governor, in which the action of a spiral spring is substituted for that of gravity, and the whole apparatus is balanced so as to remain undisturbed in action during the pitching of the vessel. But the mode of action of all such governors is by checking the supply of steam to control the speed of the engine *after* it has begun to change either to quicker or slower; and it has appeared to the inventor of the governor forming the subject of the present paper, that the principal desideratum in a good marine-engine governor is an instantaneous action, so that whenever the screw or the paddle-wheels are going down in the water more steam may be admitted to the engines as quickly as possible, and in the opposite case the admission of steam may be as quickly as possible checked, *before* the speed of the engines has been sensibly affected. For attaining this object it seems more natural to make use of the cause of the evil as a remedy against it, or to employ the irregular motion of the vessel as a means of regulating the engines, than to let the engines regulate themselves. By this means an intermediate step is dispensed with; and by making use of the non-elastic water as the motive power of the governor, the action will be exerted quickly enough upon the engines to regulate the supply of steam before the depth of immersion of the propeller has been materially altered by the pitching of the vessel.

The construction of Jensen's marine-engine governor is shown in Figs. 2339 to 2341. Fig. 2339 is a transverse section of the vessel showing the governor in position; and Figs. 2340, 2341, are a longitudinal section and elevation of the governor enlarged.

A cylinder A is placed at each inner side of the vessel below the water-line, the bottom of the

cylinders communicating with the water outside by means of the Kingston valves B. Each cylinder is fitted with a piston C, which is loaded with a spring D either of steel, compressed air,

2339.

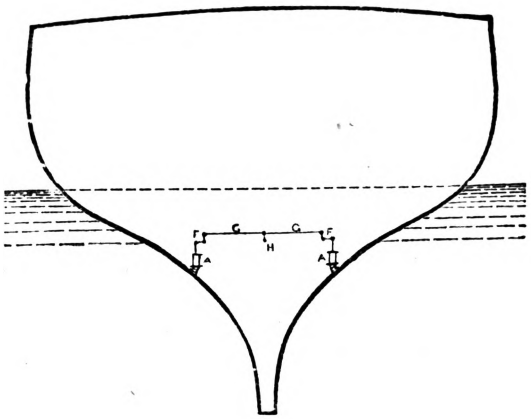

2340.

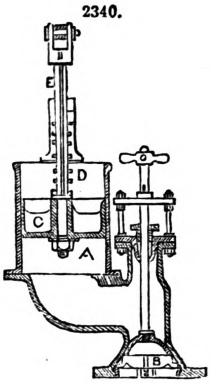

2341.

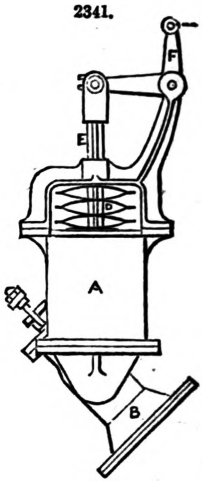

or india-rubber. The piston-rods E act upon bell-crank levers F F, and by means of connecting-rods G G motion is given to a common spindle H, from which the throttle valves of the engines are worked in such a manner that when the pistons C go down the throttle valves are closing, and when the pistons go up the valves are opening. Now as the pressure of the external water increases in proportion to the depth, when the openings of the valves B come into different depths in consequence of the pitching or rolling of the vessel, the pressure on the pistons C will be changed proportionately; and to each pressure will correspond a certain position of the pistons and of the throttle valves connected with them. Omitting the pitching of the vessel in a paddle-wheel steamer and considering only the rolling motion, it is obvious that when one paddle-wheel is deeply immersed and the other nearly or entirely out of the water, the pressure on the two pistons will be different; but supposing them connected together, the position of both and of the throttle valves will be then corresponding to the difference of resistance on the two paddle-wheels.

If these cylinders are placed as near to the propeller as convenient, so as to ensure pretty nearly the same depth of immersion, it will be seen that this apparatus will then act as a governor for the engines; for when the propeller is revolving in a light draught of water, the supply of steam to the engines is proportionately diminished; and when revolving in deep water, the supply of steam is proportionately increased.

2342.

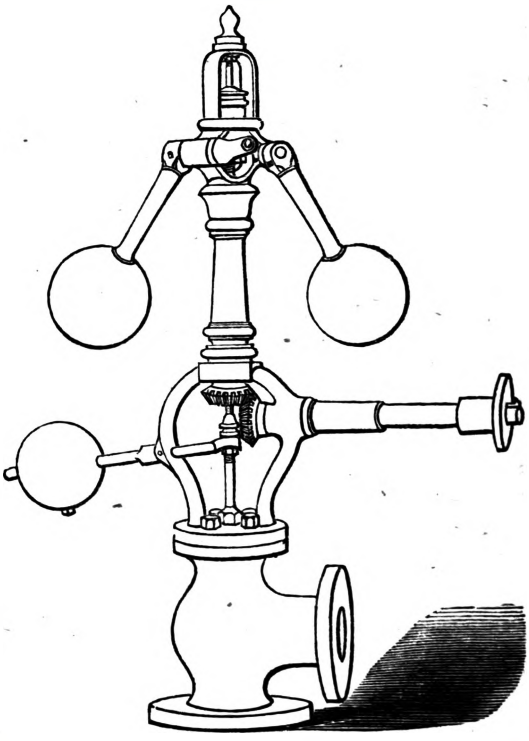

Harmonizing Governor, Fig. 2342.—The nature of this invention consists in swinging the balls of a centrifugal governor, at an angle to a radial line, harmonizing with and corresponding to the motion of said balls, in such manner that the inertia, the momentum, and centrifugal force, all act in favour of the governor, instead of against it, as is the case in the ordinary centrifugal governor. *Angular Motion*, p. 101.

This is illustrated in Fig. 2343. A circle B is struck, of nearly the size of the ball. A square is then formed by drawing lines tangentially with the circles, as shown by dotted lines. This square gives the plan of the governor. C is the point of suspension of the arm; the line from C to D represents the arm, as also the direction of the swing of the ball. The lines from C to E constitute the centres of the pins upon which the arms F and links G are firmly fixed. The pins connecting F and G turn freely in sockets C E. Links G form a connection with a stem passing through the centre of the valve. Links G may also turn outward, as shown at H, and form a connection with a sliding sleeve. The sockets C E are firmly secured to the shaft giving them motion. The angle of the plane in which the balls swing is indicated by the dotted radial line I. Balls vibrating at

this angle will swing freely whether moving quickly or slowly; if moved slowly, they will be acted upon by but little centrifugal force, and will swing

2343.

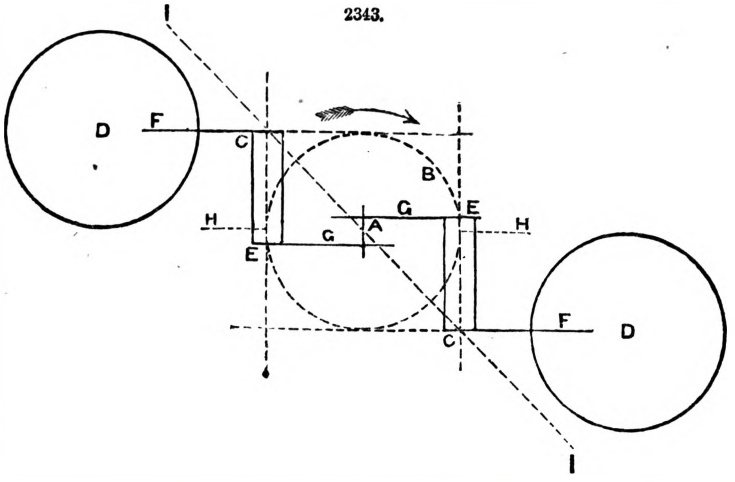

higher and farther out, though quite freely, without causing the least binding or friction at the joints, by which the arms are suspended. The balls are at liberty to fall to the rear of the points of suspension, or to gain upon said points, according as the force of their inertia or their momentum predominates. By this arrangement we obtain a governor the most simple and cheap of construction, beautiful in form, and in action, durability, and efficiency the most complete.

The Valve.—Much difficulty is experienced from improperly-constructed valves, many valves being so constructed that large surfaces slide upon and against each other. The contact of these surfaces is expected to be steam-tight, and yet freely move against each other. This is a mechanical impossibility; if such valve is anything like steam-tight, it will require a great force to move it; and should it gum or expand the least, it will stick so tight as to require a sledge to move it. If it is made to move freely, steam will pass between the surfaces, and in a short time cut a passage around the valve, instead of passing through it. Such valves should never be put on engines. The valve attached to this governor is so constructed that its opening and closing do not depend upon surfaces moving upon or against each other, but upon surfaces moving towards and from each other. The impact of the passing stream is not upon and over the surfaces that are depended upon for closing the valve, consequently the cutting of the valve by the steam will never cause it to leak. The valve has two steam passages perfectly balancing each other. The steam can never make for itself false passages, as there are no joint or openings but the proper passages for the steam.

Graduating Valves.—An idea has been entertained that a valve should have an increased opening, tapering towards a point. Such valve will, as is intended, supply steam to the engine in a ratio differing from that of the action of the governor. To graduate the quantity of steam to the engine is especially the office of the governor, and any attempt to effect it in the valve acknowledges the deficiency of the governor. If the valve openings are proportioned to the supply-pipe, a good governor will do all the graduating. The effect of a taper valve is but to lengthen the throw of the valve. This becomes necessary from the defects of the radial centrifugal governor, as it never acts at the proper time and always with a plunge beyond the proper point. For this reason the valve openings are made close, requiring a long throw, so that the defective governor will not at one moment cut all the steam off, and the next throw it all on. Hence a graduating valve.

The Governor as a Cut-off.—A good governor combined with a properly-constructed valve constitutes perhaps the best variable cut-off made. The capacity of the valve should equal that of the pipe; the openings should be perfectly straight across without the least taper. Such a valve will require but very little throw, and a governor acting positively and simultaneously with any change of speed in the engine will either cut off all the steam when required, or give the boiler pressure of the steam from a change of speed impossible to be detected by the eye. With the usual variable cut-off the steam may be cut off near the beginning of the stroke, and no steam can be admitted until the beginning of the next stroke. If a heavy load be thrown on the engine immediately after the steam is cut off near the beginning of the stroke, the speed of the engine will be dragged down before steam can be admitted after passing the centre.

Locomotive-Boiler Mountings designed by W. Stroudley.—Figs. 2344 to 2352 illustrate a number of examples of locomotive-boiler mountings of patterns which have been successfully used for some time past by W. Stroudley, the locomotive superintendent of the Highland Railway, and which have also been adopted on other lines. The main features in these mountings are the external screws by which the cocks are closed and opened, and the arrangement of double-faced valves which render packing unnecessary. Referring to Fig. 2344, for instance, which represents a set of gauge-glass fittings, it will be seen from the sectional plan that the conical back of the valve when the latter is open makes a tight joint against a face provided for it, and thus prevents the passage of the steam or water past the valve spindle. In this instance, also, the back seating of the valve is, in the case of the lower fitting, so constructed that when the valve is screwed partially forward, a communication is opened between the gauge-glass and the waste-pipe. The screw by which the valve is moved is square-threaded, and is 2 in. in diameter outside, and ¼-in. pitch. From its

position it can be readily oiled and kept in order, and as its threads have ample surface, the wear that goes on is very small.

Fig. 2345 shows an injector steam-cock with a clear bore of 1½ in., and as in this case it is desirable that the cock may be opened quickly, the screw, which is 2¾ in. in diameter outside, is double threaded, and is of ¾-in. pitch. Another smaller injector steam-cock with ¾-in. bore, is shown by Fig. 2347, the opening screw, which is double threaded in this case also, being 2¼ in. in diameter outside, and ½-in. pitch. The tallow cock shown by Fig. 2346, the blow-off cock shown

2344.

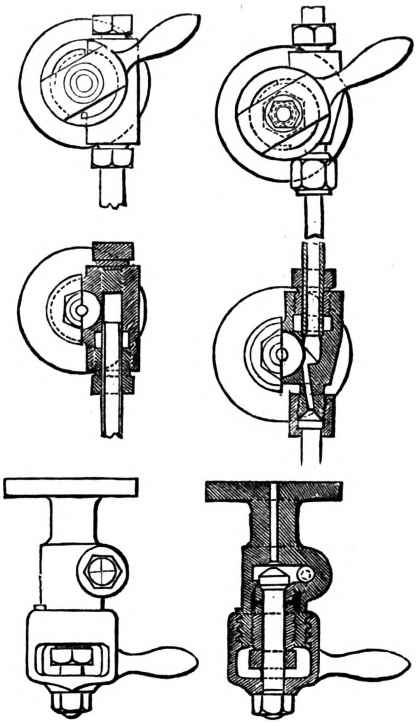

2345.

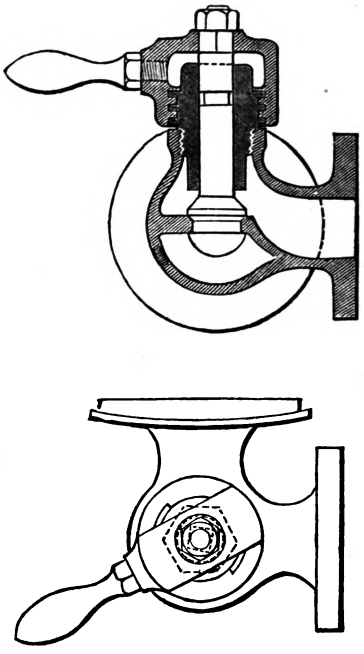

2346

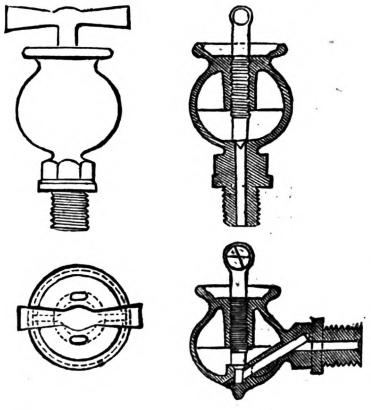

2347.

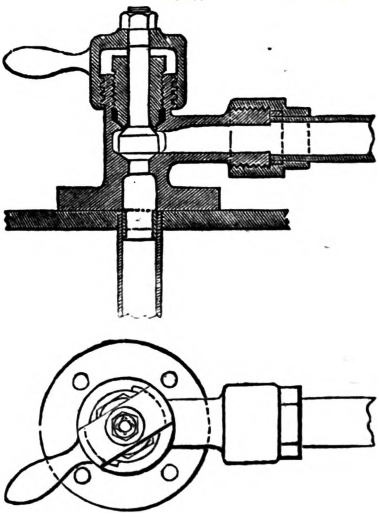

by Fig. 2348, and the blow-cock, gauge-cock, and mud-plug, represented by Figs. 2350, 2351, and 2352 respectively, will require no special description, as their construction is clearly shown by the engravings. We may, however, point out that in the case of the blow-off and gauge cocks, Stroudley uses V-threaded screws.

In the case of the clack-box shown by Fig. 2349, it will be noticed that Stroudley places the joint face on the under-side of the screw, and the steam and water are thus prevented from getting

access to the latter. By this means all the difficulties incidental to screwed covers of the ordinary kind, such, for instance, as the sticking and furring up of the screws, is avoided, and Stroudley found that the covers thus constructed suited well.

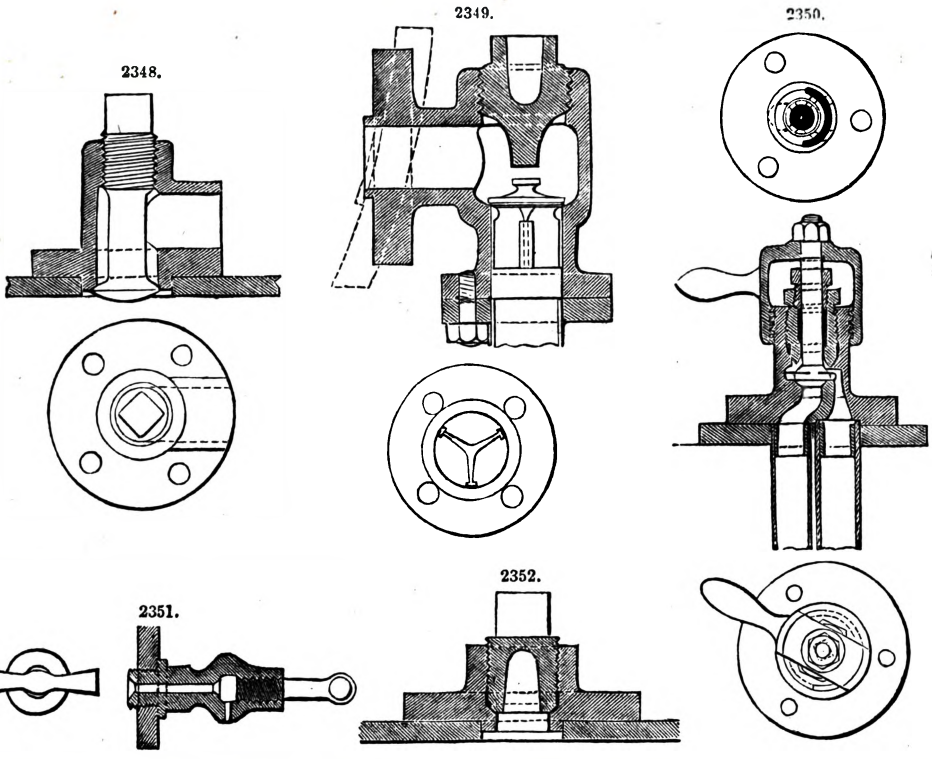

Manhole Cover.—It is not entirely to the amount of metal cut away that the weakness of an unguarded manhole is due the action of the cover plays an important part in the matter. The covers are generally placed internally, and are held up by the steam pressure within, as well as being suspended from arched bridges outside by bolts and nuts. The joint is very seldom a good one, the curve of the cover does not always follow that of the boiler, and as the surfaces of the plates at the joint are not dressed smooth so as to make a tolerably tight joint, a considerable strain is frequently brought on the bolts. Hence we get the bolts pulling and the steam pushing at the plate, the result of the joint action tending, of course, to force the cover through the manhole, and rend the boiler plates. The importance of strengthening the manhole with a mouthpiece and otherwise rendering it safe is therefore very apparent; it is a remedial or rather a preventive measure, very easy of adoption. To this matter Joseph Ride has given his attention, and has invented an improved manhole cover which we illustrate, Figs. 2353, 2354. This cover has been

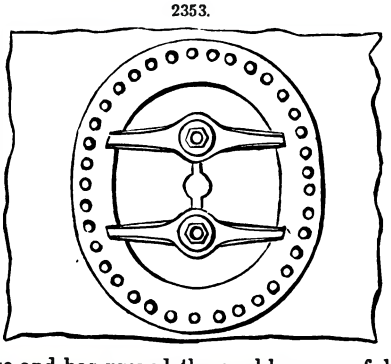

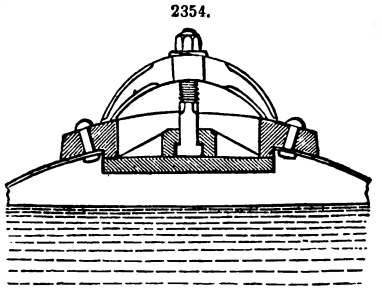

in use and has proved thoroughly successful. The cover fits against the inside with a faced joint, and cannot be taken off while there is any pressure of steam in the boiler; and the strong ring, forming the outer part, strengthens the shell of the boiler, thus preventing accident through fracture of the manhole plate of the boiler.

A Manometer is an instrument for measuring the rarity, or, what amounts to the same thing, the elastic force of gases, and especially that of steam in boilers. There are three principal kinds; *free air*, *compressed air*, and *metallic* manometers.

A free air manometer is an inverted siphon A M B, Fig. 2355, one end A of which opens into the boiler and the other end B into the air. The lower portion of the tube is filled with mercury up to a height C or C′ which is the same in both branches so long as the pressure in the boiler is

equal to the pressure of the atmosphere. But if the pressure of the steam exceeds one atmosphere, the level sinks by a certain quantity C D in the adjacent branch, and rises in the other branch by a quantity C′ D′, which is equal to C D if the diameters of both branches are equal. The excess of the pressure of the steam over that of the atmosphere is measured by the difference of level in the two branches; and if we denote the pressure of the steam to the square mètre by P, that of the atmosphere by P_0, the weight of the cubic mètre of mercury by Π, and the height D D′ by $2h$, we have

$$\frac{P}{\Pi} = \frac{P_0}{\Pi} + 2h. \qquad [1]$$

The quotients $\frac{P}{\Pi}$ and $\frac{P_0}{\Pi}$ express the heights of the columns of mercury, the weight of which would be equivalent to the pressures P and P_0; calling these H and H_0, we may write

$$H = H_0 + 2h. \qquad [2]$$

The employment of this kind of manometer is prescribed in France by the administrative regulations of 1843. It is, however, open to the objection of requiring a great height when the pressure in the boiler is considerable, for the distance D D′ must be equal to as many times $0^m \cdot 76$ as there are units in the number of atmospheres expressing the excess of the measured pressure above that of the atmosphere. Since the date above alluded to, MM. Thomas and Laurens have removed this defect by giving the ascension tube a greater diameter than the rest of the manometrical tube. This arrangement is represented in Fig. 2356; *a b* and *c d* are the two branches of the iron siphon from 5 to 6 millimètres in diameter. The branch or arm *a b* which communicates with the boiler is surmounted by a cast-iron cylinder A A, which receives the condensed steam, and which is always filled with water. The arm *c d* is surmounted by a tube of thick glass B B, the inner section of which is five or six times greater than that of the siphon; affixed to this tube is a graduated scale *l l*. In communication with the upper portion of the tube is an iron pipe D D, closed at the bottom and pierced with an orifice O in its upper portion. This pipe is intended to receive the mercury in case the excess of pressure should raise the level *n* above the ordinary limit and force the liquid out of the tube B B. The effect of the enlarged section in the upper part of the siphon is obvious. If, for example, the section of the tube B B is five or six times greater than that of the arm *a b*, when the increased pressure forces the mercury down this arm by a quantity *h*, it will rise in the tube B B only $\frac{1}{5}h$; and the manometer thus modified will require much less space. Formula [2] may be easily modified to render it applicable to this arrangement; but it is better to graduate the scale *l l* by means of a standard manometer.

2355.

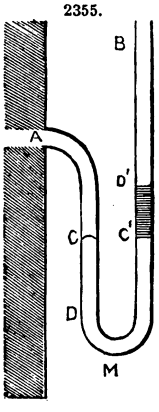

2356.

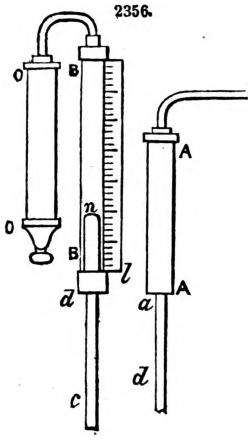

2357.

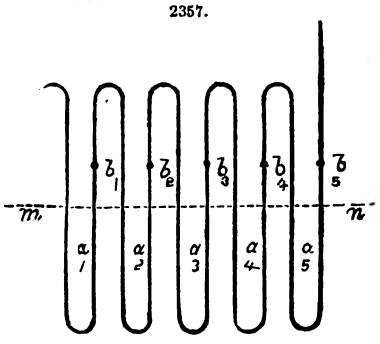

Richard has adopted another arrangement for reducing the height of the manometer, founded upon a principle long known, but which he has happily applied. This arrangement consists in bending the tube a number of times, as shown in Fig. 2357. In the natural state, that is, when the pressure in the boiler is equal to the atmospheric pressure, all the tubes are filled with mercury in their lower portions up to the same level *m n* which divides them into nearly two equal parts, and the upper curves are filled with water. When the pressure in the boiler increases, the level of the mercury in the adjacent tube sinks by a quantity *h* and stands at a_1; it rises in consequence in the next branch by an equal quantity and stands at b_1; it sinks by *h* in the third branch and stands at a_2; it rises by *h* in the fourth and stands at b_2; and so on through the other branches, till it stands in the last at b_5. Let $P_1, P_2, P_3, \ldots$, be the values of the pressures to the mètre at the points $a_1, a_2, a_3, \ldots$; $P_1, P_2, P_3, \ldots$, the values of the pressure at the points $b_1, b_2, b_3, \ldots$; Π the weight of the cubic mètre of mercury, and Q the weight of the cubic mètre of water. Considering the levels a_1, b_1, a_2, we shall have $P_1 = p_1 + \Pi . 2h$ and $P_2 = p_1 + Q . 2h$, whence

$$P_1 - P_2 = (\Pi - Q) . 2h.$$

We find in like manner

$$P_2 - P_3 = (\Pi - Q) . 2h,$$
$$P_3 - P_4 = (\Pi - Q) . 2h,$$
$$P_4 - P_5 = (\Pi - Q) . 2h;$$

whence adding member by member,

$$P_1 - P_5 = 4(\Pi - Q).2h.$$

We have again $P_5 - p_5 = \Pi\ 2h,$

or $$\frac{P_1}{\Pi} - \frac{p_5}{\Pi} = 2h\left[1 + 4\left(1 - \frac{Q}{\Pi}\right)\right],$$

or, substituting for $\frac{Q}{\Pi}$ its value $\frac{1}{13{\cdot}6}$,

$$\frac{P_1}{\Pi} - \frac{p_5}{\Pi} = 2h[1 + 4 \times 0{\cdot}926], \qquad [3]$$

a formula which will enable us to calculate the pressure P_1 of the steam knowing the height h, or to determine, on the contrary, this height knowing the pressure P_1. It may be remarked that the number 4 which multiplies $1 - \frac{Q}{\Pi}$ is the number of the lower curves of the tube diminished by unity; so that calling this number of curves n, the height of the mercury measuring the pressure in the boiler H and that measuring the atmospheric pressure H, we shall have generally

$$H = H + 2h[1 + 0{\cdot}926(n - 1)]. \qquad [4]$$

A compressed-air manometer is also an inverted siphon, having one arm closed while the other is in communication with the boiler. Fig. 2358 represents the usual arrangement of this apparatus.

When the pressure in the boiler is equal to the pressure of the atmosphere, the mercury is at the same level $m\,n$ in the two arms. When the pressure increases in the boiler, the level is depressed by a quantity h in the adjacent arm, and stands at B, it is, consequently, raised by an equal quantity in the other arm and stands at A, the air in this arm being compressed by the rising of the mercury. If P denote the pressure in the boiler, and P_0 the pressure of the atmosphere, we have first as the pressure at A after compression, $P_0 \frac{Y}{Y - h}$, Y representing the height of the closed tube above the level $m\,n$. Consequently,

2358.

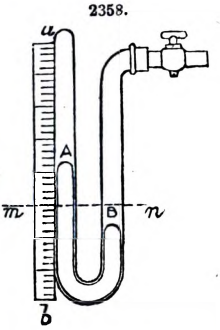

2359.

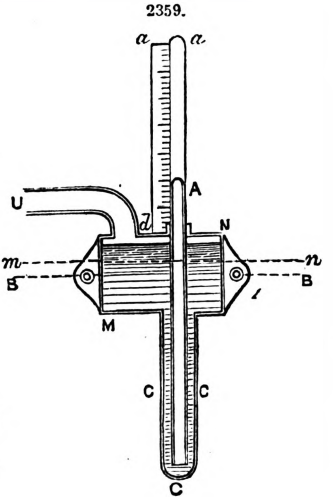

$$P = P_0 \frac{Y}{Y - h} + 2Hh,$$

$$\text{or} \quad \frac{P}{\Pi} = \frac{P_0}{\Pi} \frac{Y}{Y - h} + 2h, \qquad [5]$$

$$\text{or} \quad H = H_0 \frac{Y}{Y - h} + 2h, \qquad [6]$$

a formula enabling us to calculate H or h knowing one of these quantities.

The closed arm is provided with a scale $a\,b$, which may be graduated by means of formula [6] or by comparing it with a standard manometer.

These compressed-air manometers are sometimes arranged, as shown in Fig. 2359. M N is an iron receptacle communicating with the boiler through the pipe U. This receptacle is provided on its lower side with a kind of bulb C C C, into which the manometrical tube D D, which is closed at the top, plunges. The receptacle being partly filled with mercury, the pressure of the steam depresses the level of the mercury in the receptacle by forcing it up through the tube which is provided with a scale $a\,b$. Supposing $m\,n$ the level of the mercury when the pressure in the boiler is equal to the pressure of the atmosphere, if the level sinks by z in the box M N, it will rise by $n\,z$ in the tube, n denoting the ratio of the sections, Ω and ω of the box and of the tube. We shall have, therefore, $P = P_0 \frac{Y}{Y - nz} + (n + 1)\ z\,.\,\Pi$, or making $nz = h$, dividing by Π and substituting for n its value $\frac{\Omega}{\omega}$,

$$\frac{P}{\Pi} = \frac{P_0}{\Pi} \cdot \frac{Y}{Y - h} + \left(1 + \frac{\Omega}{\omega}\right)h,$$

$$\text{or again,} \quad H = H_0 \cdot \frac{Y}{Y - h} + \left(1 + \frac{\Omega}{\omega}\right)h. \qquad [7]$$

The indications of the manometer ought strictly to undergo correction relative to the change of temperature. But, as a variation of 15° occasions an error of only $\frac{1}{270}$, and as extreme accuracy in measuring the pressure is never necessary, this source of error is usually neglected. Yet, if is be required to take the temperature into account, we may proceed as follows;—

Taking the arrangement of Fig. 2359, let y be the volume occupied by the compressed air at a given moment, or the number of divisions which it occupies in the tube, and p the pressure of this gas to the square mètre. We shall have, putting t for the temperature and α for the

coefficient of expansion, $p = 10334^k \cdot \frac{Y}{y}(1 + at)$, Y being the volume of the same gas at zero and under the pressure of $0^m \cdot 76$ of mercury. Let H be the height of the column of mercury above the level of the bulb. This height, observed at the temperature t, would be at zero $\frac{H}{1 + \frac{t}{5550}}$ or $\frac{H}{1 + 0 \cdot 00018\, t}$. The weight of a column of mercury having this height and a base of 1 square mètre would be $\frac{13598^k \cdot H}{1 + 0 \cdot 00018\, t}$, which is the pressure exerted upon 1 square mètre by the column in question. Hence we have $P = 10334^k \cdot \frac{Y}{y}(1 + at) + \frac{13598^k \cdot H}{1 + 0 \cdot 00018\, t}$, and as the number 10334 is the product of 13598 by 0·76, we may write

$$P = 10334^k \left[(1 + at)\frac{Y}{y} + \cdot \frac{H}{0 \cdot 76} \cdot \frac{1}{1 + 0 \cdot 00018\, t}\right]. \qquad [8]$$

If Y is unknown, it may be determined by experiment, using this very formula [8]. For this purpose we must put the bulb in communication with the atmosphere, observing at the same moment the barometer. P is then equal to the pressure of the atmosphere; we observe y, H and t; all is then known in the formula except Y, the value of which we may thus determine once for all. If Z is the barometrical height observed, we have $P = 10334 \cdot \frac{Z}{0 \cdot 76}$; substituting this value, the number 10334 vanishes from the formula, which enables us to find Y more easily.

The compressed-air manometer is open to a grave objection; the oxygen of the air contained in the manometrical tube is gradually absorbed by the mercury, which becomes oxidized; the volume of compressed air diminishes, and the instrument indicates too great a pressure. The gas having no influence upon the mercury, might be substituted for the air. But their fragility and great cost have led to the gradual abandonment of air manometers, and to the substitution of a less accurate instrument, but one that is less liable to injury and much cheaper, namely, the metallic manometer.

2360.

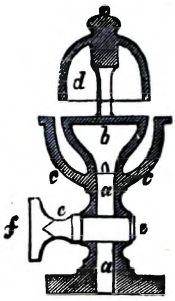

Steam Whistle.—An apparatus attached to a steam-engine, through which steam is rapidly discharged, producing a loud shrill whistle, which serves as a warning or signal. In Fig. 2360, a is a tube, b hollow piece, $c\,c$ cup, d thin brass cup, and $e\,f$ stop-cock. The steam issues from a narrow annular orifice around the upper edge of the lower cup or hemisphere, striking the thin edge of the bell above it, and producing sound in the manner of an organ-pipe or common whistle.

Connecting-Rod for Clayton and Shuttleworth's Portable Engine, see p 33.

2361.

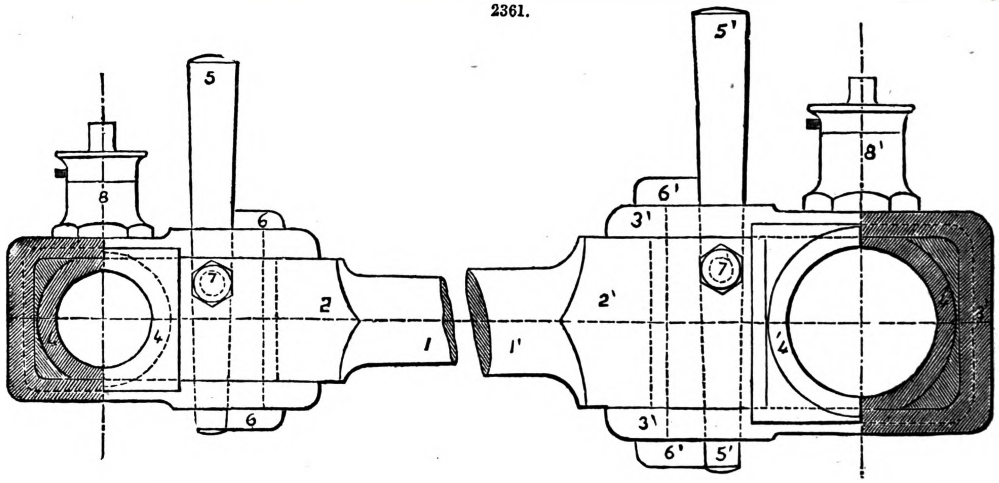

2362.

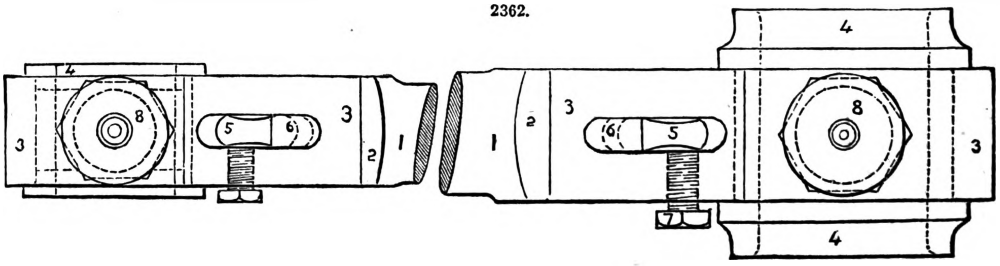

References:—1, Turned middle part of rod. 2, Shaped end. 3, Strap. 4, Brass. 5, Cottar. 6, Gib. 7, Set screw to secure cottar after adjustment. 8, Oil-cup with wick and cork.

The large and small ends of this connecting-rod, Figs. 2361, 2362, being similar, differing only in size, the same figures are put to denote similar parts at either end.

Cylinder with Steam-Jacket for Clayton and Shuttleworth's Portable Engine, Figs. 2363 to 2366.

2363.

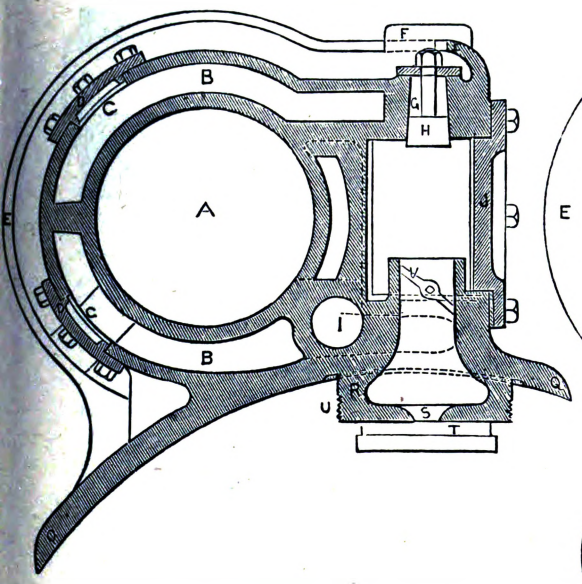

2364.

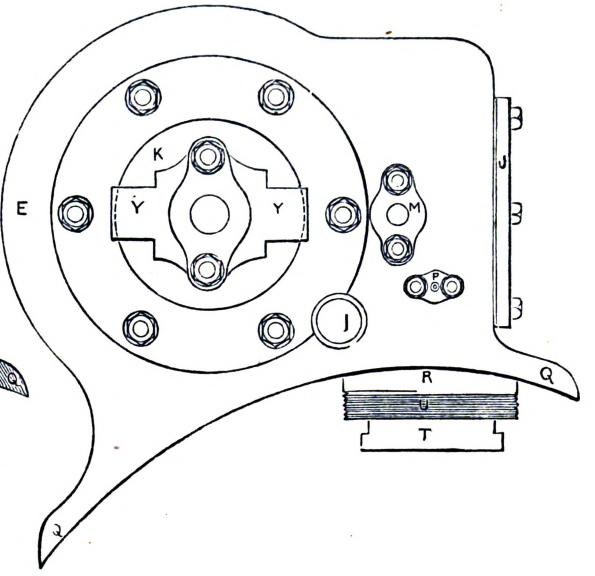

2365.

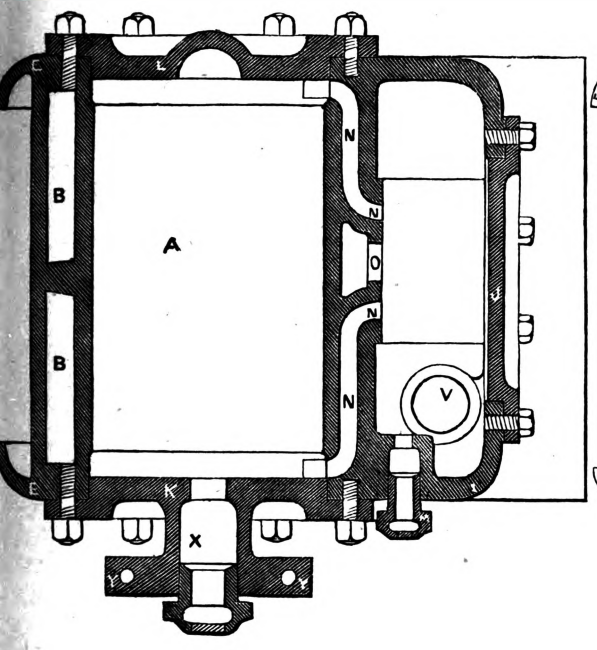

2366.

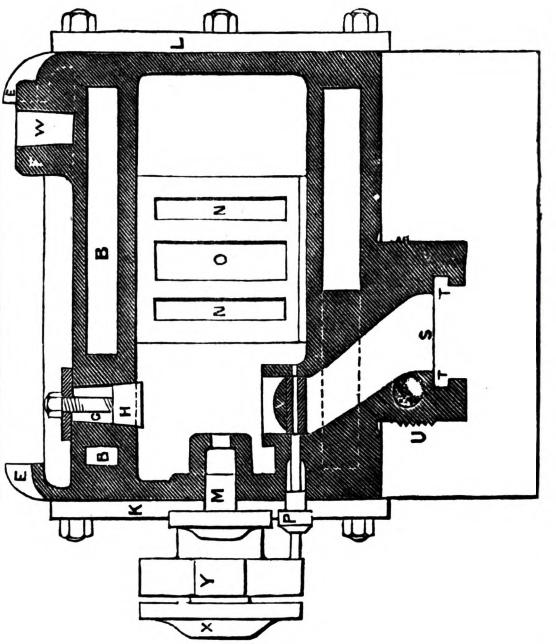

References:—A, Cylinder. B, Steam-jacket. C, Openings for removing the core, provided with steam-tight covers D. E, Projecting flanges to hold the cylinder from lagging. F, Contains socket W for receiving the chimney rest. G, Opening giving access for boring out the steam-pipe in which the throttle valve works. H, Conical plug for closing G steam-tight. I, Exhaust passage. J, Steam-chest cover. K, Front cylinder cover, with gland X for piston-rod and projection Y, to which the slide bars are bolted. L, Back cylinder cover. M, Gland for slide-valve spindle. N, Steam ports and passages. O, Exhaust port. P, Gland for throttle-valve spindle. Q, Bottom of cylinder casting planed to segment of circle to fit barrel of boiler. R, Cylindrical part carrying the stop-valve port S, and having grooves T for stop. T, Valve to slide in. Part R projects through into boiler. U, Screw thread chased on part R for securing the cylinder to the boiler by means of a ring nut, in addition to the usual bolts which pass through the bottom flanges Q. V, Throttle valve. W, Socket for chimney rest. X, Piston-rod gland. Y, Projections from front cylinder cover, to which the four slide bars are bolted.

Crank-Shaft Bracket, Clayton and Shuttleworth's Portable Engine, Figs. 2367, 2368.

2367.

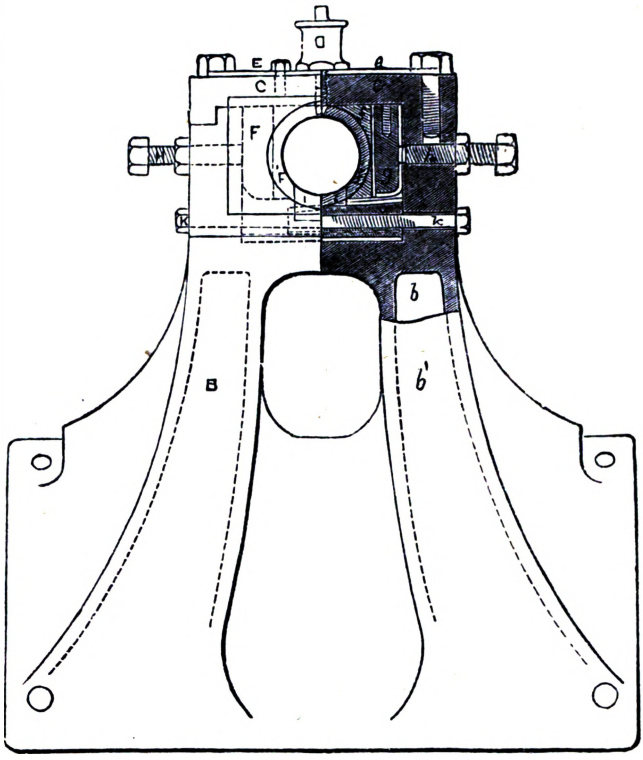

2368.

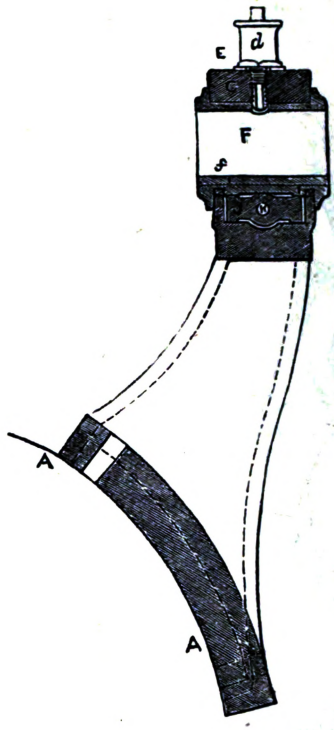

References:—A, Under part of bracket, planed to segment of circle to fit barrel of boiler. *b*, B, Cellular; the parts of which are arranged to give strength and lightness. *c*, C, Cap of bracket. *d*, D, Oil-cup fitted with wick and cork. *e*, E, Thin plate to lock the bolts which fasten the cap *c*, C. *f*, F, Side brasses. *g*, Packing pieces, one to each side brass. *h*, H, Set screws for adjusting side brasses *f*, F. I, Bottom brass. J, Wedge for adjusting bottom brass. *k*, K, Screw bolts for moving adjusting wedge J.

Eccentric.—A contrivance for converting a continuous circular motion into a reciprocating motion. There are several kinds of eccentrics; the *circular*, or eccentric, properly so called, and various other contrivances bearing the name of excentrics, but which are really cams, such as the *heart-shaped eccentric*, the *triangular eccentric*, *eccentrics with a uniformly varied motion*, and so on.

The circular eccentric consists of a circular disc D, Fig. 2369, usually hollowed to diminish its weight. This disc turns about an axis O, perpendicular to its plane, but which does not pass through the centre of the figure C, whence its name excentric. The disc is enclosed by a ring A A, called an *eccentric strap*, moving freely upon the circumference of the disc and connected by rods A′ B, A′ B, called *eccentric rods*, with the extremity B of the piece to which it is required to give a reciprocating motion in the straight line X Y passing through the point O, in the plane of the disc. The distances O C and B C remaining invariable, the point B moves upon the straight line X Y, as if it were connected by means of a connecting-rod of a length B C, to a crank having a length O C and its centre in O. In other words, the circular eccentric is only a variety of the arrangement denoted by the terms connecting-rod and crank. The law of motion will, therefore, be the same; that is, if we draw O H perpendicular to X Y, terminating it at B C produced, we shall have, putting u for the velocity of the point C, and v for that of the point B,

2369.

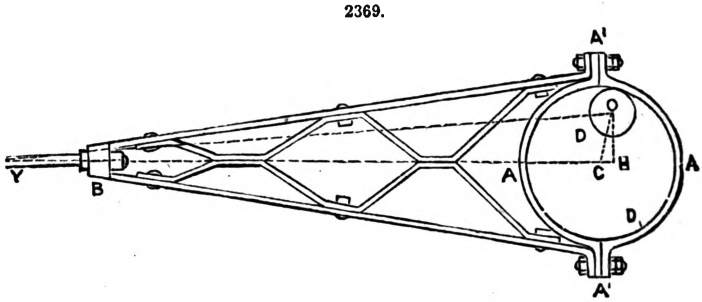

$$\frac{v}{u} = \frac{O\,H}{O\,C}; \qquad [1]$$

so that if u is constant, v is proportional to O H.

The circular eccentric is employed in steam-engines to work the slide-valves. The large amount of friction produced between the sheave and its strap renders the application of this eccentric impracticable in cases in which it is required to transmit a great force. The same may be said of all contrivances bearing the name of eccentrics; they are applicable only when the force to be transmitted is small.

Another way of employing the circular disc to produce a reciprocating motion is to make it turn about a point O, Fig. 2370, taken on its circumference; and, instead of enclosing it in a ring, it is made to revolve in a rectangular frame A B, A′ B′, with two parallel sides of which it is constantly in contact. A rod fixed in the middle I and I′ of these sides, and passing between guides G and G′, receives thus a reciprocating motion the extent of which is the diameter of the disc. The law of the motion is easily obtained. Let ω be the angular velocity of the disc, and r its radius. Taking the disc in any position, draw, through the centre of rotation O, O H perpendicular to G G′, or parallel to the sides A B, A′ B′; and through the centre C of the disc draw T T′ parallel to G G′, or perpendicular to the above-mentioned sides. The points T and T′ will be the actual points of contact of the disc with the frame. If P is the point of intersection of the straight lines O H and T T′, it is plain that we shall obtain the law of the motion by expressing the distance T P as a function of the time t, reckoned, for example, from the instant when the point C was upon the straight line O H. But we then have C O P $= \omega t$; consequently

2370.

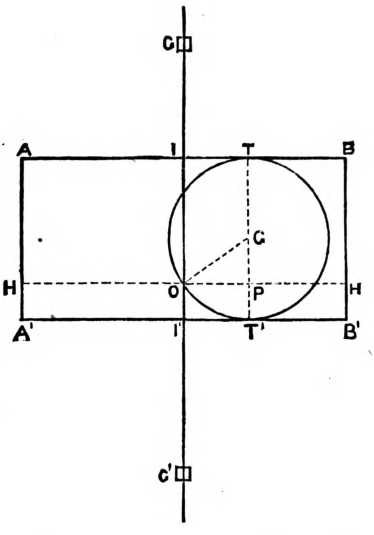

$$T P = T C + C P = r (1 + \sin. \omega t). \qquad [2]$$

Such is the law which it was required to obtain. It will be readily perceived that the distance T P varies between zero and $2r$. The advantage of this eccentric is, that the changes of velocity take place gently, and that the disc always acts normally to the sides of the frame or case. It would, however, give rise to a considerable amount of friction if the force to be transmitted were not small.

Eccentric Strap, Fig. 2369.—The revolution of the eccentric in its strap causes an amount of friction that must be considered; the resistance caused by this friction is, however, easily calculated. If T represent the tension or the pressure exerted by the eccentric rod, the friction of the strap against the circumference of the eccentric will be represented by fT, f denoting the coefficient of friction; ds being the element of the inner circumference of the strap, the elementary work of the force T will be $f T\, ds$, and the expression of its total work for one revolution of the eccentric will be $\int_0^{2\pi r} f T\, ds$, r denoting the inner radius of the strap. As the force T is not given analytically as a function of s, this definite integral must be calculated by Simpson's approximative formula, having determined an even number of values of T corresponding to values of s in arithmetical progression. For this purpose we may trace the eccentric and its rod in a certain number of positions, embracing altogether a whole revolution of the eccentric. For each of these positions we determine the force T, and, consequently, the friction fT; computing, at the same time, the arc s of the inner circumference of the strap included between the point of contact of the strap and of the eccentric for each of the positions considered, and the point of contact corresponding to the initial position. We may then trace two rectangular axes, representing as abscissæ the values of s, and as ordinates the corresponding values of fT. The area of the continuous curve drawn through the ends of these ordinates will express the force sought. If the values of s are not in arithmetical progression, having traced the curve as described above, we may divide the extreme abscissa—that is, $2\pi r$—into an even number, $2n$, of equal parts; raising ordinates through the points of division till they meet the curve, and measuring them on the plan, we obtain the ordinates which are to enter into Thomas Simpson's formula.

The first factor of this formula will be $\frac{2\pi r}{2n}$, a quantity proportional to r; it follows from this that the amount of work consumed by the friction of the strap increases with the inner radius of the strap. On account of the large amount of friction produced, this mode of transmitting motion is resorted to only when a small force is required, such, for instance, as that needed to work the slide-valve of steam-engines.

Parallel Motion.—The beam and counter-beam is an arrangement for ensuring the rectilineal motion of a rod. To the end of a beam O A, Fig. 2371, which turns about a horizontal axis in the point O, are jointed, on both sides, two equal rods having as their common projection on the figure the straight line A B. The ends of these rods corresponding to the point B, are jointed to two other equal rods projected in B C, turning about a horizontal axis in C, and forming what is called the *counter-beam*. In the middle M of the two former rods is fixed a horizontal axis, to which is jointed the end of the rod whose motion is to be in a straight line. To form an accurate idea of the motion which the axis M may assume, it will, evidently, be sufficient to consider the locus described by a determinate point M in a moving straight line A B, resting at its ends upon two circumferences, the centres of which are O and C, and the radii O A and C B. This locus is the Lemniscate. It has the form of the digit 8 much extended vertically, the multiple point of which

is situate upon the straight line joining the centres O and C. The tangent is, in this point, sensibly confounded with the curve throughout a long distance, a circumstance that enables us to consider, within certain limits, the point M as describing a straight line; we shall see later that the error in this way committed is practically quite inappreciable. The long-inflexion curve may be easily constructed by points; for, if we assume the beam to be in any position A O, the point B may be found by the intersection of two arcs of circles described from the points A and C as centres with radii equal respectively to the length of the connecting-rod, and to that of the counter-beam. Having found the position of the connecting-rod, we have only to mark on it the point M, whose distance from the point A is known. It is also easy to construct the tangent to the point M; for if we produce the radius C B till it meet the radius O A in I, the point I is the *instantaneous centre* of the motion of the connecting-rod (see M. Chasle's theorem of instantaneous motion); consequently, by joining M I, we get the normal in M to the curve described, and a perpendicular drawn through the point M gives the tangent. Many mathematicians have endeavoured to find the equation of the long-inflexion curve; M. de Prony, in an article inserted in the Annales des Mines in 1826, and M. Vincent, in an article contributed in 1837 to the Transactions of the Society de Lille, considered the question in an especial manner.

Belanger's method of calculating the co-ordinates from the point M for a given position of the beam, does not lead to some practical results. Thus let O X and O Y be two axes, one horizontal the other vertical, passing through the point O; let M D and O D be the co-ordinates y and x of the point M with respect to these axes, and let O A = R, C B = r, A B = l, A M = λ, A O X = α. Draw A H parallel to O X, A a and C P parallel to O Y. We have immediately

$$O\,a = R \cos.\ \alpha \text{ and } A\,a = R \sin.\ \alpha.$$

Hence we deduce the distances C H and A H, and consequently the hypothenuse A C of the rectangular triangle A H C, and the acute angle C A H. In the triangle A B C, therefore, we know the three sides, and the angle C A B may be found by the usual methods. The sum of the angles C A H and C A B is thus determined, it is the angle of A B with the axis O X. Representing this angle by β, we obtain, by the fundamental property of projections,

$$x = R \cos.\ \alpha + \lambda \cos.\ \beta, \text{ and } y = R \sin.\ \alpha - \lambda \sin.\ \beta.$$

This calculation is necessary to ascertain the deviation between the curve and the tangent to the multiple point, which a diagram even if constructed on a large scale could not make apparent. We thus see that, above the multiple point, the curve deviates to the right of the tangent at first and then approaches it, cutting it finally to form the upper loop. In the same way, below the multiple point, the curve deviates to the left of the tangent, then approaches it and crosses to the right to form the lower loop.

2371.

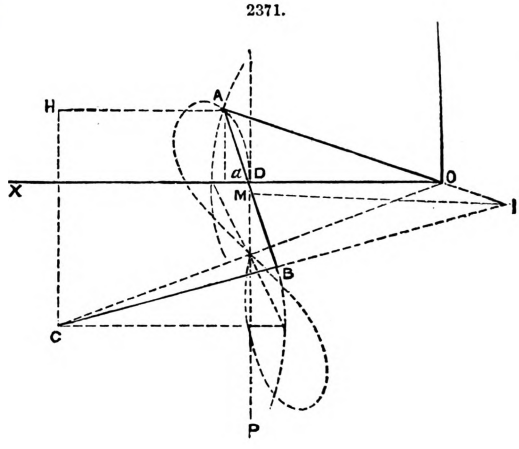

2372.

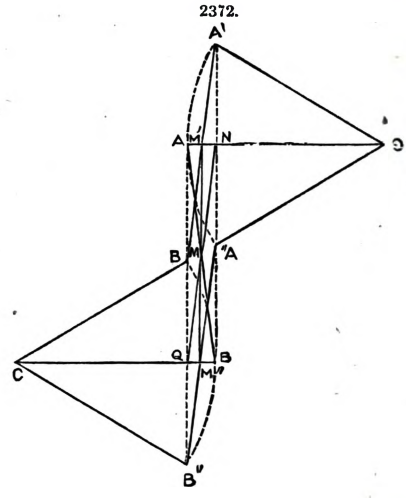

Usually the beam and the counter-beam are made equal, and they are arranged in the following manner, according to the rules laid down by Watt. Let O A, Fig. 2372, represent the horizontal position of the beam, and O A′, O A″ the extreme and symmetrical positions assumed by it in its alternating motion. The angle A O A′ is made equal to twice the angle, having as its tangents $\frac{1}{6}$; hence we conclude that the value of the sine of A O A′ is $\frac{12}{37}$, which determines the length O A of the beam when the length of the half-chord A′ N is known. It may be remarked in passing that the value of the angles A O A′ itself is 18° 55′ 28″. The counter-balance is so disposed that, in its horizontal position, its extremity B may be upon the chord A′ A″ produced, and as the excursions of the counter-beam are here equal to that of the beam, it follows that the point B is in its turn upon the chord produced B′ B″ which joins the extreme points of the arc described by the end of the counter-balance. The point M being in the middle of the connecting-rod, it follows that the point M, corresponding to the mean positions A′ B′ and A″ B″, are in the same straight line parallel to the chord A′ A″, dividing A N into two equal parts. A′ A″ and B′ B″ being equal and parallel, the figure A′ B′ B″ A is a parallelogram; the straight line M′ M″ joining the middles of the sides A′ B′ and A″ B″ is, therefore, parallel to A′ A″. Again, the figure A N B Q

is a rectangle; and M′ M″ is confounded with one of its middle lines, since it is at an equal distance from A′ B and A B″; therefore, the middle M of the diagonal A B is upon M M′. Finally the point M is also the middle of the diagonal N Q, which is one of the middle lines of the parallelogram A′ B′ B″ A″; therefore, the point M is the middle of M′ M″; and this straight line is equal to A′ A″ or to B′ B″. But M′ M″ is the stroke or travel of the rod to be guided; the chord A′ A″ should, therefore, be taken equal to this stroke. In this diagram the length A B of the connecting-rod has been taken arbitrarily; but Watt recommends the adoption of a length equal to the chord A′ A″, or at least to the $\frac{4}{7}$ of this chord.

The lemniscate, which in the present case takes more particularly the name of Watt's curve, passes, as we have seen, to the right of M M′, and returns in M′, passing thence to the left; but the calculation shows that the greatest deviation between the curve and M M′, which happens at about $\frac{3}{4}$ of this distance reckoning from M, does not reach 0·0003 of the radius O A; the same deviation occurs on the left of M″. This deviation, it will be perceived, is altogether imperceptible. M. Tchebycheff, in a learned communication to the Mémoires de l'Académie de Saint-Pétersbourg, has demonstrated that the proportions adopted by Watt are not those which correspond to the minimum of deviation; but they have been generally adopted on account of their simplicity. It has also been shown that the deviation may be diminished by making the chord A′ A″ greater than the stroke of the rod to be guided, because in that case the joint of the rod would not reach in its motion the positions corresponding to the maximum of deviation. But this would cause another objectionable feature, namely, a useless increase of the dimensions and weight of the beam.

Straight-Link Valve-Motion, Fig. 2373.—By this arrangement, invented by A. Allen, simultaneous movement is given to the eccentric rods and link and to the valve-rod, in opposite directions, by short levers placed on opposite sides of the reversing shaft, thereby obtaining a straight link. This valve-motion is easy of reversal, balance weights are dispensed with, and the sliding movement of the block is reduced. The only fixings required are the reversing-shaft brackets. Most accurate results as regards an equal distribution of the steam can be obtained by this motion; while from the simplicity of the motion and from the link being straight, in place of curved, repairs are more economically executed.

2373.

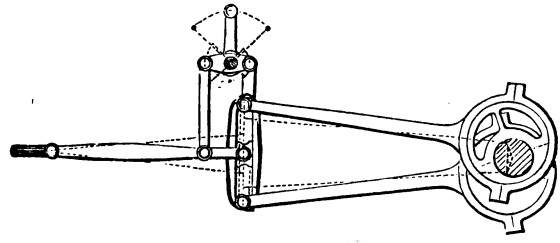

Pressure Steam-Gauge, Foster's Direct-acting.—With respect to accuracy, durability, mechanical arrangement, and efficiency, no spring steam-gauge that has fallen under our notice, and we have examined many, equals that of Foster, Figs. 2374 to 2376.

2374.

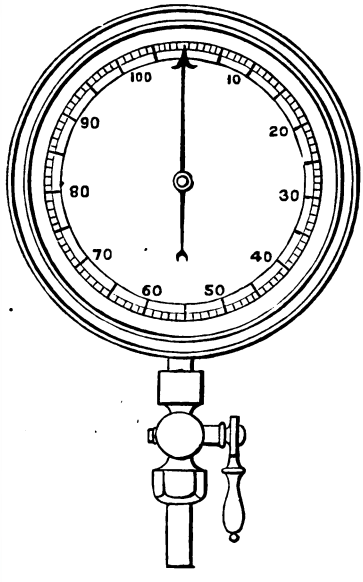

2375.

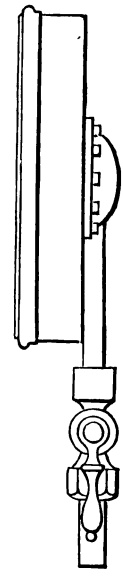

2376.

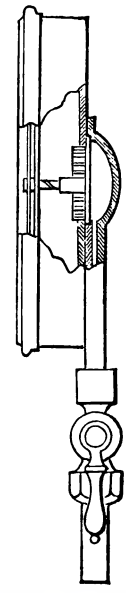

In Fig. 2376 the cover is removed to show the position of the spring, the spindle and its screw-shaped slot. The coiled flat spring of this gauge is shown in plan Fig. 2378, of which A, Fig. 2377, is a section. Figs. 2379, 2380, are of one of Foster's testing gauges, full size; this small gauge can be made to indicate up to 300 lbs. without increase of size. A plate of vulcanized rubber B, Fig. 2377, rests upon the spring. O, Fig. 2377, spindle with screw-shaped slot; one end of this spindle rests in a socket-piece fixed in the centre of the spring A; the other end has the

index hand P fixed to it. The means employed to communicate a rotary motion to the spindle is by a small pin fixed in the socket-piece at right angles, which obtrudes into the slot O, Fig. 2377. Now as the pressure on the plate of rubber deflects the spring, the pin slides up the slot and

2377.

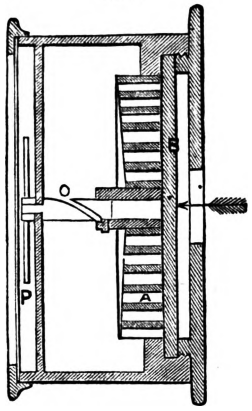

2378.

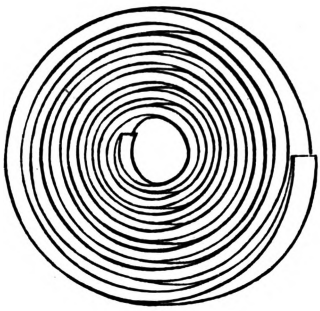

2379.

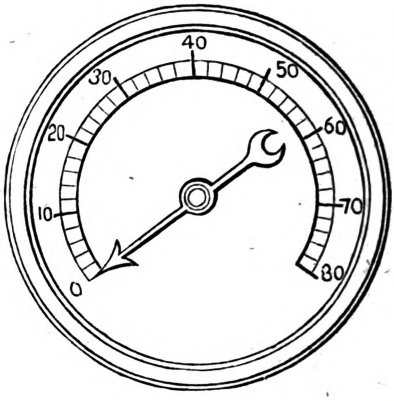

2380.

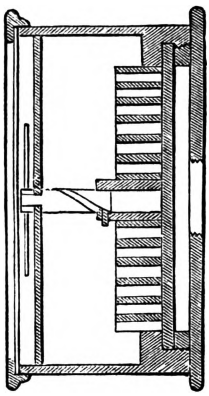

2381.

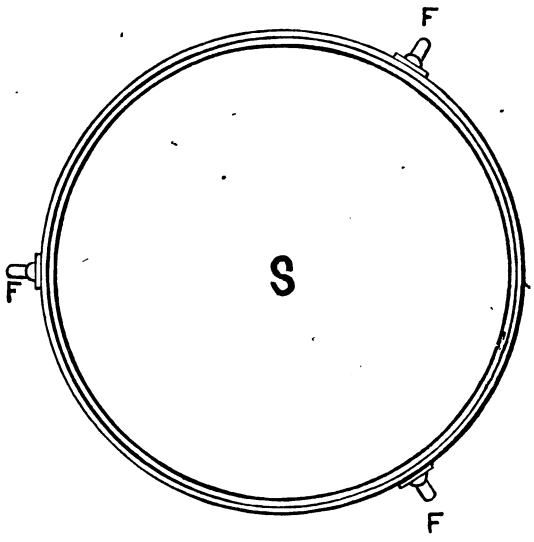

causes the spindle with the index to revolve; the reverse action taking place when the pressure is being removed. These gauges of Foster and Barnett are extremely simple in construction; there is nothing to get out of order, the spindle which carries the hand has only its own weight to support;—they are very sensitive, as the slightest pressure is immediately shown by the hand. Foster and Barnett carry out the same principle in weighing machines, which shows that the action of a spring so formed is uniform. One of those weighing machines is shown in Figs. 2381 to 2383. Fig. 2381 is a plan, Fig. 2383 a section. F, F, F, feet or supports. C P, Fig. 2382, the pointer. S the scale or disk of balance. The slot, of which we have before spoken, is well defined in Fig. 2383.

2382.

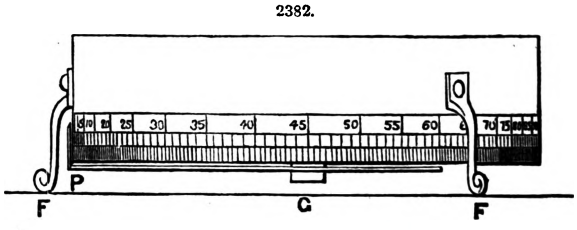

2383.

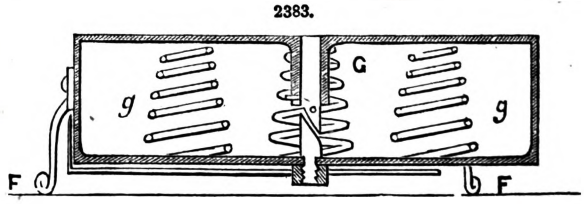

Lubrication of Steam.—It has been found advisable and generally necessary to grease the interior of the steam-cylinder; sometimes the slide-valve. If the steam is very wet, the attraction of the walls of the cylinder causes a certain quantity of water to be deposited on them, and the friction is not excessive enough to cause the engine to groan, hence engines are occasionally met with in which, because of the wetness of the steam used, there are no special means of lubricating

the internal rubbing parts of the steam-cylinder. But it has been found more economical to have the steam superheated or at least somewhat dry; it then appears more or less blue when let off into the open air. It is for such cases that special means of lubrication are necessary. The prevailing method is the *grease-cock* on the steam-cylinder, and sometimes a smaller cock on the slide-chest. The grease-cock is in the shape of a hollow ball with a cock above and another below. A cup of the same capacity as the ball surmounts the upper cock. The latter being closed, the cup is filled with grease, generally tallow, the lower cock shut and the upper opened, when the cup will empty its contents into the ball, and by then closing the upper and opening the lower cock the tallow is drawn into the cylinder. It is singular that such a rough contrivance is still extensively used, while shafting is generally lubricated by some sort of self-acting means, such as capillary attraction in a wick, or by the needle lubricator. No sensible person would say that he preferred to empty the contents of the oil-cup into the bearing at once, and yet engineers do a similar action when they use the old grease-cock on the cylinder.

Of late years the subject has been agitated considerably, and locomotives for instance are now seldom seen without some self-acting means for greasing the steam continuously before entering the slide-valves. Also among stationary and marine engines the principle is being successfully applied. By lubricating steam not only is the friction of piston, slide-valve, piston-rod, and slide-rod reduced to a minimum, which means a saving in fuel, but there is also great saving of tallow and oil. Among the best known and approved lubricators may be named those invented by Roscoe, Wilson, Ramsbottom, Clements, and Gamble. The last named, of which Fig. 2384 is a section, is perhaps the simplest and most practical of them all. Supposing it to be connected to some part of the steam-pipe close to the slide-chest; the steam, entering through the cocks A, passes through D into the lubricator, which is filled with tallow B, H, up to the level F, G, of the steam-pipe, and stands over the surface of the tallow at C. The steam condenses, and, water being heavier than tallow, falls to the bottom, thereby displacing a certain quantity of tallow which is thus forced over into the steam-pipe in a constant, slow, and dribbling stream. To meet the various requirements of the various engines and the various temperatures the lubricators are placed in, which of course produce quicker or slower condensation of the steam in the lubricator and consequent quicker or slower feed of tallow into the steam, there is a simple and ingenious contrivance. It will be observed that the steam-pipe at its termination in the centre of the lubricator has a small hole at the tallow level, for the entrance of the fresh steam into the lubricator and the egress of the greased steam. The steam-pipe has a siphon-pipe screwed into the bottom, reaching nearly down to the inside bottom of the lubricator. Into the inside top of the siphon-pipe is screwed the small regulating pipe, which has a small hole in its side, and has plenty of play round it where it passes through the steam-pipe. If this pipe is screwed down so as to have the hole in its side below the steam or tallow hole, then, owing to capillary attraction, the water will take the preference, and will continue to be siphoned out from the bottom as fast as it comes in and condenses, so that little or no lubrication takes place. On the other hand, if the regulating pipe is screwed up so that its hole comes somewhat over the tallow hole, then no water will be siphoned out from the bottom, and a very plentiful lubrication takes place. In any intermediate position, partly water and partly tallow will overflow into the steam-pipe; the proportions can be regulated to the greatest nicety. A strainer E is fixed over the filling hole, so as to clear the tallow if it should be dirty. See AIR-PUMP. BOILERS. BUFFER. ENGINES, *Varieties of*. FUEL. GEARING. INDICATOR. LINK-MOTION. LOCOMOTIVES. MARINE ENGINE. MECHANICAL MOVEMENTS. PARALLEL MOTIONS. PUMPS AND PUMPING ENGINES. SLIDE-VALVES. SPRINGS. STATIONARY ENGINES. STEAM AND STEAM-ENGINE.

2384.

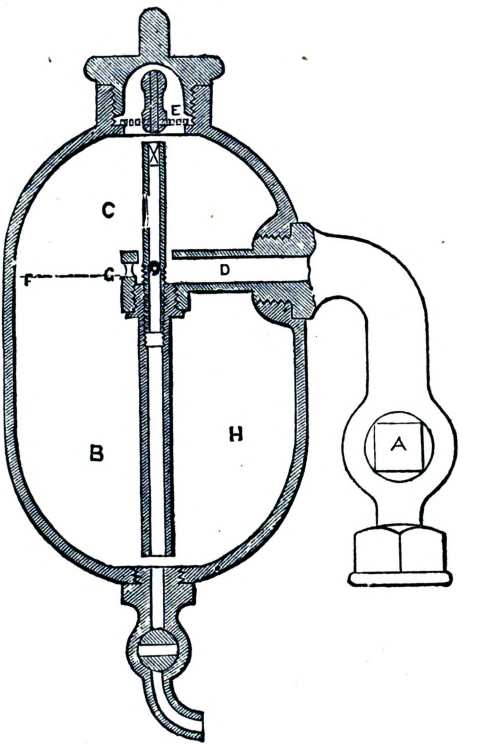

DEVIL. FR., *Loup; Machine à ouvrir;* GER., *Wollbrecher; Wolf;* ITAL., *Diavolo.*

Devil is a rude term applied to a machine containing a revolving cylinder armed with spikes or knives, for tearing, cutting, or opening raw materials, as cotton, wool, rags.

DIAL. FR., *Dyal;* GER., *Zifferblatt;* ITAL., *Orologio solare;* SPAN., *Reloj de sol.*

A *dial* is an instrument for showing the apparent time of day from the shadow of a style or gnomon on a graduated arc or surface. When the shadow is cast by the sun, it is also called a *sun-dial.*

The term *dial* is applied to the graduated face of a time-piece on which the time of day is shown by pointers. A miner's compass is also termed a *dial.* See COMPASSES, p. 1015.

DIES. FR., *Matrice;* GER., *Matrize;* ITAL., *Matrice;* SPAN., *Cuño, Matriz.*

See HAND-TOOLS, *Stocks and Dies.*

DIGESTER. Fr., *Marmite;* Ger., *Kalcinirtopf;* Ital., *Digestore;* Span., *Marmita.*

A digester is a strong closed vessel, in which bones or other substances may be subjected, usually in water or other liquid, to a temperature above that of boiling.

DISPLACEMENT. Fr., *Déplacement;* Ger., *Versetzung;* Ital., *Spostamento, Portata;* Span., *Líquido desalojado.*

Displacement.—Bodies, says J. Scott Russell, which are designed to float in water, must be so designed, that when they are put into the water sufficiently far to swim just so much out of the water as is intended, the part in the water shall be of the exact size necessary to displace the quantity of water intended, and that the body which floats shall be of the exact weight of the water it displaces.

Let us see what will happen if this be not accurately done. Suppose the bulk of the body has been made too small for the weight which it is intended to carry, the vessel will sink deeper into the water than had been intended; and by sinking so much it will displace the additional quantity of water necessary to make up the extra weight, and so, though it swims, it will swim too deep. More displacement must therefore be found to meet the deficient weight; the vessel, which was intended to swim light, will swim deep in the water, unless her weight be diminished by lightening until she return to her intended former depth. What is to be taken care of in the calculation, therefore, is, that at whatever depth it has been decided that the ship shall float in the water,—or, which is the same thing, at whatever height the upper part is to float above the water,—in that position the bulk of the part in the water, and the weight of the whole ship and its contents, must be so designed as to be exactly equal to the bulk of the water to be displaced by the ship, and the weight of the water to be so displaced.

In a ship it is necessary to do more, however, than calculate one displacement. There are two critically important displacements to be calculated for every vessel—displacement when she is lying in the water ready to take in her cargo, or in the lightest state in which she will ever swim, that is, with a clean-swept hold; this is technically called light-displacement. The other is load-displacement, which is calculated for the heaviest cargo she will ever carry, and the deepest draught of water to which she will ever sink under load. These are the two critical draughts of water, or depths of the ship in water.

To calculate these, the constructor must first ascertain the exact weight of the hull of the ship. He must include in the weight of the hull all the essential parts attached to, and connected with, that hull. He must add to that the full equipment necessary to fit her for sea-going use; but he must not include those stores—water, provisions, coals, and so on—which are to be consumed in actual service. This weight of hull and equipment for service constitute the data on which to construct the light-displacement of the ship.

The load-displacement is next to be calculated. The data for this consist, firstly, of the light-displacement, and secondly, in addition to this, of all the stores, provisions, water, coals, and consumable commodities to be used on the particular voyage intended, together with the cargo or freight of every kind which has to come on board.

To the light-displacement corresponds what is called the light-draught of the ship, and to the load-displacement the load-draught. There is also the light-trim of the ship, and the load-trim of the ship. In some foreign tongues draught is called *deep-going* of the ship, and this phrase gives the exact meaning of draught. Trim means difference of draught, or rather the difference between the depth of the after part of the ship under water and that of the fore part.

It is usual to give a ship such trim that the draught of water abaft is somewhat deeper than the draught forward. In this case she is said to be trimmed by the stern. If it were the contrary, she would be said to be trimmed by the head. This is what is meant when it is said that a ship is trimmed 2 ft. by the stern, or 2 ft. by the head, this difference of 2 ft. either way being technically called the trim. When a vessel is trimmed neither by the head nor by the stern, but draws the same water forward and aft, she is technically said to be on even keel. It is usual to take a middle draught, half-way between the fore and after draughts, and to call that the mean draught of the ship; so that a ship which is trimmed to 21 ft. at the stern and 19 ft. at the bow, is said to have a mean draught of 20 ft. In this case it is common also to call this the draught of water of the ship, and to call the greatest draught of water, whether at the stern or bow, the extreme draught. In calculations of displacement we generally use the mean draught.

The elements to be considered in calculating displacement are as follow;—

1. Dead-weight when light.
2. Dead-weight when laden.
3. Light-draught of water.
4. Light-trim.
5. Load-draught of water.
6. Load-trim.

These elements settled, we can now calculate exactly the displacement of a ship of any given form, of which we may possess a design—firstly, for her light-draught of water; secondly, for her load-draught.

First, for her light-draught, we mark off on the drawing of the ship the exact part of the body of the vessel which will be under water when she floats light. We call this the immersed body of the vessel (light). We then measure exactly, and calculate geometrically, the bulk of this immersed body. This bulk will be expressed in so many cubic feet—say 18,000. We next take the weight given for the ship and her equipments when light—say 500 tons.

Now we know that a ship will float at a given draught of water when the quantity of water she displaces is of exactly the same weight as herself. In this case her weight is given as 500 tons. The question, therefore, is, Whether the volume of water, namely, 18,000 ft.—which is the bulk of the immersed body, and which is, therefore, the quantity of water displaced—will weigh more or less than 500 tons?

Now it will be found that the bulk of 500 tons of water is just 18,000 cub. ft., and the displace-

ment of the ship, as measured, is also 18,000 cub. ft.; this, therefore, is the true light-displacement.

Secondly, for her load-draught, we mark off on the drawing of the ship the exact part of the body of the vessel that will be under water when she is deep laden. We then measure exactly, and calculate geometrically, the bulk of that part of the vessel which was formerly out of the water, but which has now been sunk under it by the lading. This bulk is, we will say, 36,000 cub. ft. Thirty-six thousand cub. ft. of water weigh 1000 tons; therefore 1000 tons is the dead-weight of cargo which the vessel will carry on the given load water-line.

But the total load-displacement of the ship consists, first, of the light-displacement of 18,000 cub. ft.; second, of the lading-displacement of 36,000 cub. ft. more; so that the total displacement of the ship, when laden, is the sum of the two, or 54,000 cub. ft. The immersed body of the ship at the load-draught has therefore a total displacement of 54,000 cub. ft.; and the ship, with her cargo, floats a total weight of 1500 tons.

It is thus that the simple law of Archimedes reduces the question of calculating the weight a ship will carry at a given draught of water, to a mere question of measurement of the bulk of that part of the ship which will then be under the water, and which we have called the immersed body. For every cubic foot of that immersion we allow the weight of that cubic foot of water, and thence obtain the number of tons weight the water will support. This is said to represent the floating power of the ship; it really represents the buoyant power of the water acting on the outside of the ship. The ship itself has no power to carry anything or to float; all it does is to exclude the water and enclose the cargo. The ship is merely passive—the water carries both the ship and her cargo. Buoyancy is, therefore, the power of the water to carry a given ship. It is proportioned exactly to the bulk of the body of the ship under water, and its force is measured by the weight of the water displaced, and which we have called the *ship's displacement*.

There is an important conclusion to be drawn from this law, and it is, that the floating power of a ship has nothing to do with the shape of the ship, but is entirely due to its size or bulk. Practical ship-builders, ignorant of the laws of naval architecture, have imagined that they could confer surprising powers of flotation, and ability to carry heavy weights, merely by giving proper shapes, imagined by themselves, to the immersed bodies of their ships. Some of them, of considerable eminence, have been known to pass a long period of their lives under this delusion, and a very distinguished one even wrote a treatise on the subject; but the delusion passed away, and the authority of Archimedes was re-established. The fact, however, of the existence and practical application of the opposite opinion tends to show that the principle of flotation is by no means self-evident, and the discovery of Archimedes had great merit. Its practical value to us is its admirable simplicity, its unquestionable authority, and its absolute exactness. To understand its nature is, however, less easy than to appreciate its value; and it will take a great deal of thought to understand thoroughly, why no possible invention of shape can give to a ship the power of greater or less buoyancy, than is measured by the exact weight of water which forms its displacement.

STANDARDS OF DISPLACEMENT.

Weights.	Bulks.	Sizes.
*1 ton	*36 cubic feet fresh water	2 × 3 × 6 feet
†1 „	†35 „ sea water	2 × 2·5 × 7 „
*62·5 pounds	*1 „ fresh water	1 × 1 × 1 „
†64 „	*1 „ sea water	1 × 1 × 1 „
10 „	1 gallon fresh water ‡	6 × 6 × 7·69 inches
1 „	27·648 cub. in. ‡ „	3 × 1 × 9·216 „
1 ounce	1·728 „ „	1 × 1 × 1·728 „
0·58 „	1 „ „	1 × 1 × 1 „
2 tons	72 cubic feet	6 × 6 × 2 feet
3 „	108 „	6 × 6 × 3 „
4 „	144 „	6 × 6 × 4 „
5 „	180 „	6 × 6 × 5 „
6 „	216 „	6 × 6 × 6 „
10 „	360 „	6 × 6 × 10 „
100 „	3,600 „	6 × 12 × 50 „
200 „	7,200 „	6 × 12 × 100 „
300 „	10,800 „	6 × 12 × 150 „
400 „	14,400 „	6 × 12 × 200 „
1,000 „	36,000 „	12 × 24 × 125 „
10,000 „	360,000 „	24 × 50 × 300 „
20,000 „	720,000 „	24 × 75 × 400 „
30,000 „	1,080,000 „	24 × 75 × 600 „

* 62·5 pounds $= \frac{1}{35{\cdot}84}$ tons $= \frac{1}{36}$ tons nearly, and 1 ton = 35·84 ft. distilled water.

† 64 pounds $= \frac{1}{35}$ tons exactly, and 1 ton = 36 ft. salt water.

‡ The imperial gallon is defined by the Act of 5 Geo. IV., c. 74, as containing 10 pounds of distilled water, at a temperature of 62°·5 Fahr., and also as measuring 277·274 cub. in. If we take ordinary fresh water at a lower temperature (40° Fahr.) as our standard, a cubic foot of fresh water will weigh *exactly* 1000 ounces, or 62·5 pounds. All the figures given above are correct within a very small fraction. 36 cub. ft. of fresh water and 35 cub. ft. of salt water are the practical numbers usually taken to measure 1 ton of displacement.

Simple form of Vessel, as an Experimental Shape, is a Box.—To understand the functions of the shoulder of a ship, and those of the bottom, and the tendency of both to effect the stability of the ship, it will not be necessary to consider any but the simplest form which can float. Let us take for that purpose a square box of large size, say 36 ft. wide, 27 ft. high, and of indefinite length, and let us sink it by a weight to 18 ft. deep in the water. Each foot long of a box having this breadth and height will carry a ton weight, for every foot of its depth in fresh water. Being 36 ft. wide, a foot in depth displaces 36 ft. of water, the weight of which is 1 ton; therefore, 18 ft. deep will weigh 18 tons: and suppose the box itself to weigh 6 tons to a foot forward, the vessel would carry besides itself a weight of 12 tons. Let us draw in the figure such a box, and across it the line of the surface of the water, which we shall call always the water-line. Let the weight on the box be also a box, filled with heavy lead or iron, represented in Fig. 2385 as placed on the top of it.

This box truly represents a ship, the weight truly representing a heavy deck-load, proposed to be carried by the ship. It may represent the weight of an armament of artillery, or the weight of an iron-coated battery, or any other top-load

2385.

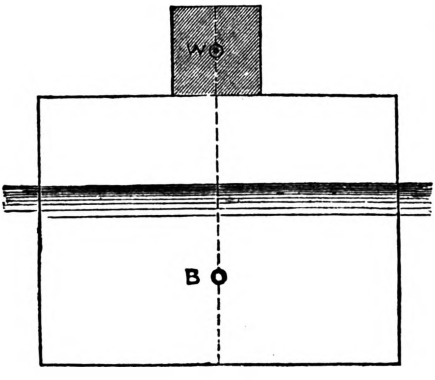

2386.

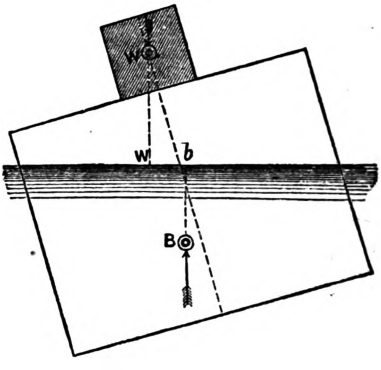

2387.

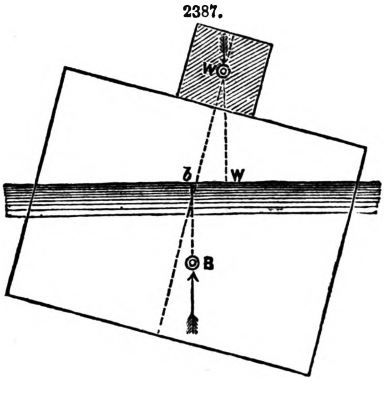

2388.

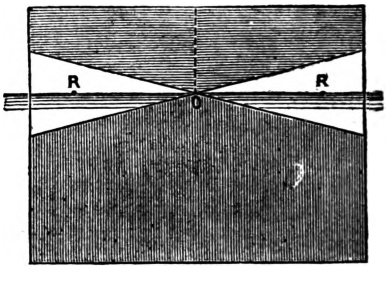

The question is, the ability or inability of that ship to carry that weight at that height out of the water. For this purpose we must conceive it to lean over on either side, and then examine whether it tends to return to the upright position and stand up, or to overset and let the weight into the sea. Let us, therefore, draw the ship in these two positions, Figs. 2386 to 2388. When we have done this we shall see that there is a part of a ship which is never out of the water, but keeps always under the water-line. Let us shade this part differently from the other. It is called the under-water body of the ship, and it is also called the upsetting part of the ship. This under-water body is bounded by, first of all, the bottom of the ship; secondly, by the bilges, or corners of the bottom; and thirdly, by a water-line of the ship in each of its two opposite positions. It is, therefore, pointed at the top, where it forms an equal-sided triangle, the apex of which is in the water-line. Two flat surfaces, therefore, form the top of this under-water body, and the rest of it form the bilges and bottom, or under-water skin of the ship. It is this shaded part whose action is to upset the ship.

Let us now examine the nature of the upsetting force produced by the under-water body, Figs. 2389, 2390. For this purpose, I observe that it is a symmetrical body, the right and left sides being of the same size, of the same shape, and in the original upright position of the body exactly balancing each other on both sides.

We may, therefore, take its whole effect as concentrated in a point in its middle line. This point we shall call B, or centre of effort of the under-water body.

The buoyancy or upward pressure of this under-water body will take place directly upwards in the line B *b*, and it will be noticed that it is quite on one side of the centre of the vessel. It is next to be noticed, in Figs. 2386, 2387, that the centre of the weight W is on the opposite side of the upright line. When the ship careens over to the right, the weight also inclines to the right,

and downwards; when the ship careens over to the left, the weight also inclines to the left, and downwards.

We have marked the direction of its effect by the line downwards from W.

2389.

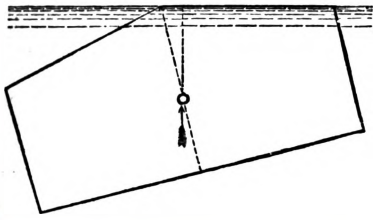

2390.

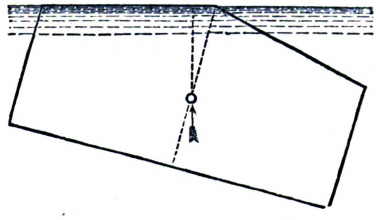

It will now be observed that when the ship is lowered on the right side, the effect of the weight from above is to press it downwards on that side. Unluckily, at the same moment the effect of the under-water body is equally bad, raising the opposite side out of the water. The ship is beset by two opposite forces, which, nevertheless, conspire in their bad effect: one sinks the right in the water, while the other lifts the left out of the water, so that with opposite means both overset the ship.

Stability.—The substance and sum of what we know of the nature of stability is this;—the shoulders alone give to the ship righting or uprighting power. No other part of the ship can be so formed as to increase the righting power given by the shoulders. The righting power given by the shoulders is equally effective in squaring the ship to the water, whether it be still water or wave water.

The bottom of the ship, or the under-water body, can in no way help the ship to keep upright; there is no kind of bottom on which the ship can be said to rest in the water; the most that any underbody can do, either by shape or size, is to take less away from the stability given to the ship by the shoulders, than some other shape or size of underbody takes away. Size of bottom, therefore, or quantity of under-water body, lessens the stability of a ship; and has to be counteracted by the power of the shoulders. In short, bottom upsets the ship; so much so, indeed, that if it be large and powerful, it may take more than the whole power of the shoulders to keep it down, and prevent the ship from capsizing. A large underbody, therefore, weakens the effect of the shoulder, by the whole of its upsetting power.

It is only, therefore, the surplus power of the shoulder remaining over and beyond what is employed to keep down the underbody, which we are able to make use of in carrying press of sail, or in supporting top-weight out of the water. If there be any such surplus, it is our business to find out how much that is; if it be enough to carry press of sail, and enough also to carry top-weight, then the ship may be able to do without ballast.

Ballast, in the general sense of the word, signifies weights carried under the water, as distinguished from weights carried above the water, or top-weight. There are two ways of ballasting a ship; one is, by real lading, or stowing heavy weights under the water; the other is by putting weights, which are not parts of the lading, nor essential parts of the ship, low down in the water, for the mere purpose of helping the shoulders to carry top-weight. Weight placed under the water, in either way, may be said to have the following effects;—First, by being under the water as far as the top-weights are above it, it neutralizes the bad effects of these top-weights, and balances them. In this way under-water weight helps the shoulders to carry top-weight.

There is another way of looking at the effect of under-water weight in giving stability; it aids the shoulders in keeping down the underbody. In this way, as well as in counterbalancing top-weight, under-water weight helps the shoulders.

Thus it is that there come to be three agents in stability; two arising from shape alone, and one from disposition of weights. The shape and size of shoulder give stability of form. The shape and size of underbody give instability of form. What of the power of the shoulder remains beyond counteracting this underbody is the true surplus stability, or measure of righting power, for that form. This surplus is all that can be used for navigating a ship and carrying her top-weights. If more stability be wanted, it can be obtained by weight alone. All the weights of a ship, which have their common centre of gravity in the middle of the ship, just between the two shoulders, neither help the stability nor hinder it. Only weight placed below the middle of the shoulders gives help, and increases stability; and if the centre of all the weights of ship, cargo, and ballast, taken together, fall above the water-line, the surplus power of the shoulders may enable her to carry sail. If not, there is no resource left but to lower the weights in her, or place ballast in her bottom; in other words, to supply the defect of stability of form by adding stability of weight.

As, therefore, stability of form is that power which the naval architect alone can confer on his ship; while stability of weight may afterwards be regulated by those who lade, and control, and navigate the vessel; the form and action of the shoulders are the province in which the skill, contrivance, and forethought of the designer can be most powerfully and usefully employed. We shall, therefore, proceed to a general examination of the powers and properties of shoulders. We may take shoulders as meaning those portions of a ship which, in heeling contrary ways, rise out of, and sink into, the water; or the parts of the ship between wind and water; what is below the shoulders being bottom, or under-water body; the remainder, above the water, being called top-sides.

Power of Shoulders to carry Shifting Weight.—The power of the shoulders of a ship is shown when heavy weights, which tend to overturn the ship, are sustained above the level of the water;

also, when they enable a ship to support heavy weights shifted out of the centre towards either side; also when they enable the ship to stand up under press of sail. This being the nature of the work the shoulders have to perform, in order to prevent the oversetting of the ship, the manner in which they accomplish the work is as follows;—One shoulder sinks deeper into the water, the other rises out. The effect is, that the shoulder in the water is increased in power by the quantity which falls into the water; and the other is diminished in power. Thus, the burden which one shoulder can carry becomes greater than the other; and the question arises, whether it thus becomes great enough to bear the additional force thrown on that side of the ship, or whether the force is too great and overturns it.

The question, how much the power of a shoulder is increased by its depression under water, depends on its size and shape, and on the place of its action. If the two shoulders are equal, and equally immersed and vertical at the sides, then the whole weight carried by both shoulders may be shifted to one side of the ship, to the extent of nearly $\frac{1}{3}$ of the breadth of shoulder, without overturning.

This may be well understood by studying the engravings which illustrate stability. Figs. 2391 to 2396 show a pair of shoulders carrying weight out of water. First, the whole is shown supported

2391.

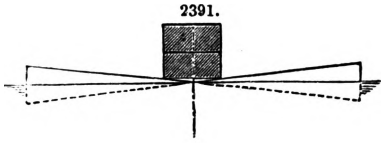

2392.

2393.

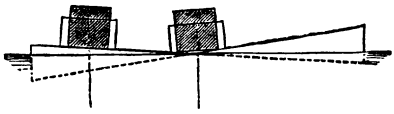

2394.

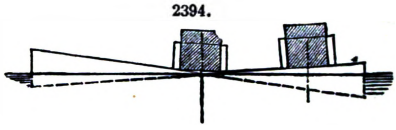

2395.

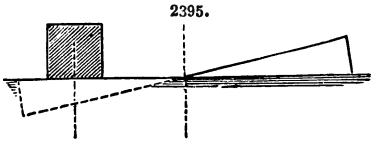

2396.

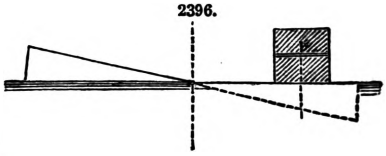

in the middle by the joint power of both shoulders; next, each shoulder is shown carrying its own weight $\frac{1}{3}$ from the outside, and supporting each its own half without help of the other; next, one shoulder carries all its own load and also half of the other's; finally, the whole weight is carried on a single shoulder, the other being entirely relieved.

Figs. 2397, 2398, show exactly how these forces of the shoulders act. The centre O is the turning-point of a lever; the points R and R are the centres of displacement of each shoulder.

2397.

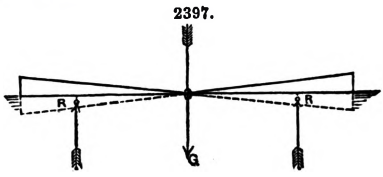

2398.

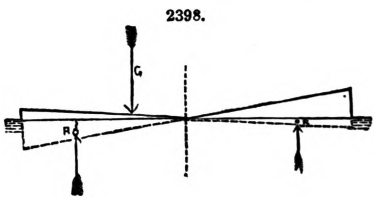

When they are equally in the water, their joint effect is on the middle; when unequal, their resultant effect moves over to the side of the more immersed shoulder.

Figs. 2399 to 2411 show the effects produced by the different immersions of one shoulder to equally increasing depths. With every increase of depth the centre of joint support shifts towards

2399.

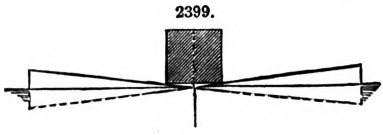

2401.

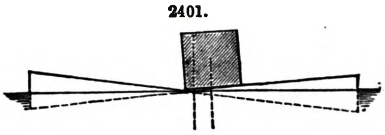

2400.

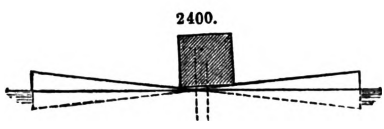

2402.

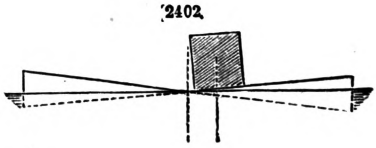

2403.

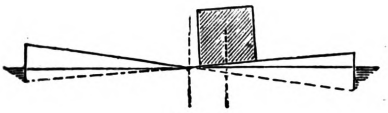

2404.

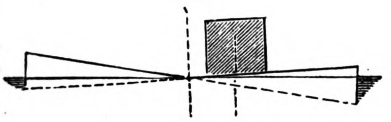

2405.

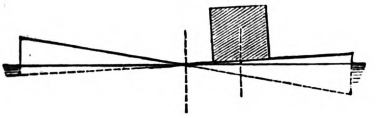

2406.

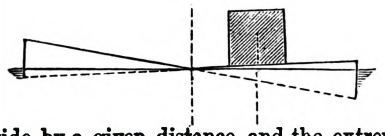

2407.

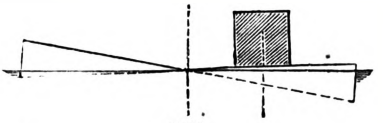

2408.

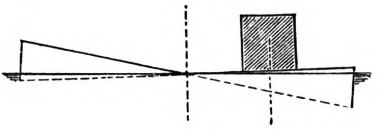

2409.

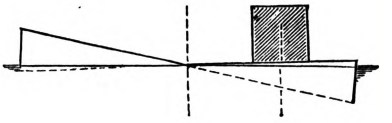

2410.

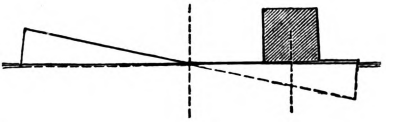

2411.

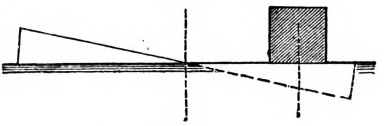

one side by a given distance, and the extreme shift is measured by the total immersion of one shoulder and total emergence of the other. With each immersion the total weight carried is shown on these figures at the point at which it is exactly balanced by the supporting forces.

Fig. 2412 shows the manner in which the centre of power of the pair of shoulders shifts with the different immersions of shoulder; each successive centre of effect being marked 1, 2, 3, 4, 5, 6, and so on, for the corresponding successive depths of shoulder.

2412.

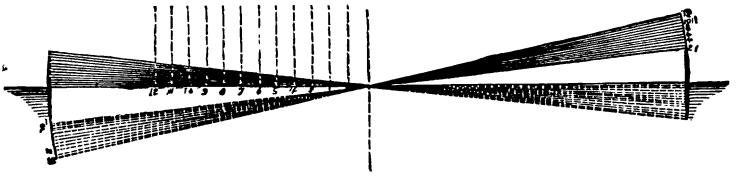

In the cases already examined, the depths of the shoulders are limited by angles of heel of 7° and 14° angle of shoulder. This is the standard angle for war vessels; but for merchant ships we use a heel of 14° 2′, or 28° 4′ for the angle of shoulder. This angle of shoulder is shown in Figs. 2413 to 2416, and the manner in which the centre of action of the pair of shoulders shifts

2413.

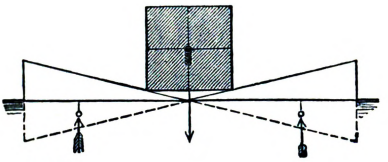

2414.

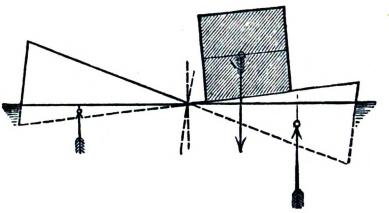

2415.

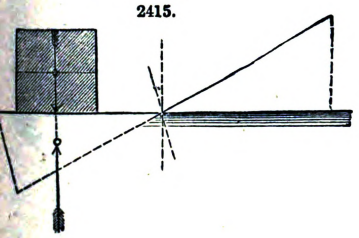

2416.

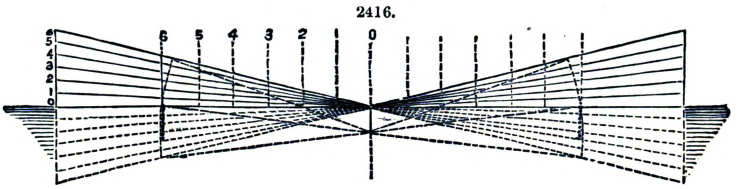

over to the sinking side is shown also. In Fig. 2416 the point under the centre of the shoulder is the centre of an arc, in which all the effective leverages of each shoulder lie.

In Fig. 2417 the depth of shoulder is taken as extreme. The centres of action are shown in each shoulder, and the joint centres of the pair are also shown. It is worthy of notice, that while the sinking of one shoulder and rising of the other take place to uniform successive depths, the centre of joint effect shifts over also by nearly equal steps to the sinking side. Depth of shoulder, therefore, makes no material change in the law of shift of the centre of action of these shoulders. Each half-inch of dip of shoulder enables them to carry a corresponding shift of nearly one foot of weight.

On the Relations between the Shifting Power of Shoulder and the Shifting Place of fixed Top-Weight. — Hitherto we have shifted the weights across the shoulders, so as to place them directly over the points of joint action of the

2417.

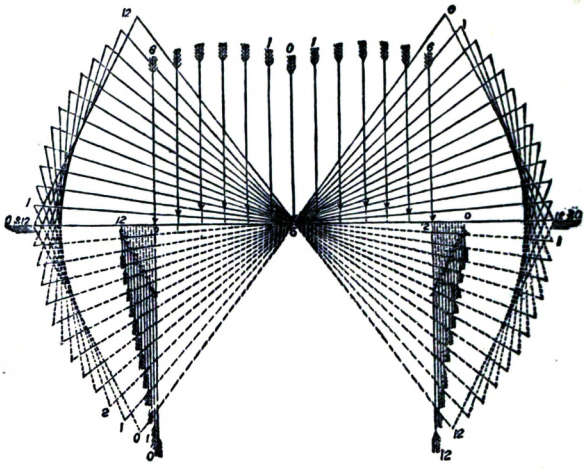

2418.

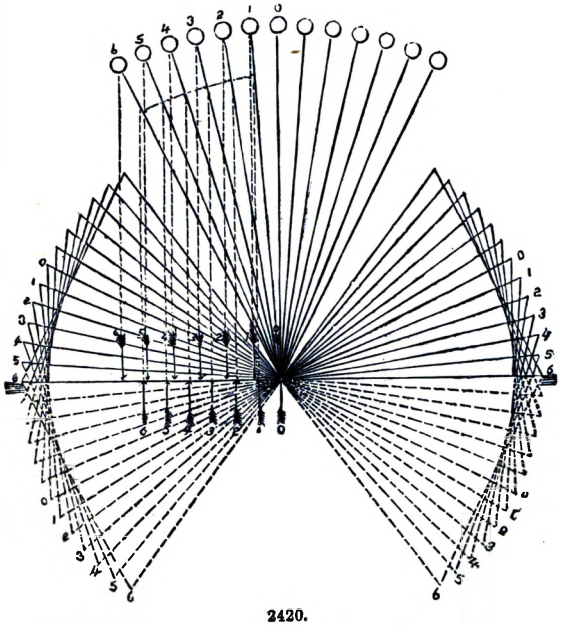

2419.

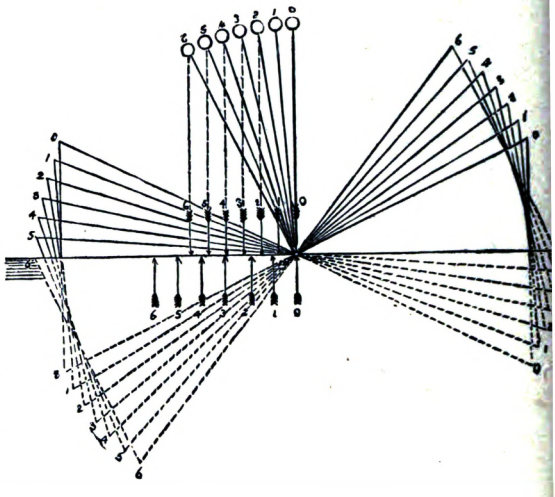

2420.

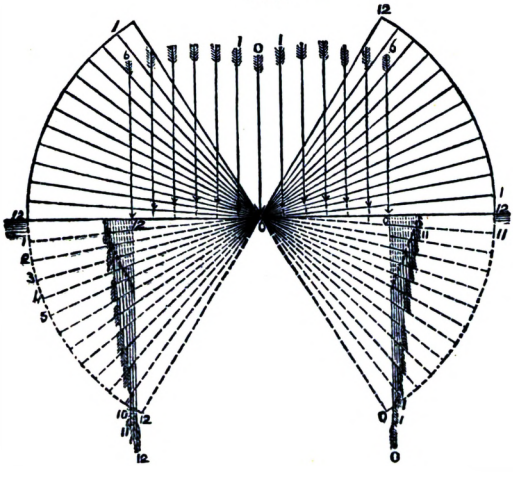

2421.

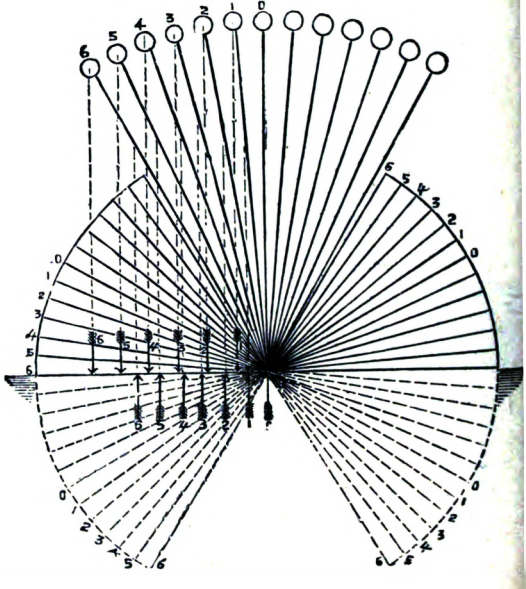

shoulders; and thus we have made an arrangement by which the weight and the shifting support exactly meet. But, in fact, the top-weight of a heeling ship follows a law of shift of its own, which is quite independent of the shift of shoulder. For each inch of heel of shoulder the fixed top-weight will incline over to the sinking side through the arc of a circle, and describe a given number of degrees; and it depends entirely on the height of the weight above the water what length the arc shall be, through which the weight will be shifted with that inclination. When the height is great, the arc large, the top-weight may travel faster than the point of support shifts, and upset; or it may travel slower, and stand. It depends entirely on whether the weight travels slower or quicker than the point of support shifts, whether the ship is stable or unstable.

Figs. 2418, 2419, show these two cases. In the former the weight is high, and travels faster to the sinking side than the centre of support at the shoulders, and so would upset. In the latter, the centre of effort of the shoulders travels the faster, and gets always beyond the line of weight, so as to right the ship. It is also noticeable that, by lowering the weight in Fig. 2418 to a height shown by a dotted line, the shift of the weight might be diminished so as to become, at a certain point, exactly equal to the shift of centre of action of shoulder; and then the body would rest inclined exactly in that position. This dotted line, therefore, indicates the limit between stability and instability. It may be called the line of balanced stability.

Round Shoulders.—We have hitherto taken the shoulders, when upright, as having straight vertical sides, which is the common case of straight-sided ships. Fig. 2420 is the circular shoulder, and shows a similar equable shift of the centre of joint action of the shoulders with the heel of the ship. Fig. 2421 shows that the fixed top-weight shifts by a law which is not uniform. The shift of the centre of effort is uniform, and that of the weight is decreasing. The top-weight shifts faster than the centre of support. A dotted line shows where the top-weight should be placed, exactly to balance the support due to the position. The power of shoulder to carry weight depends, therefore, on this simple question, Whether the centre of joint effort shifts farther and faster than the centre of the top-weight travels in the same direction? and every case that can arise may be solved by the construction of a diagram similar to the figures we have engraved; or by a calculation founded on the same method.

Inclined Shoulders show a very different law of stability from either straight or round shoulders. If we divide a pair of inclined shoulders by radial lines, cutting off equal parts of the inclined line above, we shall find that these lines cut the under-water part of the shoulders into unequal triangles. The out-of-water part of the shoulder being large, the under-water part is small.

This variable power of shoulder to carry weight with variable inclination, unfits it for the purpose of carrying a fixed heavy load with fixed stability. The diagrams show—1st, the constant weight carried by the equal shoulders as they incline; 2nd, the power given by the excess of shoulder on one side to carry increased weight; 3rd, the place where such increase of weight would be supported. The lengths of the arrows measure the forces they represent. See Figs. 2422 to 2427.

2422.

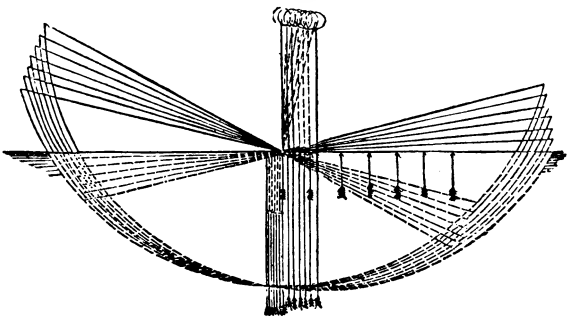

2423.

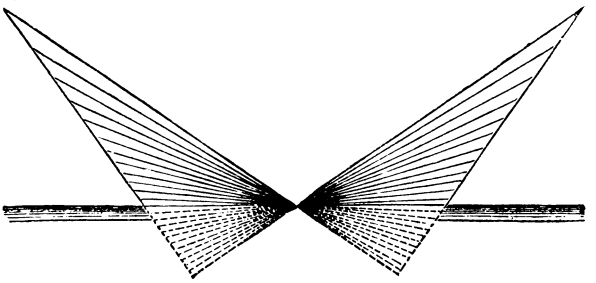

2424.

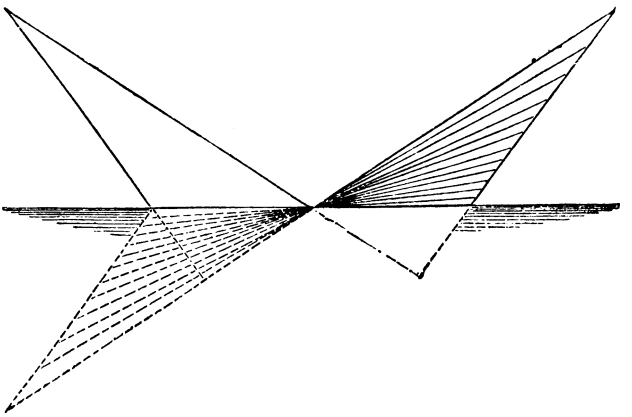

2425.

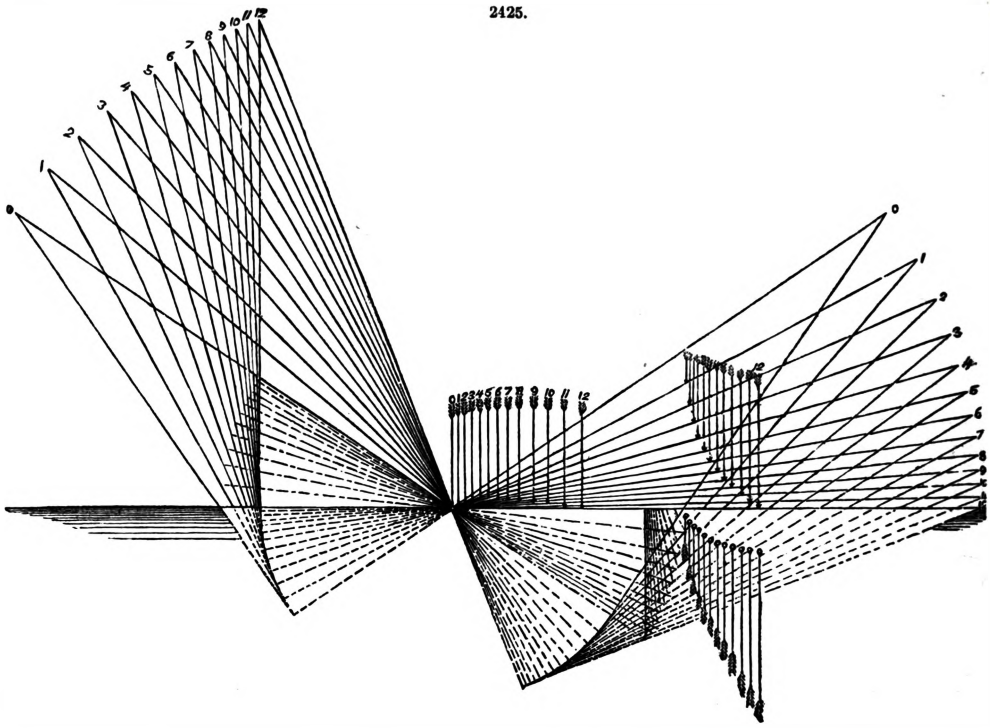

2426.

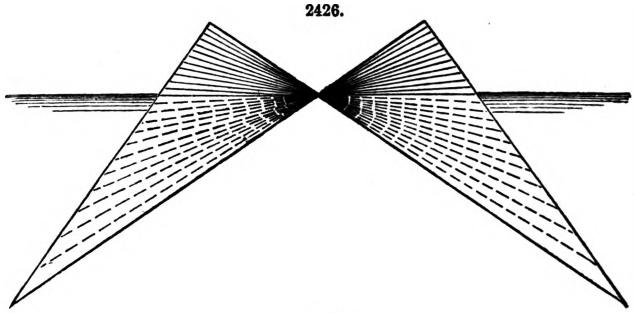

2427.

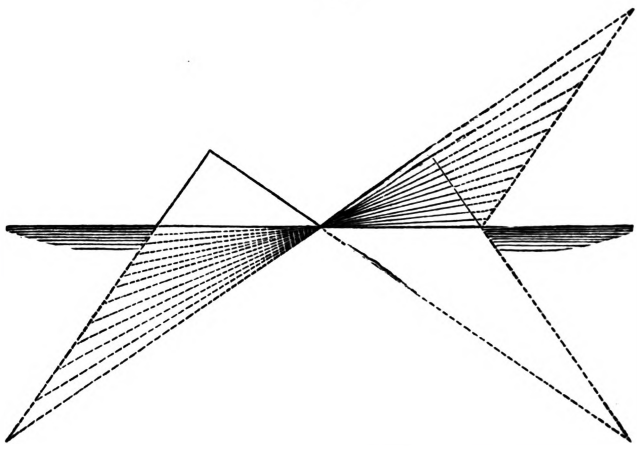

DISTANCES. Fr., *Distance*; Ger., *Entfermung*; Ital., *Distanze*.

Distances and heights determined without moving from a given point or station to any other point or station.

Eckhold's Geodesical Omnimeter, Fig. 2428.—This important mathematical instrument effects several geodesical operations; namely, the measuring of distances, whether inclined or horizontal; the determination of altitudes; and the measuring of angles, horizontally or vertically. In fact, this one instrument does the work more expeditiously than, and supersedes the use of, the chain, level, and theodolite.

Distances and altitudes may be obtained without changing the position of the instrument at one and the same time, by one single and unique operation; and that, too, with greater exactness and facility than by any other means which has hitherto been employed.

Distances of	100 ft.	are determined exact to	0·001	of a ft.
„	1000 ft.	„ „	0·05	„
„	1000 yds.	„ „	1 ft.	
Heights at a distance of	300 ft.	„ „	0·0005	of a ft.
„ „	1000 ft.	„ „	0·002	„

The instrument is formed by combining a powerful microscope $a\,b$, Fig. 2428, with a telescope $c\,d$, and a micrometer $e\,f$, which gives measures on a horizontal scale, divided in half millimètres, placed at A B, as fine as 0·0000002 of a mètre, or 0·0002 of a millimètre. The microscope $a\,b$ is perpendicular to the telescope $c\,d$, and both move on the same axis O. The perpendicular distance from the centre of the axis O to the scale A B can be found to any required degree of accuracy; it is a constant quantity in each instrument. The bases and the perpendicular of any number of triangles may be taken by the use of the microscope, micrometer, and scale A B, with accuracy, which triangles will be similar to corresponding ones taken by the telescope. The most important triangle given by the telescope is that formed by supposing two lines to pass through the telescope, one to the head and the other to the foot of a staff of known length, held perpendicularly at a point, the distance of which is required, or held perpendicularly in the direction of a required height. The similarity of the triangles here referred to may be established by plane geometry as follows;—

2428.

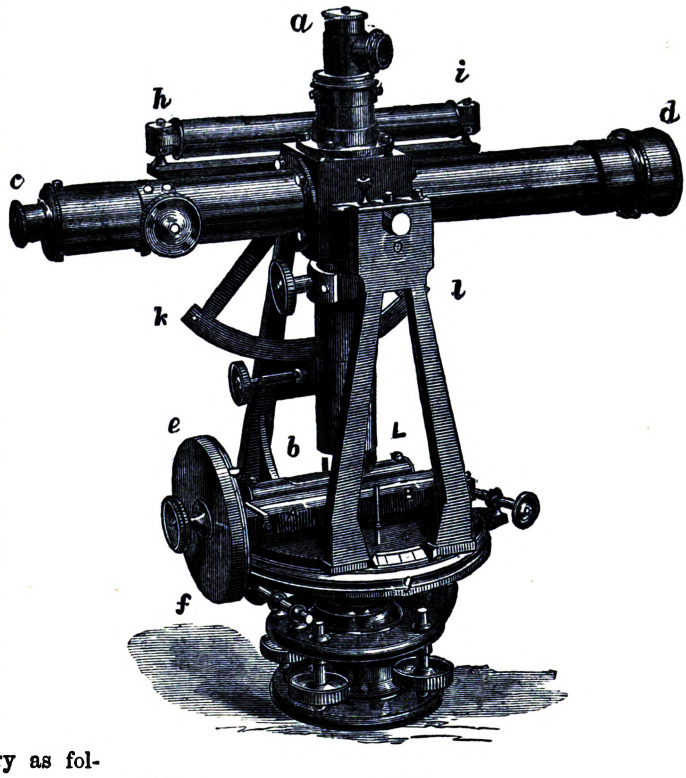

In Fig. 2429, if O D be perpendicular to O H, m O to O A, m' O to O B, and A B perpendicular to $m\,m'$; then the triangles $m\,m'$ O and A O B, m D O and A O H, m' D O and B H O are respectively similar. For the angles m' O H + H O B = m' O H + D O m' = a right angle; therefore, the angle H O B = D O m', and the triangles m' D O and B H O are similar, because the angles O D m' and O H B are right angles. In the same manner it may be shown that the right-angled triangles m D O and A H O are similar; and consequently the triangles $m\,m'$ O and A O B are similar.

2429.

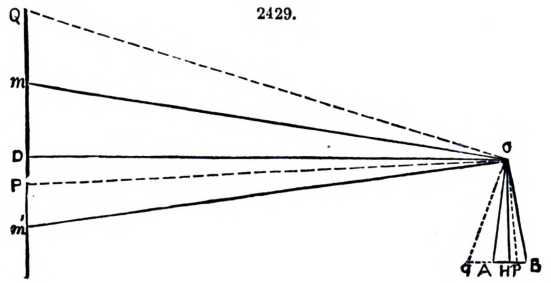

Hence we have the following proportion;—A B : O H :: $m\,m'$: O D; then O D, or the distance

$$= \frac{\text{O H} \times m\,m'}{\text{A B}}.$$

2430.

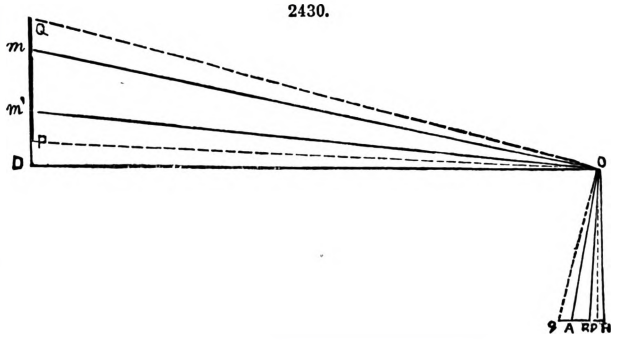

Again, A B : B H :: $m\,m'$: m' D; then m' D, where the perpendicular distance O D strikes $m\,m'$,

$$= \frac{m\,m' \times \text{B H}}{\text{A B}}.$$

When the horizontal distance O D is determined, any other height P Q in the direction of $m\,m'$ is readily found, for when the telescope is directed to P and Q, the microscope accurately determines $p\,q$; and as before shown, the triangles O P Q and O $p\,q$ are similar; then

$$\text{O H} : p\,q :: \text{O D} : \text{P Q};\ \therefore \text{ any height P Q} = \frac{p\,q \times \text{O D}}{\text{O H}}.$$

Since O H may be put = 1, 10, 100, 1000, 10000, and so on, the calculation becomes extremely easy.

We shall take another case, Fig. 2430, where $m\,m'$ is placed above the horizontal line O D.

Then, as in the former case, $m'O$ is perpendicular to OB, mO to OA, and DO to OH. ABH being horizontal, it is parallel to DO and perpendicular to $Dm'm$.

Therefore $\angle m'OH - \angle m'OD = \angle DOH$ a right angle;
and $\angle m'OH - \angle BOH = \angle BOm'$ „

Hence, the angle $m'OD$ = the angle BOH; and as the angles D and H are right angles, the triangles $m'OD$ and BOH are similar.

In the same way it may be shown that the triangles mDO and AOH are similar.

Consequently, the triangles $mm'O$ and AOB are similar, and we have, as before,

$$AB : OH :: mm' : OD; \text{ therefore, the distance } OD = \frac{OH \times mm'}{AB}$$

The horizontal distance OD being found, any other height PQ in the direction of mm' is instantly obtained, for when the telescope is directed to P and Q, the microscope gives pq; then, as before shown in the other cases, the triangles OPQ and Opq may be proved to be similar; then $OH : pq :: OD : PQ$; therefore, any height as $PQ = \frac{pq \times OD}{OH}$.

Principal Parts of the Omnimeter, Fig. 2428.—1. A powerful telescope cd, connected with
2. A powerful microscope ab turning on the same axis O.
3. A scale AB divided into half millimètres, moved by
4. A micrometer-screw, with
5. A circular disk ef divided into 500 equal parts; one turn of this disk moves the scale half a millimètre, this is the limit of its range.
6. A graduated circle g for measuring horizontal angles.
7. A level, fixed on 6, to adjust the horizontal plane.
8. A second level hi which can be placed on the telescope cd.
9. An arc kl for measuring vertical angles, without which the instrument would be incomplete.

This instrument is portable and easily manipulated; its parts are readily controlled, adjusted, and rectified. Fig. 2428 is of an instrument manufactured by Elliott, Bros., London.

Accompanying the instrument there is a levelling staff mm', Figs. 2429, 2430, not divided but of an invariable length, which length is defined by two white lines or marks on a black ground, one at the upper extremity at m, and the other at the lower extremity m'.

Mode of Operating with the Omnimeter.—First; place the staff in a vertical position at one extremity of the line to be measured, and the instrument properly adjusted at the other end; care must be taken that the micrometer is at zero.

Secondly; direct the telescope to coincide with the upper line of the staff, and clamp it; then looking through the microscope at the scale, which is advanced and the fractional part of a division measured by turning the micrometer-screw; we thus place the line of the scale (the microscope reverses) between the two horizontal cross-lines of the microscope and ascertain the fractional part of the scale between that line and the cross-lines. For example, suppose the number on the scale pointed out by the microscope to be over 67, that is, something more than 67, we affix to the right-hand side of this number the value of the fraction which is given by the vernier of the micrometer; suppose this number to be 203·5 out of the 500 between each of the two consecutive divisions of the scale, then the reading would be 67203·5. Should we observe an unnumbered division, we note the quantity of the preceding line and add 500 to the quantity given by the micrometer-circle, because 500 parts of this circle equal half a millimètre.

Thirdly; a similar operation has to be performed when the lower white line on the staff is sighted; it may be here remarked that it is very essential to point with the telescope and microscope in the same manner.

Suppose on a second reading from a second sighting we pass the unnumbered division on the scale between 66 and 67, and obtain 1·5 from the micrometer-circle, the number 66501·5 = 66000 + 500 + 1·5 is obtained.

The operation with the instrument is now completed, and we are in possession of the required data from which distances and altitudes may be calculated.

To determine Distances.—Take the difference of the two readings, which is 1202, in the present example, for

From	67203·5
Take	66001·5
Gives	1202·0 the difference.

1202·0 represents $0^m \cdot 001202$ in parts of a mètre.

For	$67203 \cdot 5 = 0^m \cdot 0672035$
and	$66001 \cdot 5 = 0^m \cdot 0660015$
	$0^m \cdot 0012020$

$OH = 0^m \cdot 15$, by the construction of the instrument, Figs. 2429, 2430.
$mm' = 10$ ft., the invariable length of the staff.
$AB = 0^m \cdot 0012020$ or 12020, if $0^m \cdot 15$ be put = 1500000.

Then referring to the proportions and Figs. 2429, 2430, we have the horizontal distance

$$OD = \frac{OH \times mm'}{AB} = \frac{0^m \cdot 15 \times 10}{0^m \cdot 0012020} = \frac{1500000}{12020} = 1247 \cdot 92 \text{ ft.}$$

It is evident that 1500000 becomes a constant quantity.

It is easily seen that the divisions of the scale of the micrometer may be of any convenient corresponding length, as they are only required to represent ratios, and may represent yards, mètres, or any other measure.

The base line of the instrument O H, measured from the point of rotation of the microscope, perpendicular to the scale, may be accurately determined by carefully measuring a distance from the instrument to the staff held in a perpendicular position, or O H may be found by a mathematical investigation. In finding the base line O H, we must be convinced that the optical axes-lines of the microscope and telescope are in the same vertical plane, or rather in parallel vertical planes, perpendicular to each other. To effect this adjustment we sight firstly, a staff of 10 ft.; and secondly, of a shorter length, say for example one of 5 ft., at the same distance, and see with the acquired data if the base line O H of the instrument remains in each case proportional to the distance; should this not be, the cross-lines of the microscope must be moved by the motion of their adjusting screw.

Levelling.—The manner of levelling consists in determining the lines A B and B H on the scale of the instrument; the first being proportional to the staff, and the other to the altitude or the height over or under the level of the instrument. The first of these lines, A B, we find, as before described, by sighting the staff; the second, B H, by determining on the scale the point H, called the stationary point of the scale, which is given by the optical axis-line of the microscope, when the telescope is brought horizontal by means of the level attached to it. The point H, marked (8), is constant and serves for all calculations in levelling operations; suppose, for example, (8) to be at 500010, on the scale, we then have the line B H by the difference between the number B acquired by sighting the staff, and the number of the stationary point H which, in the example that we have taken, gives

$$\begin{array}{r} 660015 \\ 500010 \\ \hline 160005 = \text{B H}. \end{array}$$

Then by substituting in the proportion, we have,

$$m' \text{D} = \frac{m\,m' \times \text{B H}}{\text{A B}} = \frac{10 \text{ ft.} \times 160005}{12020} = +133{\cdot}115 \text{ ft.}$$

The heights are termed positive or negative according as the scale readings are greater or less than the stationary point. We have adopted the following simple tabulated form for noting the readings when distances and altitudes are being measured.

Staff 10 ft.	From the Scale.	Omnimeter.		Levelling.			Observations.
		Constant of Distance.	Distance in feet.	Starting-point $\frac{0}{0}$.	Height in feet.		
Upper line	672035	15000000		500010	+	−	
Lower line	660015			660015			
	12020		1247·92	160005			
					133·115		

To avoid dividing the constant dividend, we may construct a small table, from which, by mere inspection, the distances may be taken.

Advantages of the Omnimeter.—First. That, having a constant starting-point for levelling, we have nothing further to do with the collimation of the optical axis of the telescope.

Second. That we are enabled to measure and to level at very long distances on horizontal or on inclined planes.

Third. That we have but one and the same unique operation for measuring both altitudes and distances.

Fourth. That the operator, always pointing the telescope on the same two well-defined lines of a staff of a known length, has not the same hesitation in reading as with an ordinary levelling staff, with which there is an element of guess-work not found in using the staff of the omnimeter.

2431.

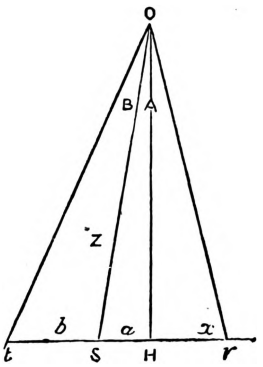

The length of the base, O H, of the instrument, and the position of the neutral point, $\frac{0}{0}$ or H, on the scale, may be determined mathematically as follows, without resorting to experiments.

Let $r\,s = a$, Fig. 2431, any distance measured on the scale, subtending the known angle A.

$s\,t = b$ any convenient distance measured in continuation, subtending the angle B.

Then put x = the unknown angle O r H, and Z = the unknown line O s.

Then we have

$$a : \text{Z} :: \sin. \text{A} : \sin. x;$$

and

$$\text{Z} : b :: \sin. (\text{A} + \text{B} + x) : \sin. \text{B};$$

$$\therefore\ a : b :: \sin. \text{A} \sin. (\text{A} + \text{B} + x) : \sin. \text{B} \sin. x$$

$$\therefore\ b \sin. \text{A} \sin. (\text{A} + \text{B} + x) = a \sin. \text{B} \sin. x.$$

$$\text{But } \sin.(A+B+x) = \sin.(A+B)\cos.x + \cos.(A+B)\sin.x,$$
$$\therefore\ b\sin.A\,[\sin.(A+B)\cot.x + \cos.(A+B)] = a\sin.B;$$
$$\therefore\ \sin.(A+B)\cot.x = \frac{a\sin.B}{b\sin.A} - \cos.(A+B);$$
$$\therefore\ \cot.x = \frac{a\sin.B}{b\sin.A\sin.(A+B)} - \cot.(A+B).$$

Hence x becomes known; and since $\sin.(A+B) : (a+b) :: \sin.(A+B+x) : ro$, $\therefore\ ro = \frac{(a+b)\sin.(A+B+x)}{\sin.(A+B)}$; and consequently,

$$rO\sin.x = OH = \frac{(a+b)\sin.(A+B+x)\sin.x}{\sin.(A+B)}$$

and $$rH = rO\cos.x = \frac{(a+b)\sin.(A+B+x)\cos.x}{\sin.(A+B)}.$$

DISTILLING APPARATUS. Fr., *Appareil distillatoire;* Ger., *Destillations Apparat;* Ital., *Apparecchia distillatore;* Span., *Aparato de destilacion.*

Distillation is the volatilization of a liquid in a closed vessel by heat and its subsequent condensation in a separate vessel by cold. The term is principally applied to the operation of extracting spirit from a substance by evaporation and condensation.

Destructive distillation is the distillation of substances at very high temperatures, so that the ultimate elements are separated or evolved in new combinations.

Dry distillation, the distillation of substances by themselves, or without the addition of water.

2432.

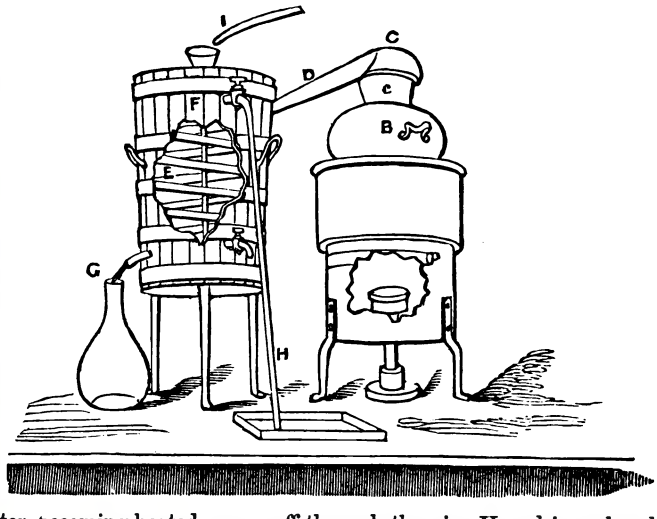

The apparatus commonly used consists of a copper boiler B, Fig. 2432, for holding the liquid to be distilled; C the head of the still, which is movable, lifts out at *c*, and is connected by D with the worm E. The worm is a pewter pipe coiled round in a tub F, and issuing at G. The steam from the boiler passing into the worm is condensed to the liquid state, being cooled by the water in contact with the worm; this water, becoming heated, passes off through the pipe H, and is replaced by cold water which is allowed to enter through I.

The Distillery of W. Macfarlane, of Glasgow, is one of the largest distilleries of the kind; it contains a great number of the most modern arrangements, all executed on a very large scale. The production of alcohol, in its abstract scientific principle, is the conversion of the starch contained in flour or grain into grape-sugar, and the subsequent conversion of this sugar into alcohol and carbonic acid. The conversion of starch into sugar is a mere change of arrangement of atoms, as far as chemistry is able to teach at present, that is, the starch and sugar contain the same elements—carbon, hydrogen, and oxygen—in the same percentage and proportion, only differently arranged, as we are not allowed to say crystallized with regard to a substance like starch. The conversion of starch into sugar is an effect of simple heat and moisture, and may be brought about in two ways. First, the slow action of the process of growth, by bringing the grain into a similar condition in which it commences growing in the soil, and checking this growth by drying when the percentage of sugar has arrived at its maximum; this is the operation of malting. The quicker process is the mashing of unmalted or raw grain, mixed with a certain proportion of malt, the diastase of the latter effecting the necessary conversion of the unmalted grain. In Macfarlane's distillery both processes are in use, and most of the spirits are made from a combination of malted and raw grain. The grain, after the process of growing, or the other preliminary operations of this growing process, must be dried, and this is effected in the malting kiln. The simplest form of kiln has a large floor of perforated bricks or tiles, upon which the malt is spread and exposed to the heated air arising from a fire below this floor. The perforated bricks have in more recent time been replaced by cast-iron plates, having a series of narrow slots or perforations for the transmission of the heated air. An arrangement of malting kilns in superposed stories or floors is carried out in Macfarlane's distillery, which is very economical in space, and probably also in fuel. There are three superposed floors, each perforated in the usual manner, and fitted in the centre with one or two discharging holes. The fire is in the ground floor below these kilns, and the fresh malt is brought upon the highest level, or top floor, first of all. The heated air, rising through all the

kilns, evaporates the gross bulk of the water, and, after a number of hours, the grain from the upper floor is discharged into the lower one through the central discharging hole, the contents of the second kiln being previously discharged into the lowest compartment nearest to the fire, where the malt is finally dried and removed ready for use. There are some difficulties in working these kilns, arising from the necessity of passing the steam formed by the malt in the lower chambers through the grain spread over the upper floors; but, as a whole, these three-story kilns work very well, and save much space as compared with single kilns. An extraordinary drying kiln is that used by Macfarlane for drying the unmalted grain. This is a large square building, carrying a perforated floor about 30 ft. or 40 ft. above the ground, and having no other floors or partitions throughout this entire height. Below the perforated floor an open passage is left for heated air, which is driven through at high speed by means of a large fan, and ascends through the floor and through the grain spread over it. The grain, when dried, is discharged through trap-doors or holes in the floor, and falls into the large space below, where it is allowed to accumulate up to the height of the air-passages, say within a few feet from the drying floor. This enormous store of dried grain forms a kind of pressure reservoir, delivering grain in a continuous stream from its bottom through tubular passages fitted with Archimedian screws. This kiln can dry 1200 to 1500 bolls of grain per day. The fan we understand to be 14 ft. diameter, and the heating of the air is effected by its being passed over a series of pipes heated by steam, the air outside and the steam inside the pipes moving in opposite directions. One of the most imposing articles in this distillery is the vessel in which the malt is mixed with hot water or mashed. This is a cast-iron cylinder 30 ft. in diameter and 8 ft. deep to a perforated false bottom, the real bottom being some inches below this. In the centre is a column round which a set of mechanical mixers turn and revolve, driven by gearing working in a circular rack, which runs all round the circumference of this large vessel. The capacity of this vessel is 30,000 gallons, and it is filled with fresh materials every six or eight hours. The capacity of this vessel virtually gives the limit of the productive power of this establishment, as all the material converted into spirits there must pass through this apparatus. The function of the mashing process is to extract the sugar from the grain by dissolving it in water, and to draw off the wort or saccharine liquor ready for fermentation. The liquor, as drawn from this vessel, is pumped into fermenting vats made of wood, and hooped with iron. There are numerous vessels of this kind in this distillery, each holding from 9000 gallons upwards; but the most remarkable fermenting vats are two vessels of extraordinary size, each capable of holding 52,000 gallons of liquor. The fermentation is a process in which no mechanical means are employed. The sugar, under the influence of a moderate temperature, and stimulated by the action of yeast, decomposes spontaneously, and, without taking up any other element from either air or water, is divided into alcohol and carbonic acid, these two substances, when added together upon paper, making up the composition of sugar, although, in reality, no chemist has ever succeeded in producing sugar from these two substances. The wort filled into the fermenting vat yields about 10 per cent. of refined spirits, but for obtaining these latter it is necessary to separate the alcohol from the rest of the liquor by means of distillation. This last process effects no chemical change; its *rationale* is simply to separate the more volatile alcohol from the less volatile liquor in which it is contained, by raising the mixture to a temperature which is above the boiling-point of the first, and below that of the second substance. The old and primitive mode of operation consists in using a large still made of copper, and communicating with a condenser, and heating this still by means of the direct action of a fire maintained below it. The second and more modern form is to distil the alcohol by means of steam, which passes through a series of cellular vessels through which the fermented liquor is slowly moving in a continuous stream. The action of this system is continuous, and far more under control than the former. Nevertheless, both systems are at present in use, and must be simultaneously maintained to meet the demand for different kinds or differently-flavoured spirits. The distillation by direct heat produces the Irish whisky, which is without doubt the best whisky in the world; while the other method yields Scotch whisky. The difference is very material, as the former spirit contains a series of volatile products besides alcohol, which are removed from the product in the process of distillation by steam. The most noteworthy amongst these admixtures of Irish whisky is a small percentage of fusel oil, a spirit of similar composition to that of alcohol. It is obvious, therefore, that the flavour of some kinds of spirit is bought at a high price, as far as their effect upon the health of the consumer is concerned. There is, however, no marketable spirit entirely free from volatile products different from alcohol, most of which are of a less noxious character than fusel oil. A new set of stills for Irish whisky has recently been set to work at Macfarlane's distillery. It consists of three copper stills, delivering their products from one to the other in succession, so as to distil the product three times over. The first still, containing the fresh liquor from the fermenting vat, has a capacity of 13,690 gallons; the second still holds 6820 gallons of weak spirits, and the third still has 4620 gallons measurement. This whole plant is of a very striking appearance, and executed with great nicety of workmanship.

Figs. 2433 to 2436 are transverse sections of this distillery.

These illustrations represent a 20-qr. mashing plant, equivalent to the production of about 2000 gallons of spirits in the usual weekly distillery period. It is arranged to work entirely with steam, and to have no pumping, except that of the worts, from the underback to the refrigerator. In the engravings the refrigerator is shown over the fermenting backs, but it may be placed with equal advantage in proximity to the underback. The cooling floor is not shown, as it is quite unnecessary where a Morton refrigerator can be applied.

Beneath the malt-stores are the steam-engine, steam-boilers, and malt-mills. The malt being kept under bond, the commencement of a period begins by giving the excise officer notice to grind, and the malt is measured out in his sight into the unground malt hopper. From this it descends to be crushed in the mill *e*, rising by means of elevators to ground malt hopper *g*. For the sake of the general reader, we may mention that the grinding is all performed under lock and key (the

miller being locked up in the mill), and a fresh notice is required before the malt can be used in mashing. The mashing process is exactly the same as that performed in breweries; the malt falling from the hopper, meets, in the intermediate masher *h* with the hot water, and when the two have properly mingled together they fall into the mash tun *j*, where they are still further amalgamated. The proper heat at which the malt is wetted, and at which the contents of the mash tun stand when finished, furnishes the key to this operation. After resting for a time to allow of the conversion of the malt into sugar, the extract is allowed to drain off into the under-back *k*, which, in the plans shown, is intended to act as a jack-back, and is large enough to allow of the worts being declared in it before being pumped to the fermenting backs. It is likewise

2433.

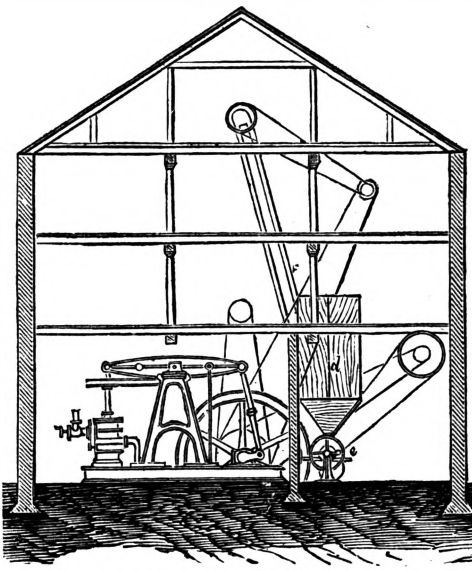

2434.

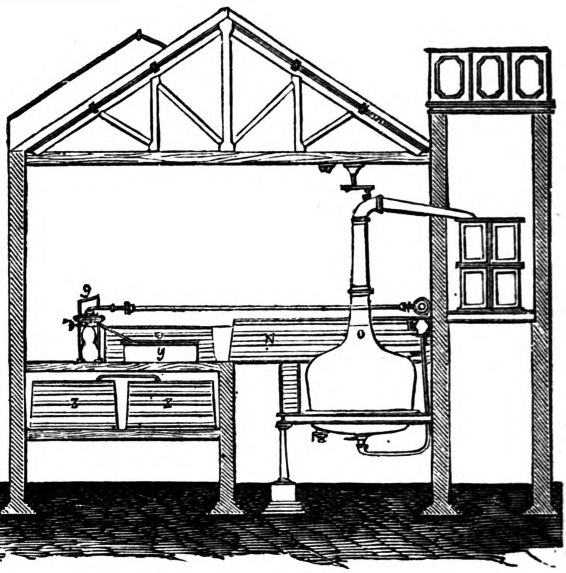

2435.

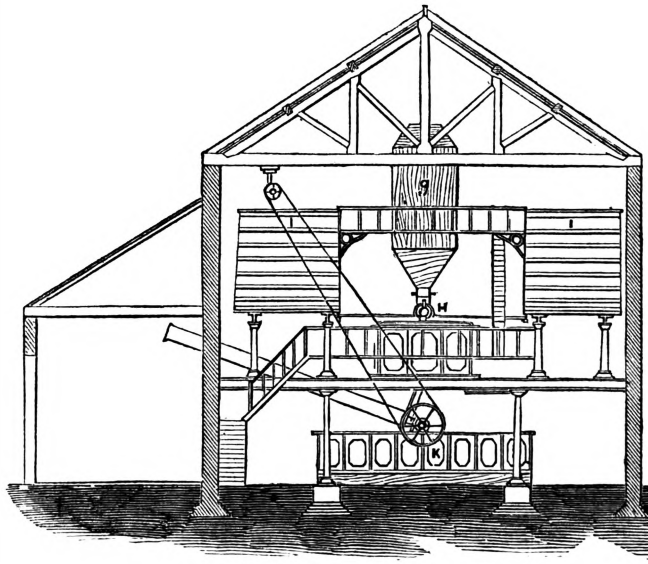

2436.

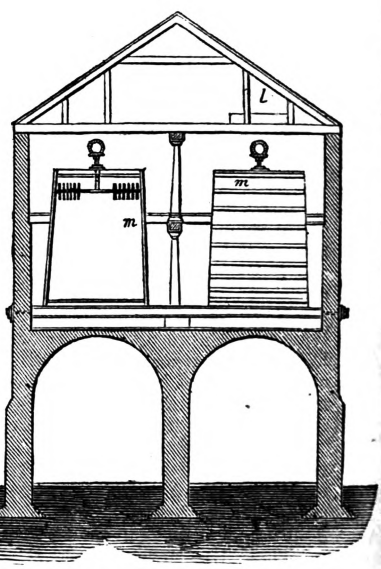

proposed that the sprinkling system, as practised by brewers, be employed to complete the extraction of the goods after the first mashing; and this being the case, the sprinkling on of hot water over and the draining off the wort from below the goods would continue until the gravity assumed for declaration (generally about 10·50) was reached. When a sufficient quantity has been got off for fermentation, the goods are mashed up again, and re-drained so long as any extract remains. These weak drainings are pumped into the sparge-back *i* (or, as the Excise have it, brewing copper), and heated up for use in place of water in the next day's mashings. In passing, it may be remarked that the sprinkling system ought to be fully adopted in malt distilleries, as with it in declaring at a gravity of 1·050 all extract of any use can be taken off the malt, and

sparges, with their very doubtful advantages, done away with, or, at all events, reduced to within lower limits than is the case at present.

To return to the circle of operations, after declaration of quantity and strength, the wort is pumped to the refrigerator *b*, by the wort-pump attached to the steam-engine, and cooled to from 68° to 78° Fahr. (according to the size of the wash-back), and run into the wash-backs *m m m*, and 2 per cent., or thereabouts, of yeast added. The fermentation is completed in from 36 to 72 hours, all the saccharine matter being converted into alcohol; and the wort, which stood at a specific gravity of 1·050, standing as wash at the gravity of water, 1000, or even under, when the attenuation has been perfect.

In due course the wash is run into a wash-charger, its attenuation having been declared for distillation. From the wash-charger the wash-still *o* is charged, and evaporation began as soon as possible. The evaporated products pass into the worm *p*, whence, being condensed, they run across the still, the house, through the safe *q*, into the low-wine receiver *r*. From the low-wine receiver *r* the feint-still *s* is charged; and the charge, evaporated and condensed in the worm *t*, is run through the safe into the feints receiver *u*. From the feints receiver *u* the spirit-still *v* is charged; and the charge evaporated, and condensed in the worm *w*, is, like the others, run through the safe, and into the spirit receiver *y*, a marketable article. From *y* it is again declared as to the strength and quantity, and run into the cellar vats *z z*, and again racked off into casks for consumption and bonded in duty-free warehouses.

While this is the routine from vessel to vessel between fermenting-back to spirit-store, yet the fact is that no two parts of the country pursue exactly the same practice. In the Highlands, where high-flavoured whisky is wanted and made, a large portion of the spirit is taken from the low-wines; while in the Lowlands, where a plain spirit is made, it is taken mostly from the feints. The arrangements of this distillery provide for a mixture of clear low-wines and feints to produce the spirit.

The foul and weak distillates from wash and feints stills are retained in the low-wine receiver for further distillation, the clear and strong products only going forward to the feints receiver, to charge the spirit-still; the latter still is placed so high that the feints from it gravitate back to the feint-still, and are accounted for in the stock at the end of the period.

The purification of spirit by repeated boiling results in the constant decrease of the boiling-point, as it increases in purity; and, of course, as the boiling-point lowers, towards that of pure alcohol, or 173° Fahr., so is the distiller enabled to separate the distillates coming off at low temperatures from those which require a higher temperature to cause them to evaporate.

Inattention to, and ignorance of, the principles involved in the evaporation of the various substances of vegetable origin, mixed up with distilling wash, is the principal cause of so much vile-flavoured and unwholesome, or, in fact, poisonous material, under the name of spirit, being brought into the market.

Distilled Spirits.—The varieties of ardent spirits are obtained from fermented liquids by distillation, so that they consist essentially of alcohol more or less diluted with water, and flavoured either with some of the volatile products of the fermentation, or with some essential oil added for the purpose.

Brandy is distilled from wine, and coloured to the required extent with burnt sugar (caramel). Its flavour is due chiefly to the presence of œnanthic ether derived from the wine. The colour of genuine pale brandy is due to its having remained so long in the cask as to have dissolved a portion of brown colouring matter from the wood, and is therefore an indication of its age. Hence arose the custom of adding caramel, and sometimes infusion of tea, to impart the astringency due to the tannin dissolved from the wood by old brandy.

Whisky is distilled from fermented malt which has been dried over a peat fire, to which the characteristic smoky flavour is due.

Gin is also prepared from fermented malt or other grain, and is flavoured with the essential oil of juniper, derived from juniper berries, added during the distillation.

Rum is distilled from fermented molasses, and appears to owe its flavour to the presence of butyric ether, or of some similar compound.

Arrack is the spirit obtained from fermented rice.

Kirschwasser and *maraschino* are distilled from cherries and their stones, which have been crushed and fermented.

Some varieties of British brandy and whisky are distilled from fermented potatoes, or from a mixture of potatoes and grain, when there distils over, together with ordinary alcohol, another spirit belonging to the same class, but distinguished from alcohol by its nauseous and irritating odour. This substance, which is known as *potato-spirit*, *amylic alcohol*, or *fousel oil* ($C_{10}H_{12}O_2$), also occurs, though in very minute quantity, in genuine wine-brandy. The manufacturers of spirit from grain and potatoes remove a considerable part of this disagreeable and unwholesome substance by leaving the spirit for some time in contact with wood-charcoal.

Alcohols and their Derivatives.—The alcohols are all composed of carbon, hydrogen, and oxygen; the members of the series represented by common alcohol always contain two equivalents of oxygen, and two more equivalents of hydrogen than of carbon. The number of equivalents of carbon and hydrogen is always an even number, so that the *general formula of an alcohol of this series* may be written thus, $C_{2n}H_{2n} + {}_2O_2$. Thus, in ordinary or *vinic* alcohol, $C_4H_6O_2$, $n = 2$; in wood-spirit or *methylic* alcohol, $C_2H_4O_2$, $n = 1$; in potato-spirit or *amylic* alcohol, $C_{10}H_{12}O_2$, $n = 5$.

These alcohols constitute, therefore, a truly homologous series, of which many members, however, remain to be discovered.

The following Table includes the alcohols of this series which are at present known:—

Chemical Name.	Source.	Equivalent Formula.	Common Name.
1. Methylic alcohol ..	Destructive distillation of wood	$C_2H_4O_2$	Wood naphtha.
2. Ethylic „ ..	Vinous fermentation of sugar	$C_4H_6O_2$	Spirit of wine.
3. Propylic „ ..	Fermentation of grape-husks	$C_6H_8O_2$	
4. Butylic „ ..	Fermentation of beet-root	$C_8H_{10}O_2$	
5. Amylic „ ..	Fermentation of potatoes	$C_{10}H_{12}O_2$	Fousel oil.
6. Caproic „ ..	Fermentation of grape-husks	$C_{12}H_{14}O_2$	
7. Œnanthic „ ..	Distillation of castor-oil with potash ..	$C_{14}H_{16}O_2$	
8. Caprylic „ ..	Fermentation of grape-husks	$C_{16}H_{18}O_2$	
10. Rutic „ ..	Oil of rue	$C_{20}H_{22}O_2$	
12. Lauric „ ..	Whale oil	$C_{24}H_{26}O_2$	
16. Cetylic „ ..	Spermaceti	$C_{32}H_{34}O_2$	Ethal.
27. Cerylic „ ..	Chinese wax	$C_{54}H_{56}O_2$	Cerotine.
30. Melissic „ ..	Beeswax	$C_{60}H_{62}O_2$	Melissine.

The usual gradation in properties attending the gradation in composition among the members of a homologous series, is strikingly exemplified in the class of alcohols. The first eight members of the group, linked together as they are by an almost common origin (being derived, with one exception, from the fermentation of substances nearly allied, and that exception being a product of destructive distillation which may be regarded as an accelerated fermentation), and by a regularly ascending composition, would be expected to resemble each other in their properties far more closely than the other members of the class. Accordingly we find that methylic, ethylic, propylic, butylic, amylic, caproic, œnanthic, and caprylic alcohols, are all liquid at the ordinary temperature, that they all possess peculiar and powerful odours, and may be readily distilled unchanged. Among these, however, the gradation is not to be overlooked. The two first, methylic and ethylic alcohols, may be mixed with water in all proportions; but the third, propylic alcohol, though freely soluble in water, is not so to an unlimited extent; whilst butylic alcohol is less soluble, and amylic alcohol may be said to be sparingly soluble in water. Caproic alcohol, the next member, is insoluble in water: whilst caprylic is not only insoluble, but possesses an oily character, leaving a greasy stain upon paper.

In their boiling-points, and the specific gravities of their vapours, a similar gradation is observed.

Alcohol.	Boiling-point.	Vapour Density.
	°	
Methylic	149·9 F.	1·12
Ethylic	173	1·61
Propylic	205	2·02
Butylic	233	2·59
Amylic	269·8	3·15
Caproic	299–309	3·53
Œnanthic	327–343	..
Caprylic	356	4·50

One equivalent of each of these alcohols yields *four volumes* of vapour; or, in other words, if a given weight of the alcohol corresponding to its equivalent number be converted into vapour, that vapour will occupy four times as much space as would be occupied by an equivalent of oxygen at the same temperature and pressure, or twice the space occupied by an equivalent of hydrogen, or of water converted into vapour under the same conditions.

The higher members of the group of alcohols are solid fusible bodies more nearly approaching to waxy or fatty matters in their nature, and not susceptible of distillation without decomposition. Far less is known of these than of the alcohols containing less carbon.

Wood charcoal presents features which arrest attention on account of its specific properties, as of the influence exercised by the method adopted for obtaining it, upon its fitness for the particular purpose which it may be destined to serve.

If a piece of wood be heated in an ordinary fire it is speedily consumed, with the exception of a grey ash consisting of the incombustible mineral substances which it contained; if the experiment were performed in such a manner that the products of combustion of the wood could be collected, these would be found to consist of carbonic acid and water; woody fibre is composed of carbon, hydrogen, and oxygen ($C_{12}H_{10}O_{10}$), and when it is burnt, the oxygen, in conjunction with more oxygen derived from the air, converts the carbon and hydrogen into carbonic acid and water. But if the wood be heated in a glass tube, closed at one end, it will be found impossible to reduce it, as before, to an ash, for a mass of charcoal will remain, having the same form as that of the piece of wood; in this case, the oxygen of the air not having been allowed free access to the wood, no true combustion has taken place, but the wood has undergone *destructive distillation*, that is, its elements have arranged themselves, under the influence of the high temperature, into different forms of combination, for the most part simpler in their chemical composition than the wood itself, and capable, unlike the wood, of enduring that temperature without decomposition; thus, it is

merely an exchange of an unstable for a stable equilibrium of the particles of matter composing the wood.

The vapours issuing from the mouth of the tube will be found acid to blue litmus paper; they have a peculiar odour, and readily take fire on contact with flame. The charcoal which is left is not pure carbon, but contains considerable quantities of oxygen and hydrogen, with a little nitrogen, and the mineral matter or ash of the wood.

When the charcoal is to be used for fuel, it is generally prepared by a process in which the heat developed by the combustion of a portion of the wood is made to effect the charring of the rest. With this view the billets of wood are built up into a heap, Fig. 2437, around stakes driven into the ground, a passage being left so that the heap may be kindled in the centre. This mound of wood, which is generally from 30 to 40 ft. in diameter, is closely covered with turf and sand, except for a few inches around the base, where it is left uncovered, to give vent to the vapour of water expelled from the wood in the first stage of the process. When the heap has been kindled in the centre, the passage left for this purpose is carefully closed up. After the combustion has proceeded for some time, and it is judged that the wood is perfectly dried, the open space at the base is also closed, and the heap left to smoulder for three or four weeks, when the wood is perfectly carbonized. Upon an average 22 parts of charcoal are obtained by this process from 100 of wood.

2437.

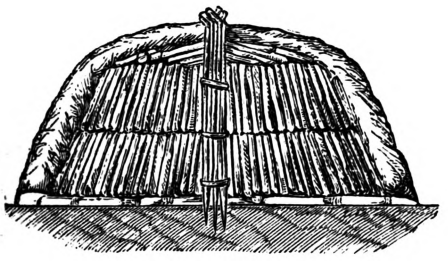

2438.

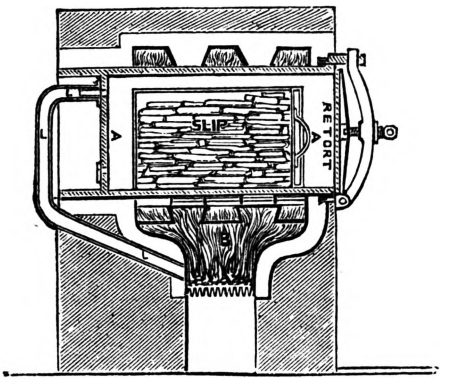

A more economical process for preparing charcoal from wood consists in heating it in an iron case or *slip*, F, Fig. 2438, placed in an iron retort A, from which the gases and vapours are conducted by the pipe L into the furnace B, where they are consumed.

The infusibility of the charcoal left by wood accounts for its very great porosity, upon which some of its most remarkable and useful properties depend. The application of charcoal for the purpose of sweetening fish and other food in a state of incipient putrefaction has long been practised, and more recently charcoal has been employed for *deodorizing* all kinds of putrefying and offensive animal or vegetable matter. This property of charcoal depends upon its power of absorbing into its pores very considerable quantities of the gases, especially of those which are easily absorbed by water.

Dr. Normandy's Marine Aërated Fresh-water Apparatus.—Fig. 2439 is a front elevation of the apparatus.

Fig. 2440 is an end view of the apparatus.

Fig. 2441 is a back elevation of the apparatus.

Fig. 2442 is a plan of the apparatus.

Fig. 2443 is a vertical section of the evaporator, condenser, and refrigerator of the apparatus.

Fig. 2444 is a sectional plan of the apparatus.

In all the drawings the same letters represent the same parts.

A shows the entrance-pipe for the sea water. When the apparatus is put on board under the water-line, as is the case generally with steamers, this pipe is connected to a large cock communicating with the sea through the sides of the ship. When the apparatus is placed on deck, as is generally the case with sailing ships, or on land, this pipe is flanged to a much smaller pipe connected with a pump, by means of which the apparatus is supplied with water from the sea. In the first case, on opening the large cock to which this pipe is connected, or, in the second case, on working the pump, the sea water at once penetrates into the refrigerator B. The pipe A extends, as is seen, the whole length of the refrigerator, merely for the purpose of allowing of the apparatus being connected as occasion may require.

a, Figs. 2441. 2442, and 2444, is a large pipe connecting the refrigerator B with the condenser D, so that the sea water entering from the sea through A passes through *a*, and thus fills up the condenser D, and through pipe F feeds the evaporator H, by means of pipe G', Fig. 2439, from the feed-box G, also Fig. 2439.

B, box or refrigerator. It is a horizontal cylinder, the construction of which is shown in Figs. 2443, 2444; the sea water being introduced first into this refrigerating cylinder, and consequently in its coldest state, circulates round a sheaf of pipes *k k*, Fig. 2443, between the caps C C, Figs. 2443, 2444, and cools the water which has been condensed in the tubes of the evaporator H and of the condenser D.

C, caps of the refrigerator B, so arranged, as may be seen in Fig. 2443, that by means of the divisions reserved in the said caps, the condensed water is made to traverse to and fro through the

different rows of pipes *kk*, Fig 2443, consecutively. From this refrigerating cylinder B the sea water passes through the pipe *a*, Figs. 2441, 2442, and 2444, into the evaporator H.

D, condenser. It is a cylinder containing another sheaf of pipes *m*, Fig. 2443, fastened between two caps M, Fig. 2443, and into which tubes *m* the aërated steam from the evaporator H is condensed by the sea water of the said condenser, and surrounding the said pipes *m*, Fig. 2443.

E, large outlet-pipe, which, when the apparatus is put below the water-line, as is generally the case in steamers, communicates with the sea through the sides of the ship by a large cock. When the apparatus is placed on deck, as is generally the case with sailing ships, or on land, this large pipe is turned-upwards, as represented by the dotted lines, and lengthened, so that the water which is forced through the apparatus by means of the pump, or otherwise, may be raised a few feet above the whole apparatus, so that the level of the sea water may be above the feed-pipe F. This turned-up pipe is connected by means of a flange, or otherwise, to a smaller pipe *e*, Fig. 2441, of about the same diameter as that of the suction-pipe of the pump, and a portion of the sea water originally pumped or let in is thus returned to the sea. This flow should be such that the condenser may remain hot down to the point whence pipe E protrudes. This circulation on board steamers, or whenever the apparatus is placed below the sea-level, is kept up by the difference of temperature of the sea water, which is hotter at E than it is at A. When the apparatus is placed on deck or on land, the circulation is of course kept up by the pump.

2439.

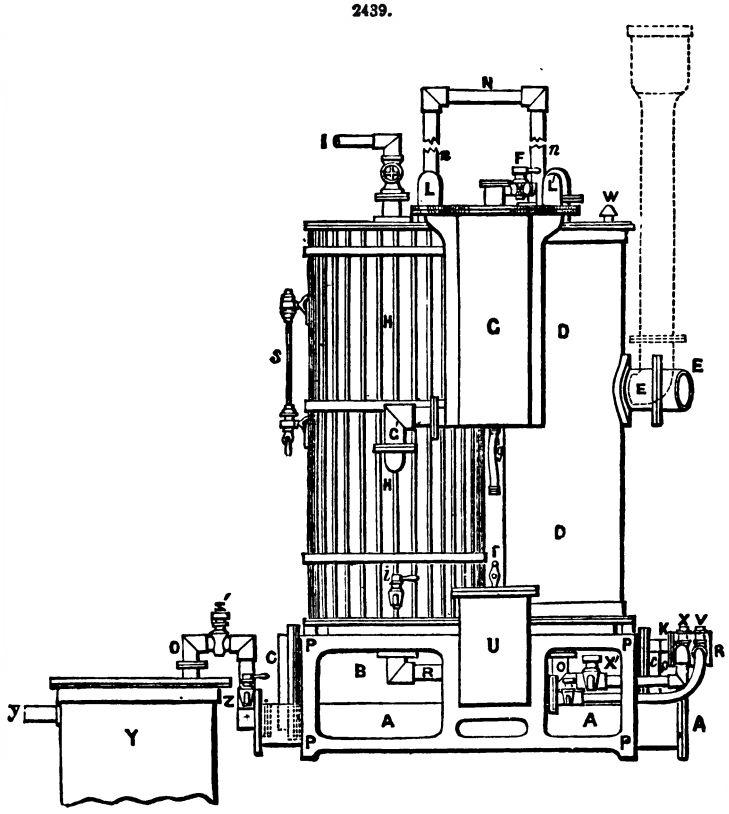

2440.

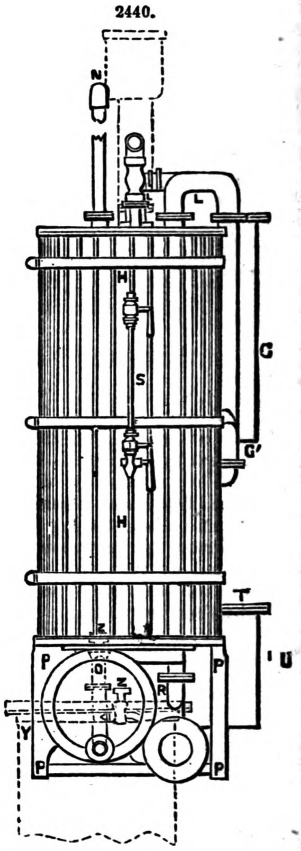

e, overflow-pipe for the escape of the excess of sea water, which it is necessary to pump through the apparatus when it is placed on deck, or on land—that is to say, when it is erected higher than the natural level of the sea.

F, feed-pipe inserted into the condenser D. The apparatus being placed below the level of the sea, as on board steamers, or below that of the sea water in the large turned-up pipe in which it is forced by a pump, as we have already said in explaining letter E, the water will naturally rise to the top of the condenser, and up the stand or arch pipe N, up to the level *n*, Fig. 2443, of the sea water round the ship, or of the sea water in the turned-up pipe E *e*, marked in dotted lines; and as the steam from the evaporator enters the sheaf of pipes from the condenser D, at the top of the said condenser, the temperature there is kept as high as 206°, and even sometimes 208° Fahr.; the temperature gradually decreasing towards the bottom of the apparatus. This feed-pipe F is provided with a cock, which is generally left open while the apparatus is at work, and it is through it that the hot water from the top of the condenser is led into the priming and feed box G.

G, priming and feed box. It is a box into which any salt which might be mechanically projected by ebullition is arrested and carried back again by pipe G' into the evaporator H. This priming box contains a float provided with a valve, and so adjusted that when the evaporator is filled with the proper quantity of sea water, the float, being buoyed up, will close the valve, and

thus prevent the flow of any more salt water into it; on the contrary, when the level of the sea water in the evaporator, by reason of the water evaporated, or of the brine which flows constantly therefrom through cock *i*, becomes reduced below the proper point, the float, sinking in the box, opens the valve, and more salt water is then admitted through the pipe F into the box G, and thence through the pipe G' into the evaporator, so as to restore the proper level. This pipe F is provided with a cock, which is placed there merely for the purpose of effectually stopping the flow of the sea water into the condenser when the apparatus is not at work, and likewise in order that, in case the float, or the valve of the float, should become damaged or out of order, the working of the apparatus may continue in a perfect manner, the necessary supply of salt water to be admitted into the evaporator being then regulated by hand. The tail of the valve is covered with a disc of vulcanized india-rubber *g*, so that on pushing the caoutchouc covering with the finger, the operator may be enabled, at any time, to feel whether the float is acting properly.

g is a sheath or tube of vulcanized india-rubber, into which a guiding rod attached to the lower part of the float is hanging freely, so that by grasping that guiding rod through the tube of india-rubber, the operator may freely move the float to which it is attached up and down, or rotatorily, in order to ascertain whether it is acting properly or not, or for the purpose of disengaging any impurity which might have accidentally lodged between the valve and its seat.

2441.

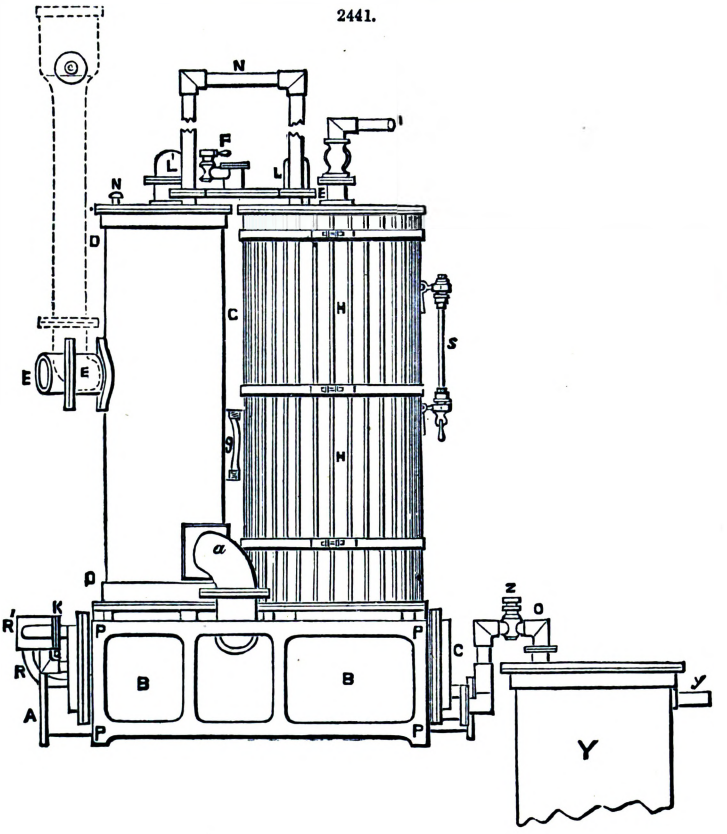

H, evaporator or cylinder, containing the evaporating tubes and the sea water, part of which has to be evaporated, Fig. 2443. This cylinder is felted over and covered with wood, or otherwise, to prevent loss of heat by radiation.

I, steam-pipe from a boiler, leading the steam thereof, more or less under pressure, into the vertical evaporating tubes of the evaporator H.

i, brine-cock, which is left constantly open to a certain extent while the apparatus is at work, so as to prevent saturation and incrustation, by allowing a constant discharge of sea water.

J, Fig. 2443. *j*, Fig. 2443.

2442.

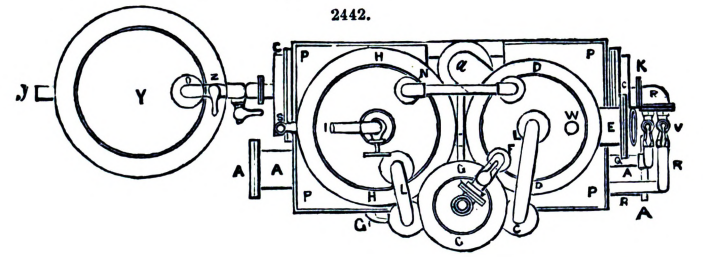

K, flange uniting the refrigerator B with the mixing pipe R', into which the condensed non-aërated fresh water of the pipe R from the evaporator, and the condensed aërated fresh water of the pipe Q from the condenser are led, so that the mixture of these two fresh waters may be refrigerated. *k k*, Fig 2443.

L, pipe conducting the mixture of steam and air from the evaporator H into the priming and feed box G, and thence through pipe L' into the condensing tubes within the condenser D.

L', pipe conducting the mixture of steam and air from the priming box G into the tubes within the condenser D; the steam having first deposited in the said priming box any salt water which might otherwise contaminate it.

M, Fig. 2443. *m*, Fig. 2443.

N, air-pipe leading the air which separates from the sea water in the condenser D into the steam room or chamber of the evaporator H. This air-pipe must, of course, be considerably higher than the level of the sea water round the ship, or of the sea water in the turned-up pipe E, so that

the salt water of the condenser may not, under any circumstances, be able to pass through it into the evaporator, which might be thus overfilled. This aëration is accomplished as follows;—

As the steam from the evaporator enters the pipes within the condenser at the top, through the pipe L′, it follows that the sea water at the top of the condenser D is brought, as we have already said under letter F, to a temperature which at the top reaches 206° or 208° Fahr.; this temperature gradually diminishes from the top downwards, so that at a zone corresponding to that of the exit-pipe E the temperature is reduced to about 140°. As the air contained naturally in water begins to separate therefrom at about 130°, it follows that the air contained in the condensing sea-water between E and the top of the condenser is separated; but when it has reached the top of the said condenser, it passes through the air-pipe N, and is carried by it to the evaporator H, where it mixes intimately with the secondary steam there produced by the evaporating pipes. This mixture of air and steam passes then through the pipes L and L′ into the tubes *m*, Fig. 2443, and the air is absorbed during the condensation of this secondary steam with which it was mixed, the condensed water so produced being thus super-aërated, and subsequently mixed through pipe Q, in the larger pipe R′, with the non-aërated water coming from the evaporator through pipe R. The mixed waters in traversing the refrigerator B are cooled down to the temperature of the sea water outside, and flow at O in the state of perfectly cold water, thoroughly aërated, but still retaining the bad taste and odour which always result from distillation, and of which it is deprived only after it has passed through the filter Y.

2443.

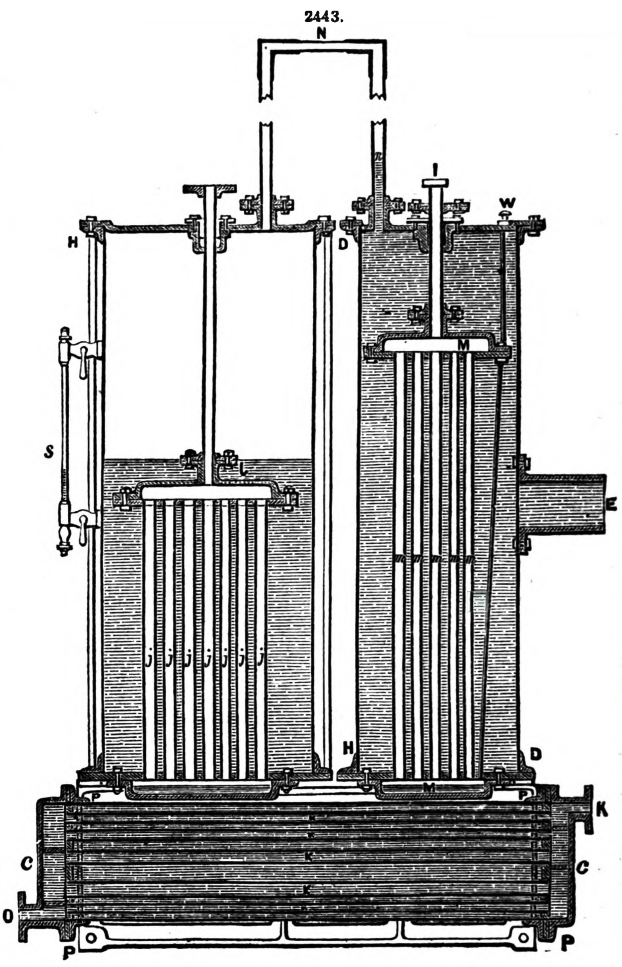

2444.

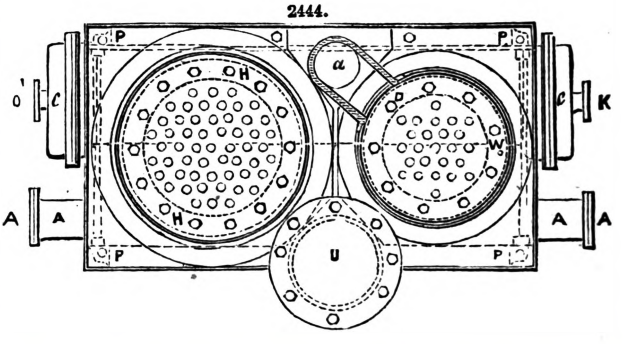

n, level to which the sea water is rising in the air-pipe. The height of this air-pipe must always be considerably greater than the level of the sea round the ship, or of the sea water in the turned-up pipe E, in order that there should not be any chance of the sea water passing into the evaporator through the said air-pipe.

O, exit-pipe, through which the mixed distilled waters, after being refrigerated, pass into the filter Y.

P, framing to which all the apparatus is bolted.

Q, exit-pipe for the condensed super-aërated water from the condenser D, which pipe is connected, like pipe R, with a larger tube R, in which it begins to mix with the condensed non-aërated water from the evaporator H.

R, exit-pipe for the condensed non-aërated water from the evaporator H, which pipe, after leading to and issuing from the steam-trap U, is connected, like pipe Q, with a larger tube R′, in which it begins to mix with the condensed aërated water from the condenser D.

R′, larger tube, in which the two kinds of fresh waters from the evaporator and from the condenser begin to mix.

S, water-gauge. T, air-cock of the steam-trap U.

U, steam-trap. It is a box containing a float provided with a plunger, acting in such a way that when the box contains only steam, or a quantity of condensed water insufficient to buoy the

float, the plunger closes the exit-pipe R; but as soon as condensed water has accumulated in the box in sufficient quantity to buoy up the float, the plunger of course no longer closes the exit-pipe R, and the condensed water may then escape as fast as it is produced.

V, cock admitting the condensed non-aërated water from the steam-trap U into the larger tube R'. This cock is ordinarily left open, and is used only in case the float of the steam-trap should become out of order, in which case the said float may be altogether removed by turning the steam off, and simply unbolting the cover, after which the escape of the condensed water is regulated by adjusting the cock so that nothing but the condensed water may flow out; this cock is also made use of for the purpose of cleaning the evaporator, Fig. 2443.

V', cock for cleaning the inside of the evaporating tubes, or for the purpose of obtaining fresh boiling hot water, which is done by shutting cock V, and opening cock V'.

W, breathing pipe, Fig. 2443. It is a pipe one end of which is in communication with the lower cap M of the condensing pipes *m*, and the other end is open to the atmosphere. The object of this pipe is not only to remove pressure from the cylinders, but likewise to afford an exit for the excess of air generated.

X X', two cocks placed between the condenser D and the larger tube R', for the purpose of obtaining hot fresh water, and likewise for the purpose of cleaning the condenser. This is done by cutting off the communication between the condenser D and the said larger tube R'; to do this, shut cock X, and open cock X'.

Y, filter for receiving the condensed water from both pipe R of the evaporator and pipe Q of the condenser, as they issue in a mixed and cold state from the refrigerator at O; the fresh water loses its empyreumatic odour in passing through the filter, and issues at *y* in the state of perfect fresh water, which cannot be distinguished by flavour from that of the very finest springs.

Z Z', two cocks placed between the refrigerator and the filter, for the purpose of cleaning the refrigerator, which is done by closing the communication between it and the filter; for this purpose shut Z and open Z'.

C, caps of the refrigerator already described, C, Fig. 2439, but shown in section, Fig. 2443.

D, condenser containing the sheaf of pipes *m*, surrounded by the sea water, which serves to condense the aërated steam from the evaporator H, and to produce the air wherewith that steam is aërated.

H, evaporator. It is a cylinder into which the sea water is allowed to rise so as to cover the upper cap J of the evaporating pipes *j* in that cylinder, and no more, the level being kept at that height either by a self-acting float, or by manipulation, as was said in describing G, Fig. 2443.

I, steam-pipe from a boiler. This steam-pipe brings steam more or less under pressure from any description of boiler; it passes through a stuffing box, reserved in the cover of H, and is connected to the upper evaporating cap J of the evaporating tubes *j*.

J, cap covering the sheath of tubes *j j*, in which the steam from the boiler diffuses itself, and is condensed by giving off its latent heat to the sea water round the said evaporating tubes; after which it flows as distilled, but non-aërated, water to the inlet K, in one of the caps C of the refrigerator B. It must here be observed that, although the sea water in H H is at a boiling temperature after the first few minutes of the apparatus being put into action, yet it will condense the steam in the tubes *j j j*, because that steam, being under pressure, is necessarily of a higher temperature than the water in H H, which is not under pressure. Thus, whilst the pressure-steam in the tubes *j j j* is condensed, non-pressure steam is generated from the water in H H outside of them. This latter or secondary steam passes through the tube L L' to the upper cap M of the tubes *m m m* in the aërating cylinder D D, where it also is condensed, and passes through the lower cap M and a pipe Q, Fig. 2439, to the inlet K, mixing at once with the distilled water from the boiler through the tube R', already described.

k, sheaf of pipes of the refrigerator B, for the purpose of cooling the condensed water. This has already been described in B and C, Fig. 2439.

M, caps covering the end of the sheaf of tubes placed in the condenser D. See the explanation given at letter D, Fig. 2439.

m, sheaf of pipes placed between the two caps M, for the purpose of condensing the aërated steam from the evaporator H.

W, breathing pipe, one end of which communicates with the lower cap M of the condenser, while the other end is open to the atmosphere. This pipe serves to remove pressure from the cylinders, and for the exit of the excess of air. When water or steam issues through that pipe, it is a proof either that too much steam is sent in, or that it is at too great a pressure.

Instructions for Working the Apparatus.—The first thing to be done is to charge the apparatus with water. This is done by establishing a communication between the external sea water and the apparatus. If the latter is placed below the level of the sea, this is easily done by turning on the cocks of the large tubes A and E, and the cock F of the feed-pipe, whereupon the salt water fills both the refrigerator B and the condenser D to a certain distance *n* of the air-pipe corresponding with the level of the sea. It then passes through the feed-cock F, thence through the feed-box G, down through the pipe G', into the evaporator H, up to a line standing at about the middle of the glass gauge S, where it is maintained at a uniform level by the float within the feed-box G; the float being then buoyed up, closes, by means of the valve attached to it, the aperture of the feed-pipe F, immediately above the float, whereby all further supply of salt water is shut off until such time as by subsequent evaporation, or discharge of the brine in the evaporator, the level of the water in the evaporator H, and consequently in the feed-box G, will have been lowered, whereupon the float in G, sinking, will allow a fresh quantity of salt water to flow in until the proper level is restored. The feed-cock F should always be left wide open, except on an emergency; that is to say, except the valve or the float in the priming and feed box G should become damaged or out of order, in which case the supply of salt water to the apparatus would have to be regulated by hand with that cock.

The apparatus being charged with salt water, as just said, the boiler being ready to furnish the necessary steam, and admitting, of course, that the steam-pipe I is in communication with the said boiler, the next thing to be done is to open the steam-cock of that pipe, I, and at the same time shutting cock Z, and opening cock Z′, at the extremity of the refrigerator, and opening likewise entirely at first the cock T of the steam-trap U. On opening this small cock T of the steam-trap U, nothing but air will at first rush out, but as soon as steam issues from it, it should be *almost* closed, leaving only room for the *smallest possible* wreath of steam slowly to issue from it. As soon as the steam-cock of pipe I is open, the steam will rush through that pipe into the sheaf of pipes of the evaporator, in which it will be condensed by the salt water which surrounds them, and flow in the state of condensed non-aërated water through the pipe R, through the steam-trap U, through the continuation of pipe R, and out through cock Z′. If the apparatus has been left without working for some time, the condensed water issuing at cock Z′ will have a rusty colour, wherefore it should be left running until it flows out clear at Z′, in order not to foul the filter, which would be the case if that rusty water were allowed to flow into it. As soon, however, as the condensed water flows out in a clear state at Z′, shut off this cock Z′, and open cock Z, so that it may pass into the filter.

But the heat of the steam in the sheaf of pipes *j*, within the evaporator, soon brings the sea water round them to the boiling-point, and converts it into steam. As soon, therefore, as the sea water in the evaporator begins to boil, which may be known by a slight motion of the water in the water-gauge S, or by the pipes L and L′ of the feed and priming box G, and, of course, this box itself becoming hot, open the feed-cock of pipe F full (unless, of course, the float in the box G should be out of order, in which case the cock of the feed-pipe F must be regulated so as to supply water to the proper level in the condenser, which is indicated by the glass gauge S), shut the cock X of pipe Q at the top of the condenser, and open the cock X′ of that same pipe; whereupon the secondary steam from the evaporator passes through pipe L, through the priming box G, in which any salt water with which the said steam may be mixed is deposited and returned through pipe G′ to the evaporator whence it came, while the pure steam continues its course through pipe L′ into the sheaf of pipes *m* immersed in the salt water contained in the condenser D, and being condensed in the said pipes, flows out, in the state of aërated fresh water, through the cock X′, as long as it has a rusty colour, which will be only for about a minute. As soon as the water flows out clear and sweet from that cock X′, shut the latter and open cock X, so that the super-aërated fresh water may now mix with the non-aërated fresh water in pipe R′, and flow with it through the refrigerator, and thence into the filter, the whole issuing then from the filter in the state of *perfect* fresh water. If the apparatus be placed on deck, or on land—that is to say, above the natural level of the sea—it may be charged either by working the pump or by pouring water into the turned-up pipe E until the glass gauge indicates that the proper quantity of water has been introduced. The subsequent pumping must be regulated so that the condenser D remains hot down to E, and cold from E downwards. When the evaporator begins to give off steam, open also the brine-cock *i*, but only to such an extent as to permit a quantity of brine to be *constantly* flowing out, equal to about one-fourth part of the whole of the fresh water produced.

Attention to this is absolutely necessary, for if too much brine be allowed to run out, the apparatus will not produce its proper quantity of fresh water: for since every portion of brine which flows out is replaced by a corresponding quantity of new sea-water through the feed-cock F, feed-box G, and pipe G′, it is clear that the proportion of new sea-water thus admitted into the evaporator G by an extravagant outflow of brine might be so considerable as actually to stop all evaporation in the evaporator. On the other hand, if the brine-cock be not sufficiently open, the flow of brine being less than is proper, the sea water in the evaporator would eventually become so concentrated that a deposit or incrustation of salt would be formed. If, however, the operator take care to adjust the brine-cock so that the flow of the brine is at the rate indicated (about one-fourth of the whole fresh water produced), there will be no chance of stopping the evaporation, nor danger of incrustation.

When the operator wishes to discontinue the distillation, all he has to do is to turn off the steam from the boiler, and to shut both the brine-cock *i* and feed-cock F.

To Work the Apparatus.—1st. Open the steam-cock from the boiler to pipe I.

2nd. Open the cock Z′, and shut the cock Z of the refrigerator, and as soon as the condensed water flows clear and sweet from pipe Z′, shut the latter, and open Z, that the clear fresh water may flow into the filter.

3rd. As soon as steam begins to be given off by the evaporator, which is known by pipes L and L′ and the feed-box G becoming hot, open the feed-cock of pipe F and the cock X′, shutting at the same time X, and as soon as the fresh water flows clear and sweet at X′, shut the latter and open X, so that the clear fresh water may flow through the refrigerator and thence into the filter.

4th. Open the brine-cock *i*, so as to let the brine flow out in the proportion of about one-fourth part of the whole of the fresh water produced.

To Stop the Working of the Apparatus.—Shut off the steam-cock I. Shut off the brine-cock *i*. Shut off the feed-cock F.

Special Instructions.—Look occasionally at the water-gauge, in order to see that the proper level is kept up in the evaporator. If it be observed that the level is too low in the glass, the feed-cock being open all the time, it is a sign that too much steam has been turned in from the boiler, and therefore the steam-cock from the boiler to pipe I should be less open.

Look occasionally at the brine-cock *i*, to see that it is discharging the proper quantity of brine. It will be advisable also now and then to open the said brine-cock full for a few seconds, in order to discharge any rusty or muddy deposit which might otherwise stop it; and for this reason, once every month or so, it should be left quite open, in order to empty the evaporator completely, so that any rust or deposit may be expelled. Of course, when the brine-cock is full open for the purpose of emptying the evaporator, the feed-cock F should be kept closed.

The operator will perceive that a piece of vulcanized india-rubber *g* contains a metallic rod

inside, which metallic rod is connected with the float in the feed-box G. The use of this india-rubber tube is to enable him, by grasping the said rod through the india-rubber tube, to move the float up and down in the said feed-box, should he wish at any time to ascertain that it (and the valve attached to it) is acting properly. Should it become necessary to remove the float, it is easily done by unbolting the cover of the feed-box G, and the flanges of the feed-cock F, connected therewith. The apparatus may then be worked without the float by replacing the cover and regulating by hand the flow of sea water through the feed-pipe F.

The feed-cock F should be left full open when at work, since the supply of the sea water to the evaporator is perfectly regulated by the float ball and valve in the box G; it is only in case of emergency—that is to say, in case of the valve leaking or getting out of order from some accidental obstruction or otherwise—that the supply of water to the evaporator may be regulated by hand with the said cock until such time as will permit the operator to remove such obstruction, should any, peradventure take place. The feed-cock is therefore out there merely as an extra measure of precaution.

The small cock T of the steam-trap U should be left very slightly open, so that an exceedingly small wreath of steam may be seen issuing from it. This is for the purpose of letting out any air which might otherwise accumulate therein and interfere with the proper action of the float in the said steam-trap. It may also be open for a few seconds now and then—say two or three times a day—in order to see that it is clear.

If water should rush out in any quantity on opening the small cock T of the steam-trap U, it is a sign that the float is waterlogged or otherwise out of order; the remedy is to examine and repair it if wanted, or if possible, and if not, to remove it altogether, and regulate by means of the cock V of pipe R, so that as little steam as possible should pass through it, and so that only the water condensed in the evaporator may flow out. If, in case it has been found necessary to remove the float of the steam-trap, the condensed water should accumulate in the said steam-trap, which is known by opening the cock T in the cover thereof (in which case water instead of steam will rush out from the said cock T), it will be sufficient to open the cock V of pipe R for a few moments, whereupon the accumulated condensed water will pass into the refrigerator. In fact, the apparatus can work very well without the float in the priming box G, and without the float in the steam-trap U, either or both; but with them the apparatus works automatically, and without them the operator has to see that the feed-cock F is open only to the proper degree, or he must keep it shut altogether, and open it from time to time, so as to feed intermittently—say every half hour—to admit a new quantity of sea water into the evaporator. For emptying completely the condenser and refrigerator, unbolt the flange at either end of A. The evaporator may, of course, be completely emptied by opening the brine-cock s full.

Chaplin's Apparatus.—A distilling apparatus constructed by Alexander Chaplin, of Glasgow, for obtaining a supply of pure, fresh, aërated water from sea water, or from other water containing impurities, is shown in Fig. 2445. The apparatus, which is of simple construction, is almost self-acting, and is adapted for use either on shipboard or on shore. It consists of a boiler, from which a steam-pipe is led to a coil of pipes placed in a shallow wooden tank, which is kept filled with salt water, the boiler being fed from the tank by feed arrangement. The steam from the steam-pipe of the boiler is discharged into the condensing tubes in the form of a jet, an opening being left around the jet nozzle, through which air is drawn in by the action of the steam. This arrangement, by mixing the steam with air, is found to effectually aërate the distilled water. The distilled water in the condensing coils runs down, as it is formed, into a filter, and thence into a store tank below.

2445.

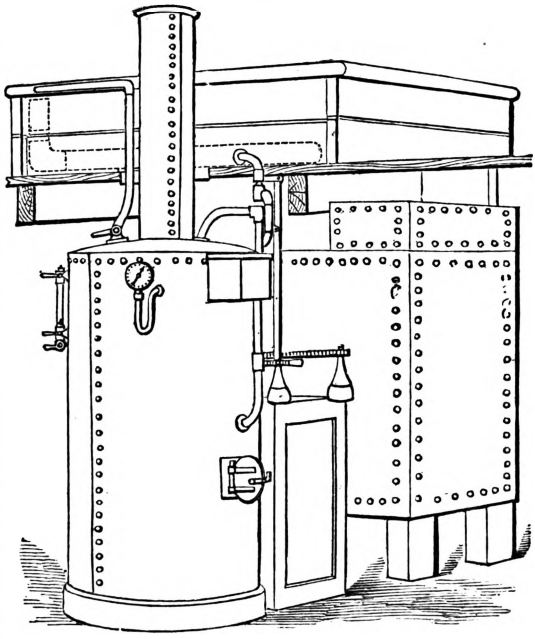

The feed apparatus, which is arranged on a well-known plan, consists merely of a chamber communicating at the top and bottom with the boiler, by means of pipes furnished with cocks, and also connected by another pipe, provided with a cock, with the tank containing the water employed for effecting condensation. In order to feed the boiler, the communications between the latter and the feed-chamber are closed, and the latter is then filled with water from the tank, this water being, of course, more or less heated by the steam in the coils of pipes. The communication between the tank and chamber is then closed, and the latter placed in communication with the boiler by opening the cocks on the connecting pipes, when the water in the chamber flows into the boiler by the action of gravity.

The method of working this apparatus is as follows;—The tank or condenser should be filled by the hand-pump with sea or other water, and the boiler should be also filled up to half-glass, the water supply being afterwards regulated by the feed apparatus. The fire in the boiler may then

be lighted. Coal, wood, peat, or mineral-oil fuel may be used, the latter being preferred when it is desired to make the apparatus as nearly as possible self-acting. In this case a special combustion cone is provided, the oil flowing over this cone, which must be first heated, so that the oil will ignite upon it. Combustion is then forced by the passage of air upwards through numerous small holes formed in the cone, and the flames are thus thrown against the sides of the fire-box. The steam being got up to, say 5-lb. pressure to the square inch, the main steam-pipe may be opened into the aërating pipe or cup, and thus a mixture of steam and air will be discharged into the condenser. The water in the tank becomes heated before it passes into the steam-boiler, and the whole of the sea water pumped up to the tank is gradually evaporated and converted into fresh aërated water fit for use, except a small portion lost by waste and in blowing off the boiler to prevent the incrustation of salt.

DIVIDING MACHINE. Fr., *Machine à diviser;* Ger., *Theilmaschine;* Ital., *Macchina da dividere;* Span., *Máquina de dividir.*

See Hand-Tools. Machine-Tools.

DIVING. Fr., *Plonger;* Ger. *Tauchen;* Ital., *Lavoro da marangoni;* Span., *Buceo.*

Before men are detailed for diving, they should be examined as to their fitness by a medical officer. If this be impracticable, it is useful to know that men coming under any of the following classifications should not be employed;—

1. Men with short necks, full blooded, and florid complexioned.
2. Men who suffer much from headache, are slightly deaf, or have recently had a running from the ear.
3. Men who have at any time spat or coughed up blood.
4. Men who have been subject to palpitation of the heart.
5. Men who are very pale, whose lips are more blue than red; who are subject to cold hands and feet; men who have what is commonly called a languid circulation.
6. Men who have bloodshot eyes and a high colour on the cheeks, caused by the interlacement of numerous small but distinct blood-vessels.
7. Men who are hard drinkers and who have suffered severely and repeatedly from venereal, or who have had rheumatism or sunstroke.

The *air-pump* employed until lately was a three-throw force-pump, but in 1868 a double-action two-cylinder pump was tried and found to answer well; its sole advantage over the other is that it can supply air to two divers working independently, at different levels, each diver being in direct connection with one of the cylinders. When work has to be carried on in water upwards of 90 ft. deep, only one diver should be supplied with air from the pumps. The pump, Fig. 2446, is securely fitted into a strong wooden case, Fig. 2447, and is worked by means of two winch-handles

2447.

2446.

2448.

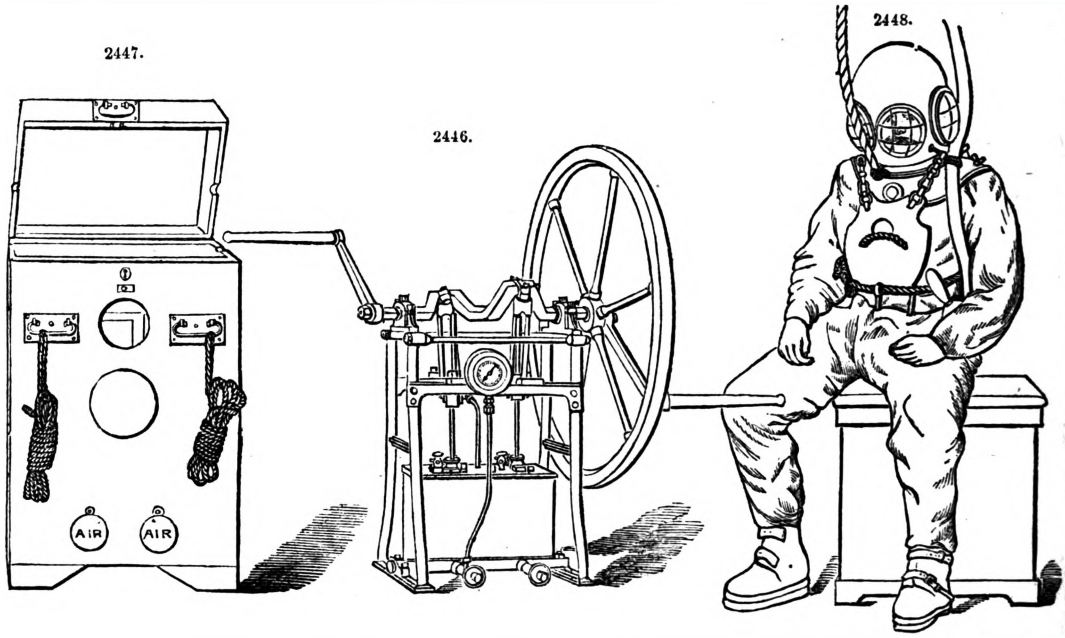

and a fly-wheel. These latter are taken off for transport, when the ends of the crank-axle are protected by *nipples* screwed on to the pump-case. Inside the pump-case is a box for small stores. The pumps are capable of compressing air up to 240 lbs. on the square inch, and are provided with a pressure-gauge, the dial-indicator of which shows the depth and the corresponding pressure; the cylinders are kept cool by water in a copper cistern round them. Before the pump is moved about after use, the water from the cistern should be drawn off by unscrewing the nut under the plate marked water. Olive oil must be used for the pistons, admitting it by means of the small cock in the cylinder cover. When putting the pump together, the different parts must be arranged according to their marks. The bottom valves can be examined by unscrewing the plate at the bottom of the case, and the top ones by unscrewing the cylinder cover, taking it off with the piston. If the

pump works heavily after lying by, warm water poured into the copper vessel round the cylinders will soften the oil round the pistons and make them work easily.

The *air-pipes* are in lengths of 45 ft., and are made either of india-rubber covered with canvas with a copper spiral wire inside, or else of vulcanized india-rubber with a galvanized iron spiral wire. As the former requires a long time to dry, the latter is probably the best for general purposes. The internal diameter of the pipes is $\frac{5}{8}$ of an inch, and they are fitted together by means of gun-metal union joints. If two men are to be supplied with air from one pump, the necessary length of air-pipe must be fitted to the nozzle of the air-delivery pipe of each cylinder. If only one man is to go down, the air-delivery pipes of the two cylinders must be connected by the *double connection*, and the air-pipe screwed on to its nozzle.

The *diving dress* is made of solid sheet india-rubber, covered on both sides with canvas; it has a double collar, the inner one to pull up round the neck, and the outer one of vulcanized india-rubber to go over the breast-plate and form a water-tight joint. The cuffs are also of vulcanized india-rubber, and fit tightly round the wrists, making, when secured by the wristbands, a water-tight joint, and at the same time leaving the diver's hands free.

The *wristbands* are of vulcanized india-rubber, with tape at their ends.

The *breast-plate* made of tinned copper has a valve V, Figs. 2450, 2451, in front, by which the diver can regulate the pressure of air inside his dress and helmet. When the handle of the valve-cock is vertical the valve is shut, when it is across the breast-plate the valve is open. The outer edge B of the breast-plate is of brass, and has twelve screws B, C, securely fitted to it at intervals, and projecting upwards, which pass through corresponding holes in the outer collar C of the dress, and upon which the four pieces of the *breast-plate band* are secured by thumb-screws. The neck of the breast-plate is fitted with a segmental screw bayonet joint. The breast-plate has two studs in front, to which the front and back weights are attached.

The *helmet*, Figs. 2449 to 2451, of tinned copper, has a segmental bayonet screw F, F, F, at the neck, corresponding to that of the breast-plate A, which enables the helmet to be removed from the

2449.

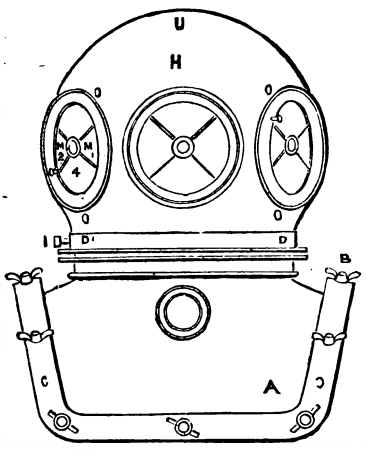

2450.

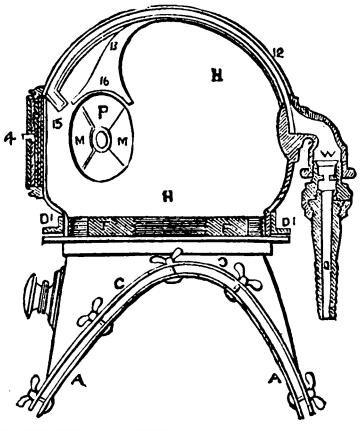

151.

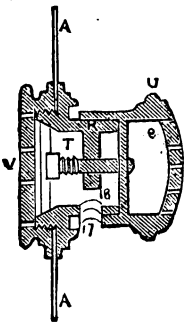

breast-plate by $\frac{1}{8}$ of a turn. It has three bull's-eyes of plate glass M, M, at the front and sides, protected by brass guards P; the front bull's-eye can be unscrewed. An outlet-valve is provided at the back of the helmet which is beyond the diver's control. An elbow-tube W is securely fitted on to the helmet, to which the air-pipe Q is attached; in this tube is a valve W opening inwards, so that the air can enter, but in case of a break in the air-pipe cannot escape. There is a brass stud on each side of the helmet, that on the left to attach the air-pipe to, and that on the right for the life-line, Fig. 2448.

The *front* and *back weights* are of lead, heart-shaped, and weigh about 40 lbs. each; they have gun-metal clips to fasten on to the studs on the breast-plate, and the back weight has a lashing attached to it, Fig. 2448.

The *boots* are of stout leather with leaden soles, and are secured over the instep by a couple of buckles and straps; each boot should weigh at least 15 lbs.

The *iron ladder* is provided with stays to bear against the side of the boat from which the diving is carried on, but a 6-ft. length of scaling ladder will answer the purpose. Rope ladders, wider than the ordinary miner's rope ladder, are provided; they have thimbles at each end, so as to be more readily attached to the bottom of the iron ladder and to the ladder-weights; the *ladder-weights* are merely 56-lb. weights, provided with movable handles of round iron, which are passed through the thimbles at the ends of the rope ladders and secured by linch-pins.

The *crinoline* should be used in deep water, and at any time at the diver's option; it is placed round the body and tied in front of the stomach, being supported by the braces; it affords protection to the stomach and enables him to breathe more freely.

The *cuff-expanders* are of galvanized iron, and are intended to enable the diver's hands to be got in and out of the cuffs; the scoop part of each should be placed inside the cuff, and the cuff opened by drawing the handles apart.

The ladder having been fixed, the position of the pump should be decided on, and it should be securely lashed by means of the ropes attached to the handles down to the stage into which the

screw-eyes M, M, Fig. 2450, should be fastened if necessary; the pump should be placed out of the way of the divers and clear of the men attending on them, and of all the men employed. The best position for the pump is facing the head of the ladder, and about 6 ft. from it, over the centre row of barrels, if the diving be carried on from a raft.

While the diver is dressing, the pump should be prepared for use, the winch-handles should be taken out of the pump-case, the nipples protecting the crank-axles removed, the nuts being replaced on their screws. The nuts for the ends of the crank-axles are taken off, the fly-wheel placed on the long arm, and the winch-handles put on and secured by the nuts which are screwed home with the spanner. The pump is always worked in its case.

The flap covering the pressure-gauge and that at the back of the pump-case should be opened, the screw on the overflow-nozzle of the cistern removed, and the cistern filled with water; the caps of the air-delivery pipes should be removed, the necessary lengths of air-pipe should be put together carefully with washers in place, and all the screws must be worked home by means of the *two* double-ended spanners. The air-pipes should be tested by holding the palm of the hand to the end of the pipe, till the pressure shown on the pressure-gauge is considerably above that corresponding to the depth the diver is to descend.

The diver having taken off his own clothes, puts on a guernsey, a pair of drawers very carefully adjusted outside the guernsey, and securely fastened by the tape round the waist to prevent them from slipping down, and then a pair of inside stockings. If the water be cold, the diver may put on two or more of each of the above articles. He then puts on the crinoline and woollen cap, drawing the latter well over his ears; some divers find relief from putting cotton saturated with oil in their ears.

The *shoulder pad* is then put on and tied under the diver's arms. He then gets into the diving dress, which in cold weather should be slightly warmed, drawing it well up to his waist; he next puts his arms into the sleeves, an assistant opening the cuffs by means of the cuff-expanders, or by inserting the first and second fingers of both hands, taking care to keep his fingers straight. The diver by pushing forces his hand through the cuff. He puts on a pair of outside stockings and a canvas overall to preserve the dress from injury.

The diver then sits down, and the inner collar of the dress is drawn well up and tied round the neck with a piece of spun yarn, and the breast-plate put on, great care being taken that the india-rubber of the outer collar is not torn in putting it over the projecting screws of the breast-plate. The four pieces of the breast-plate band, which with the thumb-screws had been previously placed for safety in one of the boots, are then put over the outer collar, and secured to the projecting screws by means of the thumb-screws; the centre screw of each plate should be tightened first. It will generally be sufficient if the thumb-screw be screwed up hand-tight, the spanner being only used when necessary. The canvas overall is now adjusted and the boots are put on.

The wristbands are passed tightly several times round the cuffs and their tape ends tied, and the sleeves of the overall are drawn down to cover them. If gloves are to be used, the wristbands will be put on over them as well as the cuffs. The helmet (without the front bull's-eye) is then put on; a loop of the life-line is placed round the diver's waist, the line brought up in front of the man's body, and secured with a piece of small rope passing round his neck, or to the stud on the helmet. The waist-belt is buckled on with the knife on the left side, the end of the air-pipe being passed from the front, through the ring on the belt on the man's left, and up to the inlet-valve on the helmet to which it is secured; the upper part of the pipe is then made fast by a lashing to the stud on the left of the helmet. The diver then steps on the ladder, and two men are told off to *man the pump.*

The weights are then put on, the back weight first, the clips being placed over the studs on the breast-plate, and the clip-lashings over the hooks on the helmet. The front weight is then put on, and the two are secured to the diver's body by means of the lashing from the back weight, which is passed round the waist, through the thimble beneath the front weight, and tied to the other end of the lashing at the back weight, Fig. 2448.

When the signalman is sure that all is right, and that the diver understands all the signals, he gives the word *Pump* and screws the centre bull's-eye into the helmet securely; this done, he takes hold of the life-line and pats the top of the helmet, which is the signal for the diver to descend.

With inexperienced men, it is advisable to have a rope ladder down to the bottom, but an expert diver prefers simply a rope; they both must be weighted at the bottom.

Each diver while under water requires a signalman to hold his life-line, and an assistant to hold his air-pipe, both of which should be kept just taut, clear of the gunwale, so that any movement of the diver may be felt. While the diver is under water no talking or laughing is to be permitted.

The diver should descend slowly, halting for a few minutes after his head is under water, to satisfy himself that everything is correct, and then continue the descent; if he feels oppressed or experiences any humming noise in his ear, he should rise a yard or two, and swallow his saliva several times; he must not continue to descend unless he feels comfortable. If oppression, singing in the ears, or headache continue, he must not persevere, but return slowly to the surface. To dive to great depths, such as 100 or 150 ft., requires men of great practice, and able to sustain the consequent enormous pressure.

On arriving at the bottom, the diver will give one pull on the life-line to notify that he is all right. In returning from great depths the diver should ascend very slowly, and thus avoid the effects of passing too abruptly from considerable pressure to that of the open air; if he stops now and then he gets gradually and regularly accustomed to the change. The ascent from a depth of 20 fathoms should occupy from 20 to 40 minutes. It is more important to move slowly in rising than in descending.

The diver takes down with him the ladder-line, which he secures to the foot of the ladder or rope by which he has descended; this line should be coiled up in his hand with a loop round his wrist, and as he leaves the ladder he lets the line gradually uncoil, so that if he be at any distance

off he can find his way back to the ladder when he wants to return. While at the bottom he should never let go the ladder-line; if by any accident he does so and cannot find the ladder, he must make the signal to be hauled up.

The diver should generally walk backwards; if he meets anything he must turn round and feel. this precaution is necessary, as by running against iron spikes, &c., the bull's-eyes may be broken; he must return to the ladder by the way he came, otherwise he may get his pipe or life line entangled.

When two divers are down they must be careful not to cross each other's paths, and thus get their life-lines and air-pipes foul.

The signalman is the responsible person, and must be very vigilant all the time the diver is down; occasionally he will give one pull on the life-line, and the diver should return the signal by one pull signifying all right; if the signal be not returned the diver must be hauled up, but if the diver wishes to work without being interrupted by signal, he gives one pull on the line, independently, for all right, let me alone. If the signalman feels any irregular jerks, such as might be occasioned by the diver falling into a hole, he should signal to know if he is all right, and if he does not receive any reply, he should haul him up immediately. If the diver from any cause is unable to ascend the ladder and wishes to be pulled up, he gives four sharp pulls on the life-line. If while being hauled up the diver gives one pull it signifies all right, don't haul me any more. The diver should be hauled up slowly and steadily. If the signalman wishes the diver to come to the surface, he gives four sharp pulls on the line, on which the diver should answer all right, return to the foot of the ladder, and signal to be hauled up.

One pull on the air-pipe signifies that the diver wants more air. *Two* pulls on the life-line and *two* pulls on the air-pipe in rapid succession, signify that the diver is foul and cannot release himself and requires the help of another diver; on receiving such a signal no attempt should be made to haul the diver to the surface.

The above signals are to be invariably used by the Royal Engineers; other signals may be arranged as is most convenient for any particular work, as a great variety can be made with the life-line and air-pipe. The diver can communicate with the surface by means of a slate.

When the diver comes up, the front bull's-eye should be removed immediately he gets to the surface; if he is going down again within a quarter of an hour, he can have the wristbands removed, the weight taken off his body, by leaning forward, and resting the front weight on the gunwale; if he is to cease work the front and back weights must be removed before he leaves the ladder; it is advisable to detach the air-pipe from the helmet next. The diver must then be assisted into the boat, the attendants lifting his legs in one after the other. He can then sit down and have the helmet removed, also the waist-belt, life-line, and boots; next the overall and the outside stockings. The breast-plate band should then be removed, the thumb-screws at the junctions of the breast-plate bands being unscrewed first. The bands being removed, the outer collar should be taken off with care so as not to tear it in getting it over the screws. The breast-plate is then removed, the dress pulled down, the cuff-expanders or fingers being used to enable the diver to withdraw his hands from the cuffs. The shoulder pad and crinoline and other clothes can then be taken off.

After the day's work is over the joints of the air-pipes must be carefully cleaned, and the pipes coiled away in the helmet-chest. The diving dress should be cleaned, and if wet inside turned inside out and hung up in the shade to dry; the dresses if used in salt water should be washed at least once a week in clean fresh water. The under-clothing must be kept dry and aired.

When in store, the pump, &c., must be kept clean and free from verdigris, the clothing occasionally aired, the tools oiled, &c. When wanted for use after lying by for some time, the pump should be taken to pieces by a good fitter, and examined to see that it is in proper working order. The helmet-valves should be unscrewed and examined to see that the valve is free from verdigris, but slightly greased with tallow to prevent leakage; the spring should be good, of greater or less strength according to the depth of water. All the screws of the helmet, breast-plate, air-pipes, &c., must be kept free from verdigris and clean, but wiped with an oily rag. When a piston works loose, the screw at the top must be turned a little with a spanner.

The number of men required for a diving party is,—

	With two divers down.	With one diver down.
In charge	1	1
For life-lines	2	1
For air-pipes	2	1
For pumps	2	2
Divers	2	1
	1 non-commissioned officer and 8	1 and 5

The above is exclusive of men to haul up, &c., according to the nature of the work being carried on.

For instruction, a class may consist of from five to ten men.

If the diving is simply for the recovery of a lost article, the raft should be moored up stream about 10 or 15 ft. from the supposed place of the article; a weight with a ladder-line attached should be sunk about 10 or 15 ft. down stream from the place; the diver should take the other end of this ladder-line down with him, and when at the bottom haul it taut and fasten it to his ladder. He then uses the ladder-line as a guide, and searches the ground on both sides of it; if unsuccessful he shifts the position of the weight, keeping the ladder-line taut all the time, and so continues.

An equipment consists of the following packages: taken from T. L. Gallwey's Instructions in Military Engineering:—

Description of Articles.	Weight of each.				Total Weight.			
	cwt.	qrs.	lbs.	oz.	cwt.	qrs.	lbs.	oz.
1 pump, in case, complete	2	3	17	0	2	3	17	0
1 fly-wheel	0	3	24	14¾	0	3	24	14¾
1 box, for oil, &c.	0	3	9	0	0	3	9	0
1 iron ladder	0	2	20	0	0	2	20	0
5 rope ladders	0	1	8	0	1	2	12	0
2 hand-over-hand ropes	0	0	21	0	0	1	14	0
2 coils 1-in. and 2-in. rope, spare ..	0	3	3	0	1	2	6	0
2 ladder-weights	0	2	0	0	1	0	0	0
2 clothes-chests, complete	1	3	26	6½	3	3	24	13
2 helmet-chests, complete	1	2	23	15½	3	1	19	14½
Total	10	3	13	4½	17	1	1	10¼

The contents of the several chests are given below;—

Names of Stores.	No.
Case, pump, with lock and key	1
Containing—	
Gauge, pressure, fixed to pump-case ..	1
Lashings, spliced to handles, each 8 ft. ..	4
Pump, air, diving, fixed to pump-case ..	1
Cramp, screw, for fly-wheel	1
Handles, winch, for pump	2
Nipples, crank, fixed to case for transport	2
Spanner, box, for nuts in pump-case ..	1
Can, oil, feeding	1
Box, wood, for small stores, fitted into pump-case	1
Containing—	
Cap, brass, for air-delivery pipe (spare)	1
Connection, double, for use with a single diver	1
Gimlet, spike, ⅜-in.	1
Joints, union, double, 1 male and 1 female	2
„ „ single, „ „	4
Nozzle, overflow (gun-metal)	1
Nut for securing pump-handles (spare)	1
Screw-drivers, 1 6-in. and 1 2½-in. ..	2
Screw-eyes, for securing pump-case to stage	4
Spanners, double-ended	3
„ M'Mahon's, 9-in.	1
Washer-cutter, for washers of air-pipes	1
Box, tin, for valves, &c.	1
Containing—	
Valve, piston (spare)	1
Valves, bottom, spring (spare)	2
Washers, leather, for joints of air-pipes (spare)	24
Wheel, fly, for pump	1
Box, oil, with lock and key	1
Containing—	
Cotton, waste .. .. lbs.	6
Oil, olive, best, for pumps, in tin can, gals.	3
Oil, neats-foot, for leather „ „	3
Ladder, iron	1
„ rope, diving 20-ft. .. .. pieces	5
Weights, ladder, 56-lb.	2
Chest, clothes, with lock and key	1
Containing—	
Belt, waist, for knife	1
Boots, diving, with leaden soles .. pair	1

Names of Stores.	No.
Drawers, woollen .. .. pairs	4
Dresses, waterproof diving	2
Expanders, cuff	2
Gloves, waterproof .. .. pair	1
Guernseys	4
Instructions, printed	3
Knives, diving	2
Line, ladder, 1-in. rope .. .. 60 ft.	1
Lines, life, 2-in rope .. .. .. „	3
Overall, canvas	1
Sheath for spare knife	1
Stockings, outside, grey .. .. pairs	2
Weight, lead, front	1
„ „ back, with lashing attached	1
Wristbands, 4 on dresses and 4 spare pairs	8
Materials—	
Canvas, prepared, for repairing diving dresses .. .. yards	3
Composition for dresses .. in lb. tins	2
Chest, helmet, padded at the bottom, with lock and key	1
Containing—	
Bull's-eye, front, frame and glass complete (spare)	1
Caps, woollen	2
Crinoline	1
Glasses for bull's-eye, front (spare)	2
„ „ oval (spare)	2
Helmet and breast-plate complete, with breast-plate band (in 4 pieces), 12 thumb-screws, and front bull's-eye ..	1
Pads for helmet	2
Pipes, air, spiral wire, with union joints, in lengths of 45 ft.	3
Stockings, inside, white .. .. pairs	4
Box, tin, for helmet stores	1
Containing—	
Screws, for breast-plate	6
Spanner „ screws	1
„ nuts of oval eye-glass ..	1
Springs, inlet, small, for helmet (spare)	2
„ outlet, large „ „	3
Thumb-screws for breast-plate „	12
Washer, leather, for bull's-eye „	1
„ „ neck ring „	1

See J. W. Heinke, On Diving Dresses and Apparatus for Working under Water, Trans. Inst. C. E., 1856.

About the year 1825, C. A. Deane took out a patent for an apparatus to recover property from houses on fire. As this did not meet with support from the fire-insurance offices, C. A. Deane turned his attention to diving; and, in conjunction with his brother, J. Deane, tried some experiments on the Croydon Canal, with a canvas helmet and an ordinary pair of forge-bellows. These experiments proved so far successful as to satisfy them that diving was practicable, with proper

means to supply the diver with air. Accordingly they had an air-pump and helmet constructed, but as they did not fully answer the purpose, Messrs. Deane applied to A. Siebe, who, in 1830, made others, which proved satisfactory. The helmet was what was termed an open one. The air entered by an elbow at the back, and was conducted, by means of the tube *a*, Fig. 2452, to the diver's face, so that he at once inhaled the fresh air, and at the same time the breath was prevented from condensing on the glasses. The foul air escaped from underneath the jacket attached to the helmet, on the same principle as the air escaped from a diving bell.

With this apparatus, Messrs. Deane undertook and executed several important diving operations. Amongst other experiments that were tried was the introduction, in 1832, of a valve in the front of the collar of the helmet, by which the diver could regulate the exit of the foul air at pleasure. When the valve was closed the air was retained, the dress expanded, and the diver rose to the surface. After several careful trials, Messrs. Deane came, however, to the conclusion that the diver was safer with the air-pipe and signal-line in the care of an attendant, who could haul him up at a moment's notice; since, with the valve above alluded to, the diver was liable to get hurt by rising up under the vessel or boat, or by becoming entangled with the rigging of the wreck, or portions of the works upon which the operations were conducted. For these reasons the use of the valve was discontinued.

2452.

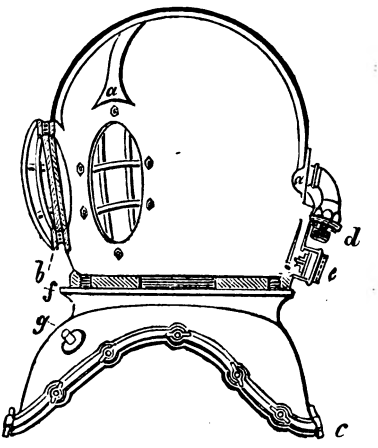

As diving came into more general use, several accidents happened through inexperienced divers not keeping themselves in a proper position when using the open helmet. In consequence of this, A. Siebe, in 1837, introduced the close helmet, and at the same time G. Edwards proposed one nearly similar. Although personally acquainted with each other, it was not until both had perfected the idea that they found they had been working to attain the same object. It must not be forgotten that divers owe much to the skill and ingenuity of Samson Barnett.

The close helmet, as represented in Fig. 2452, consisted of a front glass *b*, which could be unscrewed to enable the diver to take refreshment, or to give orders, without removing any other portion of the dress. The dress was fastened to the helmet by means of the flanges *c*, pressed together by screws and *wing-nuts*. The air entered at the back, as in an open helmet. There was an entrance-valve *d* screwed on the elbow; this allowed the air to enter the helmet, but prevented its return. If the pipe should burst the diver had plenty of time to come to the surface. The outlet-valve *e* allowed the foul air to escape, and prevented the entrance of the water. The valve-spindle was immediately closed on the least stoppage of the supply of air by means of a spiral spring, as well as by the pressure of the water. The valve being slightly loaded prevented the pressure of the water acting on the body of the diver, in consequence of the internal pressure being greater than the external.

DIVING BELL. Fr., *Cloche de plongeur*; Ger., *Taucherglocke*; Ital., *Campana da marangoni*; Span., *Campana de buzo*.

W. Forsyth, in the T. I. C. E., Ireland, says that the best contrivance of this kind is the bell generally attributed to Smeaton, and improved by Rennie. Various modifications have been introduced by others, and different sizes have been tried, some larger, and some smaller than Rennie's; but, for the general purposes of hydraulic architecture, this bell has maintained its superiority, and is in general use while the others are abandoned. It is, however, not without its defects: and these defects are severely felt by those engaged in particular branches of these operations. The most prominent are the following;—Its great weight, and the being compelled to use one uniform weight for all depths and purposes coming within the range of its operations.

In constructing the submarine foundations of piers, and so on, at a great depth, this weight is absolutely necessary; it has even been found that the mechanical contrivances used for managing the bell have but little command over it, from its buoyancy at such depths. The great weight being in the substance of the bell itself, gives it greater compactness than if the weights were foreign to its own substance, and merely attached to give it preponderance.

It has also been found that building under water to seaward, even at small depths, weight, strength, and compactness are highly necessary, as the agitation of the sea drives the bell about with dangerous force, notwithstanding its weight; and the shocks it has to sustain, when driven against stones, might displace attached weights, and destroy a weaker machine.

These are facts which have been proved by experience, and they are of importance to those concerned in hydraulic operations of this kind. But in sheltered harbours, lakes, and rivers, where the depth is often small, and the water still, the bell is not exposed to a force that would displace it, derange any of its attachments, or endanger its structure. And there are many operations, such as blasting rocks, making excavations, lifting stones, and so on, where it would be of great advantage to possess a light machine, which could be easily transported from place to place, and even taken asunder to facilitate its transport, and which would require little time or skill to rig it up; and besides dispensing with much of the gigantic machinery by which diving bells are now worked, to be able to regulate the preponderating weight according to the depth at which the operations are being carried on.

Bells constructed of timber have been used, even for building purposes, with considerable success; and for lifting guns, anchors, merchandise, and so on, from wrecks or places where they have been lost overboard, a bell constructed of timber, and jointed with canvas, so as to fold up, has been used. There is nothing to prevent such machines being used, as the pressure which they

have to resist is seldom more than 3 or 4 lbs. the square inch; but they are so fragile that their use could only be temporary at best.

The extensive application of sheet iron, especially to hydraulic purposes, at once points it out as the most durable and economical material that can be employed, and as possessing all the properties necessary for constructing a light portable bell, capable of being loaded to an extent to suit any depth of water.

The size of the diving bell for general purposes ought to be the same as Rennie's bell; the size of this bell is 6 ft. 4 in. long, 3 ft. 10 in. wide, and 5 ft. 4 in. high, internal dimensions. To add to its dimensions in any way would be to add to the weight necessary to sink it; and although this weight would be neutralized by the included atmospheric air when immersed, yet the whole weight would have to be borne when the bell was lifted out of the water, or else the weights removed when it came over water; either of these would be attended with cost and inconvenience. Jumpers of any length can be used in Rennie's bell. It is only necessary to have them in suites, increasing in length in a certain ratio, so that they can follow each other. If the hole to be bored be a vertical one, when it is put down so far as to make it necessary to introduce a longer jumper than can be turned within the bell when set on the bottom, then all that has to be done is to have the bell hove up to a sufficient height to allow the jumper to be introduced, and lowered down again. If the hole be horizontal or inclined—what is technically called a lifting shot—then, instead of the bell being raised, it has to be moved to one side, the long jumper introduced, and the bell then returned to the former position. There are many of these little contrivances known to the workmen practised in this kind of work, which enable them to surmount many seeming difficulties.

For blasting rock in depths under 10 ft., much time and expense would be saved by the following plan. Let the workmen in the diving bell select a proper place for the proposed shot, and enter a hole, say 12 in., then jumpers of sufficient length could be introduced to enable the hole to be completed to any required depth from a flat—similar to the boring flats used on the Shannon—or from a raft or scaffold. When the hole is completed to the required depth, the charge can be put in and stemmed by the workman in the diving bell; and as it is seldom that less than 3 yds. of fuze are used for the safety of the workmen, the end can be brought to the top of the water and fired.

If this plan be followed, about one-half of the usual cost of boring under water would be saved, as the divers would have little more than a fourth of the work to do. The numerous attendants on the bell, and the necessary slowness, in comparison to working on a lighter or raft, will warrant these statements. If the rock be of such a kind that horizontal or inclined holes are necessary, this plan cannot be followed, but a hole inclined 50 or 60 degrees may be bored in this way.

To make the internal economy of the diving bell intelligible, a section of Rennie's bell is given, Fig. 2453.

2453.

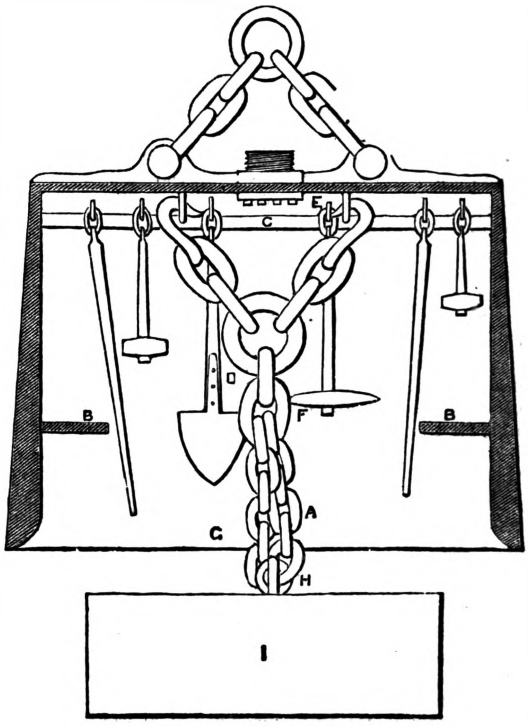

A, is a foot-board which is movable, and seldom used, except when descending and ascending. B B, two seat-boards; these are also movable, being inserted between raised flaunch brackets, cast on the side of the bell. C, a timber rail, wedged between the ends of the bell, and placed in the angle which the top and sides make; there is one on each side. Malleable iron hooks are driven into these rails, from which the tools are suspended, namely;—two setting bars, a shovel, one or two boring hammers, a 3-ft. rod, several chains, and the signal hammer. These are the tools always necessary, excepting the shovel. For occasional work, such as boring, there are jumpers and tampers of various sizes; but these, and heavy chains and hammers, are left lying at the bottom when not being used or undergoing repair. D, are the inside coupled chains; these are also made so as to be detached with ease. E, the air-valve attached to a brass grating of the form shown, Fig. 2454, which is secured to the top of the bell by screw taps. The valve is simply a disc of strong leather, held in its place by the screw taps which fix the brass grating to the top of the bell. F, the coupling chain, by which stones and other weights are lifted. G, the line at which the water usually stands on the inside of the bell, when the air-hose is in good order. H, the *lewis*. I, stone suspended by the lewis and chains. The

2454.

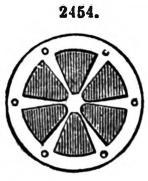

use of the greater part of these is obvious. The use of the internal coupled chains will also be understood by the manner in which the stone is represented, as suspended, in the sketch.

If we suppose, for illustration, a stone to be lowered down; the bell is then brought over it, and made to rest slightly on the stone to steady it. The chains by which the stone was lowered down are then detached; the lewis having been inserted into the stone before it was lowered, is attached to the inside coupled chains in the following manner;—the chain F, which forms an indispensable item in the furniture of the bell, has a hook at each end, one much stronger than the other; the strong hook lays hold of the ring which couples the two inside chains D. The other end of the coupling chain is run through the ring of the lewis, and either hooked into the ring beside the large hook, or, what is more common, four large links are made on the end of the coupling chain F next the large hook, and into one of these the small hook is hooked, suiting the length to the proper distance between the bottom of the bell and the stone when suspended. When this is done, the bell is then hove up, and as the stone is attached to the bell by the chains F and D, the stone is also hove up, and, when high enough, carried away in obedience to the signals.

When the bell is prepared for boring, every implement that can be dispensed with is removed to make room. One or both of the seat-boards are taken out to make seats on the rock, or scaffolds to stand on. If the hole be a horizontal or inclined one, it is necessary that the bell be so far raised as to allow the jumper to be put out under the end of the bell; then the foot-board and seat-boards are made into a scaffold by suspending them from the hooks in the timber rail, by lanyards or gaskets. When the hole is bored, the bag or cartridge is introduced, and tamped in the ordinary way, only clay will not answer, it becomes too soft with the water—soft burnt brick must be used. About 3 yds. of fuze being left attached to the bag, the seat-boards and foot-boards are replaced, the end of the fuze is kept in the bell, which is now removed as far as the length of the fuze will permit. The fire is then applied, and the bell removed farther—about 5 or 6 yds. in all—from the shot. This is quite far enough for safety, as no fragments will be able to force their way through the water to do any injury.

Forsyth designed a sheet-iron diving bell, represented Figs. 2455 to 2457. It is made the same as Rennie's bell in size, although a smaller bell might be occasionally used with great advantage. The plates are $\frac{3}{8}$ or $\frac{7}{16}$ of an inch thick, 6 ft. 6 in. long by about 2 ft. 3 in. broad. These plates should be placed in the manner shown on the drawings —that is, the seams or joints of the sides and ends to be vertical, and the lower ends of the plates turned up so as to form a receptacle for the ballast weight. As the length turned up will not give sufficient depth to this receptacle—or what may be called pocket—Forsyth proposed that a plate be joined horizontally, or its length parallel to the bottom of the bell, and continued quite round, forming a continuous band to give strength to the pockets at the corners, where the plates are necessarily

2455.

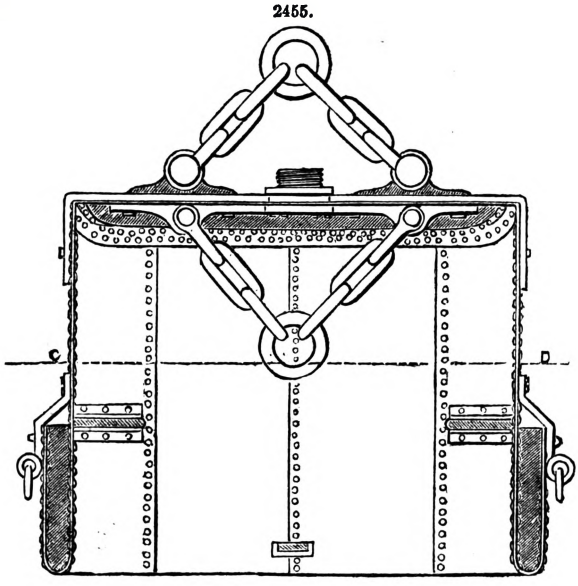

2457.

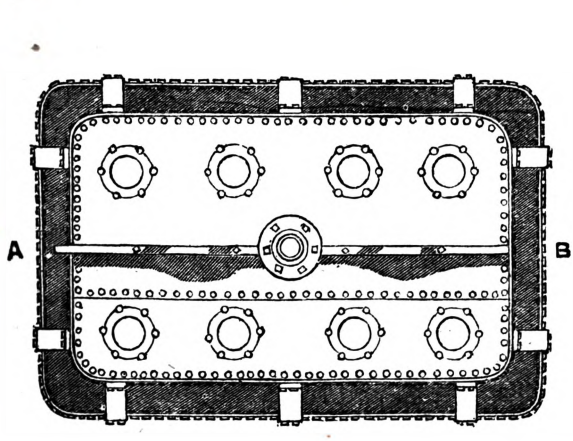

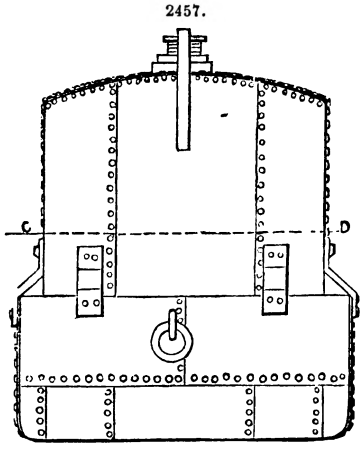

cut to allow them to be turned up at the bottom. Forsyth designed the pockets to be 20 in. or more deep. If 5 ft. 4 in., the height of the bell, be taken from 6½ ft., and 7 in. for the semi-cylindrical bottom of the pocket from the difference, there will remain only 7 in. of the side and end

plates to be turned upwards for the outside of the pockets. It will therefore require a plate 16 in. or more broad, allowing for the seam, to make the pocket of the proposed depth, not taking the semi-cylindrical bottom into account. Instead of piecing each turned-up plate with 16 in. in length, Forsyth took four plates, about 6 ft. long each, and 16 in. broad, which, when joined together by riveted seams, will make a continuous band entirely round; and this band is joined to the turned-up ends of the vertical plates by a riveted seam.

To this continuous horizontal plate are attached knee-plate stays, 4 in. broad and ½ in. thick. These stays are riveted to the sides and ends of the bell, three on each side and two on each end. The top of the bell is attached to the sides and ends by angle-iron, such as is used in the construction of steam-boilers. The corners of the bell form a portion of a cylinder—6 in. radius—to facilitate the bending of the plates, and avoid straining them; this will also assist the bending of the angle-iron round the corners and ends of the bell. The cylindrical corners of the bell make it necessary that about 12 in. in breadth be cut out of the middle of the plate, from the line which terminates the vertical part of the plate forming the body of the bell to the end of the plate. When the portions of the plate remaining after this piece is cut out, are bent upwards, the ope must be covered with a piece of plate forged to the proper figure. The cutting and forging of the corners of the pockets will leave them weaker, and therefore it is desirable to have the continuous band to strengthen them.

The top of the bell is formed of two pieces of plate of unequal breadth, to avoid having the riveted seam in any of the perforations. A bar of iron is placed on the top and extending its whole length, except where the air-hose is attached to the top of the bell, and turning down on each end. The general dimensions of this bar are 2 in. square, and thinned towards the inverted ends; and having two pedestal-formed parts, as shown, to receive the shackle-bolts of the coupled chains by which the bell is suspended. These shackles, bolts, chains, and ring, to be the same as those of the bell now in ordinary use. A similar bar is on the inside of the bell-top, but shorter, not having its ends inverted. These bars are to be attached to each other and to the bell-top by four rivets of 1¼ in. round iron riveted hot; and the two inverted ends of the top bar to be secured to the ends of the bell by one rivet each. To the inside bars the coupled chains for lifting weights are attached by shackles and bolts. The screw-joint for receiving the end of the air-hose, and the valve on the inside of the bell, to be of the same materials and construction as the bell already referred to. The perforations for the lights to be 5 in. in diameter, the lenses 7 in. in diameter, and 2 in. thick in the middle. The lenses to be secured with glands, hemp, and luting of red or white lead, and fastened to the top of the bell with screw-taps. The number of lights to be eight, the usual number is ten. The position of the two deficient ones is occupied by the bar above described. This bar was considered necessary to prevent straining the angle-iron, by which the top of the bell is attached to its sides and ends; and perhaps it may be advisable to have two other bars placed at right angles to this one, proceeding from the pedestal parts, and turning down the sides of the bell and riveted in the manner before described. These bars are not shown on the figures.

The air-pump and air hose or pipe to be the same as those in general use.

The ballast to be of cast iron, moulded of such shapes as will fit the pockets, and provided with handles sunk below the surface.

On an emergency, or where it might not be convenient or advisable to transport the ballast, malleable iron bars of suitable lengths, and any scantling, may be used, so that they stow into the pockets and fill them.

If the weight of the bell, about 32 cwt., be found too great for transport, it may be made in two divisions—see line *c*, *d*, on Figs. 2455, 2457—and joined together by a series of screw-bolts instead of rivets, and having a band of hemp or canvas luted with red-lead interposed between the parts to make the joint air-tight. It is, however, evident that this ought to be avoided if possible.

DOCK. Fr., *Bassin de construction*; Ger., *Werftdocke*; Ital., *Bacino*; Span., *Dique*.

A *dock* is an artificial enclosure in connection with a harbour or river, used for the reception of vessels, and provided with gates for keeping in or shutting out the tide.

A *dry dock* is a dock from which the water may be shut or pumped, so as to leave a ship dry for inspection or repairs; called also a *graving dock*.

Floating dock, a structure, either water-tight or provided with water-tight tanks, for receiving vessels and raising them out of water by its buoyancy, when the water is pumped out of it, or out of the tanks, or the tanks are lowered by machinery; called also *sectional dock*.

Naval dock, a dock connected with which are naval stores, materials, and all conveniences for the construction and repairs of ships.

Screw dock, a dock in which a frame for the reception of vessels is raised or lowered by screws and other machinery.

Wet dock, a dock where the water is shut in, and kept at a given level, to facilitate the loading and unloading of ships; a basin.

The Victoria Docks are situated near Blackwall, London, and occupy an area, inclusive of the entrance lock and eastern channel, of nearly 100 acres of water, or of 200 acres of land and water. Fig. 2458 gives the position and shows the plan of these docks. The water area comprises the entrance lock from the Thames, with two pairs of gates, leading by a channel into the tidal basin of 16 acres, which is separated from the main dock of 74 acres by a dumb jetty, but communicating with it by a single pair of gates, and terminating, at present, with a cut or channel at the eastern extremity. In general terms the basin and dock together (exclusive of the eastern cut) are 4050 ft. in length and 1050 ft. in width at the level of high-water mark. In addition to the dumb or separating jetty, there are four other jetties projecting into the dock from the north side, each 581 ft. long and 140 ft. wide, which are placed 430 ft. apart, except the most easterly one, which has an interspace of 550 ft. The jetties, with the sides of the dock and of the basin, provide a length available for quay room of nearly 3 miles. The surface of the marsh, which is nearly

level, is about 8 ft. 6 in. below Trinity high-water mark, and, previous to the construction of the docks, it was drained by open ditches carried by means of culverts with trapped outlets through the ancient river bank into the Thames. This bank, which protects the lands from the tidal water of the river, is maintained at a height of 5 ft. above Trinity high water, and this is the level adopted for the top of the copings of the entrance and entrance-lock walls.

2458.

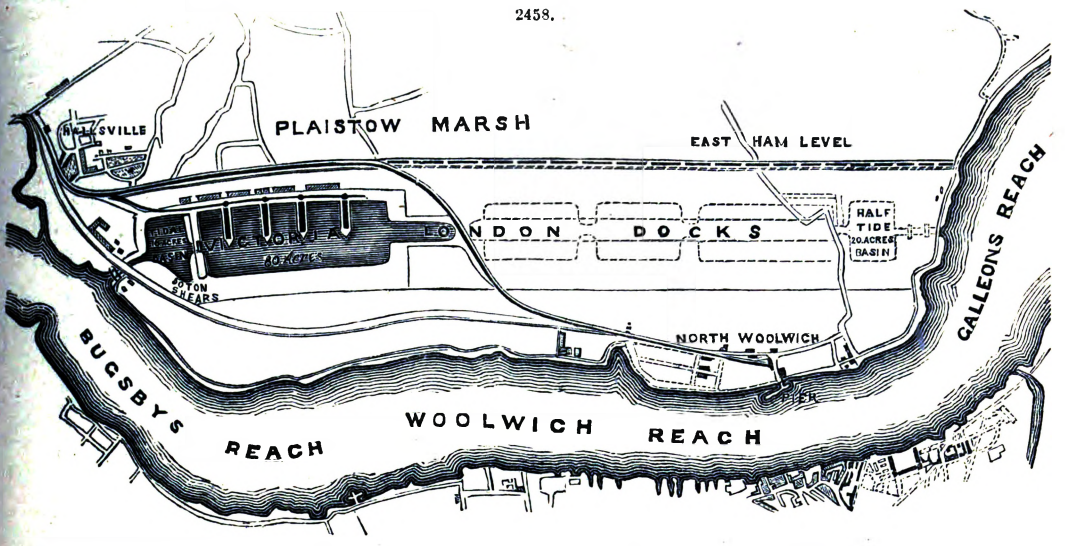

It may be well, while speaking of the Trinity high-water mark (a convenient datum to which to refer depths), to state that the bottom of each of the two docks is 24 ft. below this standard, the depth of the channel leading to the lock from the basin is 25 ft. 8 in., on the sill of the upper gates 25 ft. 6 in., and in the lock itself and on the lower-gate sill 28 ft., a depth which is maintained through the entrance into the river. As the mean fall of tide is 18 ft., there is, therefore, on the lower-gate sill a depth of 10 ft., and on the upper-gate sill a depth of 7 ft. 6 in., at Trinity low-water mark.

The subsoil, beneath a layer of about 12 in. of topsoil, may be briefly described to consist of various thicknesses of yellow and blue clays, averaging together 5 or 6 ft. in depth, then a stratum of peat, of no economical value, varying from 5 ft. to 12 ft. in thickness, and beneath this a bed of gravel, overlying the London clay. At the entrance, the upper clay-beds were from 8 to 9 ft. thick, the peat about the same, and the gravel 10 ft. thick near the lower-gate platform; but in the middle of the lock-chamber the gravel diminished in thickness to 7 ft., increasing again to 8 ft. at the upper-gate platform. Hence the solid clay substratum was found, throughout the length of the lock, at a nearly uniform depth of 37 ft. below Trinity high-water mark, and on this foundation, at a depth of 37 ft. 6 in., the brickwork of the upper and lower gate platforms was laid.

Entrance and Entrance Lock.—Proceeding somewhat more in detail, it will be seen from the plan, Figs. 2458, 2459, that the channel, which on leaving the tidal basin is 156 ft. wide, contracts as it approaches the lock at the swing bridge, after passing which the side walls, throughout the lock and entrance, are constructed of cast-iron piling and plates, backed with concrete, but interrupted in two places, for the brickwork of the gates. The piling has a batter of 2 in. in a foot, and where it commences the width between the copings is 91 ft., which continues for a length of rather more than 100 ft. The brickwork of the upper-gate platform then begins, and occupies a length of 83 ft. 3 in., the side walls being here vertical and 80 ft. apart; then the lock-chamber, Fig. 2460, with concrete walls and cast-iron piles, as before, for a length of 256 ft. 10 in.; then the lower-gate platform 73 ft. 3 in. in length, giving a lock-chamber 80 ft. wide at the bottom, 326 ft. 6 in. long from gate to gate, Fig. 2465, and with a depth of water of 10 ft. on the sill at low water. Beyond this point the piled and concrete side walls recommence, running parallel for a length of 85 ft., and then widening out, for a farther distance of nearly 200 ft., in a trapezoidal form, the base, or greatest opening, being 385 ft., and the unequally-inclined sides being respectively 297 ft. and 160 ft. in length, the longer one being that next to the Bow Creek.

The cast-iron piling and concrete wall are very similar to those already successfully employed in the construction of the Brunswick Wharf, Blackwall, and at Fleetwood Harbour. The cast-iron piling is formed in bays, which are 7 ft. 1 in. from centre to centre of the main piles, the intervening space being filled, for a distance of 15 ft. from the top, by three cast-iron plates, retained laterally by the edges of the main piles which stand in front of them, the lower part beneath the plates being made up with four cast-iron sheet-piles, on the top of which the bottom plate rests, its lower edge being furnished with a rebate or fillet which hides the joints and maintains the piles in their position. The main piles are each in two lengths; the lower one, which is 25 ft. long and 18 in. wide on the face, is provided with two vertical flanges, or feathers behind, 8 in. deep and 12 in. apart, the metal being about 2 in. thick; and the upper one, which is 12 ft. 8 in. long and 18 in. wide, has a section similar in form, but somewhat lighter in substance: it is placed on the former, and is secured by bolts passing through it and fish-pieces cast on the upper length for the purpose, proper chipping pieces being provided to ensure accurate fitting. The sheet-piles, which

are each in one length of 20 ft., are of somewhat similar form; but it will be unnecessary to go into a more minute description of them, as the particulars are fully given in Figs. 2466 to 2468. The three top plates are each 5 ft. 11 in. wide and 5 ft. deep. They are furnished with the necessary back feathers to give them strength, the upper one being so arranged as to carry the front edge of the stone coping of the wharf, which is 18 in. in thickness. In the rear of each main pile, and at a distance of 18 ft. from it, a timber land-tie 20 ft. long is driven to the same depth as the cast-iron piling. Through the head of this two wrought-iron tie-rods, 2 in. in diameter, are passed, and secured by means of washer-plates and nuts; the lower one is connected with the upper end of the lower length of the main pile by means of an eye-bolt, and the upper one is attached to the upper main pile, at a distance of 8 ft. above the former, and in a similar manner.

In the part between the lock and tidal basin, the channel was excavated to a depth of 27 ft. 8 in. below Trinity high-water mark, to receive a thickness of 2 ft. of clay puddle. The main piles were driven 5 ft. into the gravel, the sheet-piles entering 2 ft. 6 in. into it. The concrete wall was carried to the bottom of the clay puddle; and the whole space at the back, between the concrete wall and the land-ties, was filled in with gravel well rammed. In the lock-chamber, the gravel in the bottom was taken out, down to the clay, except a portion on each side, into which the piles were driven, and on which concrete was laid in front, forming a toe to the wall, and sloping down towards the centre, Fig. 2463, and the whole intervening space was filled with clay puddle to the proper level.

Beyond the lower-gate platform the concrete walls were carried, for the full thickness, to the back of the land-tie piles, and on a level with the top of them, or about 15 ft. below Trinity high-water mark. The walls were then reduced in thickness to about 10 ft., and were carried up vertically at the back, giving, in consequence of the batter of the front piles, a thickness of 6 ft. at the top, as in the other cases. The wharf wall is finished off at the top in the front by a stone coping 18 in. thick and 3 ft. on the bed.

2459.

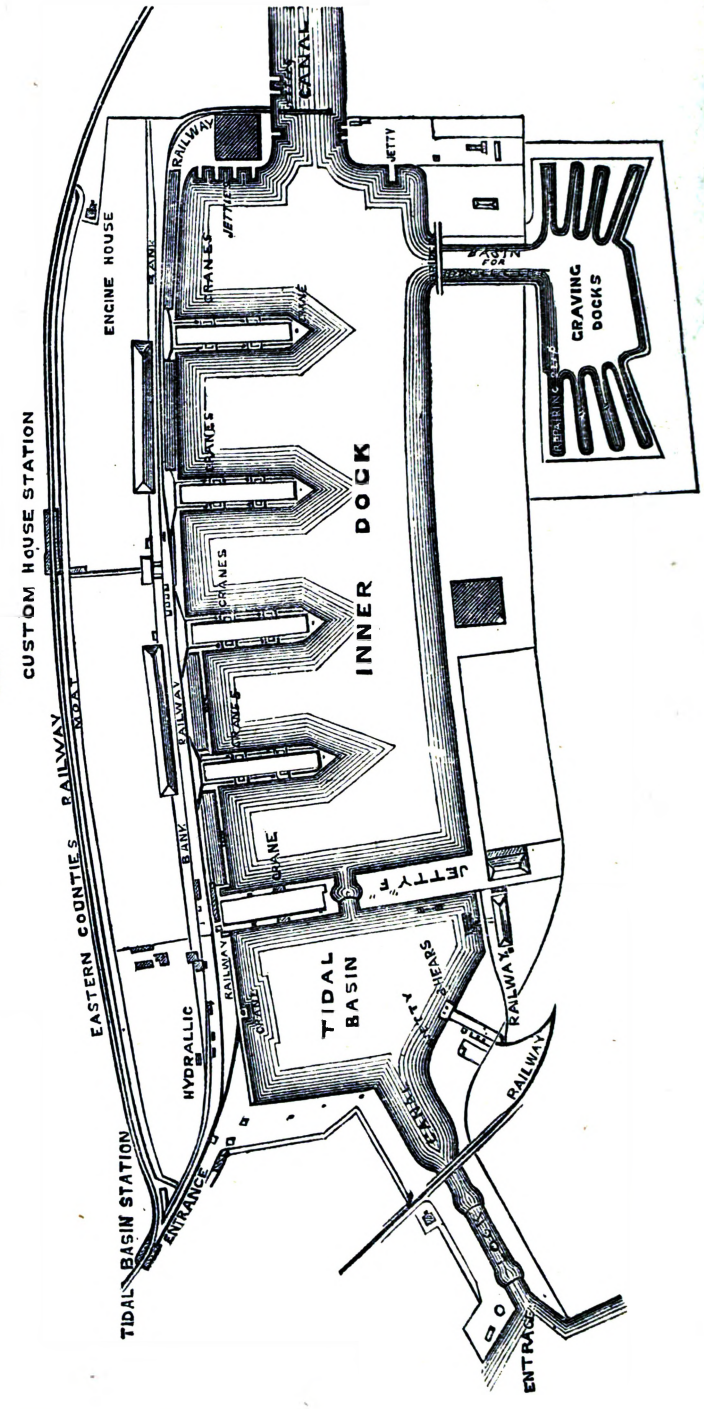

The concrete was composed of clean gravel, containing two-thirds coarse and one-third sharp grit, and Halling lime in the proportion of six to one. The lime was not ground, but used hot, and the concrete was found to set very hard.

Upper and Lower Gate Platforms.—It has been already stated that the London clay was found at about 37 ft. below Trinity high-water mark. In consequence of a good, and at the same time an impervious, foundation occurring at a convenient depth, an invert was dispensed with, and ordinary brickwork in level courses was employed, Figs. 2462, 2464. Areas 120 ft. wide and 83 ft. 3 in. long for the upper platform, and 120 ft. wide and 73 ft. 3 in. long for the lower platform, were laid bare down to the London clay, and round each of them a single row of elm sheet-piles, 16 ft. in length and 8 in. thick, was driven close, to a depth of 6 or 7 ft., into the solid clay, the heads being levelled and secured by walings; and within the spaces so enclosed the brickwork of the platforms was laid. The thickness of this brickwork in the case of the lower gates was 8 ft. 6 in., reckoning to the under-side of the shutting sill, over that portion of the area traversed by the gates and included between them when open; while the rest was carried up a foot higher, or 9 ft. 6 in. to the top of the shutting sill. The sill of the upper gates being 2 ft. 6 in. higher than the lower sill, the thickness of the brickwork is here reduced to 6 ft. 6 in. and 7 ft. 6 in. in situations corresponding to those previously described; but as the clay is found here at the same level as at the lower platform, the additional depth of 4 ft. 6 in. is made up with concrete. It will be seen that the sufficiency of this mode of construction is mainly dependent upon the means and care taken to prevent the water from getting to the under-side of the brickwork, and blowing it up by its lifting power. The weight of the brickwork is wholly inadequate to resist the lifting power of the water. For example, in the case of the lower-gate platform, with the water standing outside at the level of ordinary Trinity high water, the pressure of the water on the under surface of the brickwork, if it had access there, would be more than 2300 lbs. a square foot, while the weight of the brickwork inside, with 10 ft. of water upon it, would only amount to 1640 lbs. a square foot. See DAM. Hence the importance of taking out all the gravel, in order to bring the brickwork and concrete into direct contact with the impervious clay, and the advantage, if not necessity, of the precaution of covering the horizontal joints with the close sheet-piling. In this way the access of the water to the under horizontal surfaces is so interfered with, that its lifting power is effectually neutralized without the help of the side walls, as when an invert is employed, at the same time the horizontal disposition of the brickwork, perfectly free from all complexity, affords the greatest facility for bedding holding-down plates for the shutting sills, pivot-crosses, roller-paths, and so on. Upon these platforms the side walls are carried up in brickwork, including the copings, to heights above the sills of 33 ft. and

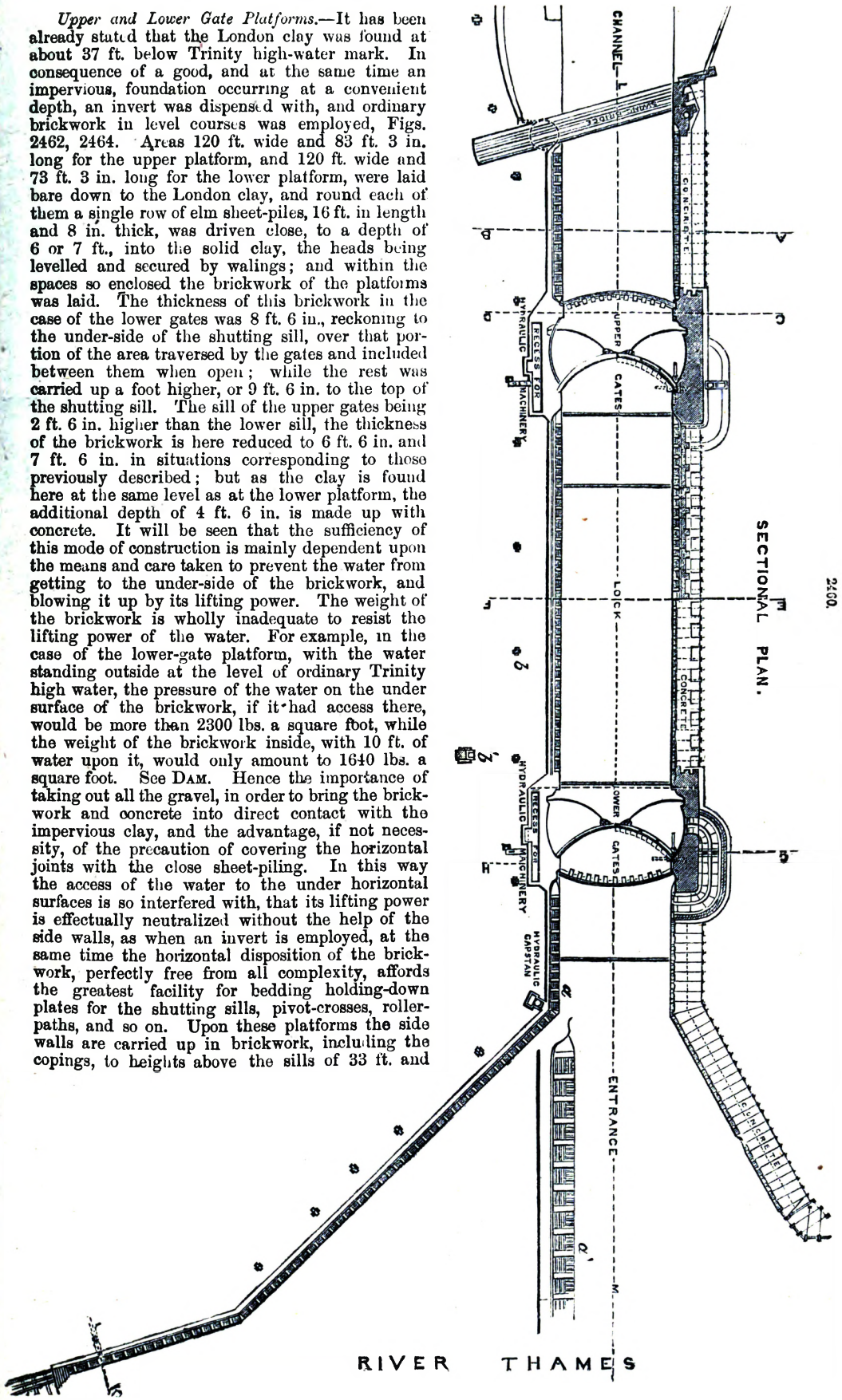

30 ft. 6 in. respectively, and at a minimum distance apart of 80 ft. They are 20 ft. thick where they connect with the concrete walls and iron piling, and continue so till the curved recesses for the gates commence, by which the thickness is reduced to 11 ft. in the central part of the hollow.

2461.

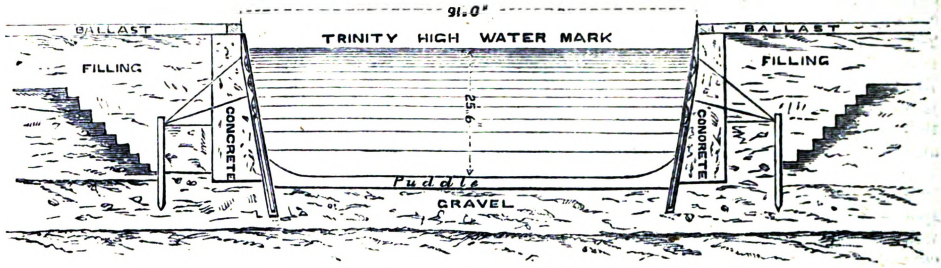

Section on line A B.

2462.

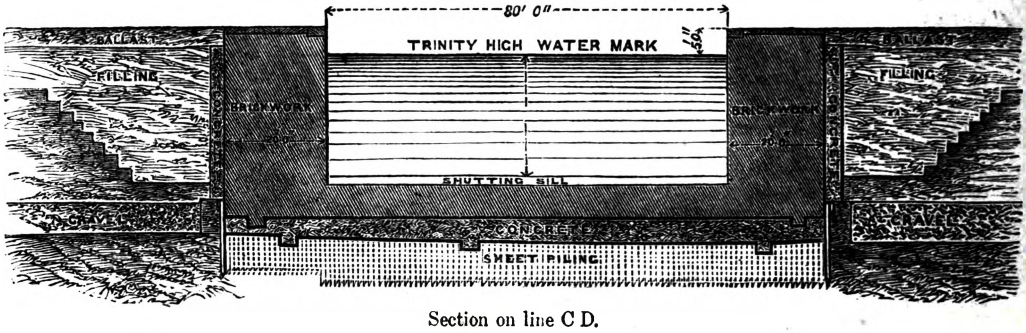

Section on line C D.

2463.

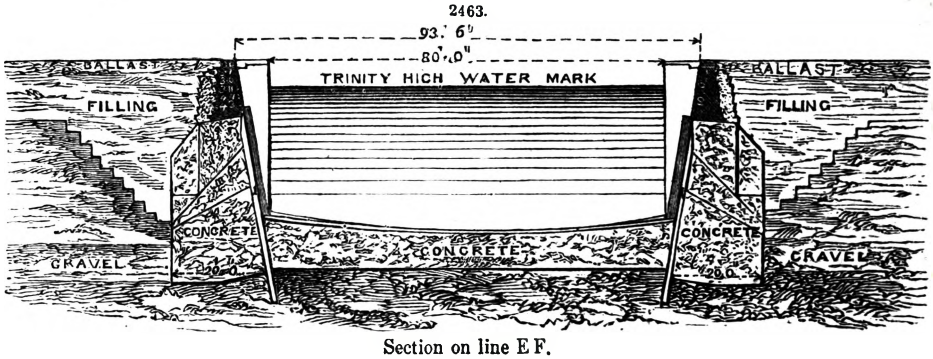

Section on line E F.

2464.

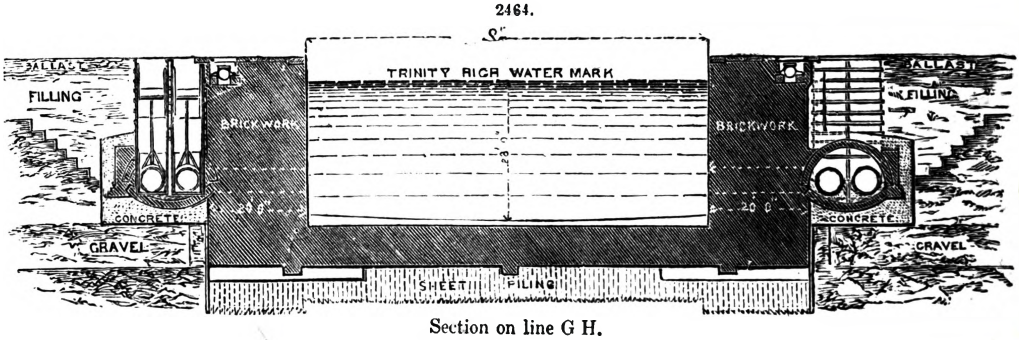

Section on line G H.

The hollow *quoin* is a portion of a circle, having a radius of 12 in., and the length of the arc of contact is also 12 in. Vertical chases are left in each side wall for receiving the roller-frames when the gates are opened back, the break in the coping being covered with a cast-iron plate. Chambers are also provided for the chain roller boxes and chain ways, which are of the ordinary description, lead up to the vaults containing the hydraulic machinery, Fig. 2460. for moving the

Section on line I K.

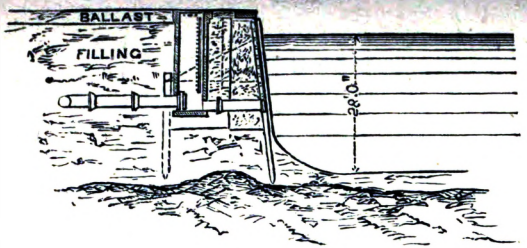

Section on line L M.

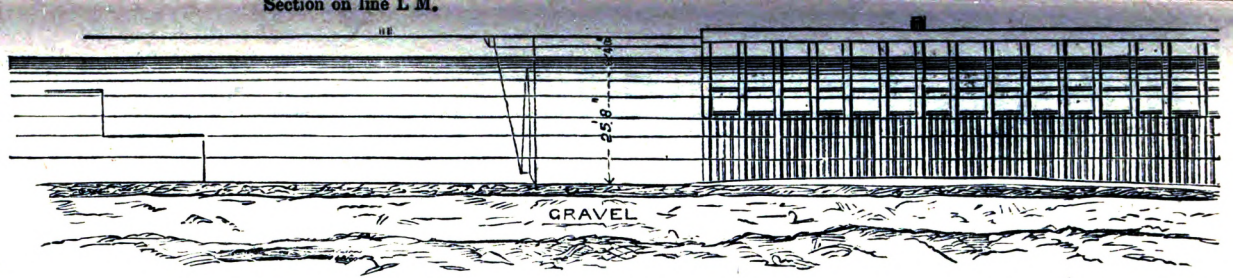

Section on line L M—*continued.*

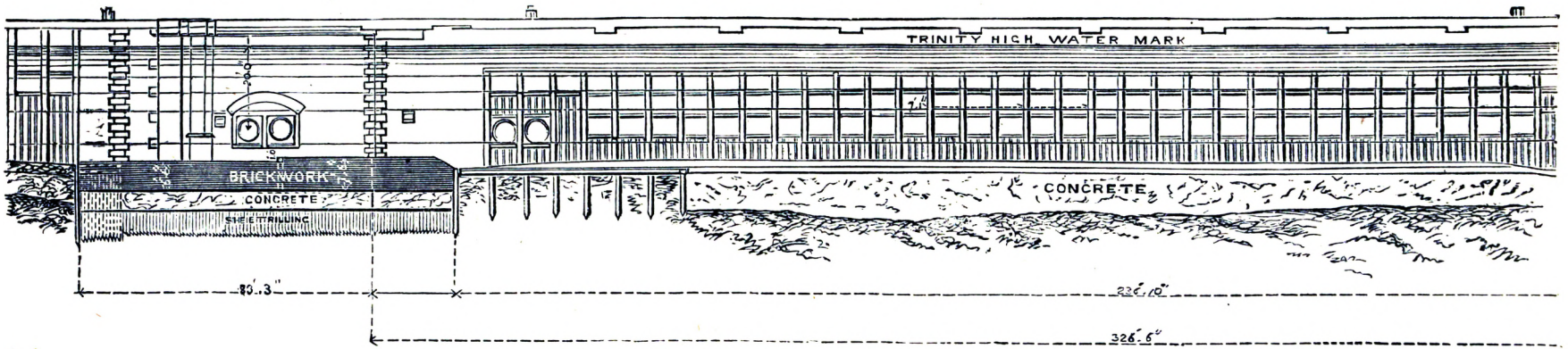

Section on line L M—*continued.*

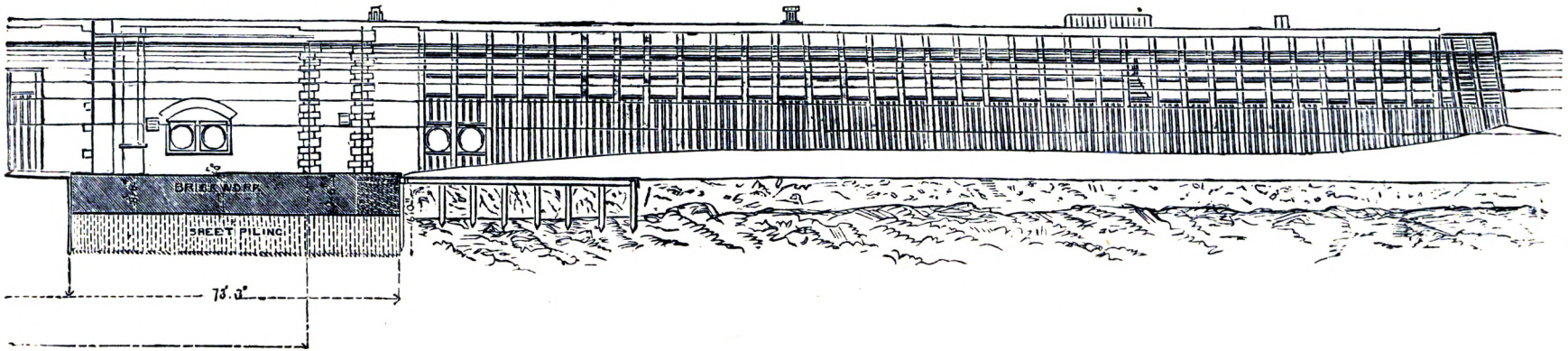

gates, which is situated just beneath the upper level of the wall, and to the rear of it. The side walls at the ends are raked round in a double-curved form, to meet the batter of the piled and concrete wall of the lock-chamber, so as to avoid a sharp vertical arris. Where the vertical part terminates, at the east end of the wall of the upper gates, and the west end of that of the lower gates, a hollow *quoin*, somewhat similar in form to that for the gates, is placed to receive the caisson, a step, or sill, being provided in the bottom for the same purpose. The hollow quoins, the external arris of the gate recess, the caisson quoins and sill, and the copings and bed stones for the anchors (see ANCHOR), were made of a compact sandstone, and these constituted all the stone employed, with the exception of that required for fixing the hydraulic machinery. The brickwork was composed of bricks made of clay from the excavation, faced with Maidstone bricks, laid in mortar, composed of clean sharp sand, found on the site of the docks, and Halling lime, *gauged* in the proportion of two to one.

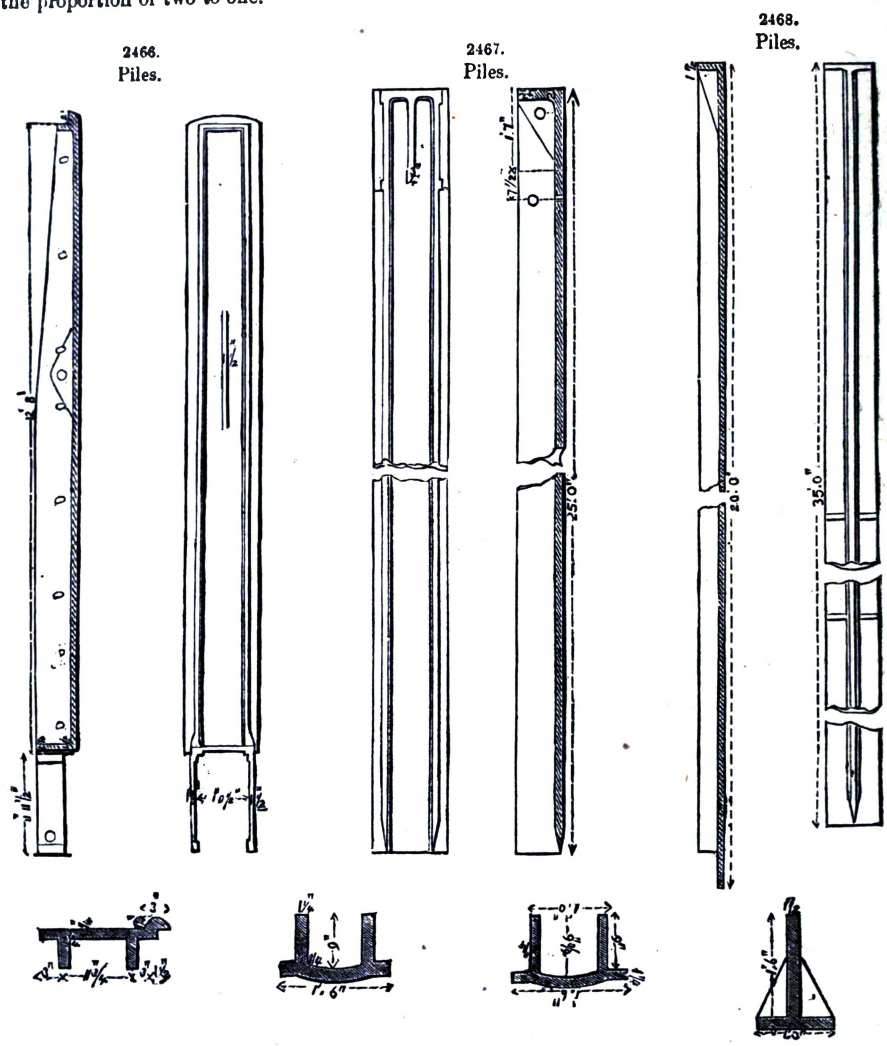

Sluice-Pipes and Sluices, Figs. 2464, 2465.—For the purpose of filling and emptying the lock-chamber eight sluice-pipes are provided, four at the upper and four at the lower gates. These pipes are of cast iron, 5 ft. in diameter, with the centre, or axis, placed 9 ft. below low-water mark. They are laid in pairs, through each side wall; the face-plate of the inlets being recessed in the deepest part of the curve, Fig. 2460. After passing to the back, they are turned, so as to run parallel to the lock for a distance sufficient to clear the end of the wall, beyond which they are again turned towards the piling of the lock, each pipe entering the centres of two contiguous bays. The outlets are formed of cast-iron plates, similar to those filling the upper spaces between the main piles, but pierced with trumpet-shaped apertures, with flanges behind for the purpose of connecting them with the pipes. The pipes at the back are bedded to half their depth in concrete, laid in a brick culvert 16 ft. in diameter, the open space above the pipes affording facilities for examination, and for the execution of any repairs that may be necessary, without disturbing the more solid work.

The sluices are similar to those used in water-works. The paddles are of cast iron, faced with

brass. A cast-iron trunk, with an internal capacity of 6 ft. by 2 ft., is brought up from each to the coping level, in the upper part of which is contained the hydraulic apparatus for lifting and closing the sluice-valve. These trunks permit the paddle to be easily withdrawn for repair. Provision is also made by which all the sluice apparatus from the bottom can be taken out, without disconnecting the pipes. In this, as in every other case where it was practicable, the principle was acted upon—to afford, in the arrangement of the design, and during the construction, every possible facility for the subsequent examination and repair of those parts which are most liable to get out of order.

The portion of the lock bottom beneath the outlets, and therefore exposed to the wash and disturbing action of the water, is floored for a length of 50 ft., from the termination of the brick platform, and for the full width, with creosoted planking, secured by means of walings to piles, driven 7 ft. apart over the area. The spaces between the heads of the piles, the walings, and the planking are filled in with concrete to a depth of 2 ft.

The Wrought-iron Gates.—Of these there are three pairs; the upper and lower gates of the entrance lock, Figs. 2469 to 2476, and the inner gates, separating the tidal basin from the main dock. The upper and inner gates are of the same dimensions; and the same general arrangement being employed in the three sets, a description of the lower gates will be sufficient for the present purpose, leaving a few minor differences to be pointed out afterwards.

Until within a comparatively recent period, timber was exclusively employed in the construction of lock gates; and while they remained of moderate dimensions, this material was well adapted for the purpose. But with the increased size of ships now employed in commerce, demanding larger lock entrances and gates, the difficulty of finding timber of sufficient length and scantling, and then of giving it the necessary curvature, has become so serious as to render the use of iron almost a necessity. In the earlier examples cast iron was employed for the internal framing. This was generally covered with planking, but in some instances wrought-iron plates were used instead of the planking for the skins of the gates, advantage being taken of the opportunity afforded by this arrangement to diminish the weight on the points of support, by the flotation obtained by excluding the water from the interior of the gate. The cast-iron framing is now advantageously superseded by the use of wrought iron, so that the whole gate, with the exception of the heel and mitre posts, and shutting sill, which are generally either of wood or of cast iron, is constructed of this convenient material, which, combining strength with lightness, avoids at the same time the lesser evils of unequal expansion, screwed connections, and other inconveniences, as well as the risk of fracture from sudden blows, to which cast iron is liable. For the gates of the Victoria Docks timber would have been very unsuitable, not only on account of their large dimensions—the lower gates having a span of 80 ft., and a height of 31 ft.—but because of the considerable amount of curvature given to them, the versed sine being 20 ft., or one-fourth of the span.

The form of the outer curve of the pair of gates is the arc of a circle having a radius of 50 ft., the distance between the skins at the heel and mitre posts being 2 ft., and at a point midway between them, 3 ft. The inner boundary is formed of two arcs of circles struck from centres 9 ft. 5½ in. apart, with a radius of 59 ft. 9½ in. The space between these curves represents the form of the fourteen horizontal diaphragms in each leaf, varying in distance apart from 1 ft. 11 in. at the bottom to 3 ft. at the top, and placed parallel to the floor of the lock, with the exception of the bottom one, which is sloped 9 in. upward at the heel-post, to give more room beneath for the cast-iron step-piece and pivot. On the under-side of this bottom plate, which is ¾ in. thick, is secured, by means of T-iron bracket-pieces, the timber which meets the cast-iron shutting sill. This is made of green-heart, 9 in. deep and 4½ in. thick.

The other horizontal diaphragms are ½ in. thick, and are connected with the skins by T-iron, 4½ in. by 2½ in. in section, and by angle-iron 2½ in. by 2½ in. in section. There are also two vertical diaphragms which divide each leaf into three nearly equal parts, passing continuously from the top to the bottom, and therefore intersecting each horizontal diaphragm, the T-irons and angle-irons of which are brought round and riveted to the vertical diaphragms. This arrangement subdivides the horizontal cellular spaces, and also prevents the gate from twisting. Man-holes are provided in each compartment through each diaphragm, to give access to every part of the gate, and they are closed by covers at the proper level for giving the requisite amount of flotation. Of the framework thus constructed the outside plating is riveted. This varies in thickness according to the amount of strain it has to bear, from ¾ in. at the bottom to ⅜ in. at the top. The plates are disposed with their lengths placed vertically, all the joints being provided with strips on the outside and on the inside, to ensure their being water-tight. Short horizontal strips are also required, where, from the passage of the vertical diaphragms, it is impossible to calk the horizontal T-irons quite close into the corners.

In the caisson, which was constructed subsequently, the widths of the plates forming the skins were placed vertically, and with advantage.

The heel and mitre posts, which are of green-heart timber, are bolted to the strong vertical plates forming the terminations of the ironwork of the gates. They are kept in place laterally by an angle-iron, 3 in. by 3 in. in section, riveted on each outer edge. The bolt-holes are deeply countersunk, and the holes filled with green-heart plugs, set in marine glue. The passing of these bolts through the vertical diaphragm-plates, and the difficulty of keeping them well tightened up, has been the source of some leakage into the gates, and even now occasionally gives trouble.

The attachments of the chain, for opening and shutting the gates, consist of strong gusset-pieces, riveted to the outside plating, so as to take hold of one of the horizontal diaphragms. Strong bolts are passed completely through the width of the gate, so as to bring the strain as much as possible on both skins. These attachments are also placed opposite each other, one on the inside and the other on the outside of the gate, so that the bolts pass from one to the other. In the lower gates they are at a height of 12 ft. above the sill, so as to be accessible at low water. The sectional diameter of the eye-bolt is 2¼ in., that of the opening and closing chain is 1¼ in., and the greatest strain brought upon them by the hydraulic machinery is about 7 tons per inch.

The footpath platform at the top, which is 3 ft. 6 in. wide in the middle, and 2 ft. 6 in. at the

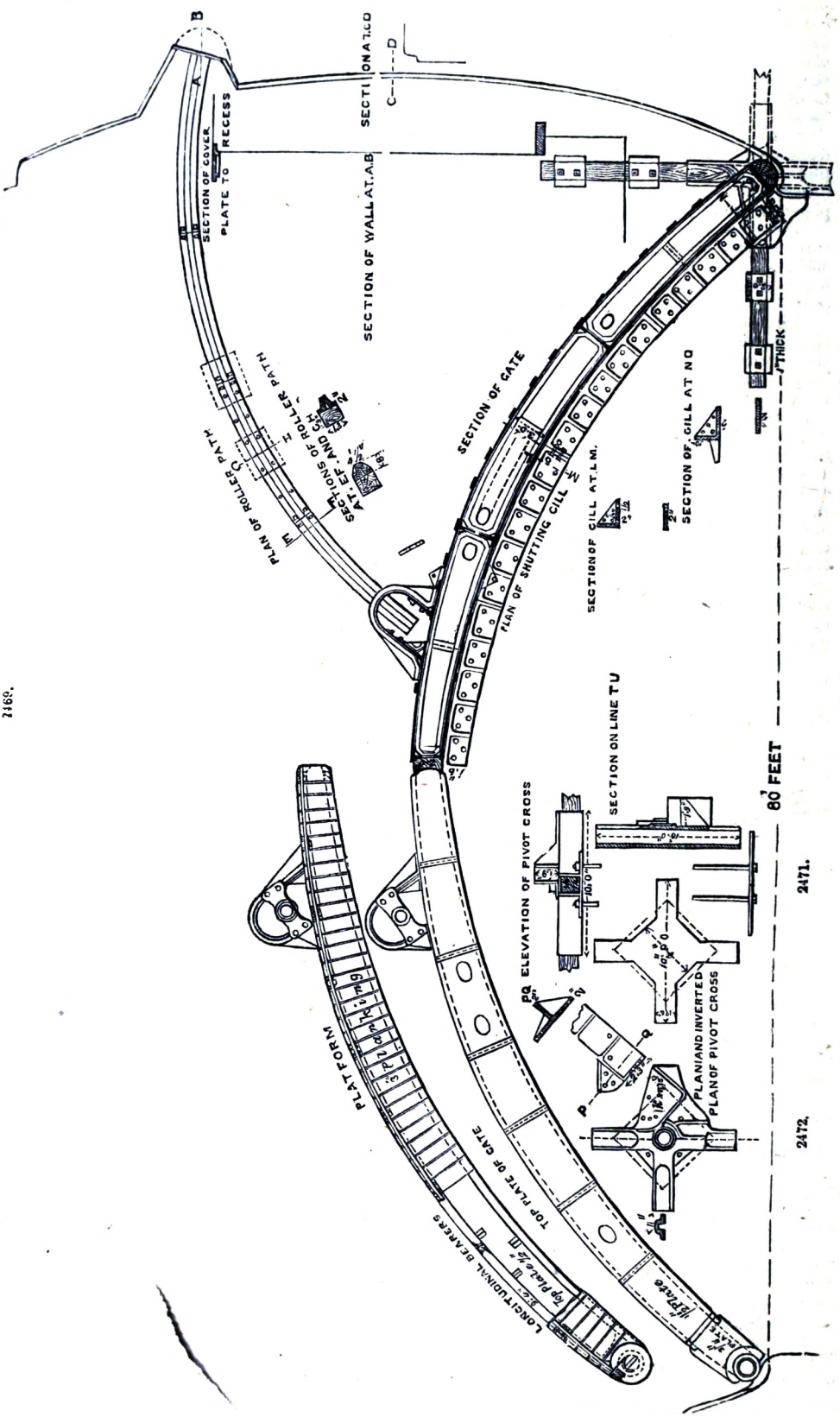
SECTION OF WALL AT A.B
SECTION ON C D
SECTION OF COVER PLATE TO RECESS
PLAN OF ROLLER PATH
SECTIONS OF ROLLER PATH
SECTION OF GATE
PLAN OF SHUTTING SILL
SECTION OF SILL AT L M.
SECTION OF SILL AT N O
THICK
SECTION ON LINE T U
ELEVATION OF PIVOT CROSS
PLAN AND INVERTED PLAN OF PIVOT CROSS
PLATFORM
LONGITUDINAL BEARERS
TOP PLATE OF GATE
80 FEET
2469.
2471.
2472.

ends, consists of planking 3 in. thick, carried on cast-iron brackets, so as to be level with the coping of the wharf. The movable hand-railing on the side is 3 ft. high. Owing to the great curvature of the gates, a somewhat peculiar arrangement was necessary. In lock entrances generally, in consequence of the inconvenience and obstruction to the passage of ropes during docking hours, occasioned by the use of a fixed hand-railing, or fence, the standards have been usually connected by chains, and placed in sockets, so as to be easily taken out. This is an inconvenient method, and causes delay, from the number of separate parts, by encumbering the footway of the gates when down, and forming when up but an inefficient protection. In a recent example, the Hartlepool gates, which are straight, a rigid top rail was employed, connected by a knuckle-joint to the standards, which were jointed near the bottom, in such a way that the whole could be depressed, the top rail being parallel to the planking, and raised but a few inches above it. In the Victoria Dock gates, owing to the curvature, the standards cannot move in the same plane; they are therefore each made with a separate foot, in which they turn, as on a pivot, forming a swivel-joint. Above this is the lower hinge, and the top of the standard is connected with the top railing by a knuckle-joint, the railing being made of iron tubes 1½ in. in diameter, bent to the form of the gate. Each standard has a counter-balance weight, which works by a short arm below the planking, out of the way, and the railing can be readily depressed to within 6 in. of the coping level, and be raised again, by one man. When down, the curved extremity of the railing lies on the wharf, and ropes, being prevented from getting under it, rise and slide along the smooth rail, thus avoiding any entanglement or obstruction. When raised the rail is kept up by a simple catch, which is easily released by the pressure of the foot. This railing forms a rigid and efficient fence.

The points of support, and the mode of retaining the gates in place, must now be described. These comprise, the pivot-cross, pivot and step piece, containing the pivot-brass, the shutting sill, roller and anchor.

Pivot-Cross and the Pivot.—The foundation for the pivot consists of a massive cast-iron cross, the length of each of the four arms being 5 ft. from the centre of the pivot. These arms, which are hollow, are 18 in. square in section, and the metal is 2 in. thick, leaving an internal cavity 14 in. square. Strong oak timbers, 15 ft. long, are driven into these arms, projecting 10 ft. beyond the ends of the cast-iron cross. Through two of these timbers, four bolts, 2 in. in diameter, are passed down to two holding-down plates, which are 4 ft. square each, and are set in the solid brickwork. Between the arms of the cross, webs were cast, forming, with the included arms, an area of 16 sq. ft. Four bolts, each 2¼ in. in diameter, connect the web to a massive holding-down plate, 5 ft. square, also bedded 8 ft. in the solid work below. The pivot-cross is placed with its arms parallel and perpendicular to the lock wall, which stands on two of them; the other two, the upper surfaces of which are on a level with the bottom of the shutting sill, are held down by the plates and bolts, as already described. On the upper surface of the cross, projections were made for attaching the first length of the shutting sill; and exactly in the centre, a circular fillet was left, which was accurately turned out, for the reception of the pivot, which is of cast iron, 6 in. in height, accurately turned to a diameter of 11 in., in order to work properly in the brass of the step-piece. The lower rim is also turned, to fit the recess in the pivot-casting. The upper step-piece is a casting 1 ft. 5 in. in depth, and about 5 ft. 8 in. long, strongly bolted to the under-side of the gate. It contains a recess for the reception of the brass, which is 16 in. long, 16 in. wide, and 5 in. deep. The sides of the recess are 2 in. thick, and the brass is accurately fitted, by means of chipping pieces and planing. A space was also left for end play, to prevent any strain being brought upon the pivot by the wearing away of the timber heel-post.

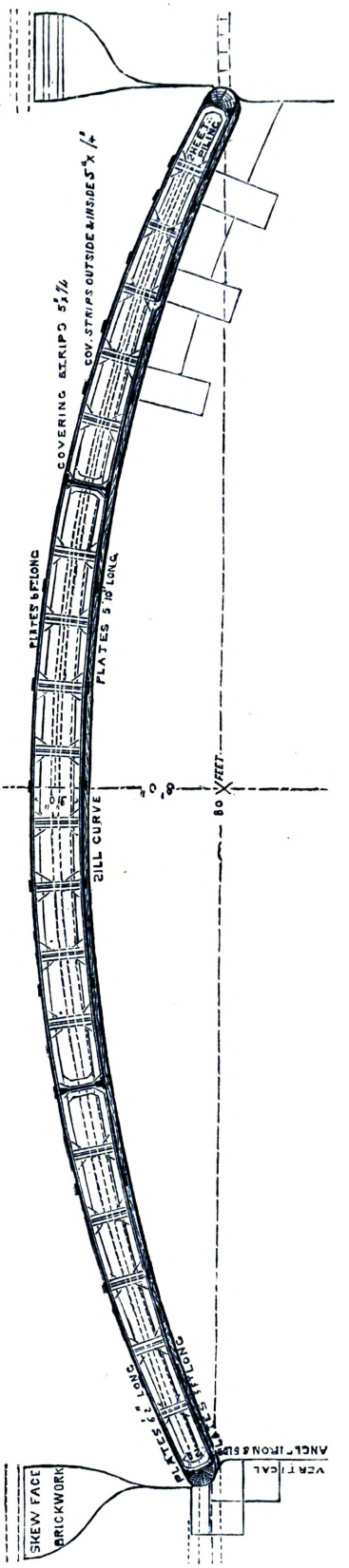

2470. Plan.

The Shutting Sill.—The shutting sill, the outer curves of which correspond to those of the inner curves of the gates, is composed of eight cast-iron segments, four on each side of the mitre-point. Its cross-section is in the form of an angle-iron, 12 in. high, 18 in. on the bed, and 2 in. in thickness. This is at the mitre or meeting point of the gates, and it gradually increases in height to 1 ft. 9 in., and in breadth to 2 ft. 3 in., respectively, where it is bolted to the pivot-cross. Each segment is strengthened by feathers, or gusset-pieces, at the back, at intervals of 2 ft. Chipping pieces are provided on all the junction surfaces, to ensure accuracy in fitting. The sill was secured by building into the brickwork, at a distance of 8 ft. beneath it, a strong cast-iron bed-plate, of the same area as the sill, through which bolts were placed and built in, leaving a small space round each other of them for adjustment. When the brickwork was brought up to the proper level, the sill was lowered down over the bolts, which were tightened up from time to time, and the spaces round them then grouted with cement. There are fifteen of these bolts for each segment, ten being 2 in. in diameter, and five of 1½ in. in diameter, the larger bolts being placed as near as possible to the inside of the vertical face of the sill. As soon as the bolts were sufficiently tightened, the brickwork was carried up to the level of the top of the sill, over the area not traversed by the gates.

2473. 2474. Sections of Lower Gates.

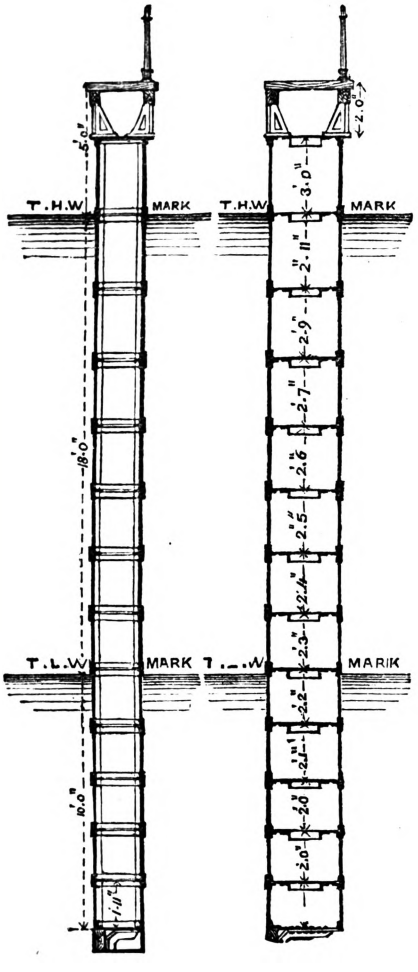

2475. Section of Upper Gate.

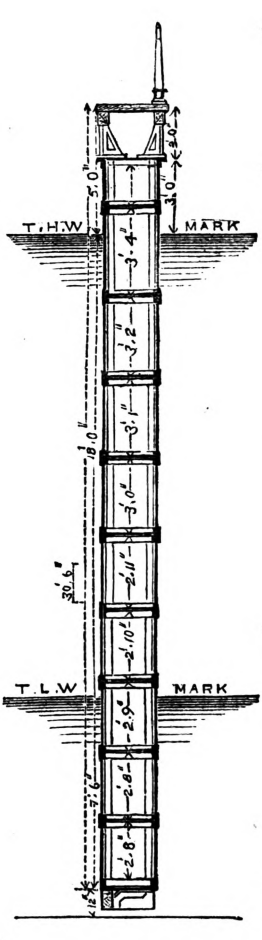

2476. Section of Caisson.

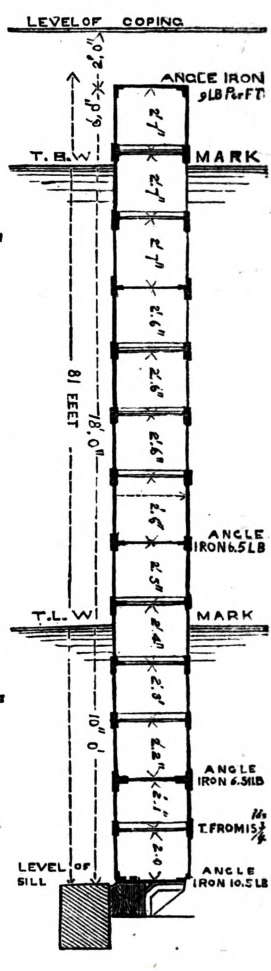

The Roller.—In the case of a gate with one roller, in order that it may work easily and bring as little strain as possible on the anchor strap, the axis of the roller must be in the vertical plane passing through the pivot axis and the centre of gravity of the gate, Fig. 2469. If the weight is to be distributed on the pivot and roller in a given ratio, the centre of gravity must lie between them, so as to divide the distance inversely in that ratio. This, in the case of a straight gate, would allow the roller to be placed under some part of the gate itself; but in a curved gate, especially when the curvature is considerable, such a position would in most cases throw an undue proportion of weight on the roller. Hence, in the present instance, it was so placed as to be wholly external to the outer curve of the gate. This, however, is advantageous, as it affords great facility for removing the roller for examination or repair without having recourse to diving apparatus.

The roller is a heavy cast-iron wheel, 7 in. wide and 2 ft. 8 in. in diameter, working in gun-

metal gudgeons of large dimensions, and kept in position by a framing of cast iron. This framing has at the top a hollow socket, which receives a step-piece, keyed into the bottom of a hollow column of cast iron, 12 in. in diameter and 23 ft. 7 in. long, and reaching nearly to the top of the gate. At its upper end this column is surmounted by a powerful screw, on which is placed a massive brass nut, working through a wrought-iron cross-head, by means of a capstan, which can be removed when it is not wanted. This cross-head is held down by four bolts, which are flattened out into straps, and are riveted against vertical pieces of wrought-iron plate, forming the sides of the roller-frame. These plates are connected with the whole depth of the gate by means of angle-irons and gusset-pieces. At the bottom they are carried up in a circular form to a height of about 6 ft., so as to enclose the roller and protect it from injury. Within this, on each side, two brass guides are riveted to the wrought-iron-plate sides, and are carried up (in the case of the lower gates) above low-water mark. The distance between these guides is the width of the roller-frame casting. They open out into a trumpet shape near the top, and form a kind of groove, in which the roller-frame can slide, thus securing it from lateral movement when at the bottom. With this arrangement, the roller can be easily removed; for the gates being closed, it is only necessary to turn back the brass nut at the top, by means of the capstan, so as to allow the cast-iron column to be lifted the requisite height of 2 or 3 in., to clear the step-piece at the bottom. The column can then be slung on the outside of the gate, and the roller-frame casting, with the roller, can be drawn up the groove, by means of chains attached to it for the purpose. When clear of the guides, it can be lowered into a boat, or be hoisted on the lock wall; and after examination, it can be replaced with equal facility.

The roller-path is of cast iron, in the form of a bridge rail, 4½ in. wide and 8 in. high. The flat sole, or bottom flange, which is 15 in. wide, rests on a sill of iron-bark timber; bolts are passed through both, down to cast-iron plates, 3 ft. long and 2 ft. wide, set in the brickwork. One of these plates is placed under each joint in the path, and another in the middle of each length. The path and roller were designed for a working load of from 12 to 15 tons. The destructive effects of a much greater pressure, to which they were subjected for some time, will be alluded to hereafter.

The Anchor, see p. 60.

Having completed the description of the lower gates, it may be desirable to point out wherein the gates differ from each other.

It has been stated that the lower gates are 31 ft. high; and as the sills of the upper and the inner gates are 2 ft. 6 in. higher than the lower sill, these gates are 2 ft. 6 in. shorter, or 28 ft. 6 in. in height. Consequently, the outer skins were made somewhat lighter, and the horizontal diaphragms were fewer in number. In other respects the gates are almost identical, with two exceptions, which remain to be noticed. First, the inner gates are not worked by hydraulic power; and secondly, sluice-pipes are not employed, but the sluicing is effected through the gates themselves. These sluices are rectangular, 6 ft. wide, and with a lift of 2 ft.; and there are four in each leaf of the gates. They are worked in pairs, from the top of the gate, by racks and pinions; the racks being hung on opposite sides of each pinion so as to balance the weights, and to open the sluices by raising the one and depressing the other.

In concluding this portion of the subject, a concise summary of the weights of wrought and cast iron work in the gates is appended.

	Tons.
Wrought iron in the lower gates, including the cast-iron pivot step-piece	198
Ditto in the upper gates	128
Ditto in the inner gates, including the sluices	138
Cast iron in the shutting sills, pivot-crosses, anchors, rollers, roller-paths, foundation-plates, &c., and bolts for each pair of gates	59

The Caisson, Fig. 2474.—It has been mentioned, in an early part of this article that the ancient river wall or bank, which is about 5 ft. above Trinity high-water mark, protects the marsh from the overflow of the river, which rises considerably above the level of the district. This bank, therefore, formed a natural dam, behind which the formation of the inner works of the lock-chamber, the brickwork of the gates, and the other operations could be carried on; and outside of which a considerable portion of the piling and concrete walling could be executed. But in order to effect the junction of the two portions and to complete the entrance works, it was necessary to remove a large quantity of material. This was done first by barrow work, and then, below low-water mark, by the more tedious operation of dredging. In order that this excavation might proceed simultaneously with the other dock works, it was essential to provide the means for keeping the water out of the dock at the time when the river bank was being broken into and carried away. Owing to the great width of the entrance, considerable expense and delay would have occurred had a coffer-dam been employed, and recourse was therefore had to a caisson. But this differed considerably in form from those in general use, and was not employed or handled in the same manner. The usual form of a caisson somewhat resembles that of a ship, having inclined stem and stern posts, which fit into grooves in the side walls, whilst the keel applies itself at the same time closely against a shutting sill. The new caisson, Fig. 2476, which was made of wrought-iron plates, is rectangular in side elevation, the heel-posts being vertical and shaped like those of the gates, so as to fit into a hollow quoin as into a kind of rebate. In plan it is like one leaf of the gates, being 3 ft. wide in the middle and 2 ft. at each end; but it is large enough to extend across the span of 80 ft. between the lock walls. Its curvature is not so great as that of the gates, having a rise or versed sine of only 8 ft. The outer and inner curves are struck from points in the axis line of the lock, with radii of 94 ft. 8 in., and 104 ft. respectively. The height is 31 ft., which is the same as that of the ironwork of the lower gates.

After the minute description already given of the gates, it will be unnecessary to enter into the same detail here, the general structural arrangements being similar in both cases. It may suffice

to state that there are but five horizontal diaphragms, of which two form the bottom and the top, and the three remaining ones are internal. The lowest of these is 4 ft. 1 in. above the bottom, the next 9 ft. 2 in. above that, then one 10 ft. higher up, leaving a space of 7 ft. 9 in. to the top plate. The position of the lowest inner diaphragm is not arbitrary or immaterial. It is placed at a distance of 4 ft. 1 in. from the bottom in order that the internal capacity or volume, comprised between the skins and the diaphragms, shall be equal to that of 25 tons of water. The object of this will appear presently. The diaphragms are connected by angle-irons, 3 in. by 3 in. in section, to the outer skins, which vary in thickness, from $\frac{1}{2}$ in. at bottom to $\frac{1}{4}$ in. at the top. The lengths of the plates are disposed horizontally, differing in this respect from the gates. In width they increase regularly from 2 ft. at the bottom to 2 ft. 7 in. at the top. The internal horizontal joints, except where there are diaphragms, are covered by T-irons, weighing 13 lbs. per foot. The vertical end-joints are covered, both on the inside and on the outside, with strips. The T-irons are strutted across at intervals of 4 ft. by similar T-irons, triangular gusset-plates being introduced at the ends to give more rivet-hold and stiffness.

The caisson is also divided by two vertical diaphragms into three compartments, as in the case of a leaf of the gates. It has heel-posts like the gates, and a lining piece of creosoted Memel timber to meet the shutting sill. This timber, having to carry the weight of the caisson, is made of full scantling 15 in. square. It is also provided near the bottom with two rectangular sluices; one 3 ft. 9 in. long and 9 in. high, allowing the water to pass through the gate to fill the dock; and the other 10 in. square, opening on the concave side to admit water into the bottom compartment, already described as having a capacity for 25 tons of water. A three-throw pump, the working barrels being $4\frac{3}{4}$ in. in diameter and 12 in. stroke, is provided for emptying this compartment, and with the sluices is worked by gearing from the top.

The caisson quoins are of Duke's Quarry stone. They are placed in the brickwork of the side walls, where they begin to rake back from the perpendicular to meet the batter of the piling. The sill against which the timber liner shuts is of the same stone. The caisson itself rests on the heads of the piles which surround and enclose the brick platforms, and which are here driven in a curve corresponding to that of the caisson.

In order to understand the working of the caisson, it is necessary to observe the distribution of the displacement spaces in the interior, Fig. 2477. The lower one of 25 tons has been already pointed out. Above this, the vertical diaphragms divide the remainder into three spaces, the middle one having a capacity for 25·7 tons of water, and the two outer ones for 44·68 tons each. Of these, the two last mentioned are kept empty. The middle one has apertures on the convex side so that water can freely enter the interior without passing through. The lower one is provided with special apparatus for filling or emptying at pleasure. The weight of the caisson being about 90 tons, if the water is pumped out of the bottom, the displacement will stand thus;—

2477.

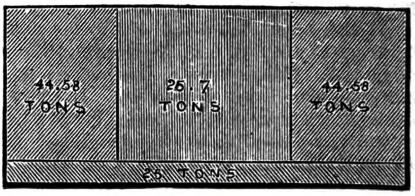

Showing the arrangement of the compartments of the Caisson.

	Tons.
Bottom	25·00
Right compartment	44·68
Left „	44·68
Total	114·36

This gives a floating power above the weight of the caisson of 24·36 tons, when it would float with the convex side downwards in a nearly horizontal position. If the small sluice was opened water would enter the bottom compartment, causing the caisson to tilt over, and gradually to assume a vertical position. During this time it could be drawn towards its place, and the heel-posts coming in contact with the quoins, the caisson could be guided into its proper position. If this operation was performed at the time of high tide, when there is a depth of 28 ft. of water on the sill, the lower compartment being full and the caisson in a vertical position, the displacement of the two side compartments would be diminished to 39·8 tons each, or 79·6 tons together; so that in this case the caisson would press the bottom with a load of 10·4 tons.

It will be seen that a caisson of this construction requires to get it out of its place only such a depth of water as will just float it, and as soon as it is free from the quoins it can be turned on its side, when it will present little surface to the wind, be quite stable in management, and not drawing more than 4 ft. water, can be readily moved from place to place.

In employing the caisson at the entrance to the Victoria Docks, the precaution was taken to put timber struts against the inside from sills bedded temporarily in the brickwork. A bed of clay puddle about 6 ft. high was also placed on the outside. No indication of weakness was observed, nor was there any leakage, the caisson doing its work perfectly. The greatest strain on the bottom section, with the entire head of 31 ft. of water, amounts to 86·5 tons per foot of depth, and such a sectional area is provided, exclusive of the bottom diaphragm, that the strain does not exceed $4\frac{3}{4}$ tons per square inch.

Casualties.—The casualties which occurred during the construction and subsequent to the opening of the docks, with the means adopted for remedying them and preventing their recurrence, will now be noticed.

Fracture of the Shutting Sill.—The earliest of these casualties, which was in fact but of minor importance, was the fracture of the shutting sill. The cast-iron shutting sill, as before stated, is

not only bolted down to foundation-plates, set in the brickwork, but is firmly connected, at each end, with the pivot-crosses, which are built into the heavy side walls. It will readily be inferred that the side walls, and with them the pivot-crosses, would settle to a greater extent than the comparatively light brick platform between them, and with it the corresponding portion of the sill. Such was found to be the case; for soon after the side walls were finished, the pivot-crosses were carried down about $1\frac{1}{8}$ in. on each side, while there was little or no subsidence of the sill in the centre. In consequence of this unequal pressure, the shutting sill was cracked about 3 ft. from the mitre; but the opening being very slight, the defect was readily repaired by bolting a plate of wrought iron at the back. This accident, slight as it is, points out the importance of guarding as much as possible against the effects of unequal loading, especially where cast iron is employed, in connection with brickwork or masonry. It suggests also the obvious expedient of allowing the side walls to settle before the holding-down bolts of the sill are finally tightened up.

Subsidence of the Side Walls of the Lock-Chamber.—This casualty was of a more serious character, involving the cast-iron and concrete walls of the lock-chamber. It occurred on Sunday, the 17th of June, 1855, at a period when great progress had been made with the works,—for the upper and lower gates had been lifted into their places, the caisson was nearly completed, the copings on the wharf were being laid, the bottom of the large dock was puddled, and, indeed, the removal of the river bank and the dredging at the entrance were the principal operations that remained to be done. There had been no symptoms of weakness, nor any premonition of what was about to take place, except that on the previous day some joints in the coping on the south side were observed to be a little open, but to so slight an extent that the circumstance was not reported. The next day, however, in the afternoon, the portion of the north side lying between the brickwork of the upper and lower gates began to give way, moving forward bodily into the lock, pushing up the thick puddle towards the centre, bending and breaking the tie-bars behind, and dragging the tie-piles forward, and in some instances breaking them off. A few hours afterwards the south side failed in the same way; but the brick side walls and platforms remained wholly unaffected, the most careful observation failing to discover any movement in them.

It being Sunday, some time elapsed before any men could be collected. They were first set to work to drag off the copings, and to lighten the earthwork behind. The most energetic measures were then adopted for reinstating the walls, and for this purpose the old concrete was cleared away from behind, and the iron piling was driven to a depth of 10 ft. lower than previously, the sheet-piles entering 5 ft. into the clay. A solid concrete wall was then commenced, at a depth of about 3 ft. in the clay, which was carried up for a height of 18 ft., with a thickness averaging 18 ft. Above this level, the thickness was reduced to 10 ft., with counterforts 6 ft. square at intervals of 10 ft. These counterforts were carried up nearly to the top of the piles. On this concrete wall there was built a brick wall, averaging 4 ft. 6 in. in thickness and 10 ft. high, with counterforts at the back 3 ft. square, corresponding in position to those of the concrete below. On the top of this wall the coping of the wharf was placed. The piles were tied back by the rods passing through the concrete and secured to cast-iron plates screwed up tight against the back of the concrete wall. The whole of the clay puddle in the bottom was taken out and replaced by concrete with a top layer of Portland cement concrete 6 in. in thickness. This work was completed by the 21st September following, or in a little more than three months. Considering the number of piles that had to be re-driven, and the quantity of material to be moved and replaced, it must be admitted that the work was expeditiously executed.

A failure, occurring so suddenly and on so large a scale, and appearing to be the result of an extended and powerful agency, demands some attempt at explanation. This will be better understood, after some preliminary observations. Ever since the commencement of the works, in the middle of the year 1853, the great pumps had been worked night and day. These were situated to the rear of the north wall of the lock-chamber, between the upper and lower gates, and at no great distance from them. They drained the water down to the level of the floor of the lock, the additional depth required for getting in the lower brickwork being kept free from water by means of a portable engine, lifting into the sump of the large pumps. As this operation had been going on uninterruptedly for two years, during which time a large excavation, to a depth of 16 ft. below the level of the marsh, was in progress, the surrounding country was gradually drained of its land water, for a considerable distance, in all directions. In corroboration of this remark, it may be stated that the water in a well situated in East Ham parish, more than two miles and a quarter from the docks in a direct line, was much lowered while the works were in progress, but it recovered its level when they were completed. At the time of the accident the pumping had been discontinued for some weeks, in order to allow water to collect in the dock to a depth of 3 ft., to test the clay puddle; but it was excluded from the lock-chamber by a temporary stank. It would result from the fact of the ground gradually recovering the charge of water which had been drained from it, that additional pressure would be brought upon the back of the lock walls, and under disadvantageous circumstances; for while, in ordinary cases, where there is a possibility of water collecting behind a wall, provision is made for letting it escape, here, from the nature of the case, this was impossible, and its effect was in consequence aggravated. The substitution of clay puddle for the gravel at the bottom, was to a certain extent an evil, as the walls were thereby deprived of weight at the foot, the tendency of which would have been to prevent forward motion. A further confirmation of the opinion that the failure resulted from the action of accumulated water, is suggested by the fact that the movement of the two sides was nearly simultaneous.

Fracture of the Pivot-Casting.—This occurred to two out of the four gates of the entrance lock, and it was some time before the true cause of the failure was discovered. This casting, which is bolted to the under-side of the gate, has been described as having a box, or recess, of an octagonal form, to contain the pivot-brass. It was found, in each case, that the same adjacent sides of the box had given way, namely, those between the brass and the hollow quoin, and between the brass

and the shutting sill respectively. It is also necessary to state that in fitting the heel and the mitre posts, it was considered desirable to make allowance for some shrinking and compression of the wood. Provision to the extent of $\frac{3}{16}$ of an inch, in the length of the two leaves, was therefore made; but experience showed that this was more than was required. As the mitre-post could not be easily reduced, so as to permit the timber sill to be brought into perfectly close contact with the iron one, a lining piece of thick flannel was secured to the former by copper nails, to make the joints water-tight. When the first fracture occurred, it was attributed to some irregular or undue thickness of this lining near the heel-post, or to the accidental interposition of a hard substance between the timber and the iron sills. A portion of the flannel was therefore removed, and diligent search was made for any iron bar, chain, hard wood, or stone, which might by possibility have occasioned the mischief, but without success. The broken box was repaired, as shown in Fig. 2478, by bolting on a cast-iron fish-piece to one of the side flanges of the pivot-piece, which was conveniently situated for the purpose. This operation of drilling three holes, $\frac{3}{4}$ of an inch in diameter, through a thickness of $2\frac{1}{2}$ in. of cast iron, under water, and of bolting on the fish-piece, was accomplished by a diver in about five hours.

2478.

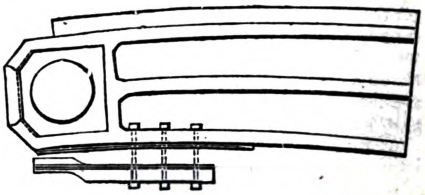

Plan of the under-side of the pivot-piece, showing the cast-iron fish and the broken portions.

Notwithstanding every precaution, the fish-pieces were frequently broken, and it became evident that the true solution of the problem had not been discovered. The north upper gate having proved the most troublesome, and its pivot-casting having been further damaged by the use of a wrought-iron fish-piece, it was resolved to float the gate in order to investigate more closely and to replace the casting by a wrought-iron step-piece. From the appearance of the brass it was evident that it had been subjected to great pressure. In consequence of the radius of curvature of its internal surface having been erroneously made somewhat less than that of the pivot, the pressure, instead of being distributed over the whole area of the step, was found to be restricted to a comparatively small annular portion situated near its circumference. The corresponding surface of the brass may be considered as a portion of a hollow cone, which would aggravate the effect of the pressure according to the disparity of the two curvatures, the ultimate result being that the brass seized or adhered to the pivot to such an extent that the gate turned upon the brass instead of upon the pivot, breaking away the walls of the box in the effort to free itself. The great weight on the pivot is accounted for by the fact that, owing to the leakage through the bolt-holes of the heel and mitre posts, and through some portions of the gates, the calking of which was not complete at first, the gates were frequently nearly full of water. In the case of the lower gates, the points of support, namely, the pivot and the roller, were sustaining from 40 to 45 tons each, instead of 12 or 15 tons, the working load which each was intended to carry. The leakage was soon remedied, and the gates then having a proper amount of flotation, no fracture from this cause has since occurred.

It must be borne in mind that hydraulic machinery was employed from the first to open and shut the gates, and although a great additional power must have been required to open the gates when this seizing had taken place, a resistance represented by the force required to break down so large a section of cast iron, there were no ready means of measuring its amount or even of detecting its existence. If manual labour, at a crab, had been made use of, the resistance and the remedy would have been speedily discovered. It is, perhaps, worthy of consideration whether it would not be the most prudent course, in cases of this kind, to resort at the outset to a temporary expedient similar to the one alluded to, and when the true working *régime* has been ascertained to revert to the permanent arrangement.

There has been one instance of a fish-piece being fractured in consequence of a large fender, through carelessness, being lodged between the gate and the sill near the heel-post while the gates were being rapidly closed. To avoid such a contingency, the sill might be formed like an invert, the heel-posts being thereby raised several feet above the floor of the lock-chamber, then any obstruction calculated to do injury would have a tendency to fall towards the mitre-posts, where, if it were interposed between the gate and the shutting sill, it would be quite harmless.

Abrasion and Splitting of the Roller-Path.—This occurred at the lower gates only, and was a direct and intelligible result of the weight of the gates, caused by the leakage just mentioned, in consequence of which the load the path had to sustain was for a time three or four times the weight which it was intended to bear. The new path was made 7 in. instead of $4\frac{1}{2}$ in. in width, and in substituting this for the former one by means of divers, great facilities were afforded by the hard wood timber sill, for ensuring the accurate level and the adjustment of the several lengths.

On the Construction of the Jetties.—In the early part of this paper the jetties were incidentally noticed, and their number, situation, and general dimensions were briefly pointed out. It is now necessary to describe the mode of constructing the quay walls, and to give some other particulars relating to this portion of the works.

In general form, Figs. 2479 to 2483, each jetty is a parallelogram, 140 ft. in width for a length of 497 ft., and having a pointed or wedge-shaped termination, the sides of which are each 109 ft. 6 in. long, and inclined to one another at an angle of 80°. The total length of each jetty is 581 ft., and the level of the quay varies from 6 ft. to 9 ft. above Trinity high-water mark, according to the situation of the jetty in the dock.

A warehouse, comprising an upper floor, ground floor, and vaults underneath, nearly approaching an acre in extent each, occupies a length of 500 ft. and a breadth of 80 ft, out of the entire width of the jetty, leaving a space 30 ft. wide on each side to the edge of the quay, for the railway, sidings, and the temporary storage of goods. In order to afford facilities for the discharge and arrangement of goods, each jetty is provided with nine hydraulic cranes. One, capable of lifting 5 tons, with a

range of 31 ft. beyond the quay, is placed at the pointed end, and eight others lifting 2 tons each are disposed in pairs at convenient distances along the sides. One crane of each pair is fixed near the edge of the quay, with a sweep outwards of from 21 to 23 ft., and the other is placed against the outside wall of the warehouse, for the purpose of removing goods to or from the upper floor or the vaults beneath as may be required. Sidings and turn-tables are also provided at the rear of the jetties, for the purpose of collecting or distributing the wagons on the line of railway leading to and from the docks.

The side walls, which are vertical, consist of cast-iron piles, driven 7 ft. apart from centre to centre, and upright inverted walls of brickwork, 14 in. thick, filled in between the piles, and set in Roman cement mortar. The concave surface of the invert, which has a versed sine of 12 in., is external, or in contact with the water of the dock; while the convex, or inner surface, is backed with concrete, and behind this with clay. The piles, which are T-shaped in section, are 35 ft. long, 12 in. wide on the face, and, averaging 1½ in. thickness of metal, weigh about 1¾ ton each. They are connected, in pairs, across the width of 140 ft., by two tiers of horizontal tie-bars, 2 in. in diameter, and fixed to the back feathers of the piles, which are 18 in. deep, by means of eye-bolts furnished with a screw, by which the piles can be adjusted so as to be exactly in line. The upper and lower tie-bars are fixed at depths of 5 ft. and 17 ft. below the heads of the piles, which are thus prevented from being forced outward by the pressure of the earth behind them. The piles are driven to a depth of 28 ft. below Trinity high-water mark, entering the gravel 2 ft. below the clay-puddle lining of the dock, and, as this is 2 ft. thick, to a depth of 4 ft. below the finished surface of the bottom of the dock. The brickwork is commenced at a depth of 23 ft. below Trinity high-water mark, or 1 ft. above the bottom of the dock, and is laid on concrete 3 ft. in thickness. The concrete wall is carried up behind the brickwork, with an average thickness of 3 ft. 6 in. The back of the concrete wall is made straight and vertical, and against this the clay backing is filled in. The pointed extremity of the jetty is not formed with an angle-pile, but by filling one bay with curved cast-iron plates, backed with a mass of concrete. This not only serves the purpose of resisting the heavy blows to which this part of the work is exposed, but also forms a solid foundation for the 5-ton crane, which has been already mentioned. The top of the wall is covered with a cast-iron capping, bolted down to the heads of the piles, and finished off with a timber sill. The upper surface of the jetty, not occupied by the warehouse, is ballasted, and some portions of it, adjacent to the edge of the quay, is covered with planking. In order to prevent the passage of water from the dock under the walls, the clay puddle was brought up on the outside to a height of 5 or 6 ft. against the piles and brickwork, so as to fill up the angle formed by the vertical face with the floor of the dock.

It may be interesting to notice a circumstance which occurred soon after the water had been let into the dock, and which appeared to indicate at the time that the walls were not impervious, notwithstanding the precautions taken to render them so. It will be observed, Fig. 2482, that the floor of the vaults under the warehouse is about 2 ft. 6 in. above the level of the marsh, and therefore 6 ft. below that of the water in the dock, when standing at Trinity high-water mark. It was found, soon after the water had risen to that level, that it appeared in the vaults to an extent which unfitted them for the purposes for which they were designed, the effect being aggravated at spring tides. It was thought that the water must have come from the dock, either by direct leakage through the walls, by passing under them, or down the piles into the gravel below, and thence upwards again into the vaults. In order to obviate the inconvenience arising from it, pipes were laid beneath the floors against the side walls as low as possible, but retaining a good fall into the marsh drain; and careful observations of the quantities of water discharged by them were made from time to time. It soon became evident, however, that the

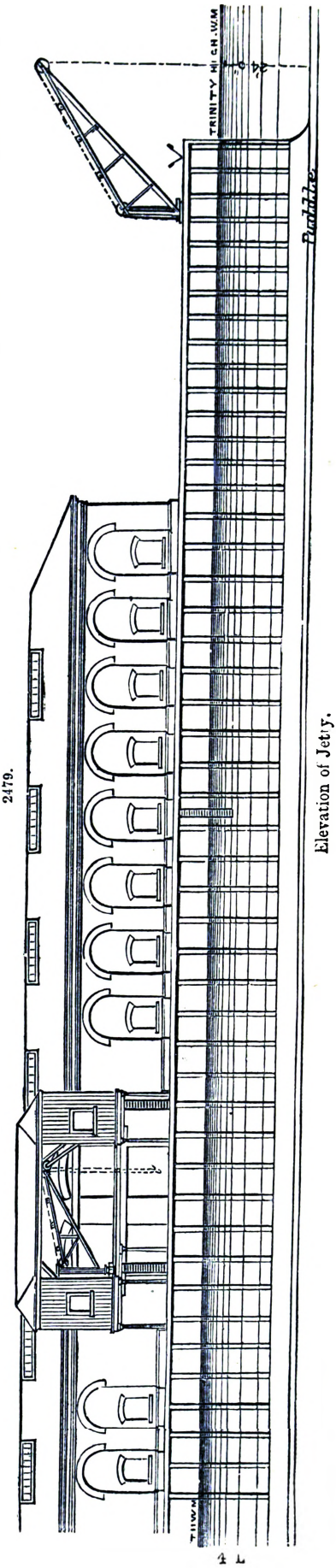

2479. Elevation of Jetty.

4 L

2480.

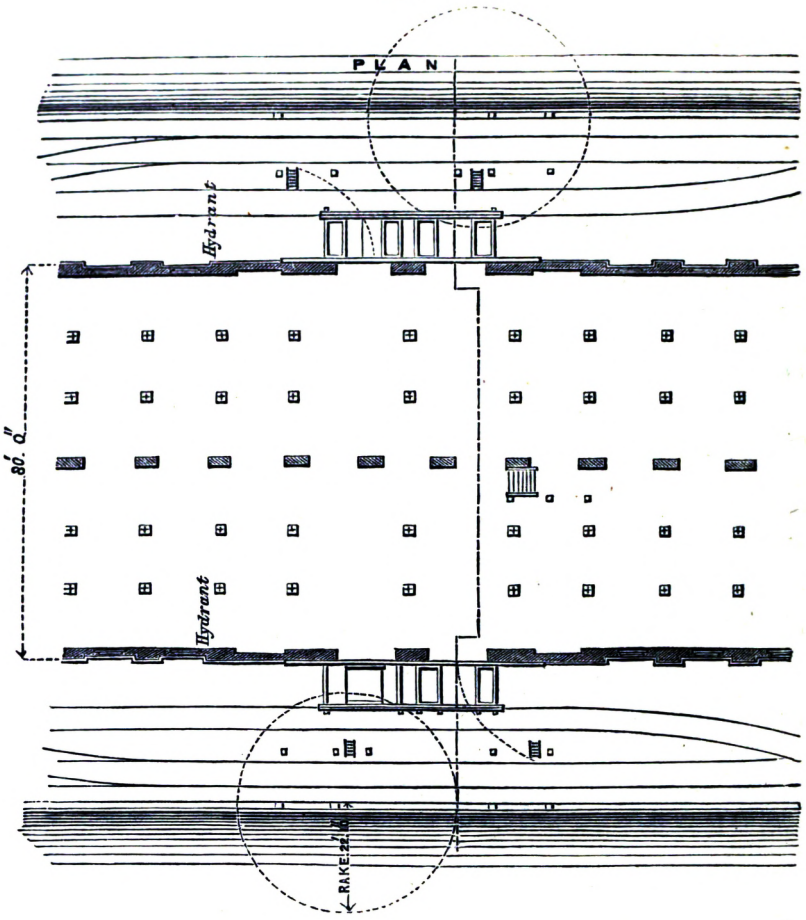

2481.

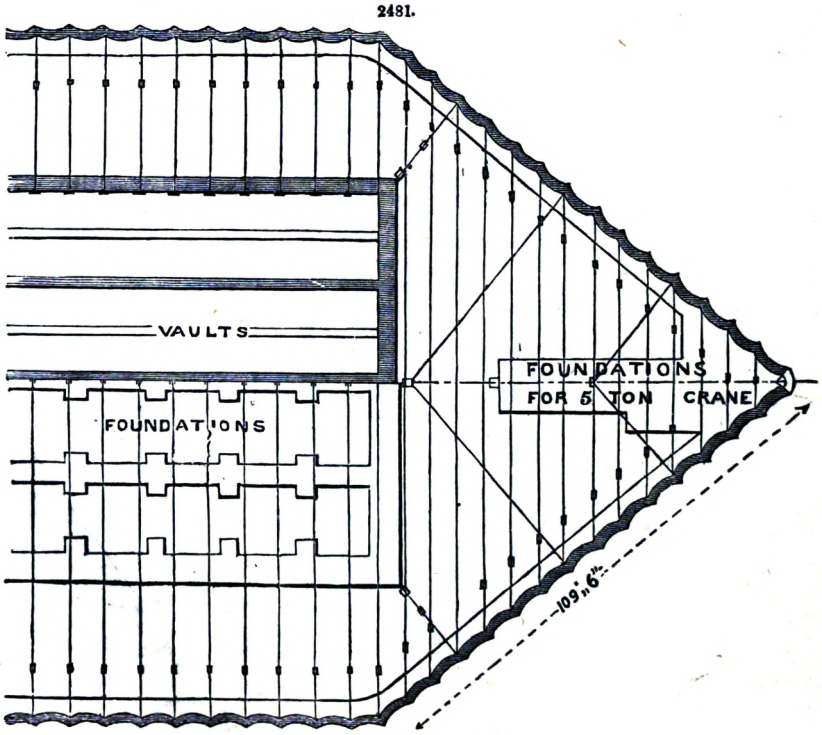

Sectional Plan.

water differed in character from that of the dock, by its containing much iron, which was deposited in the form of a rusty mud at the mouths of the drains, and that the quantity sensibly diminished. From these facts it was inferred that the water came from the gravel, rising, on the discontinuance of the pumping, to the general level of the district, which experiments showed to be within a few inches of the surface. In the case of the vaults the water found its way up the concrete walls, which, resting on the gravel, formed the foundation of the walls of the warehouse. The discharge from the drains is now slight, and is apparently independent of the rise of tide. This is probably due, partly to the consolidation of the ground against the concrete walls, and partly to the gradual silting up of the porous materials by the rusty deposit. This explanation has recently received a singular confirmation from the fact that, while the foundations were being put in for a warehouse, which has just been erected on the level of the marsh on the north side, and the water-level in the excavation was temporarily lowered by pumping, no water escaped by the drain from a neighbouring jetty; but shortly after the pumping was discontinued the discharge from the vault was re-established.

2482.

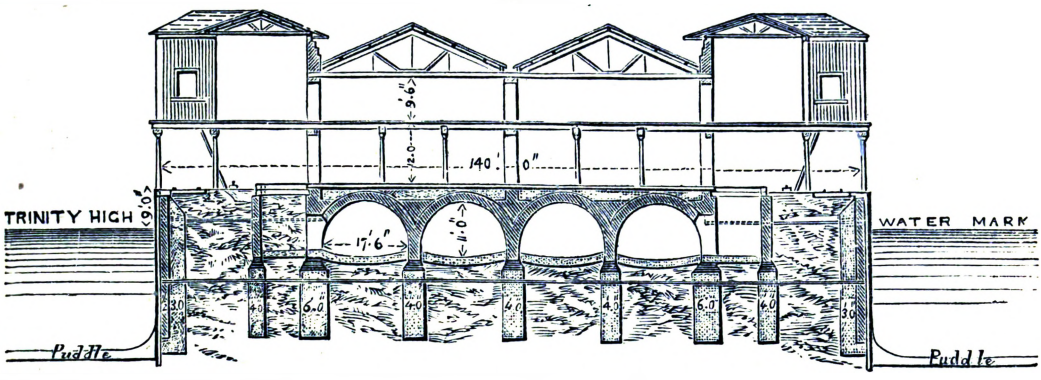

Cross-section of Jetty on C D.

2483.

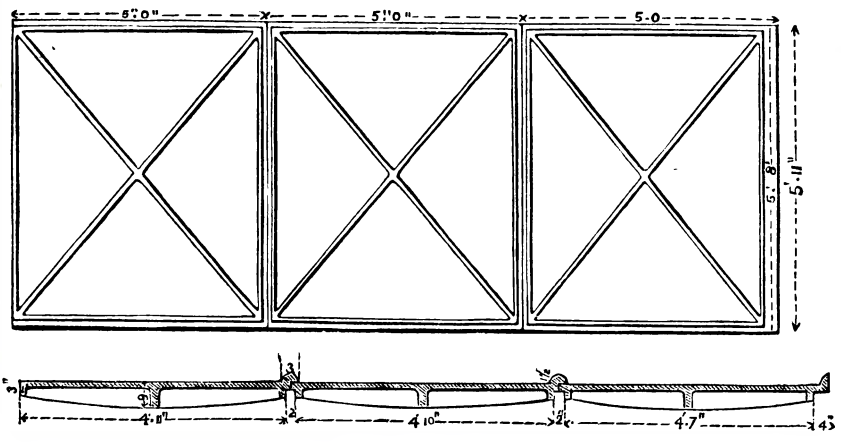

Wharf Plates.

Advantage of the Cylindrical Form of Lock Gates.—Some advantages of the cylindrical form of lock gates, or gates of continuous curvature, with respect to economy of material and arrangement of parts, will now be pointed out.

By the term "cylindrical gates or gates of continuous curvature," adopted for the purpose of distinguishing them from gates formed like a Gothic arch, a common and useful modification of the straight gates, it is intended to denote that the two leaves constituting the pair form a portion of a cylindrical ring, the outer or convex curve being the arc of a circle, extending from one heel-post to the other, and therefore continuous, while the inner curve is concentric with the former or nearly so. It is in the case of gates of large span that it is found advantageous to modify the form of the inner curve so as to reduce the thickness or distance between the skins of each leaf from its centre to the heel and mitre posts, in order to restrict the dimensions of the timber in these places. For this purpose two arcs are struck, one for each leaf, from centres which are near to each other, and with radii, which, while giving the proper thickness in the middle, secure, at the same time, the required diminution towards the ends. In this case, therefore, the inner curves would form a slight angle or mitre. In comparing this mode of construction with that of the straight-leaved gates, meeting at an angle, it is not intended to claim any advantage, either with regard to the amount of the strain brought upon the lock walls, or to the direction of it; for with the same rise and span the amount and direction of this thrust will be the same. This is not the case with the sections, and consequently the weights of the gates: for a considerable, not to say enormous saving, will be

found in favour of the cylindrical form of gate, even within the limits of the ratios of rise to span, assigned by every-day experience.

Before proceeding to exhibit this saving by actual examples, and in a numerical form, a few remarks on the strains to which these structures are exposed, and the mode of calculating them, will be advisable. In the case of the cylindrical gate, the pressure of the water being supposed to act on the convex side will be proportional to the depth, and in a direction normal to the surface. It will induce a strain on the gate wholly compressive, so long as it retains its true form, and it will be uniform on every radial section in the same horizontal plane. The amount of this strain has been shown by Barlow to be the pressure on the unit of surface, multiplied by the radius of curvature. This affords an easy method of calculating the section required to resist this strain at any given depth.

In the case of straight gates, however, there are two distinct strains to be considered; first, a transverse strain, arising from the pressure of the water at right angles to the surface, and similar to that on a girder uniformly loaded; and secondly, a compressive strain in the direction of its length, produced by the pressure of the other leaf on its extremity.

The transverse strain may be considered to arise from a central pressure, equal to half the distributed pressure on the leaf, and calculated as in the case of a girder; while the compressive strain is equal to this central pressure, multiplied by the cotangent of the angle between the gate and the chord line, at the heel-post, or by the tangent of half the angle at the vertex. Hence, if the angle at the vertex is 90°, the compressive strain is equal to the central pressure on the opposite leaf; if the angle is about 127°, or the ratio of the rise to the span is 1 to 4, as in the gates of the Victoria Docks, the compression is twice the central pressure; while in an extreme case, though an actual example, that of the ancient lock of Sparndam, where the angle is about 165½°, and the rise is $\frac{1}{16}$ of the span, the compressive strain is eight times the central pressure, or four times the total pressure, distributed over the opposite leaf. In calculating the strength of straight gates, a section must be provided, which is sufficient not merely to resist the compressing and extending strains brought on the outside and inside skins respectively by the pressure of the water, but also the compressive strain due to the other leaf, a strain which has been shown to be considerable in amount, even in cases falling under ordinary observation.

The next consideration is how and in what proportion the compressive strain due to one leaf is distributed through the skins. This, it is evident, cannot be determined accurately, for while on the one hand the effect of deflection might be to relieve the outer skin of a portion of its share of the work; on the other hand, the action of the hollow quoin, and the practice of making the joint of the meeting posts tight at the shutting sill and easing it upwards, would tend to increase the duty on the outer skin. It may be sufficient for the present purpose to assume that it is equally divided, half going to increase the compressive strain on the outer skin, and half to counteract or neutralize the extension strain of the inner skin, an assumption which, at any rate, is in favour of the straight gate.

For the purpose of comparing the quantity of material required under the two modes of construction for accomplishing the same object, it will be convenient to take three cases;—

First, that in which the ratio of the height or the versed sine to the span is small, say 1 to 10.

Second, that in which the ratio is intermediate between the extremes, say 1 to 6.

Third, that in which the ratio is large, say 1 to 4, as in the case of the gates of the Victoria Docks.

Since the pressure of the water varies with the depth, it will be convenient in every case to consider a portion or element of the gate only bounded by two horizontal planes 1 ft. apart, and immersed at such a depth that the pressure per unit of surface = 1, say 1 ton a square foot. In each case the span will be taken as equal to 80 ft., and the thickness of the gate, or distance between the skins, as 3 ft.

In the first example, that of the straight gate, the rise being $\frac{1}{10}$ of the span, or equal to 8 ft., the transverse strain in the centre of one leaf due to the pressure upon it will be 6·39 tons, either of compression or extension. Consequently, the section to be provided, allowing 4 tons to the square inch for compression, and 5 tons per inch for extension, must be

$$\frac{69\cdot3}{4} = 17\cdot3 \text{ sq. in. on the compressed side.}$$

$$\frac{69\cdot3}{5} = 13\cdot8 \quad \text{,,} \quad \text{extended side.}$$

In this case the tangent of the half angle at the vertex is 5; hence the compressive strain is twice and a half the distributed pressure on the other leaf, or $40\cdot78 \times 2\frac{1}{2} = 102$ tons. Then adding half of this, or 51, to the 69·3 representing the compression due to transverse strain, and deducting it from the same quantity, representing the extension due to the same strain, two quantities result, namely, $\left.\begin{matrix}120\cdot3\\18\cdot3\end{matrix}\right\}$ which divided respectively by $\left\{\begin{matrix}4\\5\end{matrix}\right.$ give $\left.\begin{matrix}30\cdot1\\3\cdot7\end{matrix}\right\}$ for the areas of the compressed and extended sides respectively, making in the aggregate 33·8 sq. in. centre section. It must be remarked that this assumption, that half the compression may be regarded as counteracting the extension on the inner or extended side of the gate, could not in all cases with prudence be acted upon, for in many instances the thickness of the plates would be reduced to an impracticable extent or so as to induce other inconveniences. It is a question whether the whole of the compressive strain may not at times be borne by the compressed section, and if so a much larger aggregate section than that stated above would be required, in fact it would entail an addition of nearly 70 per cent. The truth probably lies between the two. At the present time, that assumption is employed which is most favourable to the straight gate; and the wide difference in the results, according to the view taken, is stated as another illustration of the great importance of taking this

compressive strain into account, in calculating the section and consequently the weight required. The section just obtained is the centre or maximum section. Before a correct comparison can be made with the cylindrical gate, the mean section must be arrived at. To do this it must be recollected that at the ends, where in a girder, speaking theoretically, the section of the flanges is vanishing, a lock gate must always have section enough to resist this compressive strain, and so of every other section. Hence, if 102 tons be the compressive strain, and reckoning 4 tons per square inch, there must be 25·5 sq. in., which with a centre section of 33·8 will give a mean section of $\frac{33{\cdot}8 + 25{\cdot}5}{2} = 29{\cdot}6$ sq. in. This multiplied by the length 40·78 of the gate = 1207, which represents the quantity of material, or weight in the element, or portion under consideration.

In the cylindrical gate the mean section can be calculated from the compressive strain, which is equal to the pressure per unit of surface (in this case, as in the former, taken at 1 ton a square foot) multiplied by the radius of curvature. The radius of curvature for the arc of a circle whose height is 8 ft., and base or chord line 80 ft., is 104 ft., and reckoning 4 tons an inch for compression, the section required is $\frac{104}{4} = 26$ in., which is also the mean section. This multiplied by 41·02, the length of the arc representing one leaf = 1066, which represents the quantity of material or weight in the element of the leaf.

The quantities, therefore, stand thus;—

1207 in the straight gate,
1066 in the cylindrical gate,

the latter exhibiting a saving of more than 11½ per cent.

In this case the ratio of the height or the versed sine to the span is small, and is less favourable to the cylindrical gate than in the following examples. The calculation is given with some detail, that the mode of conducting it and the assumptions may be clearly understood; but as the same method has been followed in the succeeding cases, the results may be more summarily stated.

In the second example, in which the ratio of the height to the span is 1 to 6, the span being 80 ft., the height 13·3 ft., and the thickness of the gate, or the distance between the skins, 3 ft., there is in the straight gate a transverse strain in the middle of 74·06, and a compressive strain of 63·25, requiring a mean section of 25·35 sq. in., the compressive strain being supposed to be equally distributed in the two skins. Then 25·35 multiplied by 42·16, the length of the leaf, gives 1069, which represents the quantity of material as before. In the cylindrical gate, the radius of curvature being 66·66 ft., the mean section is 16·66 sq. in., which, multiplied by 42·89, the length of the arc, gives 715, representing the quantity of material. The quantities, therefore, are 1069 in the straight gate, and 715 in the cylindrical gate, the latter showing a saving of 33 per cent.

In the third example, in which the ratio of the height to the span is 1 to 4, as in the gates of the Victoria Docks, the span being 80 ft., the height 20 ft., and the thickness of the gate, as before, 3 ft.; there is in the straight gate a transverse strain in the middle of 83, and a compressive strain of 44·7, requiring a mean section of 24·8 sq. in., which, multiplied by 44·7 the length of the leaf, gives 1117 to represent the quantity of material. In the cylindrical gate the radius of curvature being 50 ft., the mean section is 12·5 sq. in., which, multiplied by 46·36, the length of the arc, gives 580 to represent the quantity of material. The quantities, therefore, are 1117 in the straight gate, and 580 in the cylindrical gate, exhibiting a saving of 48 per cent.

The following Table contains several additional examples, and exhibits a tolerably complete comparison of the quantities under the two points of view, through a progressive change in the ratios from 1 to 10, 1 to 9, and so on, to 1 to 2·66.

Ratio Rise to Span.	Vertical Angle.	Transverse Strain in the Centre.	Compressive Strain due to Opposite Leaf.	Straight Gate.		Cylindrical Gate.	
				Mean Section.	Quantity of Material.	Mean Section.	Quantity of Material.
	° ′						
1 to 10	157 22	69·32	102	29·6	1207	26	1066
,, 9	154 58	69·94	92·3	28·4	1164	23·6	975
,, 8	151 26	70·82	82·5	27·25	1123	21·25	885
,, 7	148 10	72·08	72·9	26·25	1092	19	801
,, 6	143 8	74·06	63·3	25·3	1069	16·66	715
,, 5	136 24	77·32	53·8	24·8	1011	14·5	640
,, 4	126 52	83·33	44·7	24·9	1117	12·5	580
,, 3	112 38	96·27	36	26	1250	10·8	552
,, 2·66	106 16	104·15	33·3	28	1400	10·4	558

It also shows that this quantity reaches its minimum value in the straight gate when the vertical angle is about 136°, and in the cylindrical gate when the angle is about 112°, corresponding to the ratio of 1 to 3. A still more important fact is, that the absolute minima in the two cases differ so considerably that, if the quantity in the straight gate at that limit be represented by unity, the quantity in the cylindrical gate, at its minimum, descends to one-half or thereabout.

It is to be observed that, in calculating the mean section of the straight gate, no allowance has been made for loss of area by rivet-holes on the extended side, and since, in order to ensure the close fitting of the plates to render the gates water-tight, the rivets must be placed closer together than in ordinary girder-work, a larger provision for cover plates should be made than is usual, the

difference, whatever it amounts to, being wholly in favour of the cylindrical gate. Again, the horizontal diaphragms, which correspond to the middle web in a girder, form a large percentage of the entire weight of the gates, amounting to 17 per cent. of the gates of the Victoria Docks. In the case of the straight gate, considered as a girder, it is the practice to neglect the middle web in calculating the sections; but in that of the cylindrical gate, where the strain is compressive, the area of the horizontal diaphragms is clearly admissible, and results in a large advantage if properly constructed with a view to this duty. Some advantage might also be claimed for the arched form of the skin plates in resisting pressure, as compared with perfectly flat plates; but as the determination of the strain on the latter due to this is not a simple problem, it will suffice to draw attention to the circumstance in general terms.

In the course of the foregoing description of the gates of the Victoria Docks, allusion has been incidentally made to another practical advantage of this form in affording greater facility for removing the roller, in consequence of its external position. In a straight gate this would not be so conveniently effected, because its proper position is under the gate, and its diameter would also be thereby somewhat restricted; while, on the other hand, the straight gate possesses the advantage of permitting a longer shaft to be made use of.

But a still greater practical advantage, and, next to the saving of material, the most important one arising out of the cylindrical form, is the uniform thickness of plates in the same horizontal section. This, of course, is in consequence of the uniform compressive strain on the radial section. If the comparison were between two girders only, one having plates thicker in the middle than at the ends, and the other with a uniform thickness throughout the length, there would not be so much to remark upon it. It is true that in the case of the girder with bottom or top plates of unequal thickness, good workmanship requires the insertion of packing strips to ensure the even bedding of the angle-irons, but in lock gates the skins and diaphragms have to be put together so as to be water-tight, and every joint has for this purpose to be covered with strips and to be calked. Practical men well know how difficult it is to accomplish this when plates of different thicknesses come together. As the pressure upon the gate and, consequently, the section required, diminishes from the bottom upwards, the plates are necessarily reduced in thickness in a vertical direction, but they remain constant in the same horizontal plane when disposed in the manner shown in the caisson. Hence the difficulty alluded to has to be contended with in one direction only, and can be effectually overcome. But in straight gates it becomes serious, and is further complicated with the cover plates on the extended side, which would be converted into a species of very wide covering strips running in a vertical direction up the gate, and by their thickness unduly adding to the weight and to the risk of imperfect jointing.

It must not, however, be concluded that the inconveniences of the cylindrical mode of construction have been lost sight of. No doubt the curved work entails additional cost in the manufacture, and should only be entrusted to contractors of experience and reputation. It also to a certain, but not to a large extent, diminishes the surface of heel-post in contact with the hollow quoin. It likewise, from the curved form and depth of the gate-recess in the side walls, somewhat breaks the quay line, and, where the curvature is considerable, renders the application of fenders desirable to prevent the concave side of the opened gates from being run into. Most of these are, after all, insignificant objections. The first, the cost of workmanship, is more than abundantly covered, by the great saving in material shown by even the most unfavourable example.

The Tyne Docks at South Shields.—The account that we give of these important docks is taken from a paper by T. E. Harrison, given in the Minutes of the Proceedings of the I. C. E., 3rd May, 1859.

The docks are constructed on the banks of the river Tyne, at the upper end of South Shields, on a large area called Jarrow Slake, which is covered with water at spring tides to a depth of from 5 ft. to 8 ft., Fig. 2484. The whole area of this slake, so covered, was about 350 acres, and of this quantity, 179 acres are now enclosed by the works of the docks.

The area of water in the dock, as executed, is 50 acres, the depth of the water being 24 ft. 6 in. at an average spring tide. The entrance basin is 9½ acres in extent, with a depth of water of 25 ft. for a width of 200 ft. in the centre of the channel, gradually shoaling to the sides. There is one entrance 80 ft. in width in the clear, and there is a lock 300 ft. long by 100 ft. wide, with gates 60 ft. in width in the clear; the sills in each case are laid 24 ft. 6 in. below high water of an average spring tide; such spring tides having a lift of 14 ft. 6 in. Figs. 2485, 2486, and Figs. 2489 to 2493, show these arrangements, and also sections of the locks. From accurate observations taken at each tide for two years, it appears that there would only be sixteen days in the year in which a vessel, drawing 20 ft. of water, could not go out.

The contract for the execution of the whole of the works, as designed by T. E. Harrison, the engineer-in-chief, was let to James Gow in June, 1855. The works were commenced in July, 1855. The foundation-stone of the masonry of the locks was laid in September, 1856; and the water was let into the docks in December, 1858. The first vessel entered in January, 1859, and the docks were formally opened for general traffic on the 3rd of March, 1859. The works were executed under the immediate superintendence of Robert Hodgson, resident engineer.

The total quantity of excavation in the docks was 1,783,452 cub. yds., and in forming the standage ground 281,305 cub. yds. The total quantity of masonry of all descriptions was 2,900,000 cub. ft. The whole cost of the works up to the date of the opening for public traffic was 440,479*l.* 9*s.* 8*d.* This sum included all the standage and railway approaches, the shipping jetties, the purchase of land, and all the dock works, but it excluded parliamentary and other charges, exclusive of engineering.

The first point of engineering interest is the nature of the foundations. A series of careful borings showed that though there was in places a very strong stony clay resting on the coal-measures, yet that this clay was only partial, and that it dipped suddenly away. Within a few yards of the clay bed, borings were made to a depth in some places of 70 ft. and upwards, through

the mud or slake deposit, without reaching a solid bottom, showing that not only the clay but the coal-measures were gone.

The first operation in the construction of the works was to form a large culvert, 5 ft. in diameter, round the head of the works. This served to keep the works clear of upland water during their execution, and will permanently carry off all the land waters. The bank F G H, Fig. 2484, was then formed, and a small portion of the upper end of the slake was thus enclosed. With the material excavated from this portion of the work, which was partly clay and partly slake, and also with the clay excavated in forming the standage ground above, the bank I K L was formed to meet the dam M N run out from the alkali-works. This dam had also a temporary timber jetty, fitted with steam-cranes, and lines of railway on it, to enable the Jarrow Chemical Company to carry on their works during the construction of the docks. After these dams were completed, the water was run off by sluices, and no difficulty was experienced from water during the execution of the works.

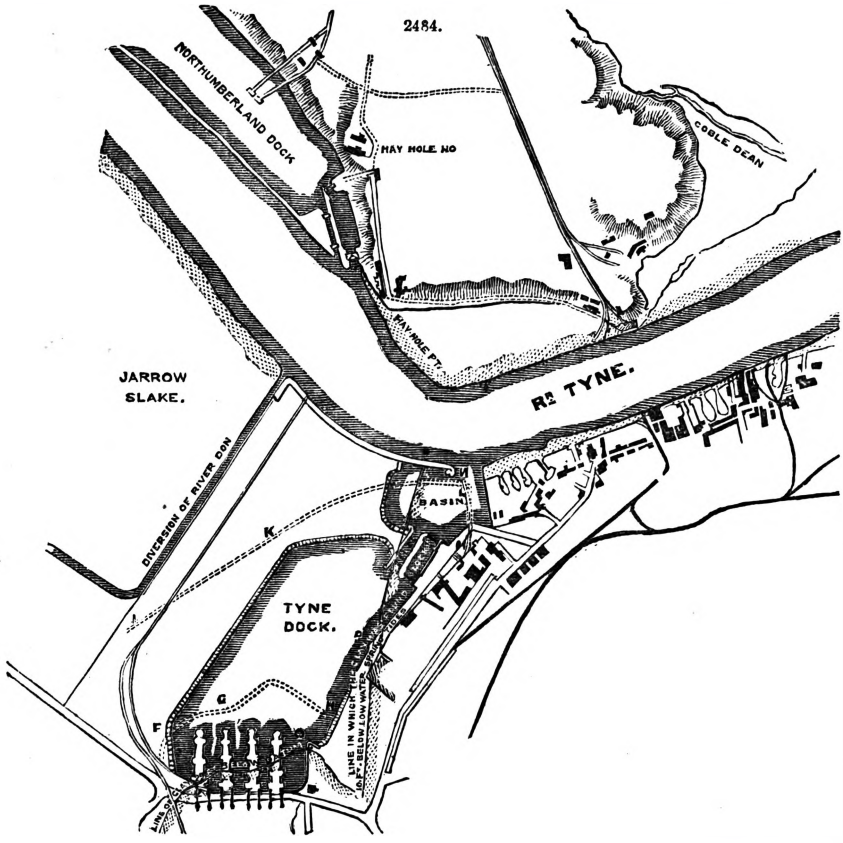

Shortly after the first course of masonry of the foundations was laid for the north or 60 ft. lock, Fig. 2486, the floor was observed to rise 3 in. very regularly, and forming a point. A bore-hole was put down, and on touching the stone head through 7 ft. of hard clay, a strong feeder of water came away. A pipe was put into the hole, and the water rose in it 13 ft. above the level of the foundation, rising and falling about 9 in. with the tide. The height to which the water rose was about the level of low water in the river, and it was clear no permanent injury could result when the works were completed. The bore-hole was, therefore, kept open, and similar holes were made in other places, and allowed to remain open during the progress of the works, being only closed up a short time before the water was let into the docks. The flooring of the lock went back partially after the hole had been opened some days. It was then heavily weighted with stone, and nearly restored to its original level. The masonry was built on the flooring originally laid, very few stones being taken out; and it has since shown no sign of settlement.

It was proposed to build a quay wall from P to O, Fig. 2484, opposite to the alkali manufactory. There being no clay at this part, it was intended to have built the wall on a strong foundation of piles, driven down to the stone head. But in forming the excavation to put in this foundation of piling, it was found that the slake would not bear the weight of the bank behind it, unless at a slope of 1 to 5. As so flat a slope was inadmissible, the plan adopted for overcoming the difficulty was by weighting the top with gravel, easily obtained from the old ballast hills at South Shields. The toe of the slope was thus forced out, and it was not an unusual thing to see the whole of the rails and wagons on the top gradually sink 10 or 12 ft. in a quarter of an hour; the toe of the slope at the same time rising and turning over rails and wagons in all directions. It was not until 150,000 tons of gravel had been deposited that the whole came to a state of rest. The slope is at present 1¼ to 1. It is pitched with stone, and rests at the bottom on a strong row of piles. It can now be easily rendered available for quay purposes by the aid of timber when required.

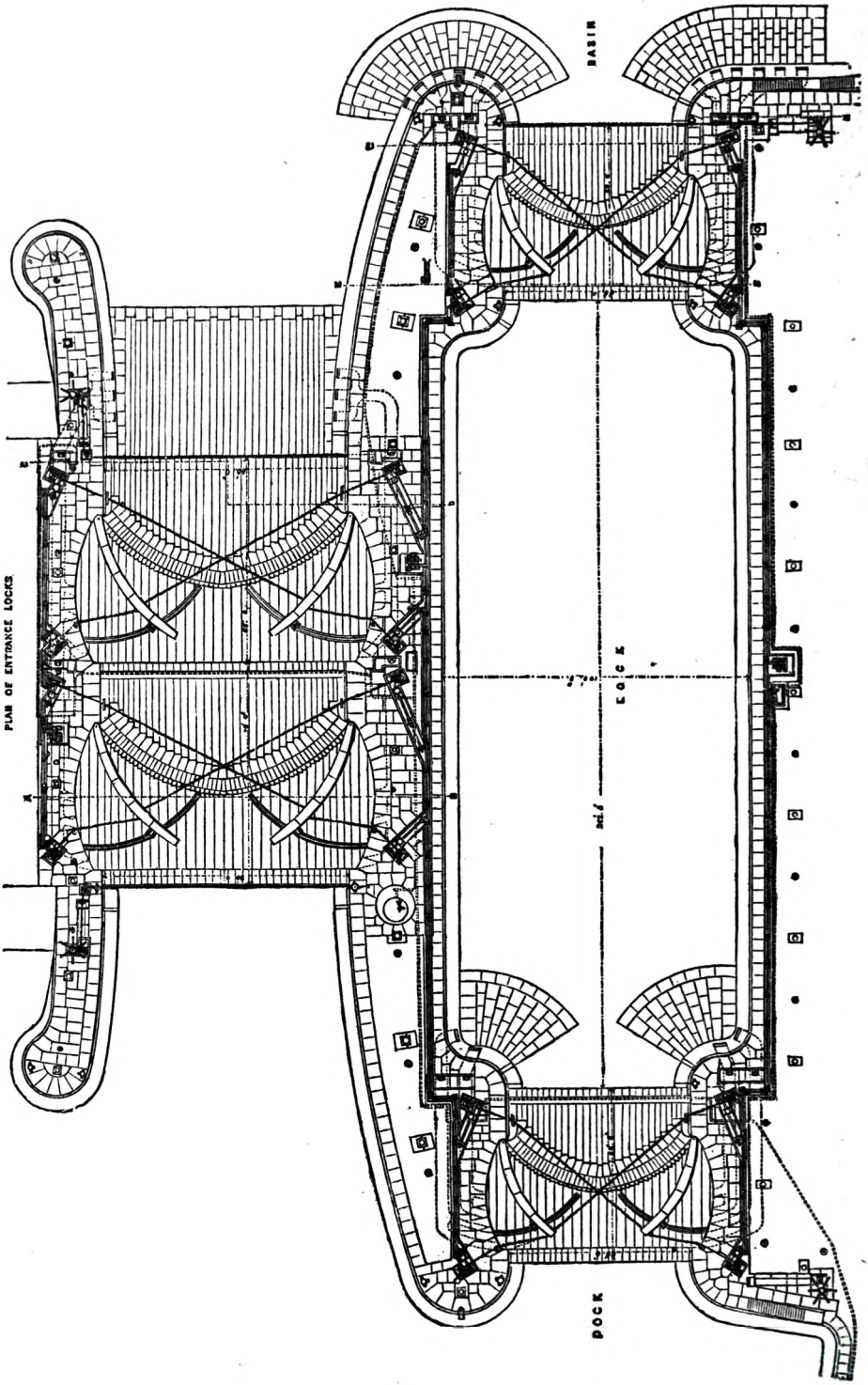

2435. PLAN OF ENTRANCE LOCKS

2486.

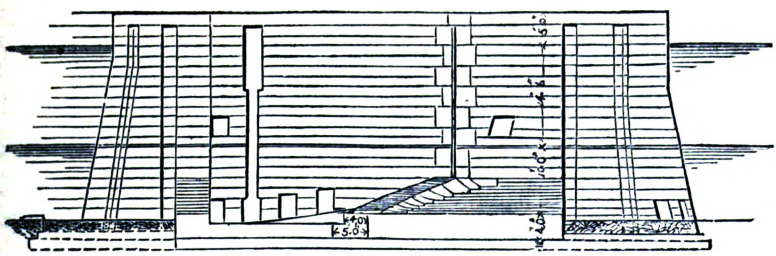

Longitudinal Section through centre of 60 ft. Lock.

2487.

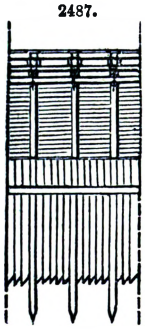

2488.

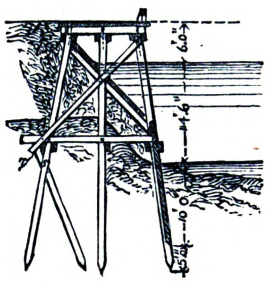

Elevation and Cross-section of River Don Timber Wall, I K.

The extent to which the dock is walled is shown on the plan, Fig. 2484. The foundations of these walls rest in all cases on clay. The other sides or boundaries of the dock are of mud or slake with a slope of 1 in 5, partially pitched with stone. The mud or slake forms a good puddle, and can be worked very readily in dry weather. Fortunately the weather was remarkably fine during nearly the whole time of the execution of the works; had it been otherwise, the completion of the works would have been much delayed, and the contractor would have been put to additional cost, as a few days' continu ance of wet weather sufficed to stop the work of excavation.

Several of the timber jetties for the shipment of coals are founded on this mud or slake. Experiments as to the bearing capacity of the slake were made by putting on the surface a bed of concrete 10 ft. square, and gradually loading it with iron. The result was, that with a load of 7 cwt. to the superficial foot no settlement took place; but as soon as that weight was exceeded the whole began to sink. The foundations of the jetties were, therefore, laid on a wide-spread base of concrete with timber sills, care being taken not to exceed a pressure of 5 cwt. to the superficial foot.

The position in which the entrance to the tidal basin is placed with reference to the course of the river, deserves attention. The river wall, which is constructed of creosoted timber, forms a curve of 2135 ft. radius. Plans, sections, and elevations of this wall are given in Figs. 2494 to 2498. Immediately below the entrance there was a bed of hard clay running out into the river. This has been entirely removed by dredging, and the flood and ebb tide now take their course as nearly as possible over the same channel, guided by the concave river wall, thus always ensuring a full depth of water opposite the entrance. In the case of the Northumberland Docks, which are on the opposite convex shore of the river, constant dredging is requisite to maintain the necessary depth of water at the entrance.

The dock gates, Figs. 2499 to 2509, may be noticed very briefly, as they are built on the model generally of those of the Victoria (London) Docks, which have been already described. The only point of difference is that the Tyne Dock gates are curved at the bottom, both on plan and in section, the pivot for the heel-post being raised 3 ft. 6 in. above the level of the sill, Fig. 2506. This mode of constructing the lock has its advantages, as by placing the pivot so high, there is less danger of anything lodging behind the heel-post. The construction of the invert of the lock is likewise very strong, as it is carried directly through from the end of the pointing sills. It has also its disadvantages, as it involves the necessity for some large and rather intricate masonry; but in this case there was every facility for executing any description of stonework. Some little trouble also arises in fitting accurately the doubly-curved wood sills to the doubly-curved masonry; but this was successfully accomplished, and the sills are perfectly tight. The alteration suggested by Kingsbury, in the mode of fixing the heel and mitre posts, is an improvement; as some little difficulty was experienced in making the gates water-tight at these points to ensure flotation. As soon as the gates were sufficiently advanced, they were

2489.

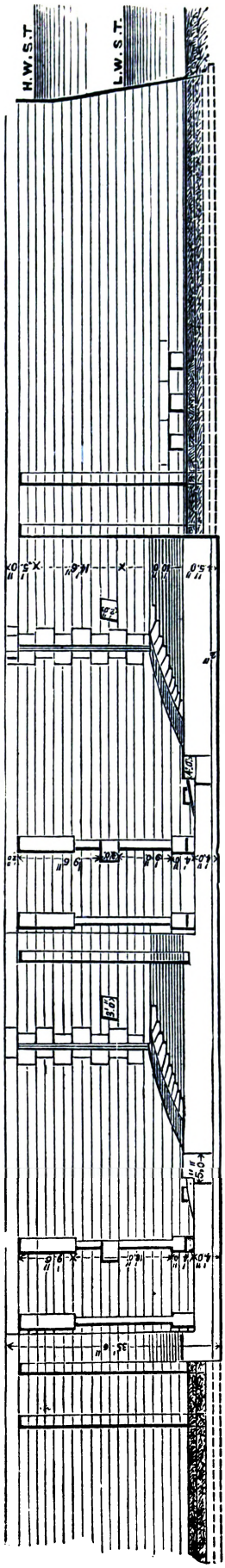

Longitudinal Section through centre of 80 ft. Lock.

their flotation, the weight on the rollers may be adjusted at pleasure. Instances are not wanting in gates with a large proportion of cast iron in them, where the rollers had to be renewed within a few years, owing to the great weight on the rollers, and the consequent rapid destruction of them. The expense of these renewals has often been very serious.

The sluices are all made to work with brass against brass. The sluices at Hartlepool were so constructed by Rennie, and on examination a short time ago they were found to be perfect. On the other hand, the sluices at the Monkwearmouth Dock, where brass worked on iron, were completely destroyed after being in use about eighteen years.

2490.

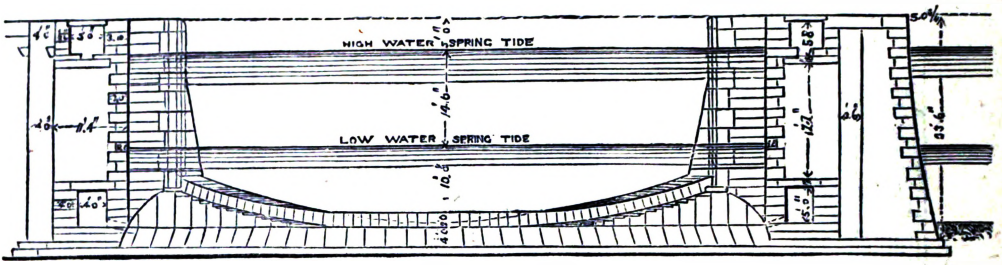

Cross-section A B

2491.

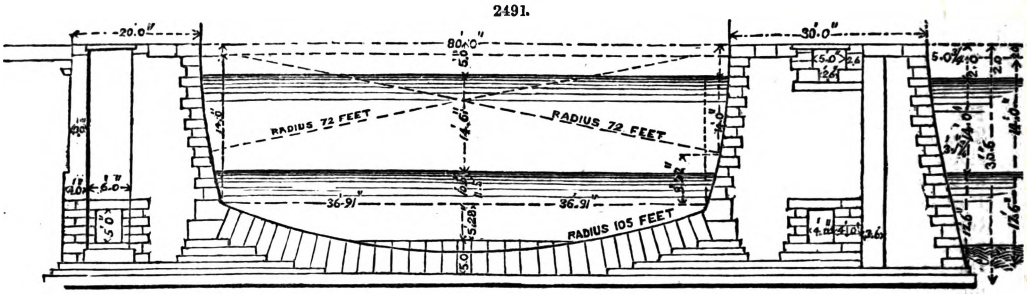

Cross-section C D.

2492.

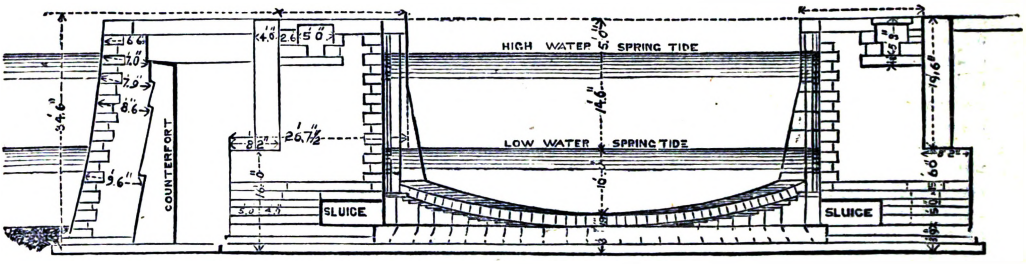

Cross-section E F.

2493.

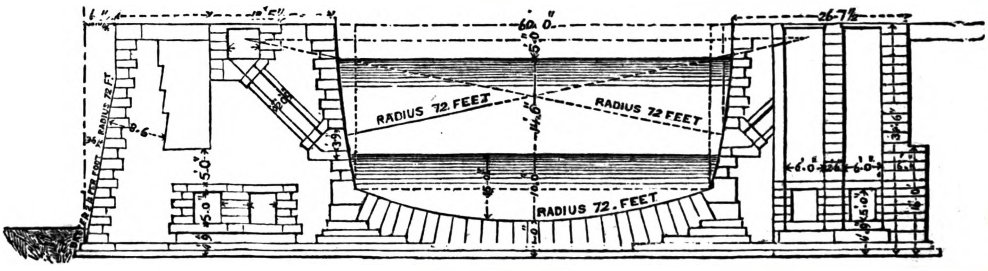

Cross-section G H.

The dock gates and sluices are arranged to be worked either by hand or by hydraulic power. Where hydraulic power is used for dock gates or for sluices, it is essential to have the power of working by hand when required; and circumstances have already arisen showing the necessity for the occasional use of hand-power.

As a large quantity of muriatic acid was constantly discharged from the alkali-works during

the construction of the docks, the tidal water was allowed to flow in a canal as far up the face of the alkali-works as the point where the acid was discharged. In order to provide for the permanent discharge of this acid, a large tank capable of holding 10,000 gallons of water, formed of creosoted timber, has been constructed at the end of the discharge pipes from the works. From

2495.

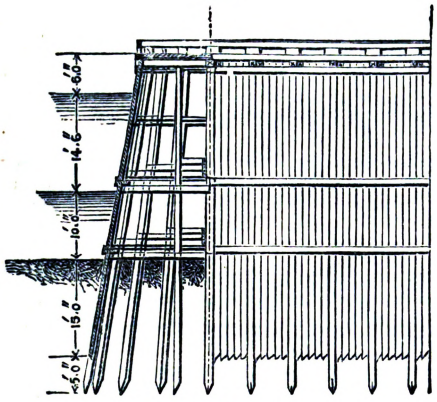

Section and Elevation of Pier End.

2496.

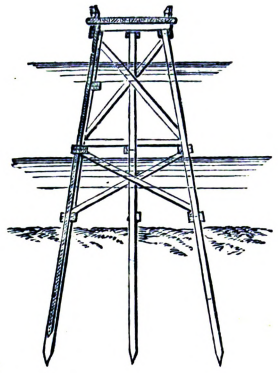

Cross-section N O.

2494.

River Don Timber Wall.

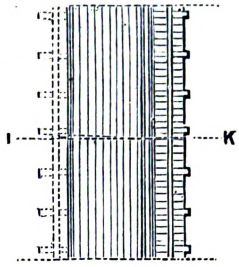

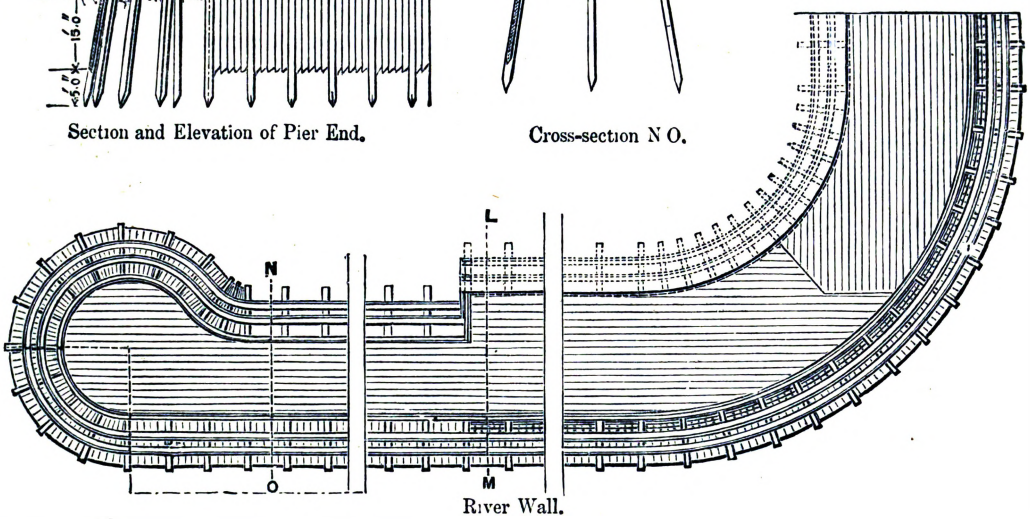

River Wall.

this tank, fireclay pipes boiled in creosote are laid to the edge of the quay of the dock basin, and from thence to the point of discharge, 2 ft. below the level of low water in the bed of the river, square boxes of carefully-creosoted timber are laid. Many experiments were made during the progress of the works to ascertain what would best resist the destructive action of the muriatic acid, and nothing was found to be more successful than the plan adopted. The acid being now discharged on the ebb tide, is carried away in so diluted a state as not to produce any injurious effects.

A branch line of railway is laid down to the level of the dock quay, and all round the docks, in order to afford facilities for any description of traffic.

The primary object of the construction of the Tyne Docks was to provide accommodation for the shipment of the large quantity of coals brought to South Shields from the coal-fields of Durham and Northumberland.

2497.

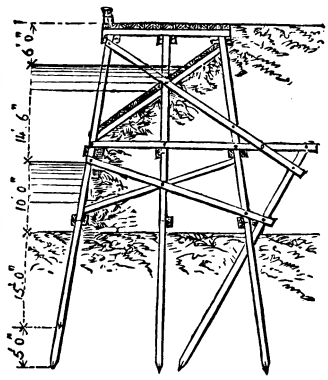

Cross-section L M.

2498.

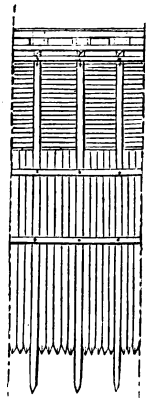

Elevation of River Wall.

The coal trade of the northern coal-fields has been gradually increasing for many years past. The quantity of coals shipped in the river Tyne in the year 1858 amounted to 4,181,000 tons; of this amount, 1,203,524 tons, or nearly 29 per cent., were shipped by the North-Eastern Railway Company at South Shields. The total quantity of coals shipped at all the north-eastern ports in the year 1858, between the Blyth and the Tees, was 9,899,600 tons; of this amount, 3,005,785 tons, or rather more than 30 per cent., were shipped at Shields, Sunderland, and Hartlepool, by the North-Eastern Railway Company. The facilities for shipping at South Shields at the command of the North-Eastern Railway Company, have for some time been so limited, that it has been necessary to work

night and day throughout the whole year; and even then the requirements of the trade could not be satisfied.

As the method of shipping coals has undergone many changes during the last forty-seven years, it may not be uninteresting to give a brief account of the various modifications which have been made.

For many years on the Wear, and in those cases on the Tyne in which the vessels could not be loaded direct from the colliery railway, the coals were brought down to the edge of the river in wagons, and there put into keels, which were broad, flat-bottomed barges, each containing a keel of coals, or 8 Newcastle chaldrons, or 21 tons 4 cwt.

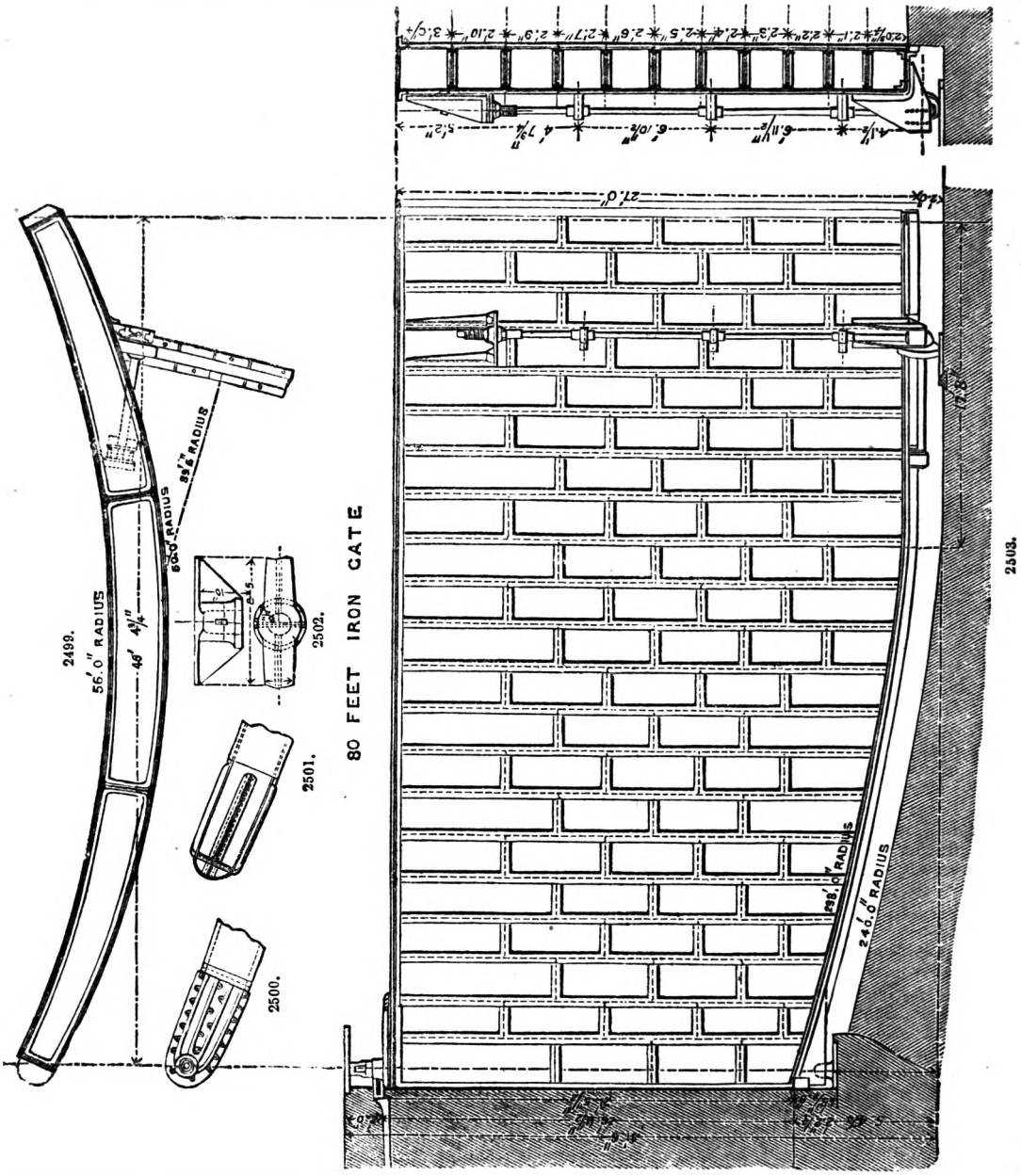

On the river Tyne there were many collieries having communication by railways to shipping places where vessels could load, as in the case of the Walls-End Colliery. The mode of shipment was by spouts, in their general principles similar to those adopted at the Tyne Docks; but without, for a long time, any arrangement for meeting the difference in the level of the tide and in the size of the vessel. When keels were used, the coals were brought down in them to where the vessel lay in the river; and they were then cast into the vessel, through the port-hole, by the keelmen. This system still exists, to a limited extent on both rivers, in the case of those collieries not having the

means of direct railway communication to a place of shipment. When in full operation, before the general introduction of railways, this system gave employment to a remarkably fine body of men known as keelmen.

The first innovation on the spout system took place in the year 1812, when a coal-drop was erected at Pelaw Main Spout, on the river Tyne, by Benjamin Thompson, and further improved by him in 1813. The principle of this mode of shipping coals had been previously patented by William Chapman, of Newcastle. The drops, as erected by him in 1813, have been generally followed, with various modifications. The principle of all these drops is, that the loaded wagon in its descent raises a counterbalance weight, and when the coals are let out of the wagon, the counterbalance weight brings the wagon back to its previous position, the whole being under the control of powerful brakes.

2504.

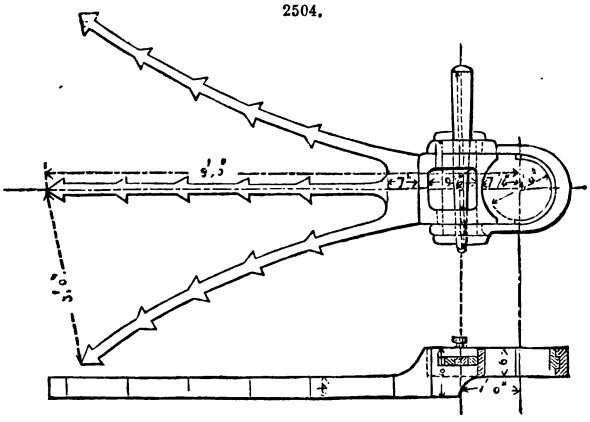

2505.

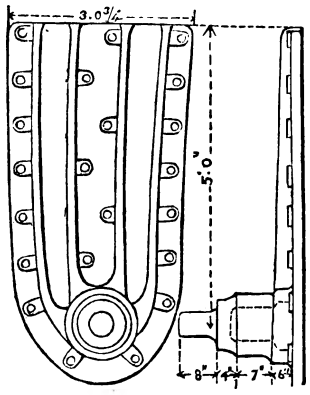

2506.

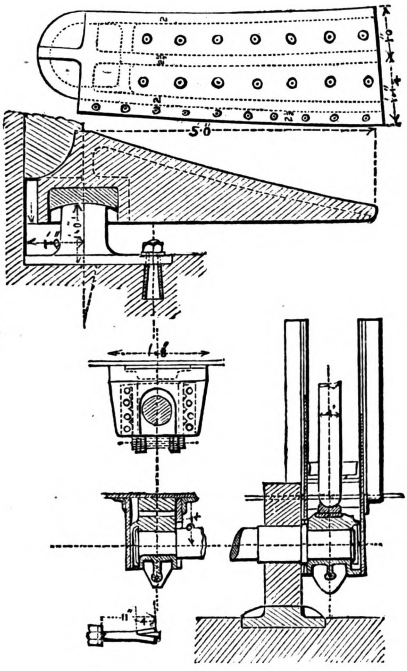

2507.

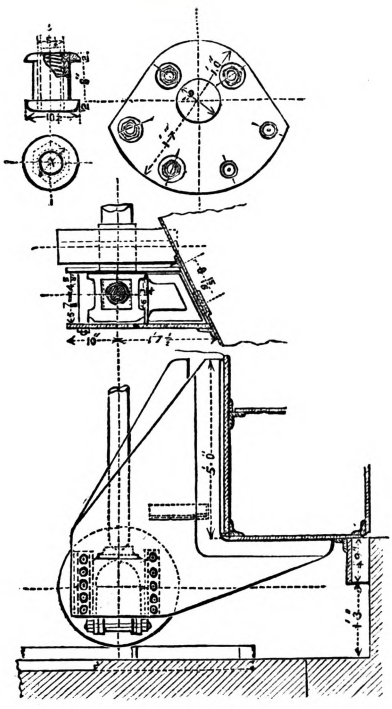

2509.

2508.

The first change on the keel system took place on the river Wear in the year 1817, when, in order to avoid the breakage to which the coals were subject by transhipment first to the keel and then from the keel to the ship, a system of tubs fitted into the keels was invented by William Bell. The chaldron wagons were lowered immediately over the keel, and then dropped into the tubs. The tubs were then conveyed in the keels to Sunderland, and transferred by the machinery to the vessel. This system of machinery was invented and constructed by Burlinson, of Sunderland, in the year 1817, who also, in 1825, erected the machinery which is still at work at Sunderland.

William Chapman also invented a floating barge, which was fitted with a steam-engine and

machinery, by which the tubs were transferred from the keel to the ship. This was used for some time, but it was found to be very unwieldy, and was therefore superseded by the fixed machinery on land.

In determining the system to be adopted in the Tyne Docks, the question lay between drops, by which the wagon would be lowered directly on to the deck of the vessel, and a system of spouts, with more perfect appliances for preventing the breakage of the coals. After mature deliberation, watching carefully the best-constructed spouts, and considering not only what existed but what might be done, it was decided to adopt the system of shipping by spouts.

The variation in the level of the deck of a large American ship when light, and at high water of a spring tide, and in the level of the deck of a small vessel loaded at a neap tide, is 20 ft., and it was necessary to provide for this difference. See KEELS AND COAL SHIPPING.

Figs. 2510 to 2513 illustrate *G. B. Rennie's Iron Floating Dock*, constructed for the port of Ferrol on the Atlantic. Such docks serve the same purpose as the ordinary graving docks.

The total length of this dock, Fig. 2510, is 350 ft.; the breadth of the base 105; the height from the floor to the deck of the side walls 37 ft. 6 in. Thus, allowing 5 ft. for the keel-blocks, and 2 ft. 6 in. between the top and the highest water-level, there remains 30 ft. depth of water for the admission of ships. The total displacement of water by the base is 13,000 tons, the weight of the whole dock about 5000, thus leaving a surplus of 8000 tons for lift. The dock is constructed in the following manner;—The section shown in Fig. 2510 is that of the whole length of a dock, and is composed of plate, angle, and T iron, riveted together so as to form one structure. The base or pontoon of the above is 12 ft. 6 in. deep, divided into two compartments by a water-tight bulk-head running the whole length of the dock. Each of these is subdivided into smaller compartments by ten transverse bulk-heads, forming eleven water-tight chambers on each side, Figs. 2511, 2512. The side walls are also divided by a similar number of transverse bulk-heads. The upper part of the side walls is composed of air-tight chambers of a capacity rather exceeding a volume of water whose weight is equivalent to that of the dock. These serve the purpose of preventing the dock sinking below a certain level. The base is again divided and strengthened by open lattice girders of an I form, of a length equal to the breadth, and depth equal to the depth of the base or pontoon. They are about 5 ft. apart. On commencing the work, two of these girders were tested with a weight of 200 tons without any perceptible deflection. The base is further strengthened longitudinally by a system of diagonal bracing. There are thus, including the outside plating, nine elements of strength in a longitudinal direction in order to distribute any inequality of weight that may occur through irregularity in the keel or weight of the ship. The floor of the dock, Fig. 2513, is covered with 3-in. teak planking, upon which, supported by every third girder, is a solid teak beam of 2 ft. square running from side to side. These beams support the keel-blocks and movable bilge blocking-pieces, with rack and pawl. On the middle of the intermediate girders the ordinary keel-blocks are fixed.

The Arrangement for Sinking, Filling, and Pumping out.—On either side of the dock, near the centre at the bottom, are two large sluices. These admit the water into a small reservoir or distributing chamber, from which wrought-iron pipes 1 ft. 6 in. diameter lead, one to each compartment. These pipes have sluices or cocks fitted to them, which are worked by hand from the top of the dock, so as to be always available and capable of regulation by the man in charge. The depth of water in each compartment is determined by an ordinary gauge. Four pumps are placed on each side, having 2 ft. 9 in. stroke, and 26 in. in diameter, and worked by a pair of high-pressure steam-engines, with cylinders of 18 in. diameter and 2 ft. stroke of piston. The pumps are reduced in speed in the proportion of 2 : 1 by means of gearing. Four powerful capstans and mooring bollards are fixed at each end of the dock for moving or mooring it *ad libitum*.

The dock is worked as follows;—Suppose it empty, and the floor well above the level of the water, the sluices at the side are gradually opened, and water allowed to flow into the different compartments. The dock will then commence sinking, care being taken by watching the gauges so to regulate the supply of water that it may sink uniformly and gradually. When the dock is sufficiently deep to take in the required vessel the sluices are closed, the vessel hauled over the keel-blocks, and the breast and other shores applied, while the engines are set to work to pump the water out. Thus for every ton of water pumped out 1 ton of dock and ship is lifted. This operation is continued until the floor of the dock is well out of the water, as shown in Fig. 2511. Painting, examination, or repairs, can then be performed with facility. The manifest advantages of this arrangement are;—First, the adaptation of breast shores, which those accustomed to docking large vessels well know the importance of, for steadying ships when they begin to rest on the keel-blocks. Secondly, the longitudinal stiffness obtained by the side walls, so that any undue pressure arising from irregularity in the keel of the vessel is thereby counteracted, the height of keel-blocks being regulated as usual by wedging up. Thirdly, the facility of moving the dock should it be required. Fourthly, the simplicity of the action of the dock, and its non-liability of getting out of order. Fifthly, entire independence of the rise and fall of the tide, and thus readiness for docking or undocking at any moment. Suppose, for instance, either from action in battle, or derangement of the sea-cocks, or of a hawser round the screw, ships run into Spithead, Portland, or Plymouth, to be docked, and have to wait for the tides as usual, serious inconvenience might result; whereas if a floating dock were fixed at any of the above-named or other ports, they would run in, and not be required to discharge stores or cargo, and in two or three hours be in a position for examination; and from the now universal introduction of steam for ships, these slight derangements, which can be often remedied in an hour or so, not unfrequently occur. Should, however, it be found that a repair of some weeks or so would be required for the vessel, the dock being thus in use would not be available as above described. To remedy this, Rennie contrived a floating basin and a railway for Carthagena. It is designed for the especial purpose of hauling the dock with the vessel upon it into the basin, and conveying the vessel from the dock on to a horizontal slip or way, and thus leaving the dock available for other vessels.

2511.

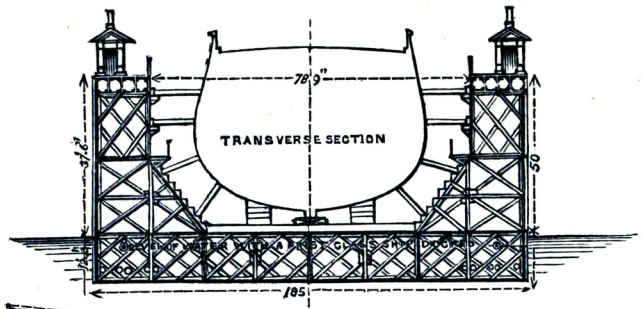

2512.

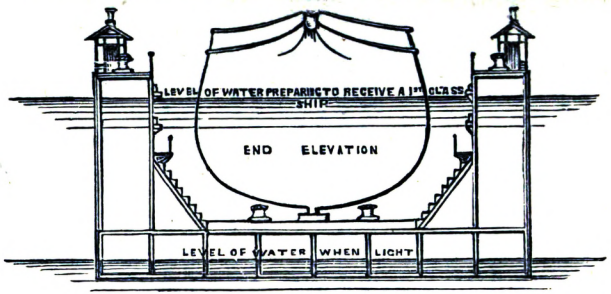

2510.

LONGITUDINAL SECTION

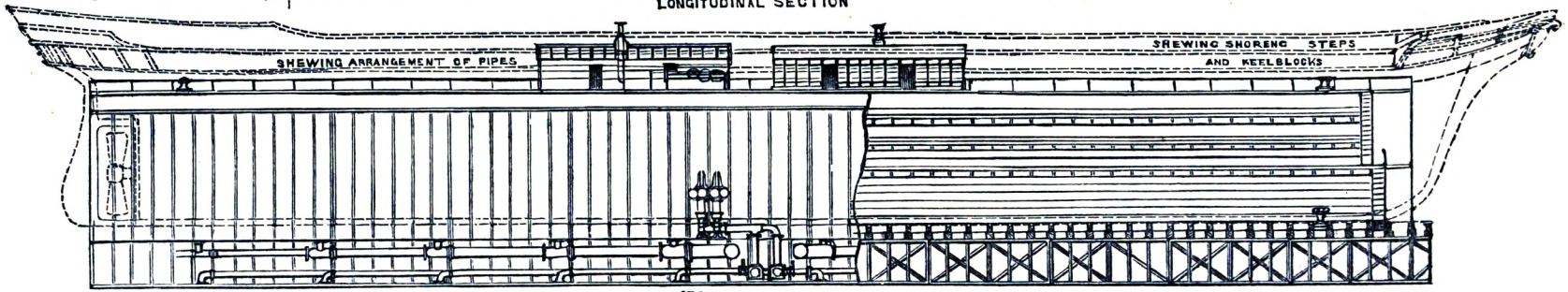

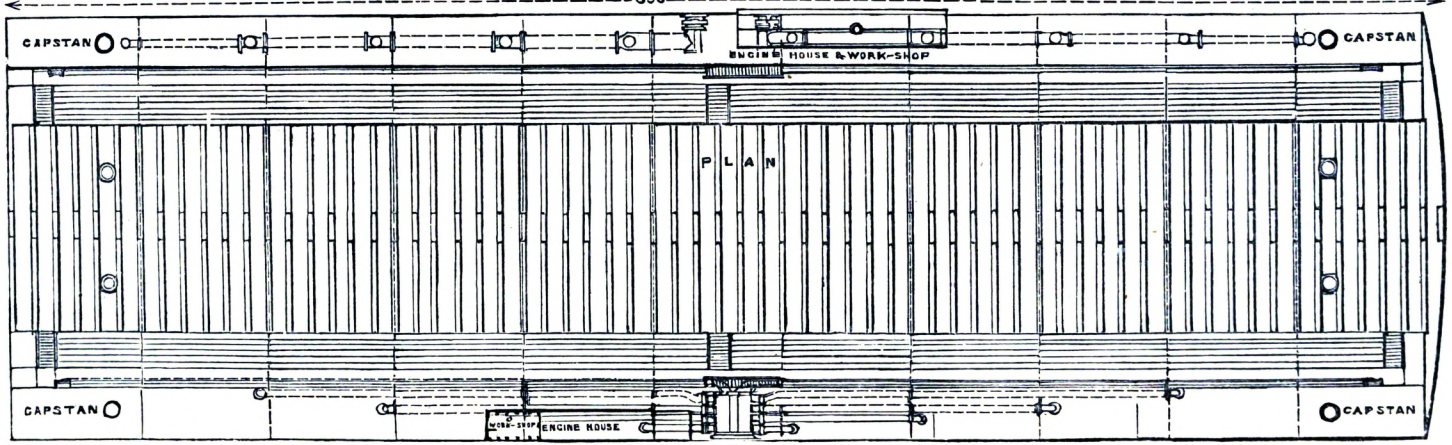

2513.

An iron floating dock for Bermuda has been recently constructed by Campbell, Johnstone, and Co., of North Woolwich. This dock is capable of docking ships of the Bellerophon class when waterlogged; it is fitted with a caisson at each end, and has a double bottom and sides 20 ft. apart. The principal dimensions are as follows;—

	Feet.
Length over all	381
Length between caissons	330
Breadth over all	124
Breadth inside of dock	84
Depth over all	72

It is divided longitudinally into eight water-tight compartments on each side of the keel, and each of these is again divided into three smaller compartments, not water-tight. Transversely it is divided into three compartments on each side of the keel, called, respectively, the load-chamber, balance-chamber, and air-chamber; these chambers being water-tight and distinct from each other, Fig. 2514.

The dock, when not in use, has its chambers empty, with the exception of the air-chambers, in which a quantity of water is always kept for supplying the pumps to fill the load-chambers when required.

The process of docking a vessel may be described thus;—The load-chambers are first filled by pumping engines fitted on the top of the dock, and having suction-pipes leading into the air-chambers. After this has been done, the valves fitted at the lower part of the balance-chamber and communicating with the sea are opened, and the chambers filled, this operation sinking the dock to such a depth that, by opening valves fitted through the caissons, water can be run into the dock in order to bring the contained water to the same level as the water on the outside, when the caissons can be taken out, and there will be a depth of 27 ft. of water on the blocks, Fig. 2514.

2514.

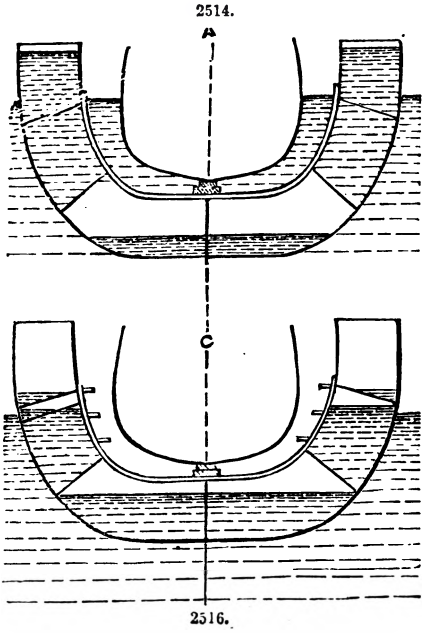

2516.

2515.

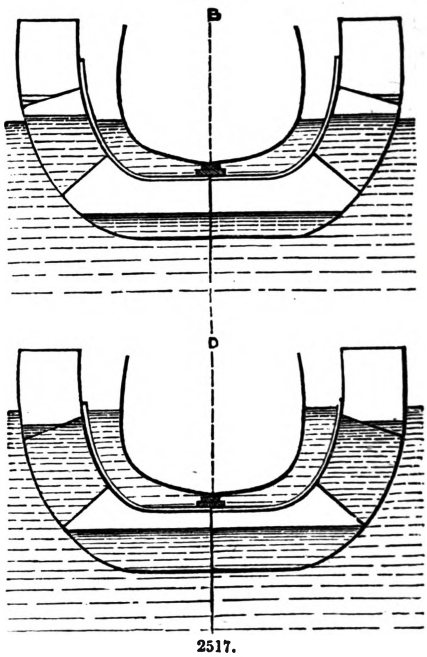

2517.

2518.

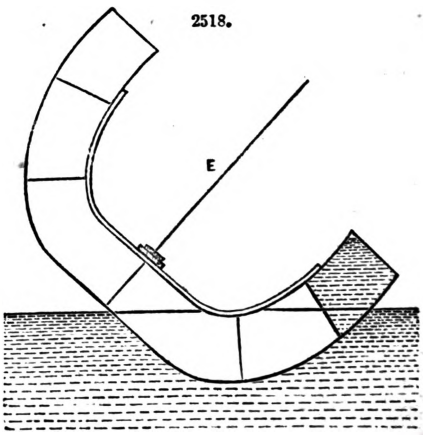

The ship having been brought over the blocks, the water in the load-chambers is allowed to run out, and the balance-chambers partly emptied, if required, Fig. 2515; the ship is now breast-shored, and the caissons put in place, after which the water remaining in the dock is run into the air-chambers, as shown at Fig. 2516, by means of valves fitted in the bottom of the dock, in which state the dock remains until the vessel is ready for undocking. Should the vessel not be exactly in the centre of the blocks, the dock is brought perpendicular by letting a portion of the water out of the balance-chamber on one side or the other, as the case may require.

To undock the vessel, water is run into the dock through the valves in the caissons, and the balance-chambers filled up, this bringing the dock into the position shown in Fig. 2517, with the ship afloat; the caissons are then taken out, when the vessel may be undocked. To bring the dock again ready for use the water in the air-chambers is pumped into the load-chambers and run into the sea, in order to allow the dock to be emptied into the air-chamber. Fig. 2518 shows the dock heeled over, in order to clear or repair the bottom.

In docking small vessels the dock has sufficient buoyancy to lift them quite out of the water, when the caissons would not be required. The inventor also proposes to make pontoons capable of carrying light vessels to fit the inside of the dock; these pontoons he sinks in the dock, and after bringing the vessel over it, the dock is raised and the water let out of the pontoon, when the dock is again sunk, leaving the pontoon afloat with the vessel on it; by these means a number of ships, corresponding to that of the pontoons provided, might be repaired at the same time.

Edwin Clark's Hydraulic-lift Dock, Figs. 2519 to 2523.—Clark, under the direction of Robert Stephenson, designed the machinery, and superintended the raising of the tubes of the Britannia and Conway tubular bridges; and it required but trifling ingenuity to apply the process employed to raise those tubes to the lifting and docking of vessels.

The site selected for one of those hydraulic-lift docks was a plot of 26 acres of level land, lying between the Victoria Docks and the Thames, and below the level of high water. This site admitted of a direct entrance from the docks, with a permanent water-level, without the cost and delay of a special entrance from the river. The soil is a deep bed of bog and alluvial mud, on a substratum of gravel. The only excavation necessary was the lift pit, and its deep entrance to the dock, where a coffer-dam was employed.

2519.

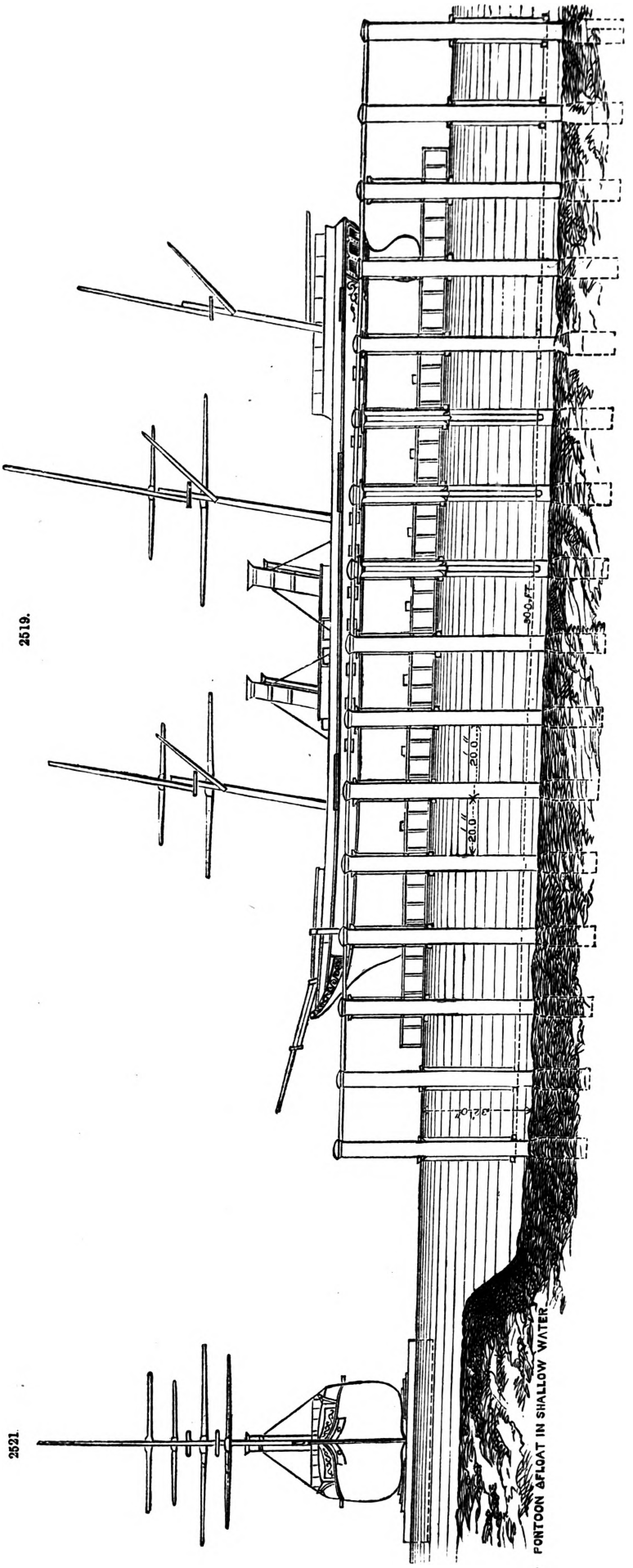

2521.

The depth of water in the lift is 27 ft.; over the remaining water space it is only 6 ft., which is the maximum draught of the pontoons. In this shallow-water space there are eight pontoon berths, separated by jetties for workshops and access; each berth being 60 ft. wide, and from 300 ft. to 400 ft. long, and surrounded by brick retaining walls. The bottom was covered with a level layer of peat clay, to prevent leakage to the gravel beneath. A sluice through the surrounding bank renders it easy, at low water, to empty the whole of the space; but when this is done, a dam must necessarily be thrown across the upper end of the lift, to cut off access to the Victoria Docks. The area of shallow water is 16 acres, affording sufficient space for floating fifteen or twenty pontoons, which, it was estimated, was about the number that might be kept employed by a single lift.

The docking of a vessel consists of two distinct operations. First, the direct raising of the weight on the lift; second, the transportation of the vessel to any convenient position for its repair on the pontoon.

The lift is a direct mechanical appliance for raising the vessel by means of hydraulic presses. It consists of two rows of cast-iron columns, each 5 ft. in diameter at the base, and 4 ft. in diameter above the ground-level, and sunk about 12 ft. in the ground. The clear space between the two rows is 60 ft., and the columns are 20 ft. apart from centre to centre, and are placed on each side of the excavated lift pit, in about 27 ft. of water. There are sixteen columns in each row, giving a length of 310 ft. to the lift; but, as vessels may overhang at each end, there is a practical working length of 350 ft. The columns were sunk in the usual manner, three or four being thus fixed each week. When the requisite depth was attained, the base was filled with concrete, and covered with a layer of 2-inch planks, to act as a cushion for the cast-iron seat on which the press rests. No great accuracy of position is required, as the suspended load tends to bring all the columns vertical, and if any column should, during use, be even sensibly thrust deeper into the soil, the ram follows its work, independent of the level of the press. The columns, Fig. 2523, support no weight, but act solely as guides for the cross-heads of the presses, which move in slots reaching from the top of the presses (just clear of high water) to the top of the columns. The column is covered by a cap, Fig. 2519, and each row is firmly connected together at the top by a wrought-iron framed platform, running from end to end of the dock on each side.

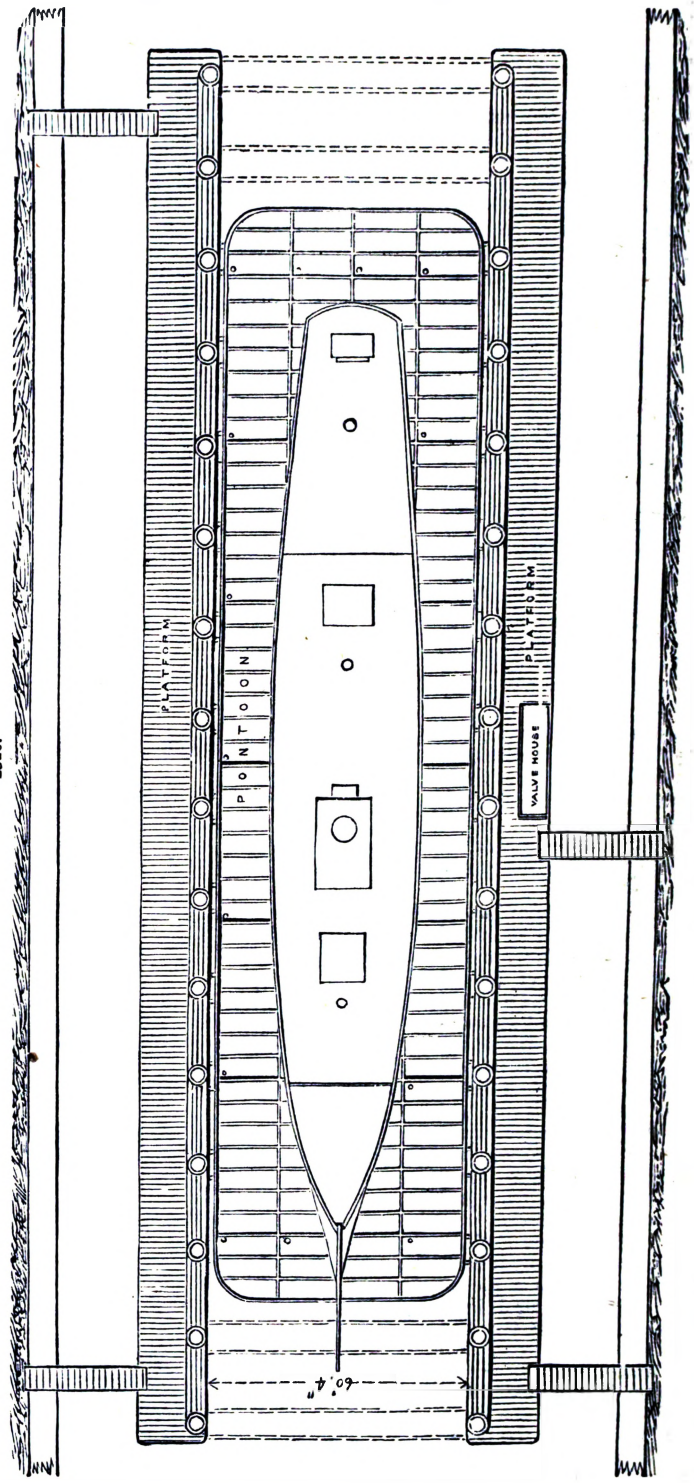

2520.

This platform forms a convenient permanent scaffold for raising the rams. The whole length of a column is 68 ft. 6 in. A scale is printed on each column to register the motion of the cross-heads while rising or falling.

The presses and girders are managed as follows;—Each column encloses a hydraulic press of 10 in. diameter, with a length of stroke of 25 ft.; the top of the press is just clear of the highest water, and it is kept in place by a collar or diaphragm in the column. The rams are solid, and each carries a boiler-plate cross-head 7 ft. 6 in. long, thus extending 1 ft. 9 in. beyond the column on each side. From the ends of the cross-head are suspended, by wrought-iron bars, two iron girders, each 65 ft. long, which extend entirely across the lift to the corresponding column and press on the opposite side. There are thus sixteen pairs of suspended girders, lying at the bottom in 27 ft. of water, when the presses are lowered, but rising above the surface when the presses are raised. They form a large wrought-iron platform, or gridiron, which can be raised or lowered at pleasure, with a vessel upon it. The detail of the machinery is identical with that employed at the Conway Tubular Bridge; and those who saw that bridge raised have only to imagine thirty-two tubes side by side instead of two, and they will have a perfect representation of the lift. The

2522.

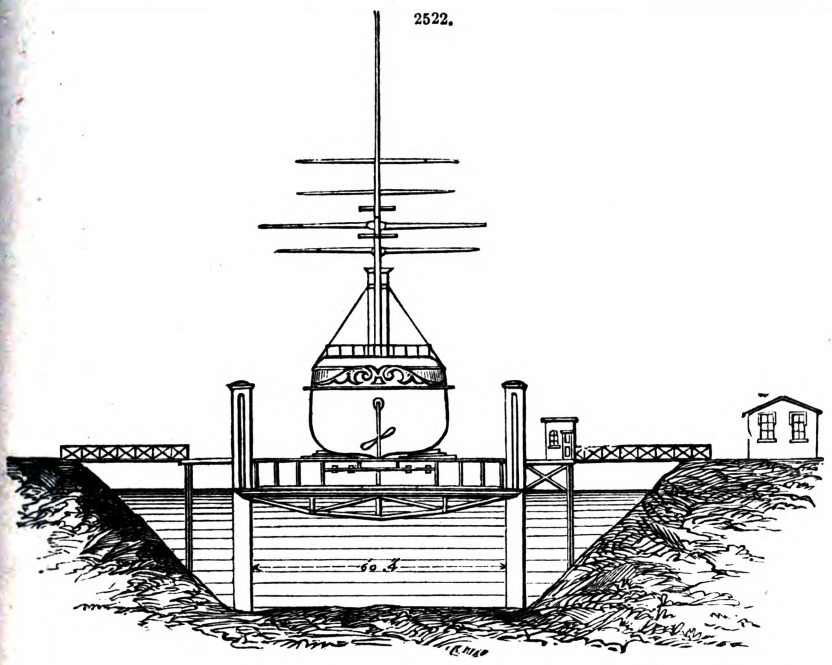

2523.

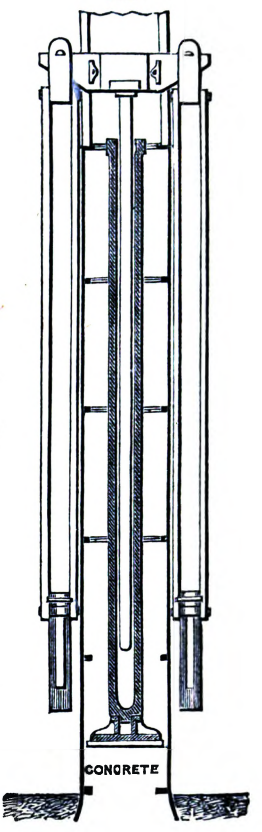

main girders are 5 ft. 9 in. deep, of wrought iron, trussed with a cast-iron top flange. The sectional area of each ram being 100 circular inches, a pressure of 2 tons to the circular inch gives 200 tons as the lifting power of each press, or 6400 tons for the whole lift; but to find the available lifting power, there must be deducted 620 tons, which is the weight of the rams, cross-head, chains, and girders, leaving 5780 tons for the pontoon and vessel. The presses were tested at 2½ tons to the circular inch. The girders are designed for carrying the vessel as a load at the centre, although the load is distributed by the pontoon, and the wide base used for the blocks. The water is forced into the presses immediately beneath the collars at the top, this being an accessible position.

The grouping of the presses was an important consideration. If each press were worked entirely independent of its neighbours, it is evident that precisely the same quantity of water must be thrown into each press to avoid unequal strain. Again, if the whole number were supplied from a common head, the slightest excess of weight at any part of the platform or gridiron would lower that part, the water passing back through the pipes to the presses where less pressure existed; the same difficulty would be experienced with two groups, however arranged. Stability is, however, secured by arranging the presses in three groups. One-half of the whole number, occupying the upper half of the lift, form one group, consisting of sixteen presses. The remaining eight presses on one side form a second group, and the opposite eight form the third group.

The presses in each group are all connected, so that perfect uniformity of pressure is secured in each as regards the individual presses, while the three groups are so arranged that their centres of action form a tripod support, upon which the pontoon is seated. As any one point of the tripod may be raised or lowered without regard to the other two, by the most simple manipulation, the pontoon can be either maintained perfectly level, or any inclination can be given to it that may be desired.

Any pair of presses may be instantly cut off in the valve-room by means of a plug, during the operation of lifting, without interrupting the process. One or more of the end pairs is almost invariably out of use, except with vessels of the largest class. No delay, therefore, arises from the failure of a collar or pipe, and even should a press burst, the water can only escape slowly through

the ½-in. pipe which feeds it; and by opening the escape-valves in the other groups, vessels, partially raised, descend slowly and steadily into the water.

The force-pumps are 1¼ in in diameter. There are twelve pumps, worked by direct action by a 50-horse-power engine; six of these pumps are used for the large group, and three pumps for each of the smaller groups. The power when required is increased by cutting off one or more of the pumps. The engine-house is, unfortunately, 112 yds. from the lift, the water having to be driven all this distance through pipes only ½ in. in diameter. On account of the distance of the engine, a valve-house, for the manipulation of the presses, is erected on the platform alongside the lift. During an operation the engine continues to pump, and the valve-man throws the water into either group, or to waste, at pleasure. The raising of a vessel occupies about twenty-five minutes. The pipes and presses are, to a considerable extent, sheltered from frost by their position, and during the severest cold a few occasional strokes of the engine are found sufficient to keep all in motion, and prevent congelation.

The pontoons are not essential for raising or docking a single vessel, for it is evident that the lift, as described, is all that is required for that purpose. The girders might be connected together by other longitudinal girders, so as to form a sufficiently rigid platform; or the whole might be formed into a pontoon, which would support a vessel after it was raised.

The following is the arrangement adopted;—An open pontoon, proportioned to the size of the vessel to be docked, is selected. Keel-blocks and sliding bilge-blocks, adapted to her shape, form part of the pontoon, which is placed on the girders, and sunk with them to the bottom of the dock. The vessel is brought between the columns, and moored securely over the centre of the pontoon. By lifting the girders the keel-blocks are first brought to bear under the keel of the vessel; the side blocks are then hauled in, by chains laid for the purpose on each side the dock, and the gridiron and the pontoon, with the vessel upon it, are then all raised by the presses clear of the water. The pontoon is provided with valves in the bottom, and thus empties itself of water. The valves are closed, and the girders again lowered to the bottom, but the pontoon, with the vessel upon it, remains afloat. Thus, in about thirty minutes, a vessel drawing 18 ft. of water is left afloat on a shallow pontoon drawing only 4 ft. or 6 ft., and may be taken into the shallow dock prepared for its reception. These docks are surrounded by workshops and tools, with shelter for the men close up to the bulwarks of the ship. The vessel is, in fact, brought bodily into the centre of a convenient workshop. It is taken to the smiths', or the carpenters', or the machine shops, according to the nature of the repairs required, and is moved easily from one to the other.

The number of vessels that can be thus docked is limited only by the number of pontoons, each pontoon constituting a separate and independent dock. The pontoons, which are all about 58 ft. wide, vary in length and depth according to the class of vessel intended to be docked, and are rectangular in form, and open decked. The sides are vertical, and are strengthened longitudinally and transversely by wrought-iron girders, running from side to side, and from end to end, and thus forming a series of rectangular divisions. The pontoons are divided into water-tight compartments by means of bulk-heads formed of the girders, each compartment being provided with a circular valve in the bottom, closed by a screw-shaft. The transverse girders are 8 ft. apart, and support the bilge-blocks on their upper flanges. In the largest pontoons these girders form inclined planes, declining in height towards the centre, to facilitate the running in of the block-frames. There is a strong longitudinal centre girder, with a broad top flange, for supporting the keel-blocks; on each side, the two other longitudinal girders are placed equally distant, and in the line of the side blocks.

TABLE I.—DIMENSIONS OF DRY OR GRAVING DOCKS.

Name or Number of Dock.	Length in Blocks at Bottom of Dock.	Length at Top of Dock.	Width of Entrance.	Depth of Water on Sill at O. W. H. Spring Tides.	Depth of Water at O. H. M. Neap Tides.	Remarks.
PORTSMOUTH.	ft. in.	ft. in.	ft. in.	ft. in.	ft. in.	
No. 1, South harbour dock	228 3	253 6	57 7	20 3	16 3	Number of building slips—one of 1st class and four of 2nd class.
„ 2, South-east basin dock	221 6	252 10	63 4	24 0	20 0	
„ 3, South basin dock ..	275 2	287 1	67 6	25 6	21 6	
„ 4, Middle basin dock ..	279 3	286 3	67 6	21 9	17 9	
„ 5, Middle basin dock ..	208 3	227 2	55 4	20 3	16 3	Being made 4 ft. 3 in. deeper.
„ 6, Harbour dock	189 8	220 1	52 11	20 0	16 0	
„ 7, „ 10, Double docks	644 10	644 10	80 5 88 6	25 6 27 0	21 6 23 0	
„ 8, South inlet dock ..	302 10	333 5	70 0	22 9	18 9	
„ 9, Dock	253 4	283 2	64 11	21 9	17 9	
„ 11, North inlet dock ..	406 0	426 0	70 0	25 9	21 9	In course of construction.
DEVONPORT.						
No. 1, Basin dock	266 0	299 0	65 0	27 10	23 4	
„ 2, „ 3, ...	415 6	437 0	73 0	31 1	27 7	Two old docks being altered one. New one (constructing).
„ 4, ...	209 6	241 2	56 2	20 4	15 10	
„ 5, ...	263 4	275 10	64 0	20 7	16 1	Number of building slips—one of 1st class, two of 2nd class, and three of 3rd class.

TABLE I.—DIMENSIONS OF DRY OR GRAVING DOCKS—*continued.*

Name or Number of Dock.	Length in Blocks at Bottom of Dock.	Length at Top of Dock.	Width of Entrance.	Depth of Water on Sill at O. W. H. Spring Tides.	Depth of Water at O. H. M. Neap Tides.	Remarks.
	ft. in.	ft. in.	ft. in.	ft. in.	ft. in.	
KEYHAM.						
No. 1, South dock	348 2	356 6	80 0	23 0	20 0	
„ 2, Middle dock	281 9	308 0	80 0	23 0	20 0	
„ 3, Graving dock	274 6	307 0	80 0	27 0	24 0	Being altered and made 136 ft. 6 in. longer on keel-blocks, and 109 ft. at tops.
SHEERNESS.						
No. 1, Dock	241 0	253 4	57 7	25 2	20 8	
„ 2, „	225 7	251 10	57 8	25 2	20 8	
„ 3, „	241 0	253 4	63 5	25 2	20 8	Number of building slips—one of 2nd class.
„ 4, „	180 7	203 10	50 3	19 10	15 4	
„ 5, „	154 4	196 1	58 7	14 8	10 2	
CHATHAM.						
No. 1, Dock	203 5	222 5	57 0	16 0	13 0	
„ 2, „	374 6	397 9	62 2	23 6	20 6	Number of building slips—one of 1st class and six of 2nd class.
„ 3, „	320 5	347 5	62 10	23 6	20 6	
„ 4, „	232 0	253 0	62 8	21 0	18 0	
WOOLWICH AND DEPTFORD.						
No. 1, Dock	250 0	265 0	65 0	22 0	17 2	Number of building slips—one of 1st class, seven of 2nd class, and four of 3rd class.
„ 2, „	241 3	272 0	65 0	21 0	16 2	
„ 3, „	264 0	280 8	80 0	21 0	16 2	Being made 10 ft. longer on the blocks, and 74 at the top
Outer dock, Deptford	196 0	196 0	54 0	15 3½	9 8½	
Inner dock, Deptford	167 6½	190 4½	46 10	13 3	7 8	
PEMBROKE.						
No. 1	387 8	404 0	75 0	24 6	18 6	Number of building slips—four of 1st class and nine of 2nd class.
CHERBOURG.						
No. 1, in outer basin	..	246 0	58 0	..	..	
„ 1, in new basin	..	370 0	60 0	..	..	
„ 2, „	..	370 0	60 0	..	..	
„ 3, „	..	340 0	60 0	..	..	Number of building slips—nine of 1st class.
„ 4, „ ..	..	340 0	60 0	..	..	
„ 5, „	..	340 0	60 0	..	..	
„ 6, „ double locks	..	350 0	65 0	..	..	
„ 7, „ „	..	350 0	65 0	..	..	
BREST.						
No. 1, small	..	210 0	56 0	..	..	
„ 2, „	..	210 0	56 0	..	..	
„ 1, double	..	500 0	60 0	..	..	Can be made into four of 250 ft.
„ 2, „	..	500 0	60 0	..	..	
L'ORIENT.						
No. 1, double	..	340 0	58 0	..	..	Recently lengthened.
„ 2, „	..	600 0	..	..	..	Constructing.
TOULON.						
No. 1, old	..	250 0	58 0	..	..	
„ 2, „ smaller	..	230 0	58 0	..	..	
„ 3, „ „	..	230 0	58 0	..	..	
„ 1, new	..	336·69	62 0	..	..	Number of building slips—sixteen of 1st class.
„ 2, „	..	396·88	..	..	..	
„ 3, „	..	545·79	..	..	..	
ROCHEFORT.						
Small	..	210 0	55 0	..	..	
Double	..	450 0	60 0	..	..	Can be made into one of 210 and one 240.
Large	..	360 0	80 0	..	..	
HAVRE.						
New dock	..	426 0	90 0	..	..	

TABLE I.—DIMENSIONS OF DRY OR GRAVING DOCKS—*continued.*

Name or Number of Dock.	Length in Blocks at Bottom of Dock.	Length at Top of Dock.	Width of Entrance.	Depth of Water on Sill at O. W. H. Spring Tides.	Depth of Water at O. H. M. Neap Tides.	Remarks.
LIVERPOOL.	ft. in.	ft. in.	ft. in.	ft. in.	ft. in.	
Canada lock and graving dock	501 0	..	100 0	26 0	19 0	
Huskisson lock and graving dock	396 0	..	80 0	24 9	17 9	
Sandon graving docks—						
No. 1, east	540 0	..	60 0	21 9	41 9	
„ 2, „	540 0	..	70 0	21 9	41 6	
„ 3, „	540 0	..	60 0	21 9	14 9	
„ 4, „	540 0	..	70 0	21 9	14 9	
„ 5, „	540 0	..	45 0	21 9	14 9	
„ 6, „	540 0	..	45 0	21 9	14 9	
Clarence graving docks—						
No. 1, outer gates	405 0	..	45 0	21 3	14 3	
„ 1, inner gates	291 0	..	45 0	18 9	11 9	
„ 2, outer gates	414 0	..	45 0	21 3	14 3	
„ 2, inner gates	288 0	..	32 10	18 9	11 9	
Canning graving docks—						
No. 1	441 0	..	35 9	19 11½	12 11½	
„ 2	488 0	..	35 9	18 3½	11 3½	
Brunswick graving docks—						
No. 1	399 0	..	42 0	20 9	13 9	
„ 2	399 0	..	43 0	20 9	13 9	
Queen's graving docks—						
No. 1	438 0	..	42 0	19 11¼	12 11¼	
„ 2	435 0	..	70 1	21 9	14 9	
BIRKENHEAD.						
No. 1, new dock, constructing	750 0	..	85 0	25 9	..	
„ 2, „ constructing	750 0	..	50 0	25 9	..	
„ 1, dock, belonging to Laird Brothers	300 0	..	40 0	16 6	..	
„ 2, „ belonging to Laird Brothers	180 0	..	45 0	16 6	..	
„ 3, „ belonging to Laird Brothers	400 0	..	65 0	24 3	..	
„ 4, „ belonging to Laird Brothers	440 0	..	85 0	20 6	..	
SOUTHAMPTON.						
Western dock	343 0	346 0	66 0	20 0	16 0	
Middle dock	232 0	233 0	51 0	15 6	11 6	
Eastern dock	425 0	538 0	80 0	20 0	21 0	The eastern dock, made in 1854, is of brickwork, with Portland copings, and is stated to have cost 53,000*l.*

The total area and quay space of the Liverpool and Birkenhead Dock is as follows:—

Name of Dock.	Water Area.		Quay Space.	
	acres.	yds.	miles.	yds.
Liverpool ..	251	2664	18	763
Birkenhead ..	121	2869	5	786
Total.. ..	372	5533	23	1549

TABLE II.—PRINCIPAL DIMENSIONS of other DRY DOCKS of 300 Feet in Length, and upwards. 1862.

Name of Port.	Name of Dock.	Length over all.	Breadth of Entrance.	Depth of Water over Sill at O. H. W.
		feet.	feet.	feet.
Leith	On the East Sands	400	71	23
Sunderland	Laing's	300	48	14
„	Commissioners	315	45	16·8
West Hartlepool	No. 1	375	60	16
„	No. 2	355	50	17
Great Grimsby	No. 1	400	70	19·6
Thames	Northfleet	400	74	19·6
„	New Crane	463·6	43·9	14·6
„	Union (upper)	331·6	39·8	15
„	Regent, No. 12	338	42·2	16
„	Green and Co.	342	62	18

TABLE II.—PRINCIPAL DIMENSIONS OF OTHER DRY DOCKS, &c.—*continued.*

Name of Port.	Name of Dock.	Length over all.	Breadth of Entrance.	Depth of Water over Sill at O. H. W.
		feet.	feet.	feet.
Thames	General Steam	328	40	14
Portsmouth	Camber Dock	345	50	17·3
Isle of Wight	Cowes	330	36	16·6
Plymouth	Mill Bay	367	80	27·6
Falmouth	No. 1	360	54	14
„	No. 2	400	90	20
Appledore		326	43·3	15
Bristol	Great Western	300	45	13
„	Albion	380	38·6	13·6
„	Green	323	56	15
Cardiff	East Bute	435	48	18
Swansea	No. 3	300	36	16
Holyhead		307	62·9	17
Greenock	Steel	361	47·8	16
„	Scott	300	45	15
„	Corporation	360	38	13
Dumbarton		300	41	13
Glasgow	Tod and M'Gregor	500	56	18
Dublin	No. 1	400	70	18
Londonderry		321	50	18
Cork	West Passage	390	86	24
„	Wheeler's	420	59	20
Trieste	Austrian Lloyd's	300	..	25
Bombay	Old Dock	613	51·9	16
„	Duncon Dock	600	63	16
Singapore	New Harbour	390	43	15
„		450	62	18
Canton River	T. C. Couper	550	72	17
Amoy		300	..	..
Australia	Cockatoo Island	306	58	20·6
„	Morts, in Waterview Bay	345	75	19
Rio Janeiro	Cobras Island	301	70	28

TABLE III.—FLOATING BASINS IN ENGLISH GOVERNMENT DOCKYARDS. 1862.

Name of Dockyard.	No. of Basins.	Water Area of Basins. A. R. P.	Lineal feet of Quay Space in each Basin.	Remarks.	Width.	Depth of Water on Sill at Ordinary High-water Spring Tides.	Depth of Water on Sill at Ordinary High-water Neap Tides.
					ft.	ft. in.	ft. in.
Deptford	1	1 1 8	770	No locks.	50	20 0	14 5
Woolwich	Outer basin	3 0 33	1250		65	22 10	18 0
„	Inner basin	2 2 16	1250		65	21 0	16 2
Chatham	Nil.	.. ..	..		..	.. ..	.. ..
Sheerness	Great basin	3 2 5	1400		66	27 0	22 6
„	Small basin	1 0 23	850		50	20 6	16 0
„	Boat basin	1 1 7	551		100	26 0	21 0
Portsmouth	South basin	2 1 30	950	When Docks Nos. 7	67	24 6	20 0
„	Steam basin	7 0 0	2190	and 10 are unoccupied they may be used as a lock 664 ft. long, with 27 ft. H.W. spring tides.	80	25 0	21 0
Devonport	1	1 2 6	800	No lock.	74	30 6	26 8
Keyham	South basin	7 0 32	2150	Entrance lock 252 ft. 8 in. between caissons.	80	Outer entrance 36 0 Inner entrance 34 0	Outer entrance 21 6 Inner entrance 29 6
„	North basin	5 0 0	1350		80	25 0	20 6
Pembroke	Nil.	.. ..	..		..	.. ..	.. ..

Among the standard works relating to this subject we may mention the following;—Belidor, 'Architecture Hydraulique,' 4 vols., 4to, Paris, 1737-53. De Cessart, 'Description des Travaux Hydrauliques,' 4 vols., 4to, 1806–8. Elmes, J., 'Docks and Port of London and Liverpool,' folio, 1838. 'Life of T. Telford,' 4to, with folio Atlas of Plates, 1838. Sganzin, 'Cours de Construction,' 3 vols., 4to, and Atlas in folio, Paris, 1839–41. Minard, 'Cours de Construction des Ouvrages Hydrauliques des Ports de Mer,' 2 vols., 4to, Paris, 1841. Webster, T., 'The Port and Docks of Birkenhead,' 8vo, 1848. C. B. Stuart, 'The Naval Dry Docks of the United States,' 4to, New York, 1852. Sir J. Rennie, 'Theory, Formation, and Construction of British and Foreign Harbours,' 2 vols., folio, 1854. Gassend et Labour, 'Travaux Hydrauliques Maritimes,' folio, Marseille, 1861. Vuigner, 'Entrepôts de la Villette,' 4to, with Plates in folio, Paris, 1861. Roffiaen, 'Constructions Hydrauliques,' 3 vols., 8vo, Bruxelles, 1861–63. Humber's 'Record of Modern Engineering' for 1864 and 1866. See also numerous papers on Docks in the 'Minutes of the Institution of Civil Engineers,' 'Annales des Ponts et Chaussées,' 'Annales du Génie Civil,' and 'Engineering.'

See ANCHOR. BOND. BRICKWORK. CONSTRUCTION. DAM. EMBANKMENTS. KEELS AND COAL SHIPPING. LIFTS, HOISTS, AND ELEVATORS. LOCK GATES. WATER-WORKS.

DOG. FR., *Clameau;* GER., *Klammerhaken;* ITAL., *Graffio, Grappa;* SPAN., *Grapa.*

A dog is a grappling iron, with a claw or claws, held by a chain or ropes, for fastening into wood or other heavy articles for the purpose of raising or moving them; or an iron with fangs for fastening a log in a saw-pit, or on the carriage of a saw-mill. A *dog* is a piece in machinery acting as a catch or clutch; especially the carrier of a lathe. An adjustable stop to change the motion of a machine tool is also called a dog.

DOLLY OR DOLLY-TUB. FR., *Cuve à rincer;* GER., *Schlämmfass;* ITAL., *Troguola;* SPAN., *Cubo de lavar.*

A dolly is a contrivance, turning on a vertical axis by a handle or winch, for facilitating the washing of ore; a stirrer.

DOME. FR., *Dôme;* GER., *Dom;* ITAL., *Cupola;* SPAN., *Cúpula.*

In architecture, *dome* is a roof, or structure raised above the roof of an edifice, usually hemispherical in form, but sometimes the segment of a spheroid, ellipse, polygon, or other similar figure; a cupola.

The word is usually applied to any erection resembling the dome or cupola of a building, as the upper part of a furnace, and the like. A steam-dome. See BOILER. FURNACES. LOCOMOTIVES.

DONKEY-ENGINE. FR., *Machine à vapeur auxiliaire;* GER., *Kleine Hülfsdampfmaschine;* ITAL., *Macchina di alimentazione;* SPAN., *Máquina auxiliar.*

See ENGINE, *Varieties of.*

DOVETAIL. FR., *Queue d'aronde; tenon à queue;* GER., *Schwalbenschwanz.*

The manner of fastening boards or timber together by letting one piece, in the form of a dove's tail spread, or wedge reversed, into a corresponding cavity in another, so that it cannot be drawn out. *Dovetail Machine*, see WOOD WORKING MACHINES.

DOWEL-PIN. FR., *Goujon;* GER., *Diebel oder Dbbel;* ITAL., *Perno;* SPAN., *Pasador.*

A dowel-pin may be of wood or metal, and is used for joining two pieces, as of wood, stones, or other material, by inserting part of its length into one piece, the rest of it entering a corresponding hole in the other, as in the heads of a cask. A *dowel-joint* is a joint made by means of a dowel.

DRAG-BAR OR DRAW-BAR. FR., *Barre d'attelages;* GER., *Die Kupplestange;* ITAL., *Sbarra d'attacco;* SPAN., *Vara motriza.*

A bar or link for attaching carriages together, or the moving power, as on railways; a coupling; called a *drag-link* and *draw-link*. A strong iron bolt or pin passing through the end of a *drag-bar*, and serving to fasten the coupling of a locomotive and tender or that of two carriages on a railway, is termed a drag-bolt. See BUFFER. RAILWAY ENGINEERING.

DRAINAGE. FR., *Drainage;* GER., *Entwässerung;* ITAL., *Fognatura;* SPAN., *Desagüe.*

Drainage is the mode in which the waters of a country pass off by its streams and rivers. The system of drains and their operation, by which water is removed from towns, railway beds, and other works. See IRRIGATION. IRRIGATION AND DRAINAGE. PIPES AND CULVERTS. PUMPS AND PUMPING ENGINES. TRAPS, *Drainage and Stench.*

Drainage of Mines.—The draining of a mine is one of the most important subjects in practical mining operations. The waters which come down the walls in drops gather into little streams, and these, united, form in extensive mines a considerable body. The quantity of water which may be furnished by a mine is not easily estimated beforehand. We can form some opinion as to the probable amount by reference to the kind of rock which we penetrate, and the capacity of the country for springs and wells; still this is no certain criterion, for the ground and rocks may be dry at the surface, and yet contain much water beneath. The rock may be covered by a layer of waterproof clay, which causes the surface to be wet and swampy; still, below it may be free from water, and a mine in such places perfectly dry. The elevation of a mine has an important influence upon the quantity of water which it may contain; most rock is accessible to water, which filtrates through its crevices, and gathers below. It will accumulate where the filtration is checked, and the rocks become saturated. Some rocks are remarkably dry, others contain much water. Volcanic rocks and limestone do not furnish much water to a mine; granite, also, is dry. The American copper mines at Lake Superior, which are chiefly in trap rock, are remarkably dry. Stratified rock, of either transition or secondary formation, is dry at the surface when the strata is inclined, but there is abundance of water in its lower portions. A deep mine in the gold region of the Southern States is always found to be very wet. Are the strata of rock horizontal, or nearly so, the quantity of water is greater in the higher parts of the hills than below. The coal region of the west of America furnishes sufficient evidence for this assertion. In all instances the quantity of water in a mine increases with its surface, that is, with the extent of its workings, apart from any other circumstance to influence it. When crevices are opened in the progress of work which

communicate with reservoirs of water in the interior of the rock, or pools at the surface, springs are formed which frequently add considerably to the waters of the mine. When a mine penetrates through a water-proof bed of clay, gypsum, or a layer of limestone, the water is in most cases more abundant below than above such stratum. In most of the mines in operation, where a circulation of air is freely admitted, the quantity of water is generally greater in summer, spring, and fall than in winter. When the interior of a mine is warmer than the atmosphere it will furnish moisture to the latter in its circulation through the mine; and when it is colder it will condense watery vapours of the air, which enter and increase the water. In all cases attention must be given to the manner in which the water penetrates, that its direct effect on the workmen may be avoided. It not only annoys them, but delays the work, and causes the mineral unnecessarily to be more expensive, by interfering with the comfort of those engaged in its extraction.

By Levels.—In forming a water-drain in the pavement of a drift or a gallery, it is necessary to pay some attention to its form. The walls of the drain also should be smooth; not that rough walls cause much friction, and diminish the velocity of the water, but because all the water issuing from the workrooms carries along some impurities—particles of rock, minerals, clay, and so on. This heavy matter will settle in rough, contracted, or crooked channels, more than in smooth and straight ones; this sediment causes pools of water, which soon overflow the pavement, rendering the mine wet, disagreeable, and injurious to the health of the workmen. These defects may be avoided in some measure by giving more fall to the drain, but it will not remove the evils resulting from an imperfect form of the channel. When it is possible, the water channel should be located on one side of the gallery or drift, rather than in the middle of the floor. When the drain is covered by timber or planks, or a roadway, it is not easily accessible, and sediment may accumulate and overflow a portion of the mine before it is observed and can be removed. If the channel is on one side, it may always be uncovered, and any obstruction is soon detected and removed. In all cases, no matter where the drain is located, it should be easy of access at any time. If parts of a drain are necessarily covered, where there is loose rock or gravel, it is advisable to make such parts spacious and of mason-work. Wooden culverts are liable to decay, particularly in a mine, and if the location of the culvert is inaccessible, it cannot easily be replaced without much disturbance. This is the more serious if the roadway extends over such culverts. The size and fall of a drain are calculated according to the laws regulating the motion of water in canals, but as there are many modifications of those laws, on account of obstructions, we are not justified in referring to them. The location, size, and fall of the drains are chiefly ascertained by observation. One foot fall in 100 ft. of length is considered sufficient in all instances; but as this, in long levels, causes a considerable loss in the depth of a mine, less fall is taken in many cases, and the size of the channels increased. One foot fall in 1000 ft. causes a considerable current; but the water must be clear, or the drain is liable to obstruction. A deep pool provided at the head of the drain will retain most of the mud issuing from the workrooms and roads, and pass the water free from sediment. Such pools may be cleared of their contents when filled, and serve a good purpose in draining a mine to its lowest depth.

By Pumps.—Much ingenuity has been expended in the construction of pumps, in order to drain mines with the least possible expense. We shall not allude to the numerous forms of pumping machines which have been contrived in past times, nor to many of the imperfect means for pumping at present in use. We shall, however, describe that kind of machinery which is suitable to perform the most labour with the least expense. We have spoken of the hoisting of water by means of the rope and barrel in former pages, and shall confine our present remarks to pumps only. Notwithstanding the progress in mechanics and the construction of machinery, we find men who waste time and means on the invention of machinery for lifting water which never will successfully compete with well-constructed pumps. The principles governing the construction of pumps are not so generally observed as they should be. We state, for this reason, those laws which govern them.

Principles of the Pump.—There are three principal kinds of pumps—the sucking, the lifting, and the forcing pump; all these are used in mines, and often the whole of them in one set. The sucking pump consists essentially of the cylinder, the sucking pipe, the piston with its valve, and the sleeping valve at the lower extremity of the sucking pipe. When the lower end of the sucking pipe is immersed in a reservoir containing water, and the piston in the cylinder raised, the air contained in the space between the piston and the sleeping valve will expand, in proportion to the space evacuated by the piston. The density of the air without the pipe is greater than the density of that within, and pressing upon the water forces it into the pipe through the sucking valve so high as to produce an equilibrium between the external and internal air. As the air within is expanded in proportion to the space moved by the piston, an equal amount of water will be pressed into the pump to fill the space evacuated by the piston. The density of the air within and that without having become equal, the sleeping valve shuts by its own gravity, and prevents the flowing out of the water from the sucking pipe. The piston being now depressed, it will compress the air within; this causes the valve to open, and the air escapes through it. It is easily conceived that this play of the piston, when repeated, will raise the water to a certain height. It would raise it to an indefinite height if the air, or the gas formed by water in a vacuum, was not elastic. When the column of water thus raised is equal to the pressure of the atmosphere upon the vacuum, which height is indicated by the barometer, the piston may be raised, but it will produce only an elastic fluid. Either the water will evaporate and condense with the motion of the piston, or if there is any air in the pump it will expand and condense, following the motion of the piston. When nothing interferes with the motion of the water in the sucking pipe, and when the piston closes perfectly air-tight in the cylinder of the pump, the water may be raised to the average height of 33 ft.—the greatest height 34 ft. In practice this height never can be obtained, for the following reasons;—There is always a loss of height, because there is friction between the water and the pipe, which diminishes its motion. The sleeping valve always loses a little water as it shuts. The valve of the piston loses also from the same cause; and if the piston does not fit closely to the

cylinder, there is a loss of height in the water. As smooth surfaces diminish friction, particularly between fluids and solid matter, it is of great importance to make the interior of pipes as smooth as possible. The loss of power in the sleeping valve is partly caused by the weight of the valve resisting the upward motion of the water, and partly by the impact of the valve when open, which prevents its quick return; and as the water suffers less from this cause, it will flow back before the valve is shut again. In both cases it is, therefore, advantageous to make the valve as light as possible, in order to oppose little or no obstacle to the motion of the water. The loss in power, or in the height of water in the pump, is here in proportion to the weight of the valve. If a sleeping valve covering 1 sq. in. weighed 15 lbs., it would not admit of the passage of any water, for that weight is equal to the pressure of the atmosphere. The weight of the valve causes therefore a loss in the proportion of its weight to that of the atmosphere. This loss is increased when we consider the impact of the valve. In the sleeping valve of a sucking pump there is, therefore, a considerable loss of power, which may be diminished or increased by altering the weight of the valve. The valve in the piston is not liable to the same objections as the sleeping valve. If the piston-valve is of great weight it will resist the motion of elastic fluids considerably; that of water it cannot affect, but by the friction which it causes in opposing its weight to the motion of the water. On the return of the piston, after having arrived at its culmination, a considerable loss is caused by the impact of the valve, which is greater in a heavy than in a light one. We see here, that the weight of a valve exerts considerable influence on the effect of a pump, particularly on that of a sucking pump.

The form of valves is of not less importance than their weight. A poppet-valve, in the form of a flat dish, is the most imperfect, because it is heavy, and does not afford a favourable form for the passage of water. The conical poppet-valve is better than the flat dish. It causes less disturbance in the current than the first valve, but it loses water because it is heavy and shuts slowly. Balls and cones are valves working well in small pumps, but are inapplicable in large ones. In pumps for mines hardly any other form of valve can be applied to advantage than that of the trap-valve. We allude to these particularly in the following remarks: valves should be as light as possible, for their weight must be lifted by the moving power before any water can pass. If the weight of a valve is great, the power required for raising it must also be considerable. The weight of the valve should be so regulated that its pressure upon its bearing may be small, and that it may be raised with the least power. When the valve is raised to its maximum, it should be as light as at the bottom, that its tendency to shut may not be retarded by impact. It must be quicker in its returning motion than the motion of the water. We find here that the horizontal position of a valve is contrary to principle, and that a perfectly vertical one is the best. The vertical valve has its disadvantages in connection with vertical pumps, because it always requires curves to be made in the pipes leading the water to and from it. What is here gained in the form of the valve is lost in the curve of the pipes. It is therefore of little advantage to employ vertical valves; the same may be said of inclined valves; and the question rests then with the horizontal trap-valve only. There is little doubt that this form is the most advantageous; but there are objections to the common metal valve, and also to the leather valve. The common metal valve, as represented in Fig. 2524, is a good one, but in heavy pumps it causes strong vibrations, and requires constant repair. This valve could be fastened to a spring, either of steel or india-rubber, so that it would be repulsed in every position, and nowhere at rest. When a valve is shut with pressure upon it, it must be so far lifted by a spring as to balance its own weight, and also some of the incumbent pressure of the water; but the spring must not open the valve. When it reaches its highest elevation a spring should force it back in advance of the returning water.

2524.

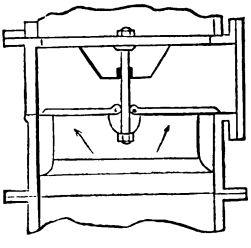

2525.

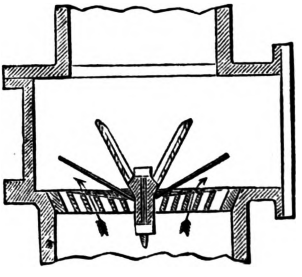

2526.

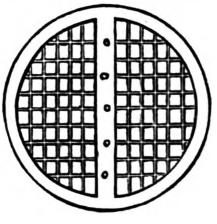

If these conditions could be complied with in practice, there is no doubt but any kind of valve affording a large passage would answer. Such suitable arrangements with valves may be possible; but we do not know of any which perform well and which we can recommend. Recently a most perfect form of valve for water-pumps of limited pressure has made its appearance. In Fig. 2525 we have represented one form of this valve, and in the course of this article we shall allude to some others. The valve is here formed simply by a sheet of vulcanized india-rubber, $\frac{1}{4}$ of an inch thick in small valves, and increasing to $\frac{1}{2}$ an inch in thickness in large valves. The under-side, upon which the rubber rests, is represented in Fig. 2526. It is a cast-iron frame, round or square as the case may be, having a cross-bar in the middle of its area upon which the top and the rubber are screwed. The whole area of this plate consists of oblong openings for water, $\frac{1}{4}$ of an inch in width for small pumps, and from that to $\frac{1}{2}$ an inch in width for large pumps, and a pressure of 15 or 20 lbs. to the square inch. The oblong holes in this plate may form a grate like that in a stove, or the bars may be divided into compartments by cross-bars, which in the meantime stiffen the plate and prevent its injury by slight causes. The sheet of india-rubber

which is screwed down in the middle, is easily lifted by the slightest pressure from below, and the openings in the bottom plate having a somewhat inclined direction, lift the valve very gently, and force it all at once to the full width against its angular support. It offers little or no resistance to the passing water by its own weight; it merely diminishes the passage for water. With the returning stroke of the pump, the water presses back upon the valve, passing through holes in the angular support This valve causes less loss of power than the best valves of other forms; and gravity, which causes considerable contraction of the current of water in other cases, has little influence upon it. The small openings in the bottom plate occasion some loss of power by friction, but these holes may be polished, and in that case the loss is small. The greatest advantage of this valve is its soft bearing and perfectly close fit, which in mines is of considerable importance, because the waters of a mine often contain impurities and sand, which cause metal valves to close imperfectly. The simplicity of this valve is another recommendation which cannot be too highly appreciated in mines.

Lifting Pump.—When water is raised in the sucking pipe, which in practice should not be higher than 20 or 25 ft., and the piston is hollow and provided with valves, it will pass through the piston and ascend to any height we please. This height is limited only by the strength of material. In Fig. 2527 a lifting pump is represented, which shows the sleeping valve considerably above the lower extremity of the sucking pipe. This arrangement is necessary where the sucking pipe dips into an inaccessible pool of water. In such cases all that kind of machinery which is liable to need repairs must be easily accessible. It is not necessary to place the sleeping valve in the cylinder, or close to the piston, as shown in the drawing. It is sufficient if the valve is above the surface of the pool from which the pump draws its water. When the water in the lifting pump is raised to the height necessary for its discharge, a mouth-piece is appended to the vertical pipe, which may be directed to any point which well secures the flowing off of the water. In this case, as well as in that of the sleeping valve, the form of valve and its operation has a decided influence upon the effect of the pump. If the valve in the piston is heavy it will press upon the passing water, contract the passage for it, and cause friction. If the material of the pump, that is, piston-rod, levers, or other machinery connected with it, is elastic, or if any gas is in the water, or the water warm, the elasticity thus produced will cause an oscillation in the column of water above the piston, and this by its impact will occasion a considerable loss of power, particularly when the column of water is high. It is therefore necessary, in order to produce the best effect in a lifting pump, that the valves should be light and the machinery of the most rigid material. The above-mentioned valve, with iron pumps and machinery, is for these reasons the most perfect.

2527.

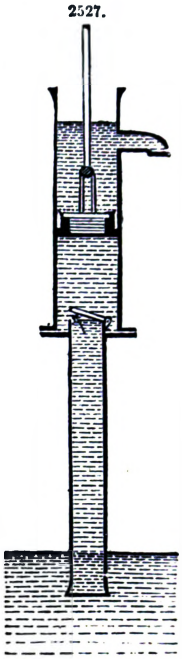

Of Pistons.—It is an essential condition in pumps that pistons should fit closely to the sides of the cylinder. This object cannot be obtained in square pumps, for which reason they are imperfect machines. Wooden cylinders are liable to abrasion, and consequently soon cause leakage at the piston, for which reason wood is a very imperfect material for pumps, even for those of low elevation. Wood is not strong nor close-grained; it is liable to filtration through its pores, and is therefore not suitable for making good pumps for high elevations. Pistons should fit tight in the cylinder, and afford as much opening for the passage of water as possible. In Fig. 2528 we represent a piston, which, according to our present knowledge, is the most perfect for a lifting pump of limited height. It is made of iron or brass, as the case may be, cast in one piece, and turned. The packing is produced by a series of steel rings, one laid on the top of the other, so as to fit closely between themselves; these rings are spring-hardened, and their diameter is somewhat larger than the diameter of the cylinder of the pump, so that the elasticity of the rings may cause a close fit in all parts. These rings are held at the face of the piston and in their places by a circular ring screwed firmly on the top of the piston, so as to give but very little play to them. The length of one of these rings is a little less than the circumference of the cylinder, and the open space thus caused in one of the rings is covered by the sound part of the next ring. The piston itself forms a grate, similar to that represented in Fig. 2525, with this difference, that here no solid bar traverses the area. It is entirely composed of small bars and oblong or rectangular spaces; the centre, containing the piston-rod and the circumference, shows the only solid parts. Above the piston, some inches distant, a round plate is screwed to the rod, which is permanently fixed in its place. This plate is also pierced with a number of round holes, or forms a grating of oblong apertures, similar to those in the piston. A sheet of vulcanized india-rubber, larger than the last-described plate, plays up and down with each stroke of the pump, resting either upon the piston, in the upward motion, or against the plate in the downward motion of the piston. In this manner the apertures in the piston are either shut or opened, according to the motion of the piston. The water thus passing through the apertures finds a circular space around the plate above, which is its passage. In this arrangement a considerable loss of power is caused by the descent of the india-rubber sheet. This loss is equal to a part of the distance traversed by the sheet, compared to the stroke of the pump. We may here employ the valve shown in Fig. 2525: but this diminishes the aperture in the piston by the solid bar in the diameter; still we are inclined to consider the form of Fig. 2526 superior to that of Fig. 2528.

2528.

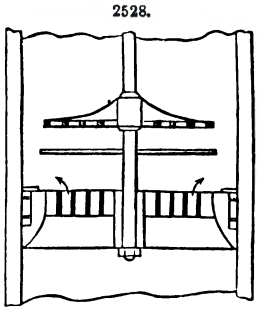

Force-Pump.—This kind of pump has no valve in the piston, by which it is chiefly distinguished

from the lifting pump. The piston is here solid, and the water is driven to some side pipe in which the lifting valve is fastened. In Fig. 2529 a common force-pump is shown. The solid piston is moving in a metal cylinder, which may be either of cast iron, brass, copper, or other metal. The water is sucked from the pool by its upward motion, and drawn into the cylinder; when it returns or descends, the water is forced out of the cylinder, and the sucking valve closes. The force-valve is now opened, which admits the water into a pipe, when it may be raised to the desired height.

We here very soon perceive what causes the chief loss of power in this pump. The water, in being drawn into the cylinder, has attained a certain direction in its motion, and when arrived at its maximum of speed and elevation, it is suddenly stopped and its motion changed. Water is almost inelastic, and any sudden alteration in the direction of its motion will create considerable resistance in its particles; it therefore reacts upon the piston, causing much loss of power. This loss increases more rapidly than the speed of the piston, and, perhaps, is not far from the cube of that speed. These pumps are not well adapted for use in mines. They require much repair, are expensive in the first cost, and also in consequence of loss of power.

2529.

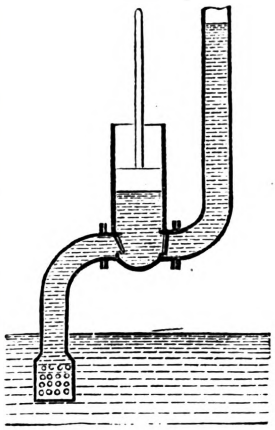

2530.

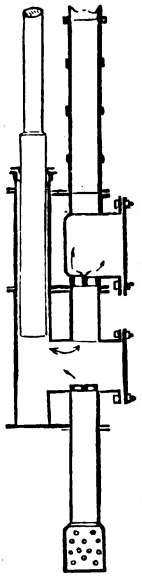

Force-pumps similar in principle to the above, but different in construction, are extensively employed in English mines, and in water-works for supplying cities with water. This circumstance is a recommendation, but it does not make these pumps better; and if we blindly imitate what has been done by others, we may be led into the same error.

Fig. 2530 is of a pump of this kind. Instead of a piston a plunger is used, or second cylinder playing in the main cylinder, which latter is here a common strong cast-iron pipe. The only advantage this pump possesses over the above-mentioned force-pump is the absence of the piston-rod, which does away with the stuffing box for it, and also the friction caused by it. This, however, appears to be a small advantage, when we consider that the stuffing box for the pump, Fig. 2529, is a mere guide, and that a piston can be more accurately adjusted to the cylinder, so as to afford a close packing, than a plunger. The motion of the water is here the same, and a similar kind of action and reaction is produced, and the same loss of power must consequently ensue. These pumps are useful when an exceedingly slow motion of the piston is sufficient to raise the required amount of water. If a pump of this kind is chosen of sufficient dimensions to do the work with a slow motion, it will answer admirably well; but lifting pumps of large dimensions work as well, or even better. In leading pipes a long distance, or forcing water to a considerable height by one set of pumps, it is most useful to employ force-pumps, because when the piston-rod of the lifting pump descends through long pipes, its size is greatly increased, and the pipes must be made wide and strong. Force-pumps are therefore necessary in deep mines, where no room can be provided for a successive set of lifting pumps.

Pipes.—This is a subject of considerable interest in relation to the drainage of mines by pumps; for all the water raised by the pump must be conducted in suitable pipes to the desired height; and as the expense caused in their purchase is an important item, it would be well to ascertain the most profitable dimensions, in order to avoid unnecessary cost as well as imperfect work. When a pipe is filled with water, or any fluid, it presses upon the sides of the pipe with a force proportionate to the head. Pipes must be equally wide throughout their length; no contractions of any kind should be permitted; even bulgings are disadvantageous to the motion of water when imperfectly made. Curves, and particularly sharp angles, are highly objectionable. If such angles or knees cannot be avoided, it is necessary to make the radius for the curvature as long as possible. When such a curvature is not a part of a small circle, and not an acute angle, its influence on the motion of water in the pipe may be neglected; but in all cases where a pipe turns short, or doubles an angle, the loss in power must be taken into the calculation.

The friction of water in pipes is considerable, particularly under great velocities. If we call V the velocity with which water flows in straight pipes, L the length of the pipes, H the height of water or head, and R the radius of the pipe, the velocity in the pipe will be

$$V = 53\ 58 \times \sqrt{\frac{\frac{1}{2}R \times H}{L}}.$$

It follows from this that the loss in power increases with the square of the velocity, and that the least velocity is the most advantageous in practice. Frequently we find the velocities in water conduit pipes great, and of course a considerable loss of power is experienced. As a rule, we may state that water should not move with a greater velocity than 4 ft. per second in smooth and straight pipes. In curved pipes the velocity should be less, and in curved and contracted pipes still less. In the latter case the velocity should not exceed 2 ft. per second, and this should be reduced one-half if the pipe is longer than 100 diameters. We thus perceive that curves and contractions in pipes, to which roughness may be added, are imperfections which should be avoided by all means. They make it necessary to increase the width of the pipes, and thus the cost is increased.

The thickness required for pipes is determined by the pressure which may act upon their walls. The higher the water is in a vertical pipe, the greater is the pressure it will exert, and hence the strength of the pipe must be proportionate. As the tendency to rupture also increases with the diameter of the pipe, it follows that the larger the diameter the more metal will be required to withstand the pressure. If we call the diameters of two pipes D and d, the perpendicular height of water in the pipes H and h, and the thickness of the pipes T and t, we obtain the following equation, $T : t :: H \times D : h \times d$. When the value of one of these sizes for a certain material is known, we obtain the other very readily; that is, if we know that a certain pipe is strong enough to resist a certain pressure, we find the thickness of another pipe by substituting the values in the equation.

Experiments on various materials have shown that if we express E = T in twelfths of an inch, H in feet, and D in inches, the strength of material must be as the following numbers. For lead, $E = \frac{H \times D}{80}$; for cast iron, $E = \frac{H \times D}{200}$; and for wooden pipes with iron rings, $E = \frac{H \times D}{4}$. The thickness of a pipe is therefore as the height, and it should increase with the latter. When a set of pipes of a certain height are properly constructed, the upper part may be either thinner, or made of a weaker material in case it is cheaper. Cast-iron pipes are the most common in mines, and in fact are the only practicable pipes; but as this material is liable to great variation in quality, and also the thickness of cast iron cannot be depended upon for uniformity, we should increase the strength found by the above formula at least 25 or 30 per cent. We find, then, for a cast-iron pipe which is to bear a pressure of water 50 ft. high, and 6 in. in diameter, $E = \frac{50 \times 6}{200} = 1{\cdot}5$, or $\frac{1}{8}$ of an inch in thickness. Such a pipe cannot be cast, and we may assume that a cast-iron pipe of 6-in. bore must contain $\frac{1}{2}$ an inch of iron. This would afford strength for 200 ft. head, but as the formula indicates the extreme thickness, it is advisable not to extend pipes of $\frac{1}{2}$ an inch metal and 6-in. bore lower down than 150 ft. Each additional 40 ft. in depth requires $\frac{1}{8}$ of an inch additional thickness of metal.

The quantity of water furnished by a stroke of a pump is exactly equal to the space which is formed by the piston in the cylinder; that is, it is equivalent to the height of stroke multiplied by the area of the piston. If R is the radius of the piston, or bore of the cylinder, and S the stroke of the pump, the quantity of water furnished by each stroke $= R^2 \times 3{\cdot}1415 \times S$. The height to which the water is lifted has no influence upon this result. We assume in this formula that no water is lost by the valves, which is not the case, as we have seen above. As this loss depends upon the form of the valve, we cannot introduce a general coefficient which shall express it. The loss is often considerable, but as the water is not lifted which thus flows back, the diminution of power is not directly as the quantity, but a permanent part of it. Leakage between the piston and the cylinder is calculated on similar principles as the loss caused by the valves.

By actual experiment, it has been found that a man may lift 80 gallons of water in one minute 10 ft. high, by a good pump. He will, therefore, lift 160 gallons 5 ft. high, and 40 gallons 20 ft. high in the same time. The labour performed by men, animals, and machinery is always a product of time and power; and as a man or a machine can make advantageously but a certain number of motions in a certain time when applying their power, we are under the necessity of modifying the dimensions of a pump to the kind and form of motive power which we employ. A man may make from 60 to 80 motions per minute without over-exertion; the contractions of the muscles admit of such a number; and if a man, or a number of men, are employed to move a piston directly, or by a lever, the dimensions used must be such that the power of the men can be profitably applied. The above standard, that is, 80 gallons lifted 10 ft. in one minute, is a high result for a man's labour. It brings the unit of his power to $80 \times 8 \times 10 = 6400$ lbs. 1 ft. high in one minute, a result which is, for the average of human labour, by one-half too high. Here, however, as in all cases when we calculate the size of a pump, it is advantageous to assume a high standard of the unit power, because it will furnish a larger-sized pump than a low standard. We take thus for one man, 6400 lbs. lifted 1 ft. high in one minute; for the labour of an ox, 15,000; for that of a mule, 20,000; and for that of a horse, 30,000; and for a steam-engine or a water-wheel, 40,000 may be assumed. But as the elements by which the labour of such machines is estimated are exceedingly variable, we calculate the size of pumps according to the quantity of water which is to be lifted by them. A man may lift by his arms a certain load eighty times 2 ft. high, and if he is to lift 80 gallons 10 ft. high in a minute, he must lift 1 gallon 10 ft. high with every stroke, or every motion of his body; and as his hands can move but 2 ft. high, he must either apply a lever of 1 : 5, or lift the same quantity of water which is in the space of the 10 ft. in height, only 2 ft. high. We have seen above that water in pipes should not move with a greater velocity than 3 ft. per second, and for practical purposes 2 ft. are preferable to 3. When water is to be lifted 10 ft. high eighty times in a minute, this will give a velocity of $\frac{80 \times 10}{60} = 13\ 3$ ft. this divided by 2 furnishes a motion nearly seven times too rapid for water in pipes. The dimension of the pipe must be such as to contain 1 gallon of water in 1·9 ft. of length. If now the piston or the cylinder is equally wide with the pipe, the man must be placed so as to make 2 ft. motion in producing 1·9 ft. in the pump. The piston or cylinder of a pump is generally made larger in diameter than the pipes, because the valve contracts the passage in small pumps at least to one-half, and the cylinder is for these reasons one-half wider than the pipes, which causes it to have twice the area of the pipe. The velocity of the piston is therefore half that of the water in the pipes, and amounts to $\frac{1{\cdot}9}{2} = {\cdot}95$ of a foot for each motion of the man. This ·95 of a foot in length of the cylinder must contain 1 gallon of water,

and as 1 gallon is $\frac{1}{8}$ of a cubic foot, the diameter of the piston must be, when a gallon is 215 in., equal to 5 in. In this calculation we have not estimated the loss of water caused by the valves. If we assume that this is $\frac{1}{4}$ of the whole amount of water raised by each stroke, the diameter of the cylinder must be 6 in. in order to furnish the 80 gallons per minute. To this pump a lever must be applied, at the longest end of which the man works. As his motion is 2 ft., the leverage must be $\frac{\cdot 95}{2}$, or nearly 2 to 1.

This calculation is applied to a height of 10 ft., and if the motion is only 2 ft., the area of the piston must be five times as large, or the stroke five times increased. If the height to which the water must be raised is 20 ft., the area of the piston can be half of that for 10 ft., or the stroke of the pump must be diminished as the height increases. Ten times the height of water requires a piston ten times less, and ten times smaller pipes for the same amount of water. As the areas are as the squares of the diameters, the diameter of a pump is inversely as the square root of the heights, or as the square roots of the quantities of water. Generally, the diameters of pumps are $D : d :: \sqrt{H \times Q} : \sqrt{h \times q}$, in which formula D and d are diameters, H and h heights, Q and q quantities.

Loss of Power in Pumps.—The loss of power in a pump is caused by the friction of the piston on the sides of the cylinder; friction in the machinery which sets the piston in motion; and friction of water in the pipes and valves, and impact. The friction of a good metallic piston is not more than $\frac{1}{10}$ or $\frac{1}{12}$ of that of the power applied. Leather, hemp, or india-rubber cause $\frac{1}{5}$ loss of the power applied. The loss by friction between cast iron and wrought iron is $\frac{1}{7}$ of the moving power; it is less between brass and iron. Iron is very much corroded by the water of a mine, and if the first cost is not considered, it is advisable to line the pump cylinders or plungers with brass. The height of a piston should be at least $\frac{1}{6}$ of the diameter for metal packing; and for steel rings at least $\frac{1}{8}$ of that length should be the length of the packing. The friction caused by those parts of the machinery which set the piston in motion is equal to that of the piston itself, when well made. All other losses, added to the above, increase the loss of power—in a good pump to one-third of the power applied; in ordinary pumps to one-half; and in ill-constructed pumps to still more than one-half.

Length of Stroke.—There must be a certain limit of the length of stroke; it is asserted that in the largest pumps the stroke should not be more than 8 to 10 ft., and in hand-pumps proportionately less. We have seen on what basis the stroke of a pump is calculated for any power. That rule, however, would make the stroke in heavy pumps too short. A consideration which has most influence upon the length of stroke is the loss of water through the valves, which amounts to a considerable percentage in pumps with large valves and short stroke; and as this loss is uniform, and is the same for the long or the short stroke, it follows that a long stroke offers advantages in this respect. Another consideration is the size of the piston-rods; here the advantage is in favour of the long stroke, because the force required to move a small piston is not so great as that to move a large one, and the section of the rod may be smaller for these reasons. The only objection to the long stroke is the loss of power by increased friction in consequence of the diminished diameter. This loss, however, is not serious, considering the advantages of the long stroke. In this respect the force-pump with a plunger has advantages over the lifting pump, because it has no valve, and its size may be equal to that of the pipes, while that of the lifting pump must be twice as large as the latter, and in very large pumps at least $1\frac{1}{2}$ times that of the size of the pipes. We see no serious objections to any length of stroke, which is not limited by practical considerations. It may be urged that long cylinders cannot be bored correctly; this is no serious obstacle, for a plunger may be turned 40 ft. long and be perfectly straight and round; and if the advantages of a long stroke are so favourable as to outweigh those of the lifting pump over the force-pump, there is no objection to the latter.

Piston-Rods.—In large and also in deep pumps, the piston-rod is an object of particular attention, and various means have been suggested to overcome the objections to long rods. This circumstance alone is sufficient to balance all the advantages which may arise from an inclined shaft. The pumps may be set vertically in all cases, but the pump-rods are subject to the direction of the shafts and drifts. In inclined drifts or shafts, a pump-rod is generally composed of a number of short rods, which are supported and connected by levers which rest on axes. In Fig. 2531 is represented a system of such rods. These are made of wood, mounted at the ends with iron. The whole system of these rods plays thus with the oscillating motion of the crank, and as they must be necessarily heavy, a great deal of power is lost by friction. Iron rods cannot be applied in these cases, because the distance from one support to the other must be made as long as possible. This is often, with wooden rods, 50 ft., and from that to 100 ft., for one length between two supports. An oscillating motion of any power may thus be carried to a considerable distance; it has been extended in old mines to many thousands of feet. In vertical shafts, similar pump-rods are used; of course these are not supported at certain lengths; the wood is screwed together, and if the depth of the mine is great, the rods are supported by chains slung over pulleys. In Figs. 2532 to 2534, we show the arrangement as it is commonly made. The pump-rods are of wood, carefully spliced, and secured by layers of timber and iron hoops. The sticks of which the whole length is composed are carefully straightened, hewn, and planed. We represent in the engraving three parts of the whole of a pump,—an upper part, Fig. 2532; a middle part, Fig. 2533; and a lower part, Fig. 2534. The mine may be of any depth; the form of the upper and the lower parts is always the same; the middle part is made longer or shorter, or the number of pulleys increased, as circumstances may demand. We see here the lower part of the whole set of pumps consists of a sucking and lifting pump, all the other parts, however many there may be, are force-pumps with plungers. The weight of the whole length of the piston-rods, plungers, and all the moving appendages, is here equal to the column of water, or to the united sectional surfaces of the plungers, inclusive of the friction of

the water in the pumps, and the friction in the machinery of the piston-rod. Hence the weight of the piston-rod will in its descent set all the pumps in operation, and the engine which drives the

2531.

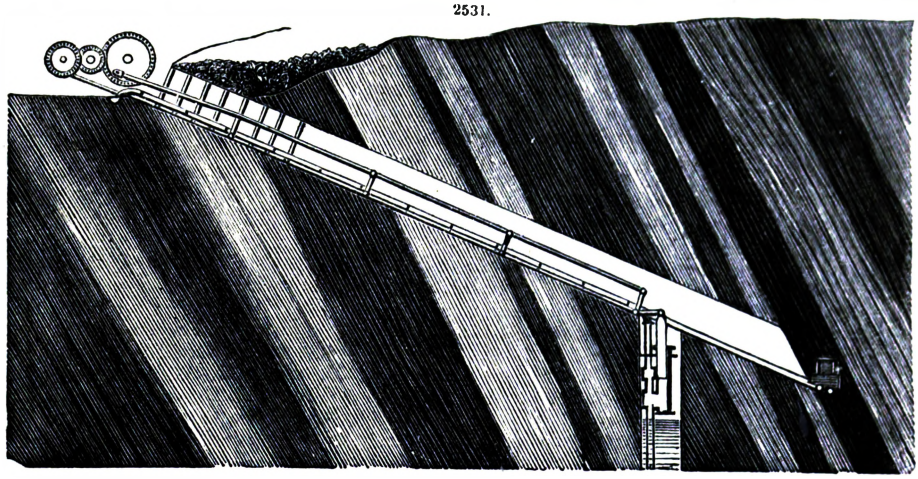

pumps has merely to lift the piston-rods. This arrangement is judicious, for by it the rods are prevented from receiving the pushing force, and it provides against vibrations. The rod has here to sustain the direct strain only; and as wood as well as wrought iron is strongest when the force is directly applied, the material is in this position used to the best advantage. Wooden pump-rods are in this case, as in most others, preferable to metal rods. We shall endeavour to explain the cause of this hereafter.

2532.

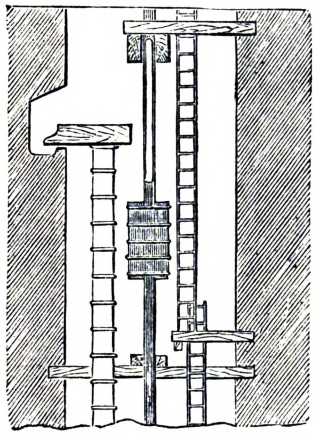

2533.

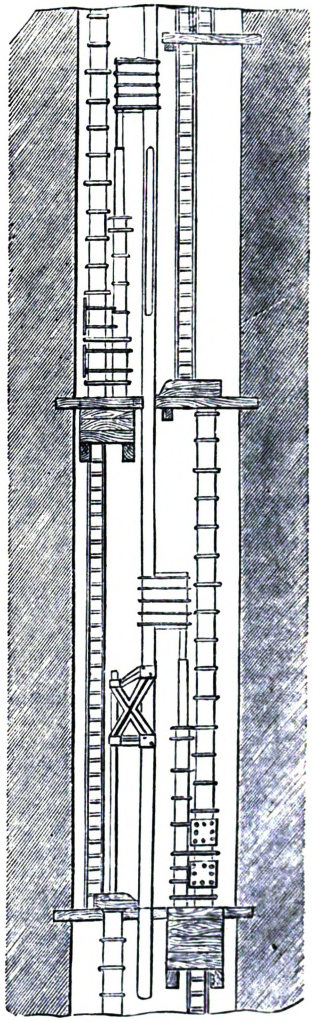

In the construction of pumps for deep mines, pump-rods form a most important particular. They frequently are the only cause why a succession of pumps is set one above the other, and if we endeavour to limit the number of pumps, we lose the advantage arising from working the pump by the gravity of the rod, or we are exposed to injurious vibrations. If we apply lifting pumps, we may raise a column of water to any height by one pump, but this requires generally ponderous piston-rods, and is soon abandoned, and the sets of pumps multiplied. This division of the whole height of a pump into various sets is in many respects advantageous; the rods and the pipes may be lighter, and all the machinery connected with them, so that a number of pumps of a certain height each is preferable to one pump extending the whole height. In all cases where the height of one pump exceeds the advantages which may be derived from the peculiarity of the material of

2534.

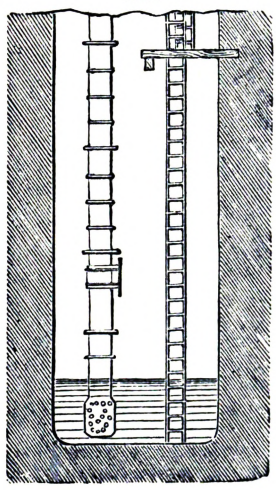

which the pump is constructed, we limit that height to the nature of the material. We have seen that cast-iron pipes of 6 in. in diameter cannot be cast thinner than ½ an inch. If we need pipes only 6 in. wide, it would be disadvantageous to take a less height for the pump than 150 ft., because cast iron of that thickness can bear the pressure of a column of water of that height. If the pipes are wider than 6 in., the height of the pumps must be diminished accordingly, or the thickness of metal increased. If the pump or pipe is 12 in. wide, the height can be only 75 ft., or the thickness of the iron must be 1 in. Are the pumps narrower than 6 in. in diameter, either the iron can be made thinner, or, which is preferable, the height of the pumps may be increased.

One set of pumps is not often made higher than 150 ft., and from that to 100 ft. Each set throws its water into a firmly-placed cistern, from which the next pump sucks it. The lowest set, or the lifting pump, is generally not very high, and seldom exceeds 40 or 50 ft. The water in mines contains always a large quantity of air, which is mostly thrown out at the first pump: if this air is permitted to pass into the next pump, an equal volume of water is replaced by air, and of course the pump does not throw so much water as calculated. The sucking part of the pump is for these reasons never very high, and often it does not exceed 8 or 10 ft. The pumps are lodged and fastened upon a part of the rock. In a vertical pit, this is excavated so wide as to admit the passage of the platforms and of the workmen; but the remainder of the space of the section is appropriated to the pumps. Such a projection extends often 3 ft. into the pit, which forms, when in solid rock, a strong chin or bracket. The cistern rests partly on this bracket; the largest part of it, however, is sunk into the rock, a chamber having been excavated, with a floor on a level with the upper edge of the bracket. The bracket is generally some few feet high, and the shaft below resumes its usual form. The division of a pump in deep pits has also other advantages, one of which is that of collecting the water from each height of a set of pumps. The water in coming down from above one of the cisterns is gathered into it by means of an inclined gutter cut in the rock, or fastened to it. If the depth of the mine is divided into various work-levels, the water from each level is gathered in the next cistern below it.

Setting of a Pump.—Whenever a shaft is sunk to such a depth as to require a pump; that is, if the use of the whim and the barrel cannot keep the mine dry, the first or lowest set of pumps is let down upon the bottom of the pit. It consists of a cylinder with a valve-piston, and forms a sucking and lifting pump. This is of a size sufficient for the whole depth of the mine, and when once lowered it is never raised again. It is suspended on two pairs of blocks or pulleys, as represented in Fig. 2535. It is well fastened above, so as to secure it firmly in its place, and the piston-rod, which is in the interior of the straight pipes, is secured by a stuffing box. The piston lifts the water high above the top of the pump. At the upper part of the highest pipe a leather hose is attached, in which the water is either conducted to the nearest cistern, in case there is already a set of pumps fastened in the shaft, or to the surface, and discharged. This flexible hose allows the pump to be gradually lowered, as the bottom of the pit is sunk deeper by the workmen. In some cases the lower part of the pump—that is, the pipe with the basket—is replaced by a piece of strong leather hose, which is flexible, and may be put into any pool in the bottom of the pit, the workmen having previously made a cavity for gathering the water. In the drawing we represent the basket which dips into the water as composed of parallel rods, instead of round holes bored into the pipe. These oblong cavities do not fill so soon with débris of rock, and may be made narrower, affording still a larger passage for water than round apertures. In some instances the lowest part of the pipe is provided with a trumpet-shaped mouth, and a basket is attached to the pipe. The latter arrangement offers more basket surface, and is not so liable to be filled by particles of rock as the pierced pipe.

2535.

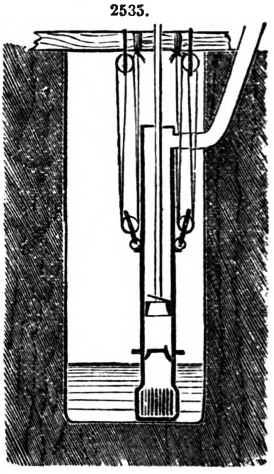

Proposal of a New Method for Setting Pumps.—Most of the mines in the United States are not very deep, seldom more than 300 or 400 ft. Those of the latter depth are very few; most of them also are little below the water levels of the country, and many years may elapse before miners are compelled to extract mineral from deep ones. Many of the mines, however, contain large quantities of water, which prevents the working of them. The means required to erect an expensive pumping machine are comparatively great, and in most cases it is not certain that the mines will repay the expenses incurred; we therefore propose the following arrangement, which may in some instances facilitate the working of a profitable mine, now dead for want of means to construct a sufficient number of pumps.

Any mine may be worked by means of inclined shafts, and if they interfere with the erection of common pumps, and also with the hoisting apparatus, the difficulty may be remedied if the machinery is adapted to the peculiar form of the shaft. The excavating of an inclined drift or shaft is on the whole not more expensive than that of a vertical shaft; its length is greater, but the work may be performed with more ease and on lower terms for the removal of the same amount of rock. We represent in Figs. 2536, 2537, this system, and shall point out its advantages presently. Fig. 2536 shows an inclined shaft, whose slope may be more or less than 45°, but in all instances it should be sufficient to admit of the use of carriage platforms on which the cars from the galleries may be driven and hoisted as they come from the workrooms. The shaft has the width for one track of railroad, calculated to carry as much mineral as the mine may furnish; the platform being of sufficient size for taking as many cars as may be required for one trip. The hoisting is therefore done all on one track, and as a wire rope may be made sufficiently strong for any load, no matter how heavy, there is no objection to its hoisting all the mineral on one platform. The platform thus travels up and down on the same track, which causes apparently a loss of power, but not in

reality, as we shall see presently. The wire rope which passes around a guiding pulley below, is wound upon a drum on the top of the slope, or it may be conducted over a grooved pulley and

2536.

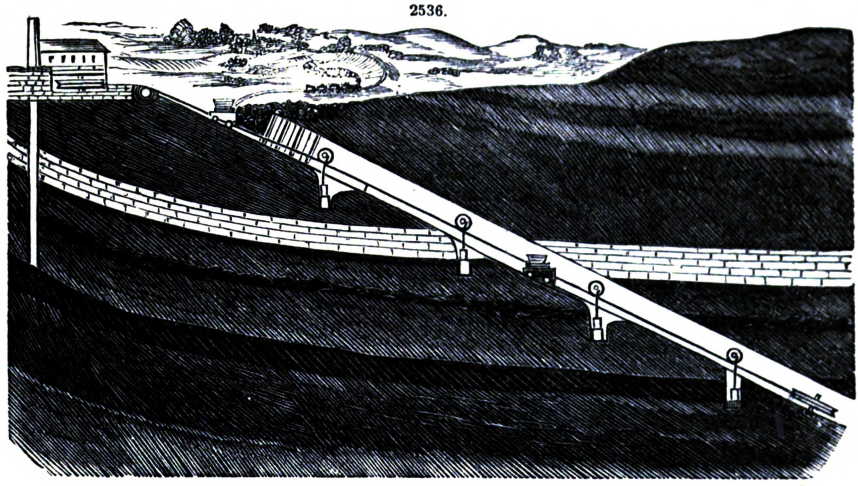

2537.

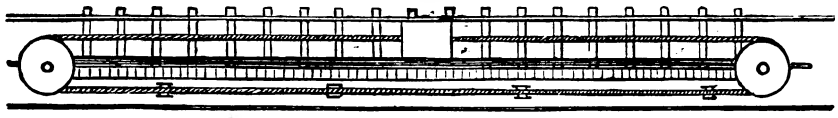

worked by adhesion. A drum connected with the engine at the top, upon which the rope winds, has great advantages in respect to the durability of the rope, but where economy in first cost is an object to the miner, the grooved pulley may answer the purpose. One half of the shaft is allotted to the pumps and the stairs by which the miners descend and ascend. That part in which the pumps are distributed is more distinctly shown in Fig. 2537. We see there the wagon-track for the platform, and a number of pumps distributed along the second rope. At each pump is a pulley, around which the wire rope is slung, and this drives the pump. We represent in the drawing the pumps as sunk in the ground; there is no necessity for doing this; they may be laid on the floor of the drift or posted upright. As to rotary pumps, any kind which will furnish most water by the application of the smallest power is right. One condition, however, must be observed in determining on the plan for these pumps; that is, the rope travels backwards and forwards, and the pumps must work to both motions. Pumps which are driven by a crank offer no difficulty in that respect, although some kinds of rotary pumps work only in one direction. Any number of pumps may be employed with the greatest facility; and if expense is a consideration, the cheapest kind of pumps, those which throw water but 40 or 50 ft. high, may be used. If, in the course of the work, it is found that the pumps in operation are too small for the labour assigned to them, an addition to their number may be made instead of throwing the old pumps out. The leading principle is here to employ a large number of small pumps, of limited lift, instead of only a few reaching to a great depth, and lifting with each set to the height of 150 or 200 ft.

2538.

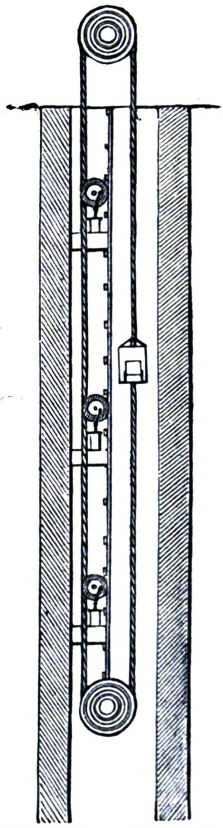

This system of working a mine is not confined to the slope; it may be used to equal advantage in the vertical pit or horizontal drift, as is shown in the following figure. The inclined pit is, however, cheaper than the vertical one; and as the objections to it are removed by this kind of machinery, we consider it to be the most advantageous form for hoisting, pumping, and ventilation. If this inclined pit is of the same size as a vertical pit, and if its length is greater than the latter, it may be excavated cheaper, particularly in stratified rock. A cubic yard of a vertical pit will cost at least twice the price of a cubic yard in the horizontal drift; and if the work in the slope cannot be done quite as cheap as in the drift, it will cost but little more. In all instances there is not much more room required in the slope than in the shaft.

In Fig. 2538 we represent the same principle adapted to a vertical shaft. In fact it does not make any essential difference if the system is applied either to the one or the other form of entrance. The chief objection to the vertical shaft is its admitting only a small platform, which, even if it takes as much mineral as the large platform of the slope, or that of the drift, it requires more time to unload. Assuming that in most, if not in all cases, the dog-cart is the most profitable in our mines of limited extent, that

cart must be admitted upon the platform at once, and also easily removed. When a large quantity of mineral, such as coal, is to be hoisted, a number of carts must find room at once on the platform, without being much crowded. It is not objectionable to make the platform of an inclined plane in the form of steps, so that it may afford a large area. To this arrangement there is, however, some objection in the vertical pit, because it would require a high tower to bring all the platforms, if more than one, above ground and unload them with dispatch. It needs scarcely to be stated that the rope which drives the pumps requires no greater strength than is necessary for that purpose. Either rope, it may be that for hoisting or for pumping, has its peculiar size. Both ropes need not be of equal size.

In respect to ventilation, this system offers peculiar advantages. Where no air-shaft can be located conveniently a blower may be placed at the bottom of the pit, and driven by the guide-pulley. The changing rotation of that pulley is no objection, for if a common fan-blower with radial vanes is employed, it does not make much difference which way it is driven. The blower is here at the best place in the whole mine. The air is here heaviest and of most force.

Various Forms of Pumps.—In conclusion, we furnish various forms of pumps now in use, and select such specimens as are most suitable to secure the desired effect with the least labour and expense. When water is to be lifted only 2 or 3 ft., the use of the common water-bucket is about as profitable as any instrument we could apply, particularly if no other motive power but that of man can be employed. If circumstances admit of the use of animal power, or water, or steam-engines, these of course are preferable to human labour, because they are cheaper. If a unit of power is represented in that of a horse-power in the steam-engine, which is by general agreement 33,000 lbs. lifted 1 ft. high per minute, and we calculate the cost of that unit in the various means by which machinery or pumps may be driven, we find the expenses for one hour as follows;—The cost of that unit of power in a water-wheel is very small, and amounts to the interest on the capital invested. If we neglect this item in all cases, which properly may be done, because it is variable and depends chiefly on localities, we find the cost of one horse-power in the water-wheel per hour a mere nominal sum. The same unit causes in a Cornish steam-engine the use of 3·5 lbs. of coal, to which the wages of engineer and fireman, and also the cost of repairs must be added, which may increase the expense about 1 cent per hour in large engines, and 2 cents in small engines. The price of coal is very variable in the United States, and so must be the cost of power in a steam-engine. A common engine with crank and fly-wheel, well made, and of at least 100 horse-power, will consume 5 lbs. of coal for the same power. A steam-engine of less power and high pressure, will consume 10 lbs.; and a small engine, of from 15 to 20 lbs. of coal per hour and per horse-power. The actual cost may be little more than 1 cent in the best engines, and about 10 cents in small engines and with high-priced fuel. A unit of power will cost in a horse from 20 to 50 cents; in the ox and mule about the same. Human labour will cost at least $1 for the amount done by the water-wheel for nothing, and by a good steam-engine for 1 cent. As the lifting of water is an operation which requires constant and in most cases great power, it is well worth while to give close attention to the engine which drives the pumps, and to the construction of the pumps also.

2539.

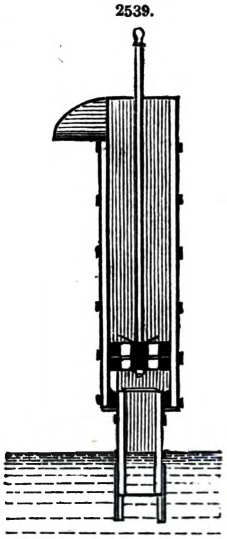

If water is to be lifted only 10 or 12 ft. high, wooden pumps may answer the purpose; but as in this instance a saving in the cost of labour is of importance, the common wooden pump will not answer. Where only a small quantity of water is to be lifted, the common hand-whim or horse-whim is used, together with the barrel or kibbel, the use of which is limited to small mines or small quantities of water. A wooden pump is represented in Fig. 2539. It is constructed of 2-in. plank, and well provided with iron hoops for securing its joints. The lower part of the pump has a short sucking pipe, and some projections to sustain the lower extremity above the bottom of the pit. This sucking pipe, which may be 2 ft. long, is required to prevent fragments of stone from entering the valve and pump, because these will drop in the downward stroke of the pump when the water is at rest in the sucking pipe. The piston is a block of wood through which some auger-holes are bored. The piston-rod may be either of iron or wood; in the latter case it should be mounted with iron, in order to fasten it firmly to the piston. The valves are made of sole-leather, or, what is better, vulcanized india-rubber, provided on the upper side with a piece of sheet metal, riveted to the leather. The latter must be large enough to cover the whole area of the opening, to prevent injury to the leather. These pumps may be made 12 in. square inside, and even wider than that, but it is not profitable to make them less than 6 in. square. Water cannot well be lifted with these pumps to a greater height than 12 ft.

Spring-Poles for Pumps.—The means by which to cause the oscillating motion of a pump piston are various. The crank appears to create the most imperfect motion, for any pump to which it is applied furnishes less water than when other means are used. Human labour is generally applied to a lever of unequal lengths, on the longer part of which the moving power acts. This appears to be the most profitable form of applying the power to common pumps. On board the flat-boats, on the Western rivers, a kind of square pump is in use, which is very imperfect so far as the pump itself and valves are concerned, but a man may throw a large quantity of water with one of them. These pumps are provided with a spring-pole instead of a lever. We have found this to be an efficient means of conducting power to the pump, and consider it the cause of the large quantity of water raised. In adapting spring-poles to other pumps, the quantity of water raised is greatly augmented. The arrangement is in this case as represented in Fig. 2540. The rationale of this operation is as follows. When the elastic spring-pole is depressed with the piston to the lowest

point, the depressing force relaxes, and the pole returns to its former position, lifting the whole column of water by its elasticity. The change of motion is here very sudden, and tends to close the valves quickly, so that not much water can return through them. The rod, in moving the column of water with a great velocity, will mount to a higher point than actually belongs to it when at rest, and return from that elevation quickly. This returning motion may be assisted by the moving power. The sucking valve also is here forced to shut quickly for the same reason as the piston-valve. Another advantage may be found in the mode of applying the muscular powers; the upward stroke being performed by the rod, the muscles of the men are free to relax and gather fresh energy for the next stroke. We allude to this as an important aid in the motion of pistons in pumps. This spring-pole produces quite the reverse of the crank motion, when the latter is converted into linear motion. A quick change is caused by the elastic spring-pole, and a slow change by the crank. If the same power and pump furnish more water when worked by means of the first than by the latter, the principle involved in the motion of the first must be more correct than in the latter. This applies, of course, to pumps generally. In constructing pumps, and particularly the connection between the moving power and the piston, we should apply this aid in all cases. When the pump is driven by horses, oxen, a steam-engine, or a water-wheel, which power cannot be employed like that of intelligent men, we should apply that force to an elastic medium capable of producing a similar motion as the spring-pole. We indicate in the drawing the application of a uniform rotary motion, by means of cams to the piston-rod itself. This may be adapted to a communicating lever, or a prolongation of the spring-pole; but in no case will it work to advantage when applied to the spring-pole itself, at a place between the pump and the fixed point of the spring-pole. It is not necessary, and is also impracticable, to employ a spring-pole at large and permanent pumps, but by whatever means the motion is produced, it should be of this nature. The elastic medium has an improving and regulating effect upon the action of a pump. In attaching steam-power to a pump it is therefore proper to dispense with the fly-wheel, and apply the steam directly to the piston-rod, or a rigid connection with it. We observe here that an elastic piston-rod will be productive of the reverse effect produced by the spring-pole.

2540.

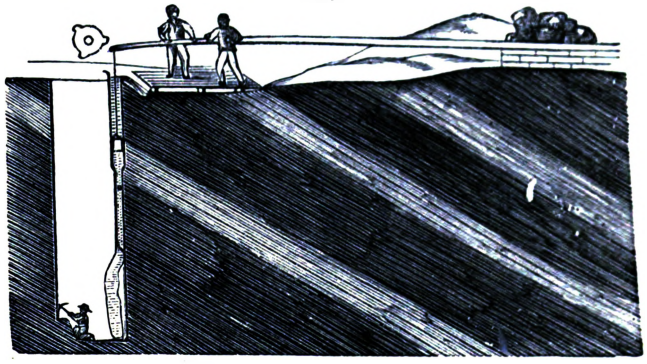

In Fig. 2541 we represent a lifting pump, composed of iron pipes, and a wooden piston-rod; the latter is shod with iron, where it is connected with the piston. In Fig. 2542 are two sections of the piston, the packing of which may be taken out and put in from below, so that both sucking valve, lifting valve, and packing are accessible from the one valve chamber, and the piston rod need not be drawn when anything happens to the piston, or when the packing or valve is to be replaced. The packing is here protected against coarse sand and stones by the upper part of the metallic piston, which is made so large in diameter as to close very near to the sides of the pump. A strong iron hoop is bent over the sucking valve in the form of a protecting arc, in order to prevent injury to that valve by the piston, in case it should drop.

2541.

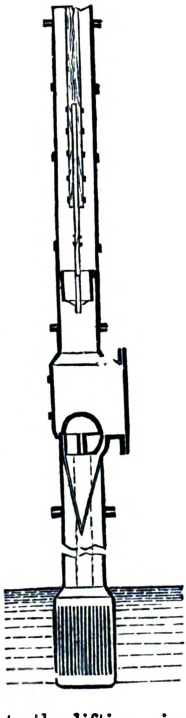

2542.

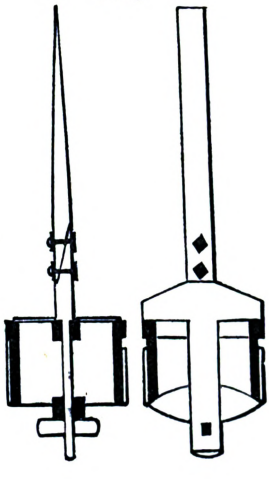

2543.

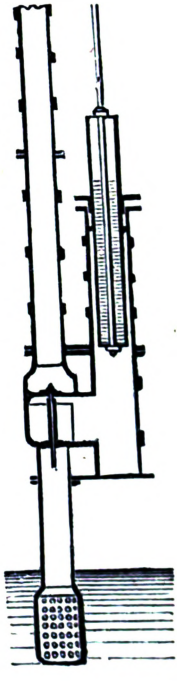

In Fig. 2543, we represent a forcing pump with a descending plunger, which may be considered a specimen of a good pump of this kind. The weight of the plunger, which may be modified by inserted weights and piston-rod, is here calculated to force the water into the lifting pipe. As the changes of such a heavy rod cannot be aided with a spring-pole, the valves must not open too far or they will be liable to lose much water.

The packing of the stuffing box may be hemp; vulcanized india-rubber is however better; leather is frequently used, but anti-friction metal or brass is preferable to either. The sucking pipe is never very long in these cases, that it may not lose much water by the liberation of air from the water.

Fig. 2544 is a drawing of a pump of the largest kind; the sucking valve is represented as being open, and the forcing valve shut; the piston is half-stroke, and ascending. This kind of pump works very advantageously owing chiefly to the peculiar arrangements in the valves. As this is an object of importance, we furnish the valve in various figures, which represent sections and views of it. Fig. 2545 shows a vertical section of the valve when open; the movable part, as is seen, rises to a small height only, and consequently shuts very quickly, affording a large passage for

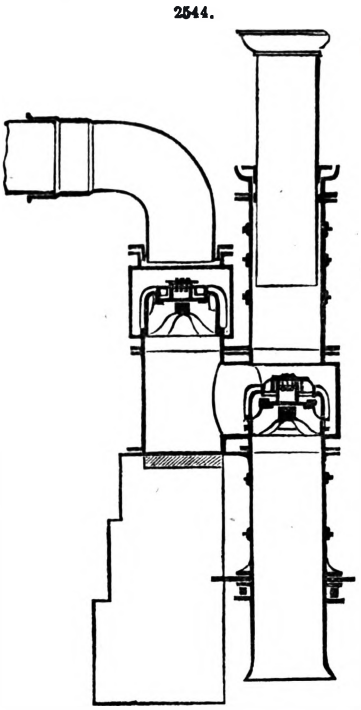

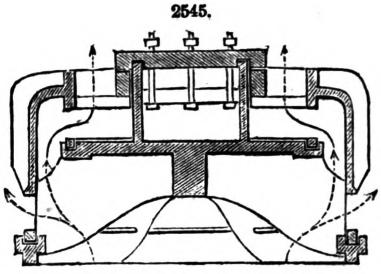

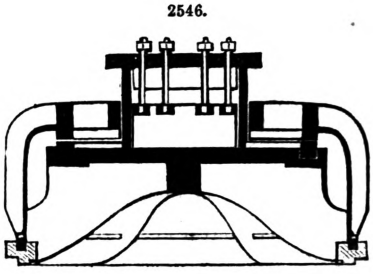

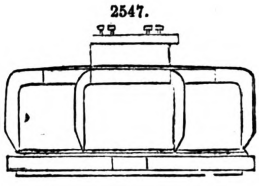

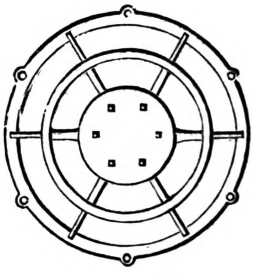

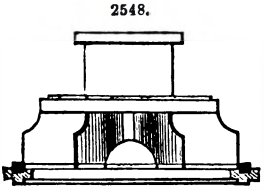

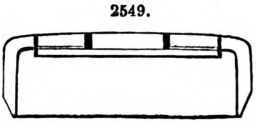

water. In Fig. 2546 the valve is represented as shut. Fig. 2547 shows a view of the valve shut. Fig. 2548 is a section of the immovable part of the valve; and Fig. 2549 a section of the cap or valve itself. Fig. 2550 is a view from above. See ARCHIMEDIAN SCREW. ARTESIAN WELLS. BORING AND BLASTING. COAL MINING. CONSTRUCTION. COPPER. FLOAT WATER-WHEELS. IRON. LEAD. PUMPS AND PUMPING ENGINES. TIN. VALVES.

DRAINAGE AND STENCH TRAPS. FR., *Puisards d'écoulement*; GER., *Senkgruben*; ITAL., *Valvola a tenuta d'aria*; SPAN., *Aparatos inodoros.*

See TRAPS, *Drainage and Stench.*

DRAWBRIDGE. FR., *Pont-levis*; GER., *Zugbrücke*; ITAL., *Ponte levatoio*; SPAN., *Puente levadizo.*

A bridge of which either a part or the whole is made to be raised up, let down, or drawn or turned aside, is termed a *drawbridge*. The movable portion, or draw, is called, specifically, a bascule, balance, or lifting bridge, a turning, swivel, or swing bridge, or a rolling bridge, according as it turns on a hinge vertically, or on a pivot horizontally, or is pushed lengthwise on friction rollers.

The bridge shown in Figs. 2551 to 2554 is a rolling drawbridge, designed by C. T. Guthrie, for military purposes, for which it is well adapted. However, drawbridges for civil use constructed on this principle may be applied with much advantage.

The bridge is formed of two rolled or built wrought-iron girders, covered with planking, and supported at their centres by cast-iron struts; these are suspended by links in such a manner that while the upper ends of the struts accompany the bridge in its motion, their lower ends travel nearly vertically against the escarp wall. Thus their centres of suspension, which are also their centres of gravity, descend in circular arcs, whilst their upper ends which support the bridge ascend in arcs of a certain curve. The weight of the struts is thus opposed to the weight of the bridge, and the position of their points of suspension, their angle of inclination, and weight, and

the form of the racers against which their lower ends travel, are such that they balance the weight of the bridge in every possible position, without any waste of material. It follows from this that the force required to move the bridge is exceedingly small, being due only to the friction on the axles.

2551.

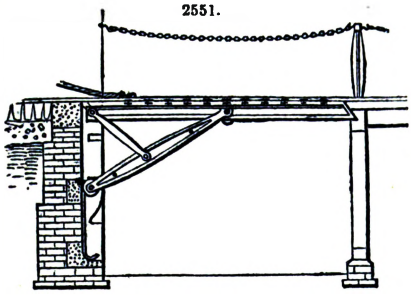

2552.

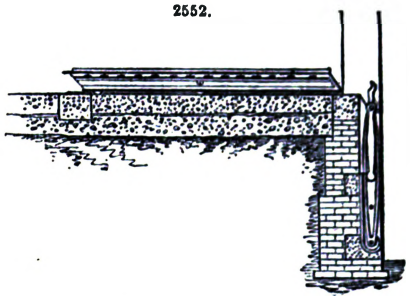

2553.

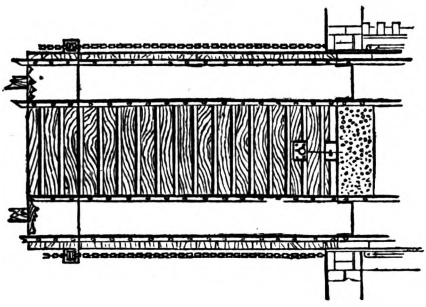

2554.

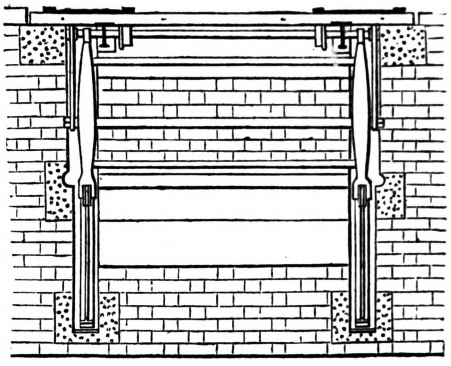

The diagram, Fig. 2555, is to illustrate the method of finding the proper curve to give the racers, in order that the bridge should be balanced in every position; it also shows the path of the

2555.

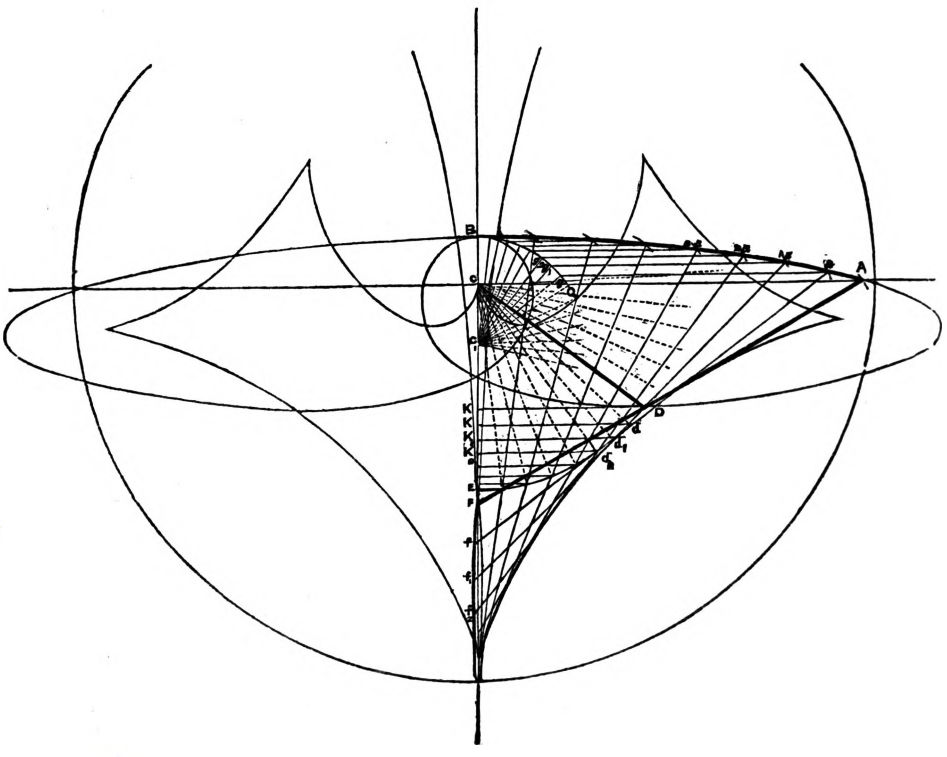

centre of gravity of the bridge. It is unnecessary for any practical purpose to find the equation to these curves; suffice it to say that the first is compounded of the equation of a circle and its diameter, and the second of the equation of an ellipse and its diameter, and that while one centre is moving diametrically, the other is moving perimetrically.

The constructive method of finding the proper curve for the racers is as follows;—

While the centre of the bridge ascends in the arc A B, the centres of the struts descend through the arc D E. Now as the struts are to balance the bridge in every position, the relative vertical rate of motion of their centres must be inversely as their respective weights. Draw the horizontal lines A C, D K, then the weight of the bridge is to the weight of the struts as K E is to C B, and the centre of the bridge must pass vertically from C to B at the same relative rate at which the centre of the struts passes from K to E. Draw the sector B G C_1, similar to the sector C D E, and divide the arcs B G and D E into the same number of equal parts, and draw the horizontal lines $g\,a$, $g_1\,a_1$, $g_2\,a_2$, and so on, $d\,k$, $d_1\,k_1$, and so on. Then it is evident that if the centre of the bridge rises successively to the levels g, g_1, g_2, and so on, while the centre of the struts falls to the levels d, d_1, d_2, and so on, respectively, the conditions of equilibrium will be fulfilled. So from the point d, with a radius D A, describe an arc cutting the line $g\,a$ in a, join $a\,d$, and from d, with a radius D F, strike an arc cutting $a\,d$ produced in f, then f is a point in the required curve. Similarly f_1, f_2, f_3, and so on, may be found. The part of the curve taken for the racers deviates very slightly from a straight line.

The most convenient proportion to make the several parts of a bridge of this description, which may vary in length from 10 to 40 ft., is perhaps to give the struts an inclination of 30°; to make them half the weight of the bridge, and to cause their centre of gravity to descend, as the bridge is rolled back, twice the space the bridge itself has to ascend.

Along with simplicity and cheapness of construction this military drawbridge fulfils the following necessary and important conditions;—1. The bridge is not greater in length than the opening intended to be spanned; 2. When the bridge spans the opening it is flush with the roadway; 3. It does not involve any alteration in the construction of the roadway at either side of the opening; 4. The force necessary to move it is so slight that any assistance from machinery is in most cases unnecessary; 5. A single action is sufficient to move it; 6. When the bridge is rolled back no part of it is exposed to damage by fire from the flanks; 7. Where gates are used in connection with the bridge, it is capable of being rolled in either direction while they remain closed; 8. When the bridge is rolled in and the gates closed, no ledge is left to assist an enemy to bridge the opening.

2556.

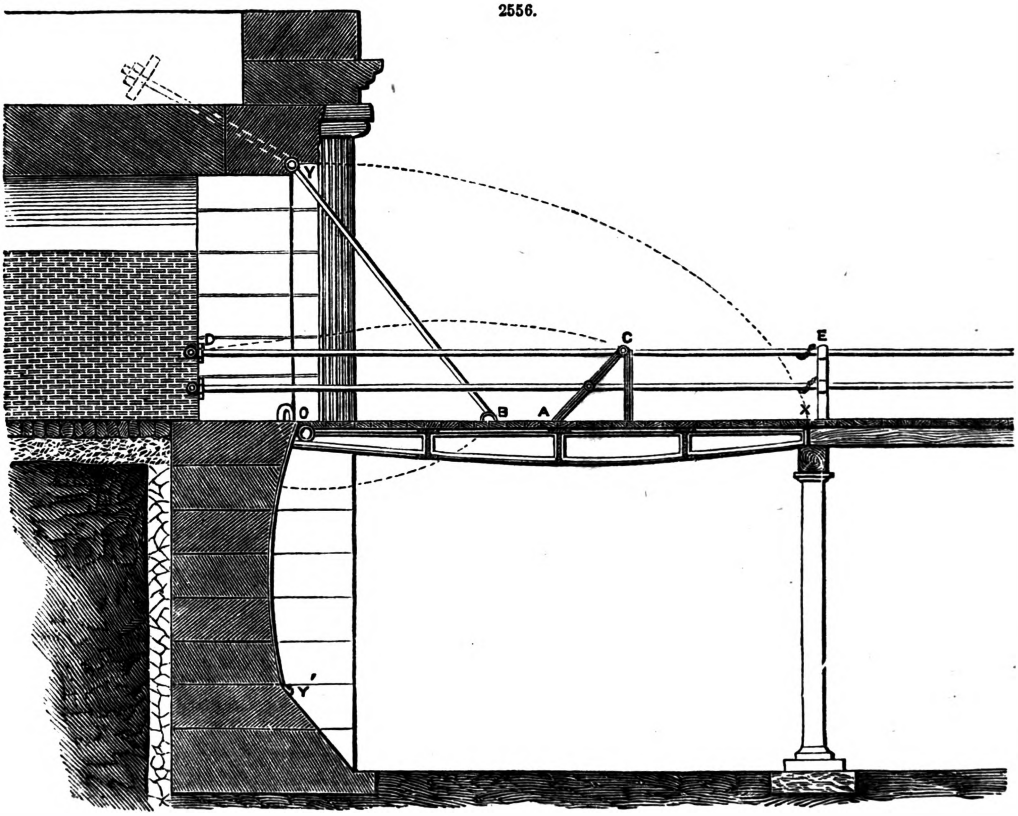

Figs. 2556 to 2558 represent an equilibrium drawbridge by J. C. Ardagh, R.E., in which no counterpoises are required; the diagram, Fig. 2559, shows how this equilibrium of the bridge in every position is attained. The platform $x\ y\ x'\ y'$ is suspended to the points Y Y by the rods Y B,

and its inner extremity $x'y'$ bears by means of flanged wheels on rails $O\,x'\,y'\,Y$, curved in such a manner that the centre of gravity of the platform A shall move on the horizontal line X X', thus securing equilibrium in every position. The curve may be drawn graphically, or calculated from the following equation:—

$$x' = \sqrt{r^2 - \left(p - \frac{a\,y'}{a+b}\right)^2} - b\sqrt{1 - \left(\frac{y'}{a+b}\right)^2}.$$

2557.

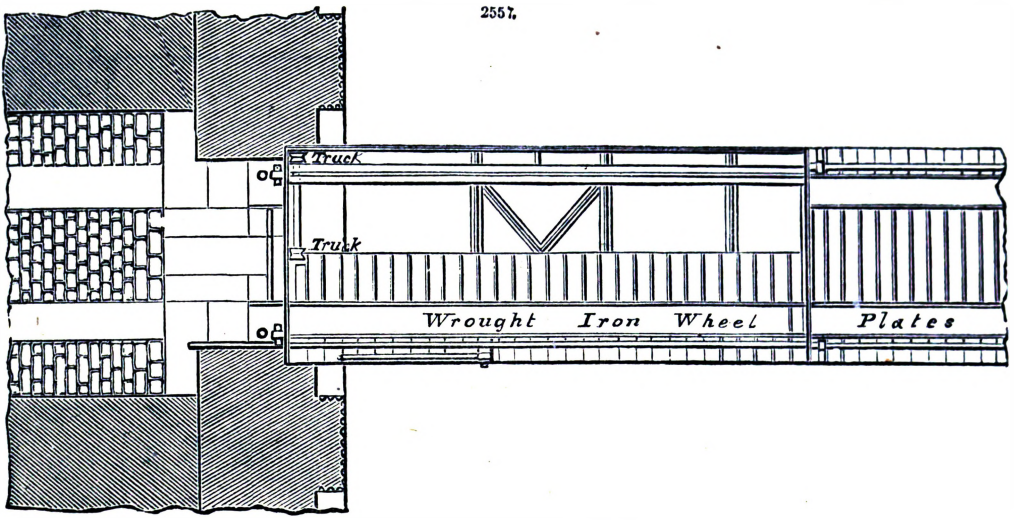

2558.

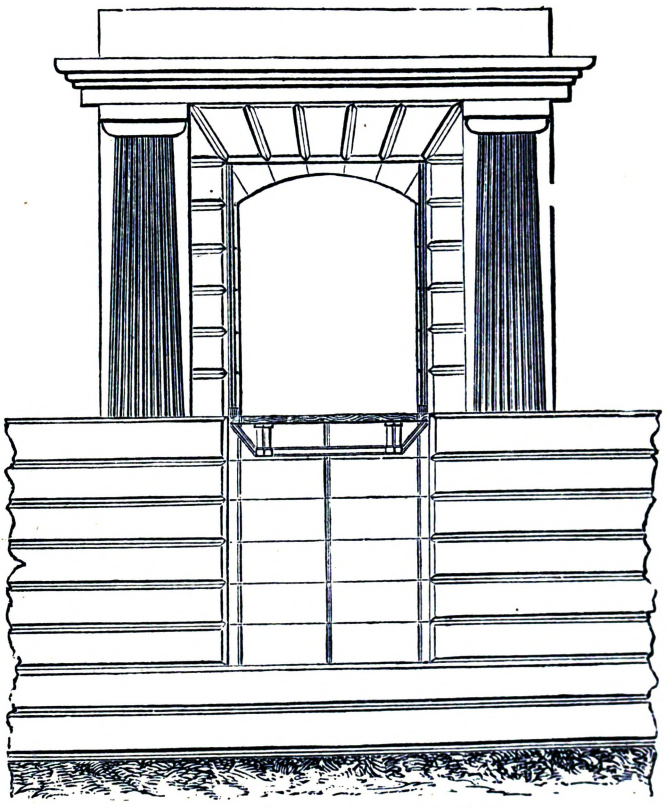

When the centre of gravity bisects the span, and the point of suspension meets the outer extremity of the bridge when raised, $a : b : (c = p) : r :: 1 : 3 : 4 : 5$.

The smaller diagram, Fig. 2560, shows the mode of applying this principle to dock or canal bridges, where its compactness and lightness are advantageous.

Fig. 2561 shows an ordinary drawbridge with a very simple description of counterpoise, also invented by J. C. Ardagh, R E. The weights which balance the bridge when in a horizontal position are attached to pulleys working on slings of chain or wire-rope which constrain them to move in an elliptical curve, and preserve the equilibrium of the bridge in every position. The theoretical curve, which is a sinusoid, may be graphically described by the construction shown in dotted lines, Fig. 2561; and the foci of the ellipse, which most nearly coincides with it, will indicate the points of suspension of the sling.

2559.

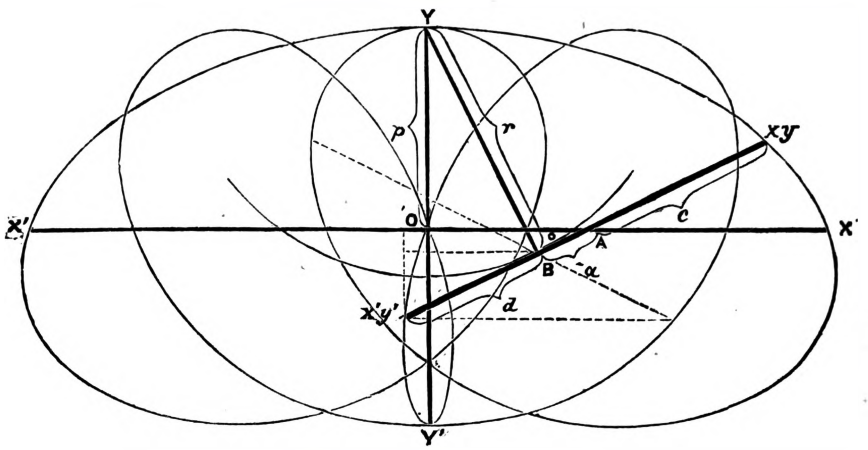

2560.

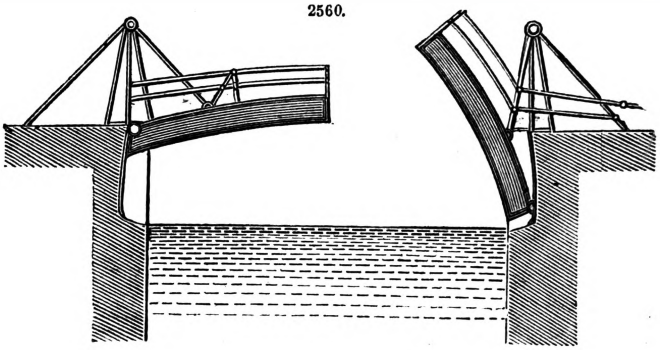

2561.

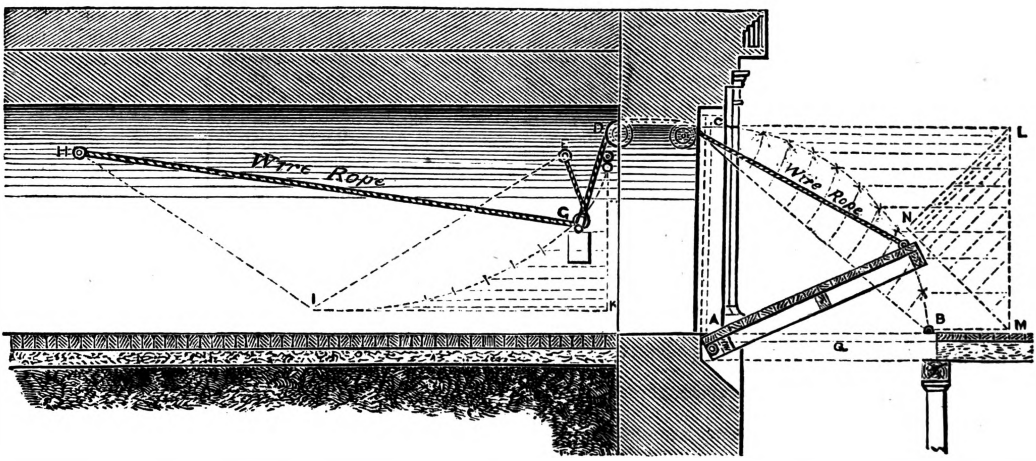

A *Weigh-bridge* is an apparatus employed for weighing conveyances. The platform A B, Fig. 2562, on to which the vehicle is drawn, rests on four feet, a, b, a_1, b_1, upon as many levers, C D, C′ D′, C_1 D_1, C'_1 D'_1, movable round the points C, C′, C_1, C'_1, respectively; which rest by their free extremity D, D′, D_1, or D'_1, upon a cross-bar T T; this bar rests at the point I upon a lever H K, movable round the point H. The extremity K of this lever is united by a vertical rod K L to the smaller arm of a balance, movable around the point O, and bearing upon its longer arm a sliding weight p. The distance O X = x, at which it is necessary to place the sliding weight in order to retain the beam in a horizontal position, gives the measure of the weight P of the conveyance.

The points C, C′, C_1, C'_1, are equidistant from the cross-bar T; the same with the points a, b, a_1, b_1, on which are placed the four feet of the platform. It follows, first, that in every position of the apparatus the platform remains horizontal. Let us suppose, then, that the relation of C a to

C D is that of 1 to n; if the cross-bar be lowered to an extent h, each of the points a, b, a_1, b_1, will be lowered by $\frac{h}{n}$; the platform will then remain horizontal, and will be lowered by $\frac{h}{n}$. Let us next suppose that the relation H I to H K is that of 1 to n', the point I being lowered by h, the point K will be lowered by $n'h$; and the same will take place with the point I. Then the point X will be elevated to an extent indicated by $n'h\,\frac{OX}{OL}$, or $n'h\,\frac{x}{l}$, calling l the distance O L. This being settled, let us apply to the system the principle of virtual velocities. The effect of the weight P is $+\frac{Ph}{n}$. The virtual velocity of the weight p is $-p\,.\,n'h\,.\,\frac{x}{l}$. The *virtual velocities* of the reactions of the resting points O, H, C, C', C_1, C'_1, are = 0, if we overlook the friction, as it is allowable to do when the contact is everywhere maintained by a knife-edge. Besides, the other forces which act upon the system are mutual forces, equal two and two, and of contrary signs, and whose virtual velocities disappear on computing their sum. There will then remain $\frac{Ph}{n} - pn'h\,\frac{x}{l} = 0$, whence $P = p\,.\,nn'\,.\,\frac{x}{l}$.

If, for example, we have $n = n' = 10$, and $p = 1\,k$, it will result that $P = 100\,k\,.\,\frac{x}{l}$.

2562.

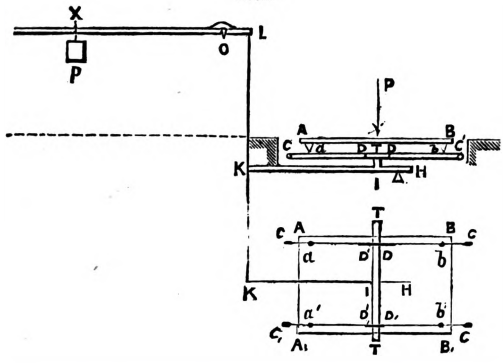

2563.

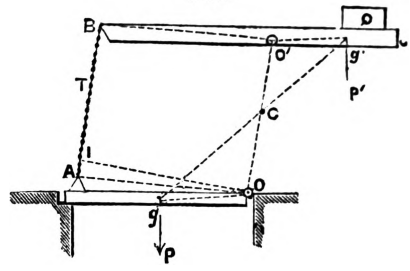

The drawbridge represented in Fig. 2563 is composed of a platform O A, movable around a horizontal axis O by means of strong pivots, the coussinets of which are fixed on the side of the scarp. Two chains, of which only one, A B, is seen in the figure, attach the anterior portion of the platform to two plyers B C, movable round a horizontal axis O', united to one another by cross-beams and a St. Andrew's cross, and having at the back part a counterpoise Q, usually of stone. The apparatus is so arranged that if we join the points of attachment A and B of the chain to the points O and O', we obtain a parallelogram A B O' O, attached at its four angles, and which does not cease to be a parallelogram when the position of the platform is altered, seeing that its opposite sides remain equal.

Further, if g is the centre of gravity of the platform, and g' that of the system formed by the beams and their counterpoise, the weight Q and its position are disposed in such a manner as that by joining g O and g' O', we have two parallel right lines; these right lines remain parallel when the position of the platform is changed, seeing that they make equal angles with A O and B O', which remain parallel. Finally, the weight P of the platform and the weight P' of the system of the beams and their load are so regulated as that there may be equilibrium in every position of the drawbridge. To this end, let T be the tension of one of the chains, and let α be the angle which the two right lines g O and g' O' make with the horizon in any position whatever of the apparatus. The platform is a lever of the second kind, subject to the forces T, to the force P, and to the reaction R, exercised upon the axis O; taking the momenta of these forces in their relation to this axis, and putting aside the friction, we shall then have $2\,\mathfrak{M}\,T = P\,g\,O\cos.\,\alpha$, the character $\mathfrak{M}$ designating the momentum of the force T. The beams form a lever of the first kind, which in the same way gives

$$2\,\mathfrak{M}\,T = P'\,g'\,O'\cos.\,\alpha. \qquad [2]$$

Comparing the relations [1] and [2], we obtain

$$P\,g\,O = P'\,g'\,O', \text{ whence } \frac{P'}{P} = \frac{g\,O}{g'\,O'} \qquad [3]$$

a relation which is independent of the angle α, and which will take place in consequence in any position whatever of the drawbridge, provided that it takes place in a particular position, for example, in the position where the platform is horizontal, or where $\alpha = 0$.

Either of the relations [1] or [2] will give the tension T; it will be sufficient to make $\alpha = 0$, and to replace $\mathfrak{M}\,T$ by T O I, the factor O I being the perpendicular let fall from the point O, or the point O' upon A B. We shall thus have $2\,T\,O\,I = P\,g\,O$, whence $T = \frac{1}{2}\,P\,\frac{g\,O}{O\,I}$.

The reactions upon the axes O and O' will be obtained in the same way as for the lever, that is,

by bringing in the forces T and P, or T and P'; composing these two forces by the parallelogram of forces, and taking the resultant in a contrary sense.

It will be observed that if we join $g\,g'$, the point G when this right line will meet O O' will be the centre of gravity of the system of the weights P and P'. For the triangles g O G and g' O G' being similar by reason of the parallelism of the right lines g O and g' O', we have

$$\frac{G\,g}{G'\,g} = \frac{g\,O}{g'\,O'} = \frac{P'}{P}. \qquad [4]$$

The point G remains immovable in every position of the platform, for the same triangles give

$$\frac{G\,O}{G\,O'} = \frac{g\,O}{g'\,O'}. \qquad [5]$$

In some cases another arrangement, invented by M. Delille, which is founded on a different principle, has been adopted. The chains are replaced by straight rods A C, Fig. 2564, which are attached to the extremities of the axis of a horizontal cylindrical roller, which is made to move upon curves M N. Let us suppose the weight P of the platform to be resolved into two parallel forces ½ P applied, the one at A, the other at O. Let P' be the weight of the roller, and let g be the point of application of the resultant of the forces ½ P and P', or, what amounts to the same, the centre of gravity of the system of the weights ½ P and P'. The curves M N are so described, that on moving the drawbridge, the point g describes a horizontal H H'; it follows from this that the system is an equilibrium in every position. In fact, the *virtual velocity* of the force ½ P applied at O, and of the reaction exercised on this axis, is zero, since their point of application is not displaced; the virtual velocity of the reaction exercised on the roller by the curves M N is zero, because that reaction being normal to the curves is perpendicular to the elementary line described by its point of application. There remains the virtual velocity of the forces ½ P and P' applied, one at A, and the other at C, or, which amounts to the same, the velocity of their resultant applied at g. Now this resultant is vertical, whilst the elementary line described by the point g is horizontal; its virtual velocity is then constantly zero. Thus the sum of the virtual velocities of all the forces applied to the system remains nil in any position whatever of the drawbridge, the system is then constantly in equilibrium. To trace the curves M N, Figs. 2564, 2565, we commence by deter-

2564.

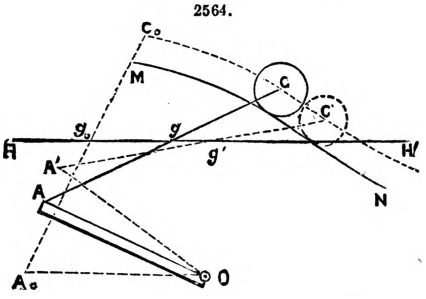

2565.

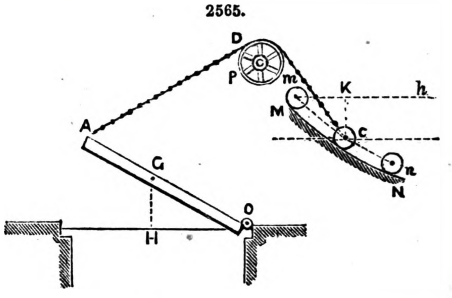

mining the point g for a given position of the platform. Through this point g we draw the horizontal H H'. We then give to the platform any new position O A'; from the point A' as centre with a radius equal to A g we describe an arc intersecting H H' at a point g'; we join A' g'; and take on this right line a length A' C' equal to A C. The place of the points C' thus obtained is a curve of the 4th degree $m\,n$, which we might trace by the help of its equation, but which is more easily determined in the way just stated. This done, from each of the points C as a centre, with the radius desired to be given to the roller, we describe a circle; and then draw a curve M N tangent to all the circles thus described; this is the curve required. The curves M N are executed in iron, and form the lower border of a cavity contrived in the wall of each side of the passage, in which rest the extremities of the roller. From the manner in which these curves have been obtained, when the cylinder travels upon them, the extremities of its axis describe the curves $m\,n$, and the point g describes the horizontal H H'.

Another arrangement, contrived by Bélidor, has also been employed. The chain which suspends the platform passes over a pulley P. Fig. 2565, and is attached by its extremity to a roller C forming a counterpoise, and traversing upon a fixed curve M N. This curve is determined in the following manner. Let m be the initial position of the axis of the roller, corresponding to a horizontal position of the platform; from the point m a horizontal $m\,h$. The platform is next placed in some other position, and we measure the vertical distance G I travelled over by its centre of gravity. If P is the weight of the platform, P G I is the negative velocity of the weight upon the platform. Let p be the weight of the roller, and C K the distance from the point C to the horizontal $m\,h$; p C K will be the positive velocity of the weight upon the roller. Ignoring the frictions we should then have for the equilibrium P G I = p C K, whence we can obtain C K, and consequently the horizontal passing through the point C. On the other hand, the length of the chain being known, if we cut off from it A D, and trace the developing line described by the extremity C when the rest of the chain rolls over the pulley, starting from the point D, we shall have a curve which should contain the point C. This point will then be determined by the intersection of this curve with the horizontal drawn at the distance C K from $m\,h$. We can determine in a similar manner as many points as may be required of the curve $m\,n$ described by the centre of the roller.

The curve M N may be deduced from this by tracing the line enveloping circles described round different points of *m n* as centre with the radius of the roller.

See BRIDGE, p. 791. FORTIFICATION. VIRTUAL VELOCITY. WEIGHING MACHINES.

DRAWING FRAME. FR., *Étireur*; GER., *Zieh oder Streckmaschine*; ITAL., *Stiratoio*; SPAN., *Estirador*.

See COTTON MACHINERY.

DREDGING MACHINE. FR., *Cure-môle*; *Dragueur*; GER., *Baggermaschine*; ITAL., *Cavafango*; SPAN., *Draga*.

Dredging is effected in various ways; either by drags, or scoops, or rakes, or machines. There are two sorts of hand-drags, one for raising mud, the other sand; the first consists of an iron box pierced with holes, open in front as well as at the top; to this is attached a slightly flexible handle of a length proportionate to the depth it is to work in. When this is made use of, the men in a boat make the iron box enter the sand, sustaining the handle on the shoulder, and when it is filled they raise it, and if there be any large stones they are disengaged by means of hooks; a man will raise in this manner, where the depth is not more than 4 or 5 ft., a cubic yard in the course of a day, and sometimes more.

The *drag for mud* is differently formed: it is an iron drag, to which a canvas bag is attached by passing a cord through holes made in the ring purposely to receive it; that part of the iron rim which is intended to touch the ground and enter the mud must be sufficiently strong: two men in a boat or punt are required to manœuvre it, and in the course of a day they will raise 12 to 14 cub. yds., if the depth does not exceed 6 ft. When a boat is made use of, it is first moored in such a manner that it cannot drift; such a drag allows the water to flow out of it, and retains only the solid matter.

The Louchette, or kind of spade, or a collection of them, is used for cutting or extracting turf under water without the necessity of first pumping it dry this consists of a light iron frame, which is armed all round with a cutting blade, in length about 3 ft.: the part between it and the handle is open, being formed of four horizontal rods and two vertical ones; these receive the turf after it is cut and detached, and enable the workmen, by means of a rope and windlass, to pull it up. These cutting instruments have a variety of forms given to them to adapt them to the peculiar work they may have to perform.

The *box shovel* consists of an open box fixed at the end of a long handle, usually made of iron; the cutter traverses in a groove, and is worked by another handle; by this the turf is cut and detached, and each successive piece falls into the box; as many as four turfs may be drawn up at one time. Dredging machines have been constructed in various ways, and of iron or wood, according to the nature of the service. Some machines have been arranged so that the system of chain and buckets should work through a channel in the middle of the vessel; others with one system on each side, and others with the buckets working over the extremity of the vessel. But in general the modern practice is to place the machinery towards the extremity of the vessel, to allow of the working of the ladder (which holds the buckets) freely on either side of the vessel. By this arrangement barges can be laid along both sides of the vessel, and the material raised by the machine be taken away easily. Perhaps the most popular form of machine for dredging purposes is the spoon dredger; however, we shall confine ourselves to the chain-and-bucket dredging machines.

The best-adapted boilers and engines for dredging purposes are those upon the marine principle, as in them compactness and stability are combined, and for which reasons those of that description are generally applied; in practice it is found disadvantageous to the profitable working of the machine if the engine be not of a proportionate power to the depth of water, the buckets of a suitable number, and the bucket-frame of sufficient length to lie at a proper angle. Hence the following arranged proportions are annexed as the best adapted for working at or about the various specified depths from which the material is to be raised.

Nominal Horse-power of Engine.	Length of Bucket-frame in feet.	Number of Buckets.	Depth of Water in feet.
21	60	35	19
28	70	38	22
32	80	46	27

The boat or support requires little or no peculiarity of form otherwise than that of proper stability; it must be strong and well put together, or a constant tremulous motion is created by the action of the machinery, and the proper effect of the machine in a measure destroyed. The boat must also be of a magnitude sufficient for the receiving of the machinery, with a proper clearance for the buckets, according to the depth of water and different positions in which, on that account, they are so frequently required. In constructing the Thalie and Grison viaduct on the Paris and Lyons Railway, a bog or morass prevented the dredge-boats from entering; the engineers had the dredging apparatus removed from the boat and placed on a movable platform, shown in Figs. 2566 to 2568. The foundations having to be laid in an oozy or a miry soil, the part to be operated upon was enclosed on both sides by double rows of planks and piles, shown in Fig. 2568.

Fig. 2566 is a longitudinal section of this movable carriage-dredge when mounted and in working order; Fig. 2567 a plan; and Fig. 2568 a view of the end upon which the steam engine is placed. This dredging machine consists of a chain with buckets *a*, of which the axis of rotation C is mounted upon two parallel trestles *c*, fastened together upon two strong sleepers B, connected at each end by a series of transverse beams *d*, which constitute the rolling platform of the machine.

Upon two of these transverse beams *d* a small steam-engine of the locomotive class is firmly fixed, which moves the dredge. The platform B is moved upon four small wheels *e*, the axes of which are made fast to the transverse pieces *d*; the whole machine moves upon two strong bevelled sleepers *h*, placed across the principal platform, which moves upon six wheels *f*, secured by the beams *j*. So that the machine can be readily moved across the platform, and the platform and

2566.

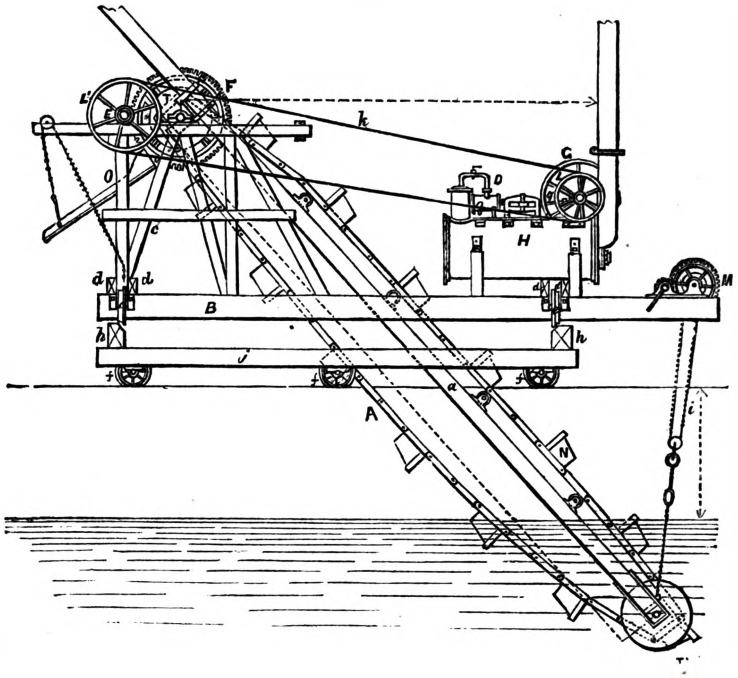

2567.

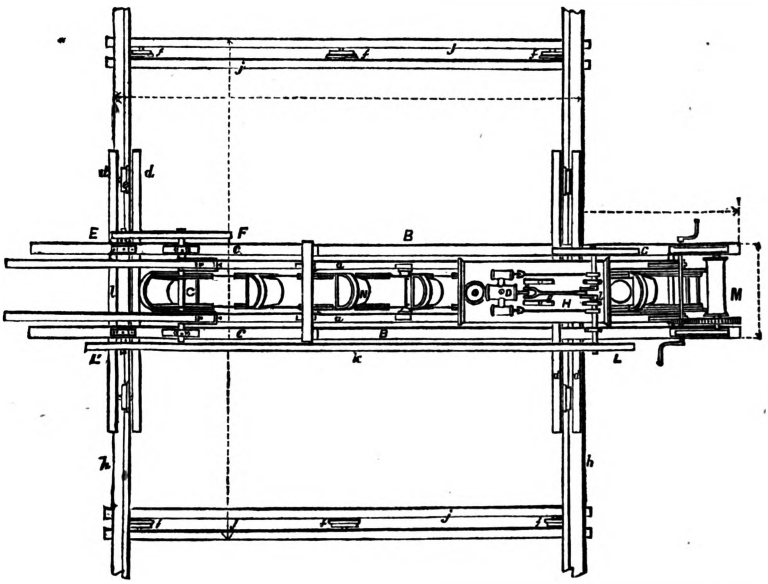

machine at any time can be rolled along two wooden rails *g*, made fast to the piles and running the whole length of the enclosure. The buckets N empty themselves upon a tray O, Fig. 2566, of which the inclination may be regulated at will; this tray deposits the material in a wheelbarrow or hand-cart. The chain of the buckets presents nothing peculiar; it is similar to that of an ordinary dredging machine. The inclination of the chain and bucket-frame is regulated by means of a winch *m*, fixed at the extremity of the frame B. This dredge is simple in construction and effective in operation; in the instance referred to it raised material from a depth of 26 ft. The

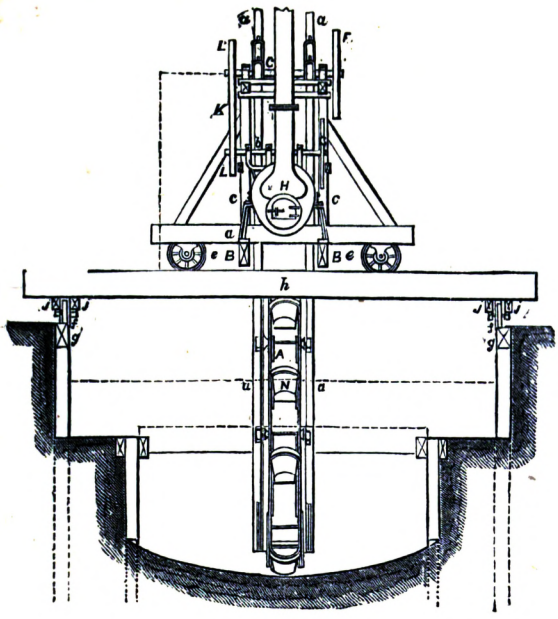

gear does not act directly, but by means of a belt K and pulley L, placed on the crank-shaft *b* of the fly-wheel *g*. On the other side there is a pulley L', fixed upon an intermediate axle *l*, which transmits motion to the axis C of the chain of buckets by means of the pinion E and wheel F. A steam-engine of 4 horse-power was employed, making fifty-five strokes a minute, giving to the shaft of the chain of buckets nine revolutions a minute, and delivering twelve buckets of earth in the tray O during the same time; each bucket contained about six gallons. Allowing for stoppages, this machine raised from 200 to 300 cub. ft. of earth in a day, working ten hours.

The Steam-Dredger, Figs. 2569 to 2571, built by Simons and Co., of Renfrew, for the Commissioners of the Government Works, at Carlingford Lough, Ireland. This dredger when completed steamed from the Clyde to Carlingford Lough, with her bucket-ladder in its working position. She behaved very well in a gale which she encountered when crossing the Channel, and she made on her trip an average of seven miles an hour.

The engravings, Figs. 2569 to 2571, exhibit the general arrangement of the vessel; her principal dimensions are as follows;—

	Feet.
Length	157
Beam	27
Depth of hold ..	9¾

The hull is strongly built of iron, and divided into four water-tight compartments, and the main framing for carrying the upper works is well braced, to stand the various strains to which the vessel is subjected. A pair of horizontal condensing marine-engines are arranged to work the dredging buckets or the twin propellers, as may be required.

The iron bucket-ladder is 90 ft. in length, and weighs 64 tons when the buckets

2570.

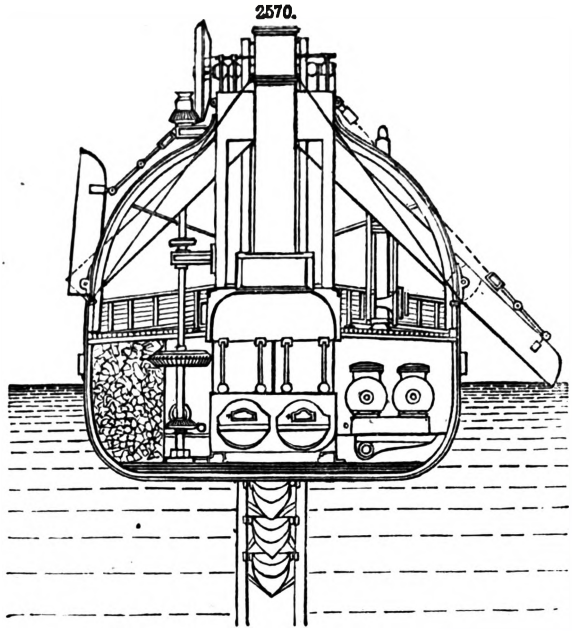

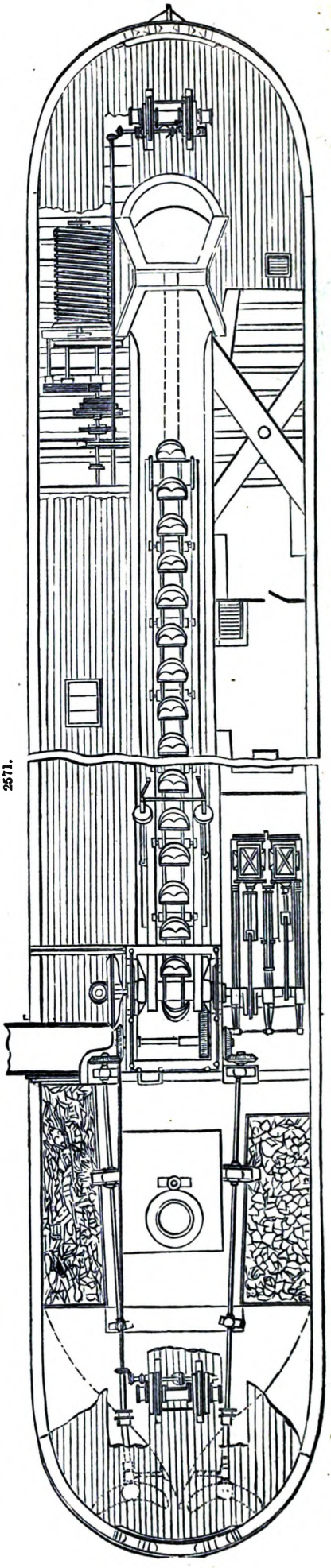

2571.

are at work. It is diagonally braced to stiffen it when at work in deep water and a rough sea. In ordinary working fourteen buckets are discharged a minute into the barges moored on either side of the dredger. The hoisting barrel, with its chain-blocks and connections for raising and lowering the ladder, weighs 15 tons, and the hand-levers are conveniently arranged for one man to work. The various motions for moving the vessel ahead, astern, and athwartship are provided with different speeds, and are driven by friction gearing.

The main gearing for working the buckets is also worked by a large bevel-wheel placed in the engine-room, and fitted with an adjustable friction centre, so as to prevent accidents in case of an excessive strain being thrown on the buckets. The upper tumbler is four-sided, and is provided with steel bars firmly fixed. The bucket backs are also of steel. The lower tumbler is five-sided, and has the end flanges formed so as to guide the buckets and prevent them from overriding when side dredging is being performed. The flanges also prevent the large boulders from getting on the tumbler bows. A four-sided lower tumbler fitted with side cutting knives and D-pieces to catch between the links has been tried, but this form of tumbler did not appear to work so well as the larger five-sided one, not clearing itself so well of the boulders.

A powerful bow *crab* winch is fixed on deck for keeping the vessel up to the cutting face, and a similar *crab* is fixed at the stern. The engine-room is supplied with the necessary indicators, gauges, counter, and telegraph from captain to engineer.

As the dredger has stormy weather to contend with, her machinery is designed so that a great portion of its weight is placed as low in the vessel as possible, so as to balance the upper parts and stiffen her. Independent donkey-engines drive the bow and stern crabs, and work bilge-pumps in connection with the various compartments of the vessel in case of a leakage. The cabin for crew is comfortably fitted with sleeping berths, lockers, and so on, for each man, a separate cabin being provided for the master and engineer.

The operation which the dredger has to carry out, namely, cutting Carlingford bar, is rather a formidable undertaking. The work has to be done in an exposed situation, the bar being in the open sea, in the British Channel, and the water is seldom smooth, whilst the tide runs with considerable force.

The bar consists principally of stiff blue clay, intermixed with a large proportion of boulder stones, many of them much larger than the buckets. These boulders are pushed forward by the lower tumbler, forming a mound in front of the cut, and occasionally some of these large stones are brought up between the buckets, resting on the links of the bucket-chain, when they are lifted out by the crane on deck. It is intended that the large boulders should be raised by divers, such stones being much too large for the buckets to lift, although each bucket has a capacity of 9 cub. ft.

One steam-hopper barge of 200 tons burthen, and two hopper barges without power, each of 120 tons burthen, attend the machine to remove the dredged material and drop it in deep water. The larger barge can be filled in less than an hour under ordinary circumstances.

2572.

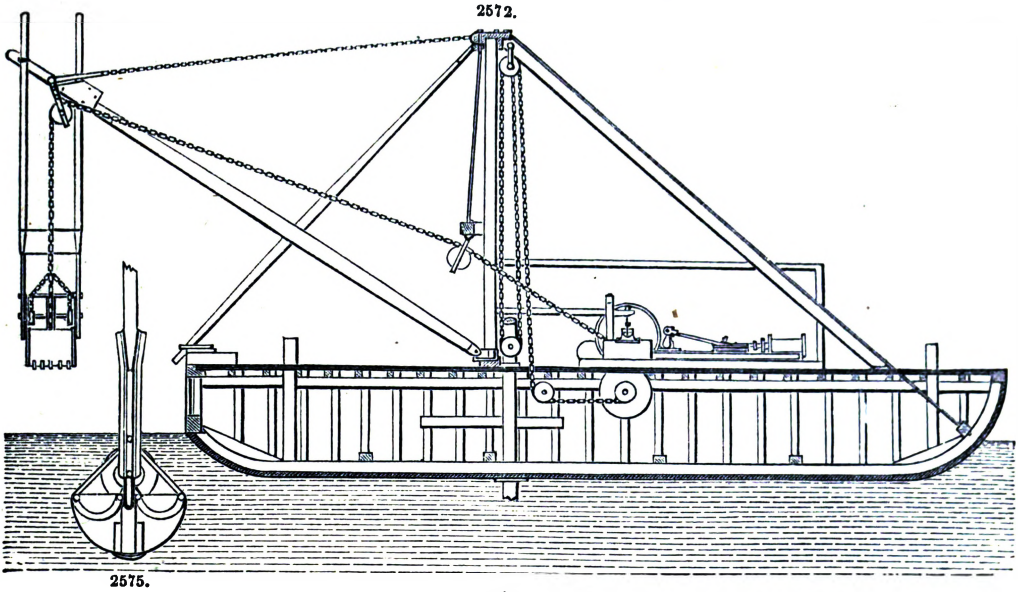

2575.

2573.

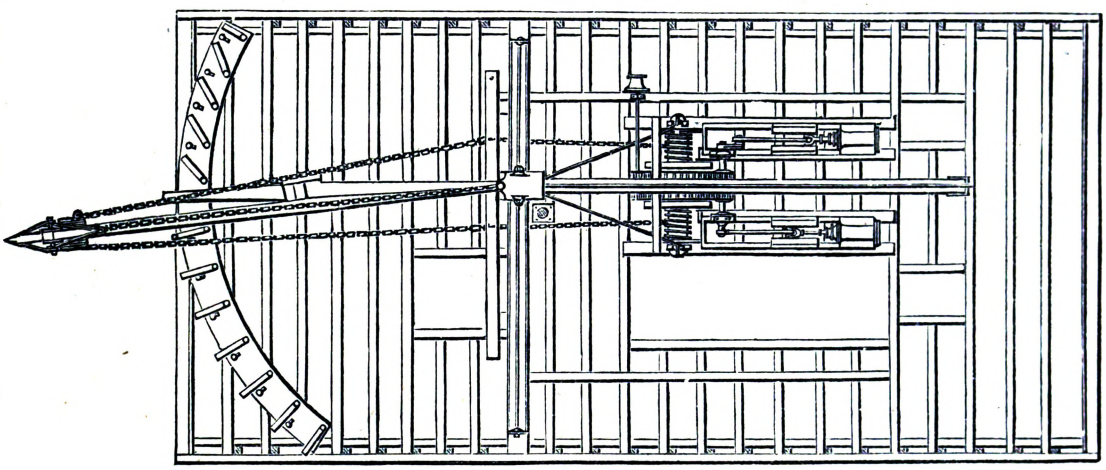

Owing to the unusually exposed position of the work, the moorings to hold the dredger when in action have to be very strong and heavy. They consist of powerful head and stern and four side anchors, all firmly secured. When the sea gets so rough as to drag the anchors and prevent dredging, the propellers are connected, the moorings let go (with buoys attached), and the dredger steams to a sheltered part of the lough until the weather moderates, and then the machine can again steam to the bar, pick up her moorings, and recommence operations.

The channel to be cut through the bar is about a mile in length by 600 ft. wide, and it is to be deepened from 8 ft. to 21 ft. at low water. Owing to the rise and fall of the tides, a part of the excavation will be done in 37 ft. water. The work has been carried on by James Barton, of Dundalk, and R. Hickson, the resident engineer.

2574.

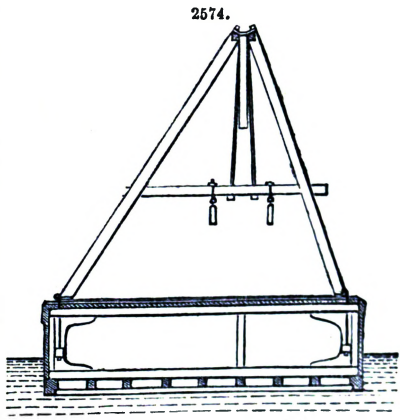

We illustrate, by Figs. 2572 to 2575, an arrangement of dredge, designed and constructed by Morris and Cummings, of New York, and which has been used with considerable success for dredging between the slips or jetties on the Hudson river. In this machine the dredging is not performed by a chain of buckets, but by a single bucket, of somewhat peculiar

construction. The bucket consists, as will be seen by the engravings, of two parts hinged together, and provided with an arrangement by which they can be opened or closed. The two parts of the bucket are hinged at their upper inner corners, and from their outer sides tie-rods, or links, extend to a cross-bar, the ends of which work in guides, as shown. When this cross-bar is raised in the guides, the two parts of the bucket are caused to open from each other, whilst, when it is caused to descend, the two halves are forced together, and caused to securely hold any materials contained within them. The raising or lowering of the cross-bar in its guides is effected by two chains, both of which pass up over the pulleys at the end of the crane-jib and down to the hoisting machinery, each chain being led to an independent barrel. One of these chains is attached directly to the cross-bar above mentioned, whilst the other before being connected to that bar is led round a pulley placed beneath it.

Whilst the bucket is being lowered, it is suspended by the first-mentioned chain, and the cross-bar is raised in its guides, and the two parts of the bucket kept apart. As soon as it reaches the bottom the strain is brought upon the other chain, and the cross-bar is thus hauled down in its guides, and the parts of the bucket closed before the latter is raised towards the surface. The hoisting machinery consists of a pair of horizontal engines, which by means of a friction clutch can be made to drive either chain-drum at pleasure. The bucket is guided during its descent by a pair of wooden poles attached to the guides of the cross-bar, these poles working through eyes fixed near the top of the crane-jib, as shown in the figures. After the bucket has been raised the jib is swung on one side, so that the contents of the bucket may be discharged into lighters or any other receptacle for the dredged material. The swing of the jib is regulated by a bar, which catches on one or the other of a set of stops arranged at the head of the dredger, as shown in Fig. 2573.

The engravings, Figs. 2576 to 2581, illustrate a system of transporting earth from dredgers by the employment of a stream of water, produced by means of a centrifugal pump, which has been in successful action for upwards of twelve months at the works of the Grand Canal at Amsterdam, in conjunction with ordinary dredgers. The inventor of this machine we do not know. It is carefully kept out of view, as in similar numerous cases, who invented this machine; this trick is common in many places, where the unfair sentence, "It is he who carries out an invention who deserves praise, not the original inventor," passes current.

Figs. 2576 to 2579 represent different views of one arrangement of the pumping machinery and pipes, whilst Figs. 2580, 2581, show the apparatus as actually applied to the dredgers above mentioned. Fig. 2576 is a vertical section, and Fig. 2577 a plan of the machinery, $a\,a$ being a cylinder fixed to the side of the dredger so as to receive the earth or material it is desired to convey, and b being the pump-case fixed at its lower end. This pump-case should be just below the level of the water from which the pump takes its supply through the water-supply passage c, which is adapted to an opening in the bottom of the pump-case, and is fitted with a valve d. This valve can be opened and closed by the lever d^1, and handle d^2; c is a bridge-piece fixed to the pump-casing and passing through the passage c, to carry the step or lower bearing of the pump-axis f, which has also an upper bearing at the top of the cylinder a; and $g\,g$ are bevelled wheels by means of which the axis f is driven. The pump-blades f^1 are fixed on the axis f; and a^1 is an opening in the cylinder a, by which the earth or material is supplied to it by the dredger. This opening should be 6 ft. or more above the bottom of the cylinder. A conical valve or cover h is provided to regulate the passage of the earth or material from the cylinder through the opening in the top of the pump-case; and this valve has two rods $h^1\,h^1$ fixed to it, and which pass through guides $i\,i$ to a forked lever k to which they are jointed. The lever k extends out through the side of the cylinder, and is jointed to a rod l, which at its lower end is forked and holds a screw-nut m. This nut works on a screw, the stem of which is carried in a bearing, and has the bevelled pinion n upon it gearing with another similar pinion on the axis of the hand-wheel n^1, so that by turning this wheel the valve h can be raised and lowered; the valve is guided by the fixed guide-rods h^2. There is a tangental opening in the pump-case b, which receives a casting o, to which the pipes for conveying away the water and material are connected.

A plan of the arrangement of pipes is shown on a smaller scale by Fig. 2578. In this figure p is a wooden pipe made with staves like a cask, and bound together by hoops; it is connected with the casting o by a leather connecting tube q, which is clipped on to the casting and on to the pipe by metal hoops drawn together by screws. At the other end of the pipe p, another leather tube r of some length is placed, this tube forming a flexible joint, connecting it with the wooden pipe s. The tube r is kept in form by a coil of thin flat iron riveted to the leather. By similar flexible joint tubes the pipe s is connected with the succeeding pipes of the series, t, u, and $v\,v\,v$, which series is continued to the shore where the material is to be deposited. Each of the pipes of this series is formed with floating pieces at its sides, as shown in section, Fig. 2579, to sustain it in the water. The three tubes, s, t, and u, are combined together to make them more readily manageable in such a manner that although the ends of the coupled pipe can be moved to and from each other, movement is restrained by booms $w\,w^1\,w^2$. The centre and larger boom w^1 is pin-jointed at the centre to a float or saddle-piece at the centre of the pipe t, and the outer ends of this boom are pin-jointed to the booms w and w^2, the centre pins of the joints being fixed upon the floats $x\,x$. The other ends of the booms w and w^2 are jointed at the junction of the pipes $p\,s$ and $u\,v$ respectively. It will be seen that at each of these junctions, and wherever the flexible leather joint tubes are left free to bend, the strain is taken off the flexible tubes by means of planks $y\,y$ fixed on each pipe-float over the pipe, and pin-jointed together at their ends. When the position of the apparatus is such that the material does not require to be conveyed over water, there may be substituted for this flexible system of floating pipes any ordinary arrangement of tubing.

Figs. 2580, 2581, represent the apparatus as used in Holland. In this case it will be seen that a pump is bolted to the side of the dredger, and driven at the rate of 230 revolutions a minute by the same engine, by means of the bevel-gearing shown on the top. The pump, which is 3 ft. 6 in. in diameter, is fixed with the top on a level with the surface of the water, and is furnished with

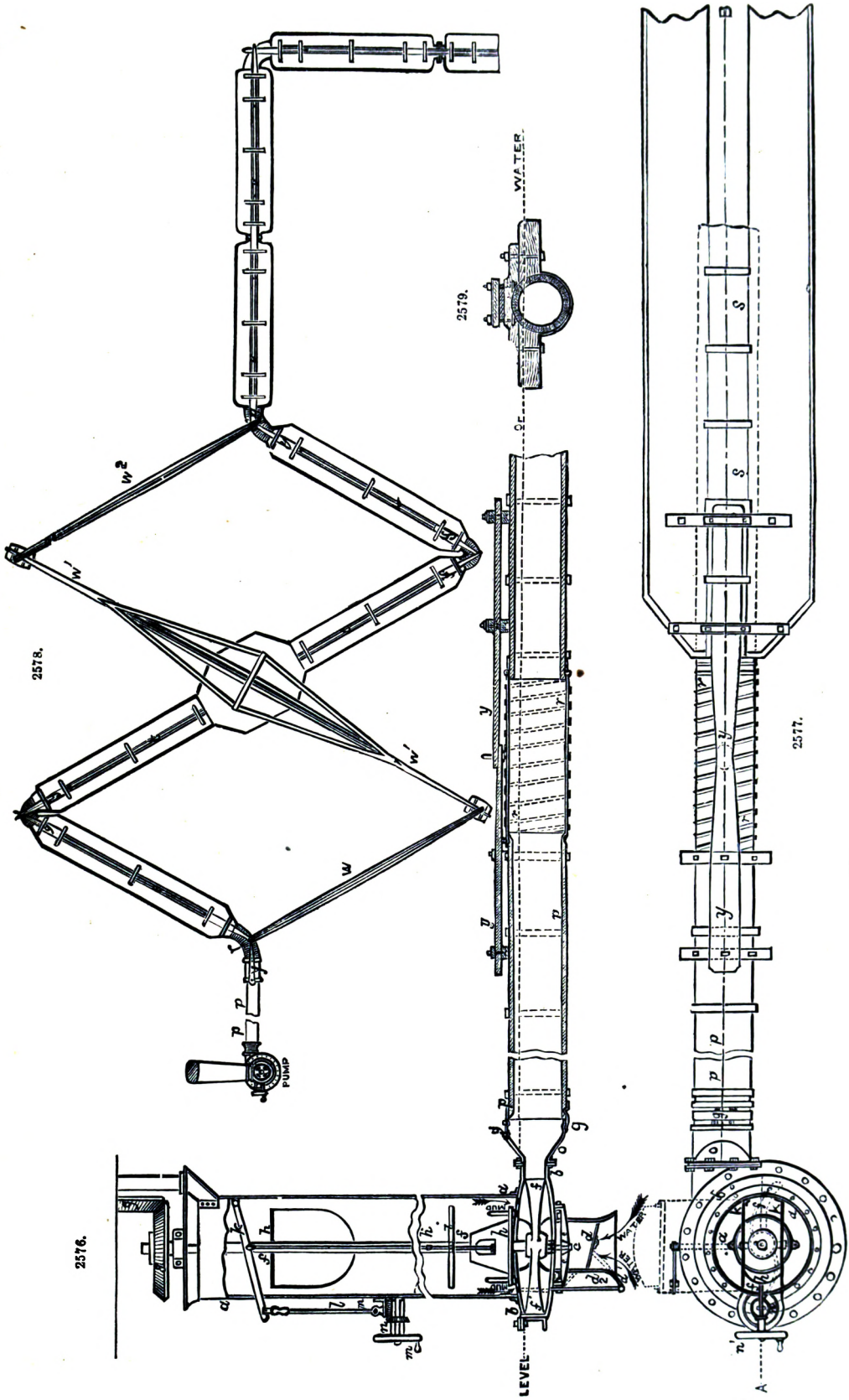
2576.
2577.
2578.
2579.
WATER
LEVEL
PUMP
A
B

2580.

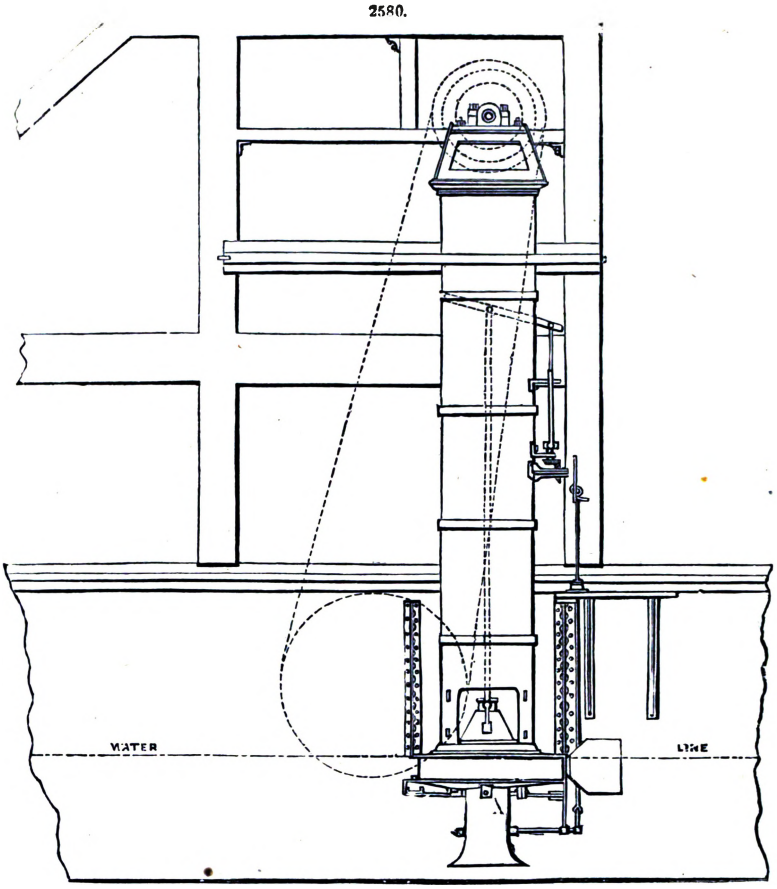
WATER
LINE

2581.

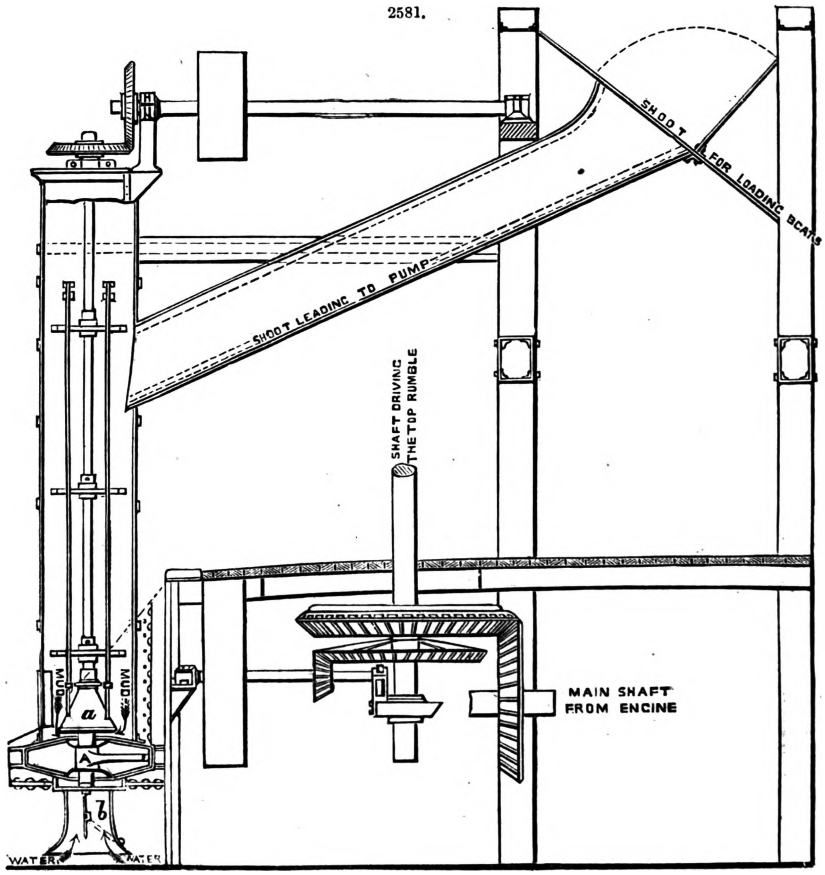
SHOOT
FOR LOADING BOATS
SHOOT LEADING TO PUMP
SHAFT DRIVING THE TOP RUMBLE
MAIN SHAFT FROM ENGINE
MUD
MUD
a
WATER
WATER

two inlets protected by valves, the one on the bottom for the admission of water, and the other on the top for regulating the entry of the material to be transported. On the top of the pump is placed a cylinder or reservoir, to receive, by means of a shoot, the stuff dredged up.

The dredger is connected with the shore by means of wooden pipes, fitted with buoying pieces to enable them to float, and connected by leather joints, those immediately following the dredger being arranged on the lazy-tongs principle, to admit of its free movement in any direction. The leathern joint pipes for this portion are about 4 ft. 8 in. long, strengthened and compelled to assume a regular curve by iron spirals riveted to their outsides; but the joints for the intermediate pipes are only about 18 in. long, just enough to allow of a firm connection being made by iron hoops tightened by screws. The diameter of the pipes is 15 in.

The action is as follows;—By the revolution of the flyer A a rapid stream of water is maintained through the pipes, into which the dredged stuff is admitted through the pump by the opening on the top, and is thus rapidly mixed and carried to the delivery at the opposite end of the pipes, where the heavier materials deposit themselves in nearly level beds. An arrangement might also be made by causing the pipes to discharge into an enclosed area and running the water from the top, by which means any required thickness could be deposited.

2582.

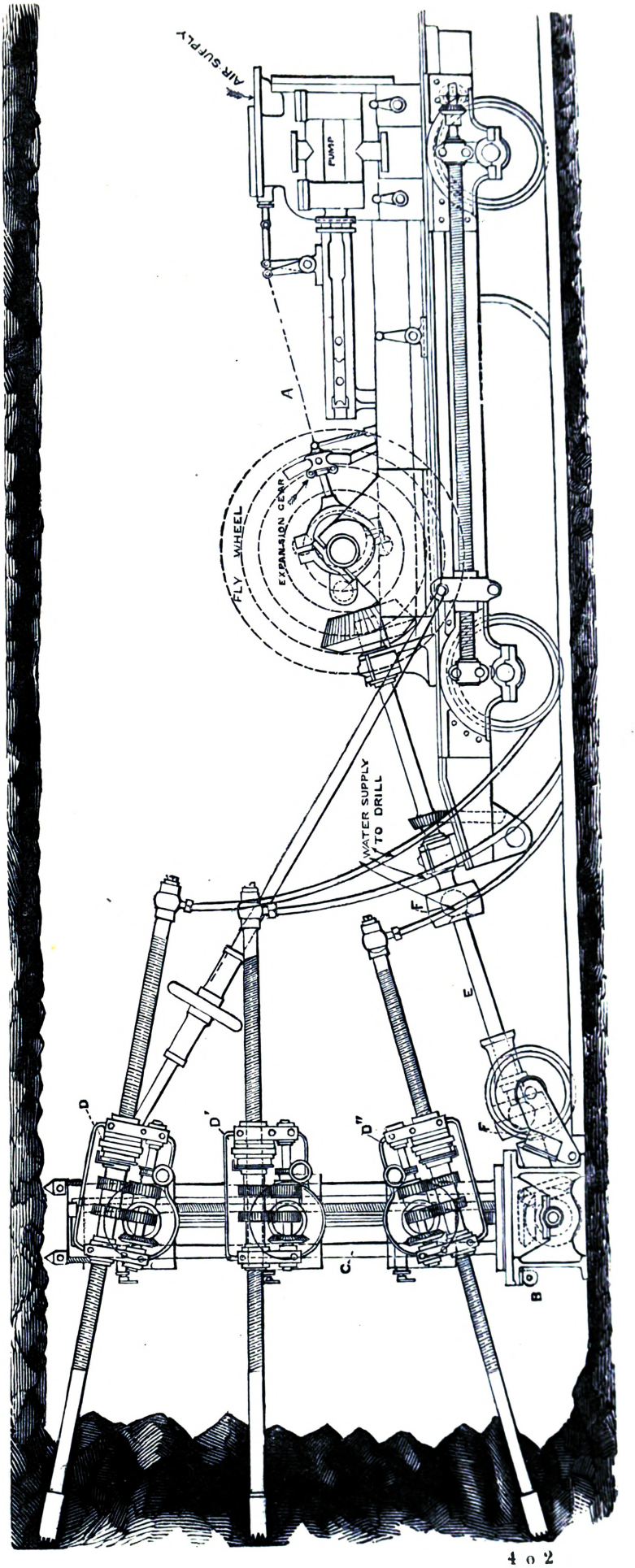

DRILL. Fr., *Foret;* Ger., *Bohrer;* Ital., *Trapano;* Span., *Taladro.*

A *drill* is, strictly speaking, a boring tool that cuts with its bevelled end by revolving.

See Auger. Boring and Blasting. Hand-Tools. Machine Tools.

The Diamond Rock-Boring Machine.—This machine, Figs. 2582, 2583, consists of the following parts, namely;—

The driving engine or motor, A; the horizontal girder or transom, B; the two vertical standards, C, C; and the six drills, D, D, D, D, D, D, three on each standard.

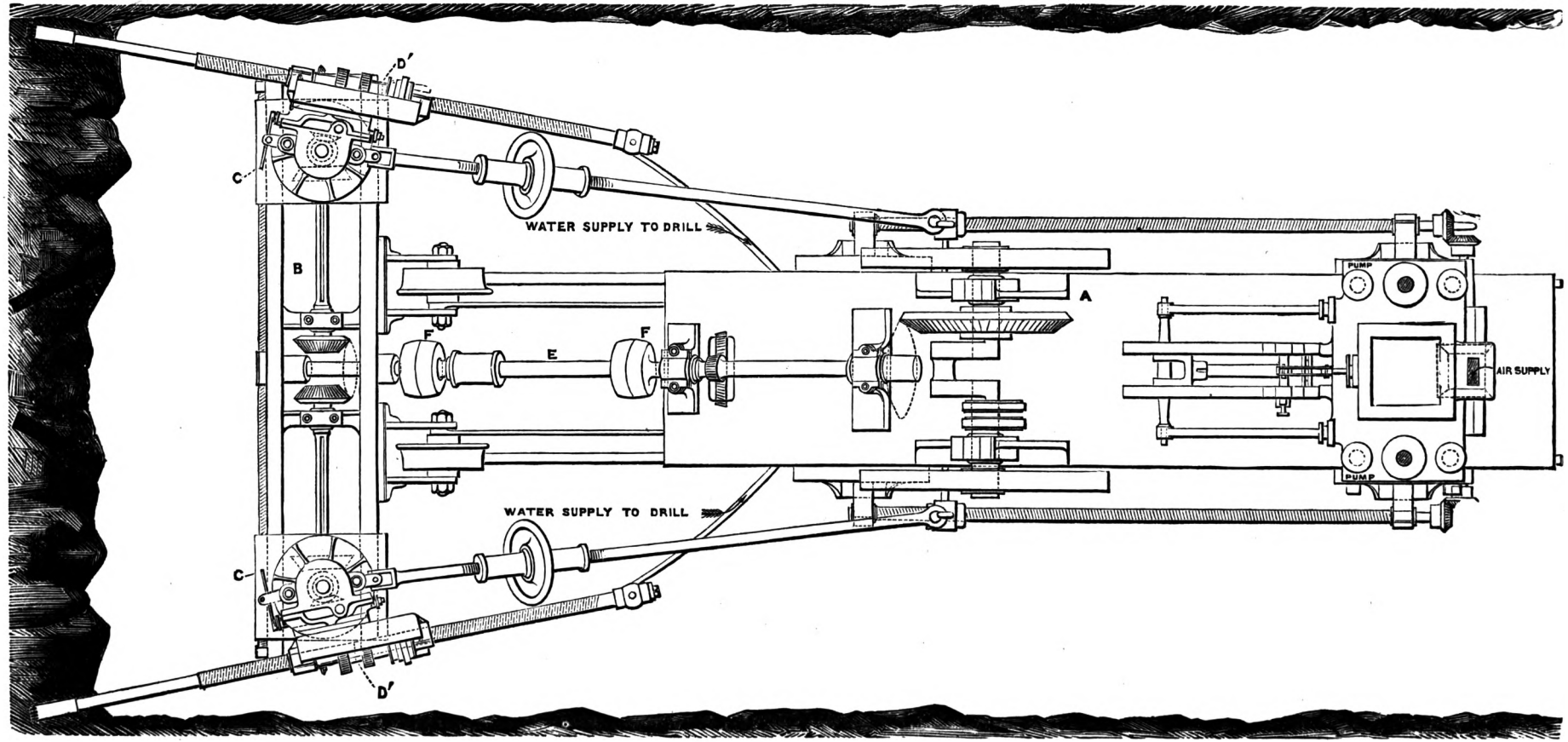
D'
C
WATER SUPPLY TO DRILL
B
A
PUMP
F
E
F
AIR SUPPLY
PUMP
WATER SUPPLY TO DRILL
C
D'

The machine of which we speak was constructed by Appleby, Bros.

The motor is an engine of the ordinary description, which is worked by compressed air supplied through tubing; but, direct-acting water-pressure engines might equally well be used if found convenient.

The power is transmitted from the motor to the horizontal shaft by the oblique shaft E, which is driven by bevel-gearing from the crank-shaft of motor at one end, and drives the transom-shaft at the other end. This oblique shaft is provided with universal couplings F, F, which allow for any inequalities in the bottom of the tunnel or heading. The horizontal transom-shaft drives two vertical shafts, one in each standard, by bevel-gearing, and these vertical shafts in their turn drive the drills or borers through short horizontal shafts in the movable saddles to which the drills are fixed.

The drill consists of a strong cast-iron frame provided with suitable bearings, and in these bearings revolve the driving spindle on one centre, and the drill-bar on the other. On the driving spindle of drill are two small spur-wheels which are thrown in and out of gear by clutches; these spur-wheels gear into two corresponding wheels on the drill-bar, one of which drives the bar and the other the *nut* which gives, by means of a differential speed, the necessary feed or forward motion to the bar. This feed is set to advance at a certain fixed rate for a given pressure on the drill, when, owing to any irregularity in the hardness of the rock this pressure is augmented, the feed is automatically, either partially or entirely, thrown out of gear, the full speed being resumed as soon as softer rock is touched. The pressure can be regulated from 1 lb. up to 1000 lbs., which is the pressure required for cutting pure quartz. Each drill can be thrown out of gear independently of the other ones.

The crown which actually cuts the rock, consists of a hollow cylinder of steel, in the front end of which the carbonates, *erroneously called black diamonds*, are set in such a manner that they project both on the inside and outside of the crown, so that as it cuts its way into the rock it leaves good clearance for the drill-bar, which is also made hollow and of such a diameter internally that the core or solid cylinder of rock which is left by the crown can pass freely along the entire length of the bar.

A supply of water under slight pressure is kept constantly flowing along the inside of the drill-bar, and thence to the carbonates, where it serves the double purpose of keeping them cool and washing away the fine particles of rock produced by the cut.

Eight carbonates are set in each crown, four on the inside and four on the outside, and the wear of these carbonates is found in practice to be insignificant compared with the amount of work they do. At Croesor in Wales, where the machine is at work, crowns have cut upwards of a ¼ mile of hole, in hard bustard slate, and after this the stones have retained much of their original value.

The machine illustrated by Figs. 2582, 2583, is designed to bore holes 1¾ in. diameter × 3 ft. long.

The method of working is as follows;—The machine having been brought into position near face of rock, and there firmly fixed by means of jack-screws at top of standards, the miners proceed to drill the holes in the rock, as shown in Fig. 2582, after which the machine is run back as far as necessary on the tramway, and the holes are charged with gun-cotton or other explosive material and then fired. The centre part of the rock in the shape of a V is first brought away, and then the two sides by means of holes drilled straight in and near the extreme sides of tunnel. The holes bored are found to be perfectly cylindrical for their entire length, which is a very great advantage for blasting, as the cartridge containing the explosive material can be made the exact size of the hole, and the maximum result is thus obtained from the force of the explosion.

DRUM. Fr., *Tambour;* Ger., *Trommel;* Ital., *Tamburo;* Span., *Tambor.*

A *drum* is a short cylinder revolving on an axis, generally for the purpose of turning several small wheels, by means of straps passing around its periphery; called also *pulley*, and *rigger*, when very short in the direction of the axis, so as to have the form of a disc.

DRY-ROT. Fr., *Pourriture sèche;* Ger., *Stockung; Trockenfäule;* Ital., *Tarlo secco;* Span., *Carcoma.*

See Kyanizing.

DUCT-WHEELS. Fr., *Roues à couloirs;* Ger., *Filtrirräder.*

See Turbine Water-wheels.

DUSTER. Fr., *Machine à nettoyer les chiffons;* Ger., *Lumpenreinigungs Maschine;* Ital., *Macchina da batter stracci;* Span., *Máquina para limpiar trapo.*

See Paper Machinery.

DYKE. Fr., *Digue;* Ger., *Damm; Deich;* Ital., *Diga, Argine;* Span., *Malecon.*

A mound thrown up to prevent low lands from being inundated by the sea or a river is called a *dike*, or *dyke*. See Damming.

DYNAMITE. Fr., *Dynamite;* Ger., *Dynamite;* Ital., *Dinamite;* Span., *Dinamita.*

See Boring and Blasting, p. 582.

DYNAMOMETER. Fr., *Dynamomètre;* Ger., *Kraftmesser;* Ital., *Dinamometro;* Span., *Dinamómetro.*

The dynamometer, from the Greek "*dynamis*," force, and "*metron*," measure, is an instrument for measuring forces, and, by extension, the work which they produce.

There are various kinds of dynamometers, but all rest upon the same principle. The chief part consist of a spring, the flexion of which may be measured; every force which, when applied to the instrument, produces the same flexion as a weight of n kilogrammes is said to be a force of n kilogrammes. Upon this principle the instrument is graduated.

The simplest form of the dynamometer is the common weighing instrument represented in Fig. 2584. It consists of a spring A O B with two arms. At one end of the arm B O a metal circular arc is fixed, passing through the arm O A, and provided at its extremity with the ring E, to which a weight may be suspended, or any other force; a muscular effort, for instance, may be applied. At the end of the arm O A a second circular arc is fixed, capable of sliding over the first

and passing through the arm O B; this arc terminates at D in a ring which serves to hold the instrument by or to suspend it to a fixed point. This second arc is also graduated from the extremity D down to the point t where there is a kind of notch or projection, the use of which is to prevent a fracture of the spring when too great a force is applied. Suppose now the instrument suspended by the ring D to a fixed point, and a weight of 1 kilogramme attached to the ring E; the two arms of the spring will approach each other, the arc D t will pass beyond the arm O B by a certain quantity, and on this arc the point may be marked at which the arm O B stops. This operation continued with weights of 2, 3, and so on, kilogrammes, will finally complete the graduation of the instrument. To obtain fractions of a kilogramme, divide each interval into ten equal parts; this will give an approximation sufficiently near for ordinary purposes.

If, again, having removed the weight, we apply a force at E and the arm O B stops at the same point in the arc D t as when a weight of n kilogrammes was suspended from the ring E, we conclude that the force in question is equivalent to n kilogrammes. Thus, to measure a force in kilogrammes, we have only to apply it at E, and the number marked by the descending arm of the spring will be the value of the force.

2584.

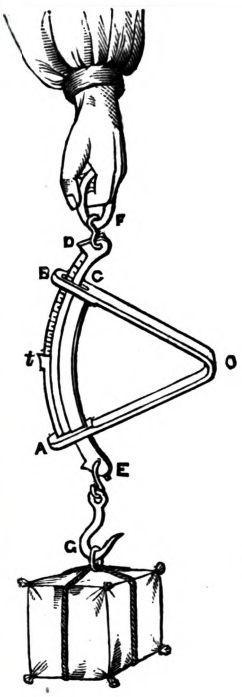

2585.

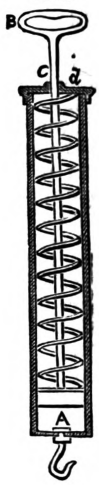

There are other kinds of weighing instruments in which the spring is spiral, as in Fig. 2585. This spring is contained in a cylindrical metal box, to the upper part of which it is fixed in the point d; its lower end being connected with a disc A to which is attached a rod that passes through the spring along its axis and out through an orifice in the top of the box. The end of this rod is provided with a ring B by which it may be held or suspended on a fixed point. In this case the weight, or force of any kind, is applied to a hook fixed to the bottom of the box. Under the action of this force, the spiral spring is compressed in a vertical direction and the rod issues from the box. The quantity of the rod outside the box is the measure of the force. The mode of graduating this instrument is the same as in the former case.

2586.

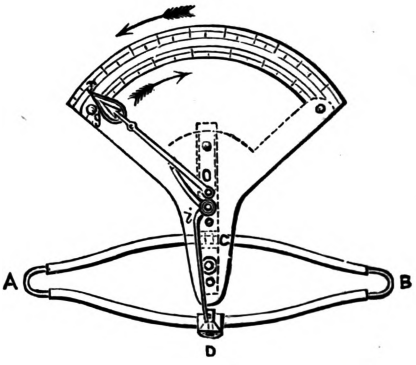

The instruments we have described are sufficiently exact for the purpose of trade to which they are applied. But to measure accurately forces greater than 100 kilogrammes, a more precise apparatus is used. This apparatus, which is known as *Reynier's dynamometer*, consists essentially of a spring A B, Fig. 2586, of two arms or branches joined at the ends. The middle C of one of the arms is fixed, and the force to be measured is applied to the middle D of the other arm, in the plane of the spring, and according to the line which would join the points C and D. The quantity by which the two arms recede from each other is indicated by the index O x, the point of which moves in a circular arc. The graduation of this arc is effected by placing the instrument in a vertical position, and then applying weights to the point D. It will be seen that the instrument has two graduated scales; one refers to the case we have supposed when the point C is fixed by means of a hand-screw placed in this point and the force is applied to the point D; the other refers to the case when the point A is fixed and the force applied to the point B. In this latter case the force is measured by the receding o. the points A and B, which implies the approach of the points C and D; and this approach is marked by a second point y of the index, which moves in a second circular arc concentric with the first. When the points C and D approach each other, a rod fixed to the point D turns a crooked lever to which it is jointed in i; and the long arm of this lever moves the index in the direction of the lower arrow; but when the points C and D recede from each other, the lever turns in the opposite direction, and the index resting by its weight against the lever, moves in the direction of the upper arrow. The second mode of employing the instrument, by fixing the point A and applying the force at B, serves to measure considerable forces, the muscular force of a horse, for example.

Poncelet is the inventor of a much more simple dynamometer, which was made use of by Morin in his researches in connection with the subject of Friction. It consists, as shown in Fig. 2587, of two equal and parallel strips of steel A B, A′ B′, jointed at their extremities. The middle I of one of these is fixed and the force applied to a hook C placed for this purpose on the other. The force is measured by the quantity by which the middles recede from each other, this quantity being indicated by the strips themselves on a divided rule fixed upon one of them. The advantage of

this arrangement consists in the fact that, if the force does not exceed a certain limit, the variation of the distance between the two middles, that is, the excess of the distance observed over the primitive distance corresponding to the natural state, is proportional to the force that causes it; so that knowing this excess for a determinate force, by measuring the distance corresponding to a given force we may deduce the measure of it by a simple proportion. If the forces to be measured are great, the parabolic form may be given to the springs, as shown in Fig. 2588. The flexions obtained are, in this case, the double of those which would be obtained with springs offering the same resistance, but having a uniform thickness, a fact which increases the precision of the instrument. It was found from experiments made by Morin that the flexions remain proportional to the forces exerted so long as these flexions do not exceed $\frac{1}{10}$ of the length of the springs, reckoned from the joints.

2587.

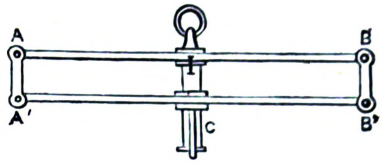

2588.

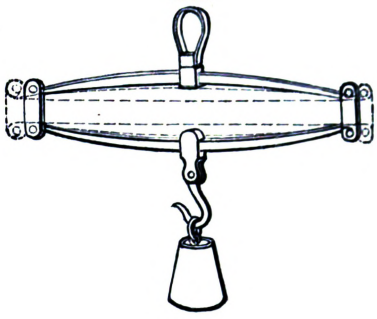

Dynamometers are employed also to measure the work done by these forces; they are then called style or tell-tale dynamometers, according to the principle of their construction, and they are arranged in two different ways, according as the motion to which they are applied is one of translation or of rotation, such, for example, as the motion of a carriage or of the driving axle of an engine. We will first consider a motion of translation, in which case the instrument is called a *traction dynamometer*.

Two equal springs A A′, B B′, Fig. 2589, of about $0^{m}{\cdot}68$ in length, level on their inner surface, and parabolic on their outer surface, are jointed together at their ends and held in the middle by two catches. The catch of the spring A A′ is fixed to the vehicle on which the experiment is to be made, and the other on B B′ is provided with a ring $a\,a'$ to which the motive power is applied. The part in the figure marked $b\,b'$ is intended to prevent injury to the springs from overstraining; it is connected with a similar piece on the other side of the springs by the bolts $e\,e'$, against which the front spring strikes.

2589.

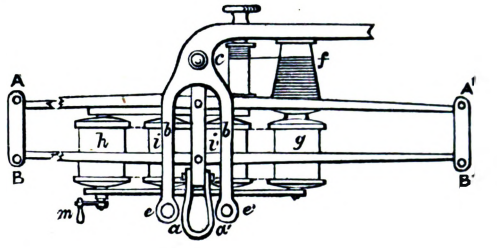

To the front catch is fixed a pencil, and below the pencil a roll of paper is arranged which moves with a motion proportional to that of the vehicle, but in a perpendicular direction. To obtain this motion, an endless band is passed over the nave of one of the front wheels, and the band made to turn a small pulley-wheel, to the axle of which an endless screw is attached; by this means the little cylinder c is made to revolve. A cord passing round this cylinder transmits the motion to a conical drum f, upon the axle of which the cylinder g is fixed; this cylinder receives the paper, which is first rolled round the cylinder h. The paper is held in contact with the pencil by the two intermediate cylinders i and i'. A crank handle m serves to roll the paper upon the cylinder h. The use of the conical drum f will be obvious. If the motion of the vehicle were transmitted directly from the little cylinder c to the receiving cylinder g, as the paper which is rolled on it gradually increases its diameter, the motion of the vehicle remaining uniform, that of the paper would be accelerated. This inconvenience is avoided by interposing the drum f, whose diameters are so calculated that its rotary motion is retarded as the paper is rolled upon g, and consequently the motion of the paper remains uniform.

A second pencil, fixed to one of the guard-pieces $b\,b'$, traces upon the paper a straight line, which serves as a term of comparison in computing the distance of the springs apart, marked by the curve which the pencil affixed to the front catch traces. The fixed pencil is arranged so that the straight line traced by it may correspond with the natural state of the springs, that is, to no effort on the part of the motor. It follows from this that the ordinates of the curve, reckoned from this straight line, are proportional to the forces exerted; besides this, the abscissæ parallel to this straight line, or the tracks described by the paper, are proportional to the roads passed over by the vehicle; consequently, the work effected by the motor is proportional to the area of the curve traced by the moving pencil, and comprised between this curve and the right line traced by the fixed pencil.

This area may be computed by the ordinary methods of quadrature, or by means of a *planimeter*. But Morin has pointed out a much simpler method. The paper used for this purpose is machine made, and of great homogeneity; we may, therefore, admit that its weight is proportional to its superficial extent. Hence, if we cut the paper along the curve and the straight line, and weigh the band thus obtained, knowing the weight of a superficies of the same paper, the whole rectangular band, for instance, whose dimensions are known, we may deduce the area by a simple proportion.

We know to what force a given distance between the springs, or any ordinate of the curve, corresponds. We know also, from the transmission of the motion, the distance or track described by

the paper which the vehicle is advancing by a given quantity, 1 mètre, for example; we, therefore, easily deduce from the area found the number of kilogrammètres representing the work effected. Let λ be the distance between the springs, produced by a force of 1 kilogramme, and y the distance produced by a force F; we shall have $F : 1^k = y : \lambda$, whence $F = \frac{y}{\lambda}$, in kilogrammes.

Let ϵ be the track described by the band of paper for 1 mètre of distance traversed by the vehicle, and x the track described by the paper for a distance of e mètres; we shall have

$$x : \epsilon = e : 1^m, \quad \text{whence } e = \frac{x}{\epsilon}, \quad \text{and } de = \frac{dx}{\epsilon}.$$

Now the work T, effected by the force F, is expressed by

$$T = \int F\,de, \quad \text{or } T = \int \frac{y}{\lambda} \cdot \frac{dx}{\epsilon} = \frac{1}{\lambda\epsilon} \int y\,dx;$$

but the area of A of the curve traced by the moving pencil is expressed by $A = \int y\,dx$ between the same limits. We get, therefore, $T = \frac{A}{\lambda\epsilon}$, and this value will be expressed in kilogrammètres. Suppose, for example, that the area found is 0·75 square mètres. Let $\lambda = 0{\cdot}000125$, and $\epsilon = 0^m{\cdot}018$; we conclude $T = \frac{0{\cdot}75}{0{\cdot}000125 \times 0{\cdot}018} = 333333$ kilogrammètres.

With bands of paper 16 or 18 mètres in length, the experiment may be continued over a distance of more than a kilomètre.

When it is required to continue the experiment over a greater length of road, this kind of dynamometer is not sufficient, and the tell-tale dynamometer is substituted for it. On the hinder catch is fixed a vertical rotating axis having on its lower end a pulley-wheel which receives the motion of one of the front wheels by means of an endless cord. On the same axis is fixed a horizontal solid wheel which revolves with the pulley-wheel. To the front catch is affixed a horizontal rotating axis, bearing at its extremity a small wheel, the circumference of which is in contact with the horizontal solid wheel, and which, consequently, receives the motion of the latter—a motion which becomes more rapid as the small wheel recedes from the centre of the other, and which, therefore, is proportional to the force that separates the springs, since the small wheel coincides with the centre when at rest. The number of revolutions made by the small wheel in a given short time is, therefore, proportional, on the one hand, to the rotary speed of the solid wheel, and consequently to the elementary track or distance described by the vehicle, and, on the other hand, to the force exerted upon the dynamometer. It is thus proportional to the product of these two magnitudes, that is, to the elementary work effected by the force. The total number of revolutions made by the small wheel during the experiment represents, therefore, the sum of the elementary work of the force, that is, the total work of this force. To facilitate the counting of the number of revolutions, an endless screw is arranged on the axle of the small wheel, which screw transmits its motion to indices moving on divided limbs, and marking upon one the revolutions and tens of revolutions, and on the other the hundreds and thousands.

In making experiments in towing vessels, when the band of paper cannot be put in motion by the vehicle itself, an arrangement of clockwork is employed, which gives it a sensibly uniform motion.

The curve traced by the pencil does not in this case give the work of the force, but its *impulse*, or $\int F\,dt$; and, by dividing it by the total duration of the experiment, we obtain the mean value of the force exerted.

If it be required, in this case, to compute the work, it may be accomplished by placing marks along the shore, and making a stroke on the paper every time the vessel passes one of these marks. The strokes thus made divide the curve into portions, the mean value of the force of each of which may be computed. Multiplying this by the distance between the two corresponding marks, we obtain an approximative value of the work which applies to the interval between these marks. The same process is continued for the other intervals, and the sum of the work so found is the total amount of work; but this method gives only a rough approximation.

2590.

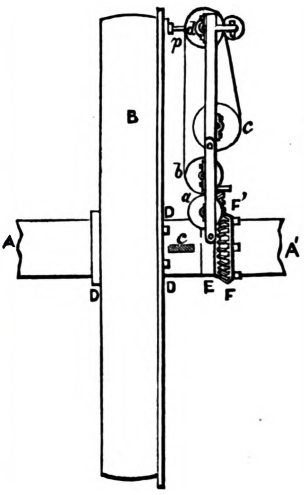

Let us now suppose the case of determining the value of work in a rotary motion, in which case the dynamometer is called a rotation dynamometer. The motion is transmitted by means of a belt to an auxiliary axle A A′, upon which is fixed by slight friction a wheel B of about $0^m{\cdot}89$ in diameter, Fig. 2590, intended to transmit, by means of a second belt, the motion of the auxiliary axle to the other parts of the machine, and to overcome the resistances to which it is subject. The axle A A′ cannot carry round the wheel B, because it is not solid with it; but a spring, the end c of which is shown in the figure, is fixed into this axle in the direction of a radius; and in the motion of A A′ its end comes in contact with a piece D D′, fixed to the wheel, and carries the latter round after having undergone a flexion proportional to the force to be transmitted.

Upon the axle A A′ is fixed a framework, one side, E E′, of which is shown in the figure; this framework, which moves with the axle, carries a system of cylinders analogous to that we described when speaking of the translation dynamometer, and which puts in motion a strip of paper pressed

upon by a pencil *p* fixed to the wheel. The paper receives a motion proportional to that of the axle in the following manner. This axle is embraced by a collar F F′, which may be made, fixed in space; this collar forms a conical wheel which gears into a conical pinion partly shown in the figure; the axis of this pinion is adapted to the axle A A′, and is provided with an endless screw which gears into a cylindrical pinion fixed upon the axle of the little cylinder *a*. Upon this cylinder is wound the thread which turns the conical drum *b*; upon the axle of this drum is fixed a cylinder around which is wound the band of paper, unwound from the cylinder *c* by passing over the cylinder *d*. It will be seen that the conical pinion being carried round with the axle A A′, and the collar F F′ being fixed in space, the pinion is forced to assume a rotary motion about its own axis, and it communicates this motion to the band of paper. If the pencil *p* were solid with the axle A A′, it would trace upon this band a straight line, which, according to the arrangement adopted, would be the middle of the rectangle it forms; but as the pencil is fixed to the wheel, and consequently follows the flexion of the spring, it traces a curve, the ordinates of which, with reference to this middle line, represent the flexions of the spring, that is, the forces transmitted; whilst the abscissæ, reckoned according to this same middle line, that is, the distances run through by the band of paper, represent the distances described by the point of application of this force. The work effected is, therefore, again represented by the area of the curve traced upon the paper.

It must be remarked that the axis of the conical pinion is in a plane perpendicular to that of the axle A A′, but that these two axes never meet.

We have here an example of helicoid gearing, which might be replaced by a hyperboloid gearing.

The spring is balanced by a counterpoise on the opposite side of the axle. And to avoid the risk of breaking the spring the displacing of the wheel is limited.

As in the case of the traction dynamometer, the tell-tale wheel may be substituted for the band of paper and the style. The solid wheel, perpendicular to the axle A A′, is put in motion by a toothed wheel turned by the endless screw upon the axle of the conical pinion. The little tell-tale wheel is affixed to the wheel B. When at rest, the little wheel occupies the centre of the solid wheel; but when in motion, it recedes from it by quantities proportional to the flexions of the spring; so that the number of revolutions that it makes in a given time is again proportional to the product of the force exerted by the distance run through, that is, to the work effected. With this apparatus, the experiment may be continued for a day, a week, or even a month, if the various parts are properly proportioned.

The principle of the instruments we have described is due to M. Poncelet. The Bentall and Saurines dynamometer are founded on the same principle.

The former of these instruments is used to compute the work of ploughs. Its chief part is a spiral spring carried upon wheels and fixed by one end to the plough and by the other to the swing-bar to which the power is applied. The fore end of the spring is connected with the horizontal axle of a small wheel which rests upon a horizontal solid wheel; the latter receives a rotary motion about a vertical axis, which is proportional to that of the vehicle; and the small wheel recedes from the centre by a quantity proportional to the flexion of the spring. Whence it follows, that the number of revolutions made in a given time is proportional at once to the force exerted and to the distance traversed, and consequently to the work done by the motor. Unfortunately this instrument is liable to be thrown out of order by the inequalities of the soil, and it does not always give exact results.

The dynamometer introduced into the French navy by M. Saurines serves to compute the work consumed by the helicoid screw-propellers. In screw vessels, the axle of the cranks of the steam-engines runs into the axle of the screw, to which it is fixed. Saurines' dynamometer is placed at the point of interruption of those two axles. To the end of the crank-axle are fixed two equal arms diametrically opposed; and to the corresponding end of the screw-axle are fixed two similar arms, but placed at right angles with the first two. The ends of the latter are connected with the ends of the other two by flat springs, thinner at the middle than at the ends, and presenting a natural curve which has a tendency to diminish under the influence of a longitudinal tractive force. It will be seen that the crank-axle cannot turn the screw-axle except through the medium of these springs which yield by a quantity proportional to the force exerted. It is, however, not this deformation that is measured directly. The middles of the opposite springs are connected by steel bars; when the springs by yielding tend to become straight, their middles approach the axis of rotation, and force the steel bars to bend. It is this flexion that is used to compute the work transmitted. For this purpose, a piece of paper is placed on a fixed cylinder having the same axis as the revolving axles; and perpendicularly to the surface of this cylinder are placed two pencils, carried round by the general rotary motion. The first, which is fixed with respect to the axle of the cranks, traces on the paper the line *zero*, the one corresponding to no force transmitted. The second, fixed to the steel bars, which tend to move it in the direction of, and along the length of the axle, but held at the same time by a spring, traces upon the cylinder a curve which deviates from the line *zero* by quantities proportional to the force transmitted. The area comprised between this curve and the line zero is, therefore, proportional to the work effected. This arrangement, invented by M. Saurines, enables us to compute easily the large amount of work transmitted to the screw of powerful vessels, often amounting to more than 2000 horse-power. To obtain correct results, however, the engines must not exert too variable a force.

Bourdon has lately invented a rotation dynamometer that is quite new in its arrangement. It consists of two cogged wheels of helicoidal gearing, equal and with parallel axes, which tooth into each other. One of them receives the motion of the motor by means of a belt; the other transmits in like manner to the operator the motion which it has received from the first. But its axis may be displaced in the longitudinal direction, by resting at one of its ends, against a spring. The pressure which this second wheel receives from the first has a component parallel to the axis which is proportional to it; this component produces a slight displacement of the axis which causes the

spring to yield by a certain quantity. This flexion is transmitted to an index which moves on a divided circular arc. By means of this arrangement very considerable forces may be measured by employing only thin and very flexible springs. Knowing besides the distance described by the point of application of the motive force, we are in possession of all the elements necessary to compute the work transmitted.

It remains for us to say a few words of the instrument known as the *American dynamometer*, invented by White, which is founded on a principle quite different from those of the preceding. This dynamometer, which serves to measure the work on engines, offers an application of the Roman balance. It is represented in Figs. 2591, 2592. Upon a horizontal axis *a b* are mounted; 1, a pulley A which receives the motion from the motor, by means of a belt; 2, a loose pulley A', equal to the first, upon which the belt is passed when it is required to stop the apparatus; 3, a pulley B which transmits the motion and is designed to overcome the resistances; 4, a loose pulley equal to B, B'; 5, two bevelled gear-wheels C and D, both of which tooth into two other similar wheels equal to each other E and F. The axis of each of these is connected with the beam of a kind of Roman balance O M N, held in equilibrio by a counterpoise Q. On the long arm M N of this beam slides a running weight P, and this arm is divided into equal parts.

2591.

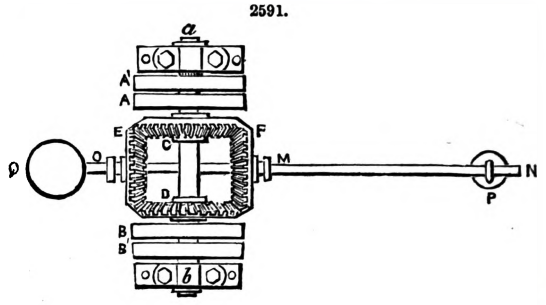

2592.

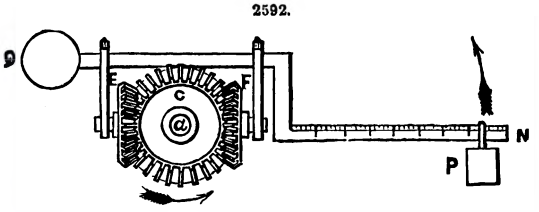

Suppose that the motion of the driving pulley A takes place in the direction of the first arrow. If the belt be thrown off on the side of the resistance, the beam has a tendency to be drawn in the direction of the second arrow, and the dynamic equilibrium can be restored only by hooking the P to the ring and by giving it a proper position on the beam, whence we easily deduce the momentum of the force P, equal to that of the resistance, and consequently the resistance itself; since it acts tangentially to the pulley B, the radius of which is known. A tell-tale put in motion by the revolving axle by means of an endless screw gives the number of revolutions and fraction of a revolution which the axle makes in a given time. Thus we have the two elements of the work to be measured, and consequently this work itself.

To prevent the oscillations of the beam during the experiment, or at least to reduce the magnitude of them, its extremity is attached to a piston which moves within a cylinder, the air in the cylinder being compressed by the motion of the piston. See ACCELERATION. ANGULAR MOTION, or VELOCITY. BALANCE. BELTS. BRAKE.

DYNAMOMETER CAR. FR., *Wagon Dynamomètre*; GER., *Dynamometer-Wagen*; ITAL., *Dinamometro di trazione*; SPAN., *Wagon dinamométrico*.

This ingenious and useful machine, shown in Figs. 2593 to 2597, was employed by MM. Vuillemin, Guebhard, and Dieudonné, in making their useful and extensive experiments on the resistance of railway trains, and on the power of locomotive engines. The results obtained by this accurate and complete machine, with respect to the different elements involved in the motion of carriages and engines on railways, on account of their practical importance, we give at full length.

To determine the resistance of a single carriage or of an engine to traction, we have had recourse to two methods.

First Method.—This consisted in driving the engine or the carriage at a certain velocity, and then suddenly leaving it to itself till it stopped. The distance was then measured from the point at which the retardation of the motion began to the point where it became nul.

Let m be the mass of the vehicle;
v_0 its initial velocity (in mètres a second);
s the space traversed (in mètres);
x the mean resistance during the traversing of this space (in kilogrammes).

If the line is level, we shall have the following equation;—

$$\frac{1}{2} m v_0^2 = x \times s. \qquad [\alpha]$$

The mean value of the resistance x may be determined.

The equation [α] must be completed by a term taking into account the rotatory force of the wheels. This force tends to impel the vehicle forwards. We shall give later the details of the calculation relative to this correction, and it will be seen that, for a carriage, a term $25 v_0^2$ must be added to the first member of the equation. We shall then have

$$\left(\frac{1}{2} m + 25\right) v_0^2 = x \times s. \qquad [\beta]$$

This method may be employed to determine the resistance for a given velocity, or the tractive power which must be exerted upon the vehicle to maintain this velocity. Suppose that, during the time of retardation, a certain number of points have been marked for the time and the space. We may then construct the curve of the spaces traversed as a function of the time, $s = f(t)$. If

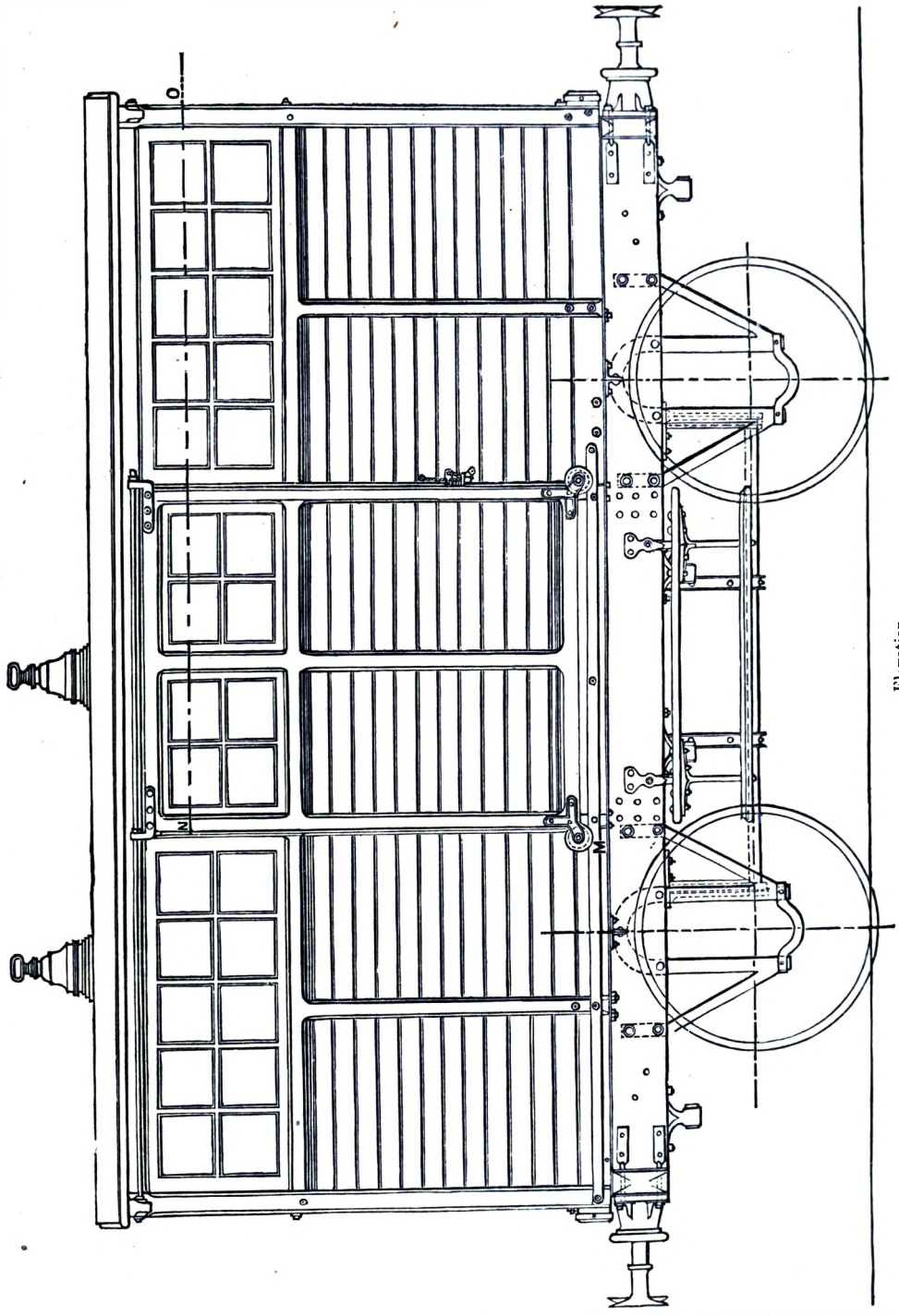

2693. Elevation.

now we construct the tangents to the different points of this curve, and measure the angles of these tangents with the axis of the abscissæ; the geometrical value of these tangents, measured with a circle whose radius is one, will represent the velocities at the different points. We may thus trace the curve, $v = f'(t)$. Proceeding in the same manner with this second curve, we deduce

the curve of the accelerations, $j = f''(t)$. Multiplying the acceleration j at a determinate instant by the mass m, we obtain the force applied, $F = mf''(t)$. Thus, having constructed the curve of the accelerations, we have only to multiply the ordinates by a constant m, to find the retarding force at the different instants.

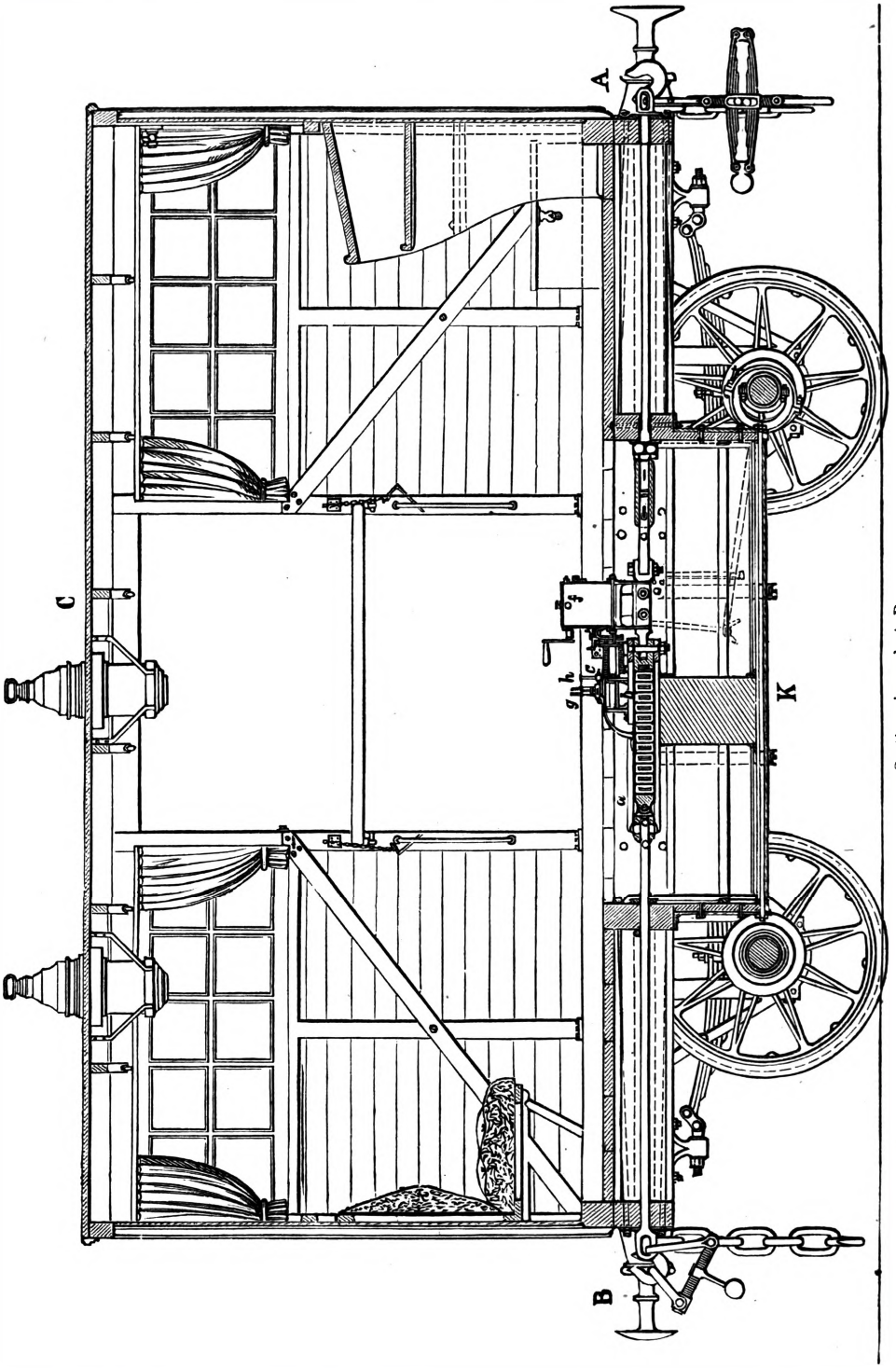

Section through A B.

Second Method.—This consisted in making experiments with a dynamometer. The apparatus is placed in a covered carriage which is attached immediately to the tender. The coupling rod is connected with the movable portion *a* of the dynamometrical spring; the fixed portion *b* of this

spring is firmly attached to the framework of the carriage. In this way, the tractive force is made to pass through the spring before it acts upon the carriage.

The movable portion *a* carries a vertical pencil *c*, which moves forwards or backwards in a vertical plane, according as the spring bends more or less. Beneath the pencil, a strip of paper

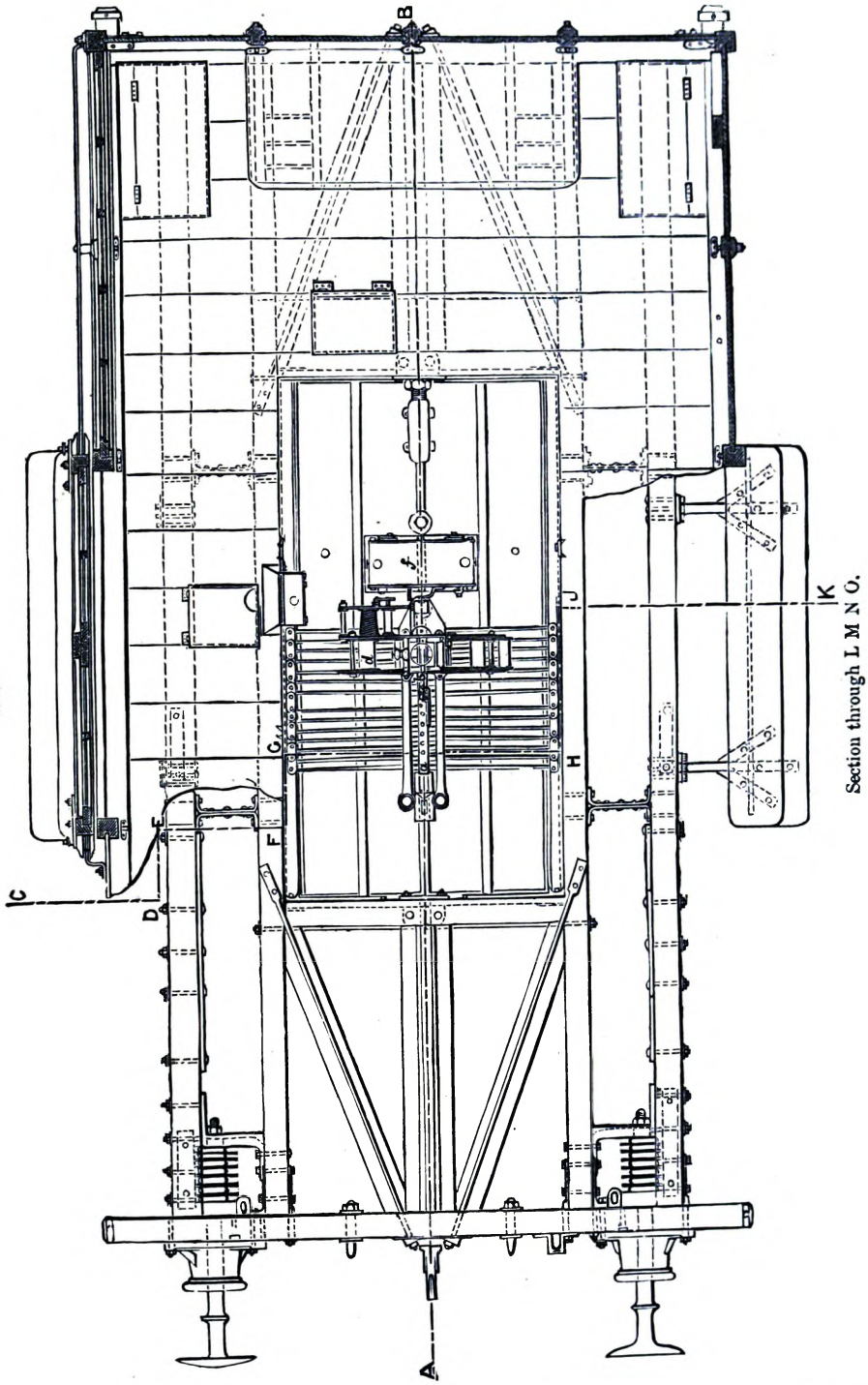

moves in a horizontal plane around a roller *d*, which is kept in motion by a piece of clockwork in the box *f*.

The distances are marked by hand, by means of the pencil *g*. They are also noted by means of a tell-tale in the box *l*. The chief wheel of this tell-tale is turned by a click, which is acted

upon by an eccentric placed on the axle of the carriage. The hand, or needle, makes one revolution a kilomètre: the divisions of the dial are of 10 mètres.

If this instrument should get out of order in rounding curves or while the train is being shunted at stations, it is easily rearranged by means of the kilomètre-posts on the line.

The pencil *h* serves to show the time, but it is necessary to mark the time by hand as well, because the strip of paper does not unroll itself at a uniform rate on account of the jolting which deranges the clockwork. The unrolling of a strip occupies about an hour; it may be replaced by another strip in five minutes

2596

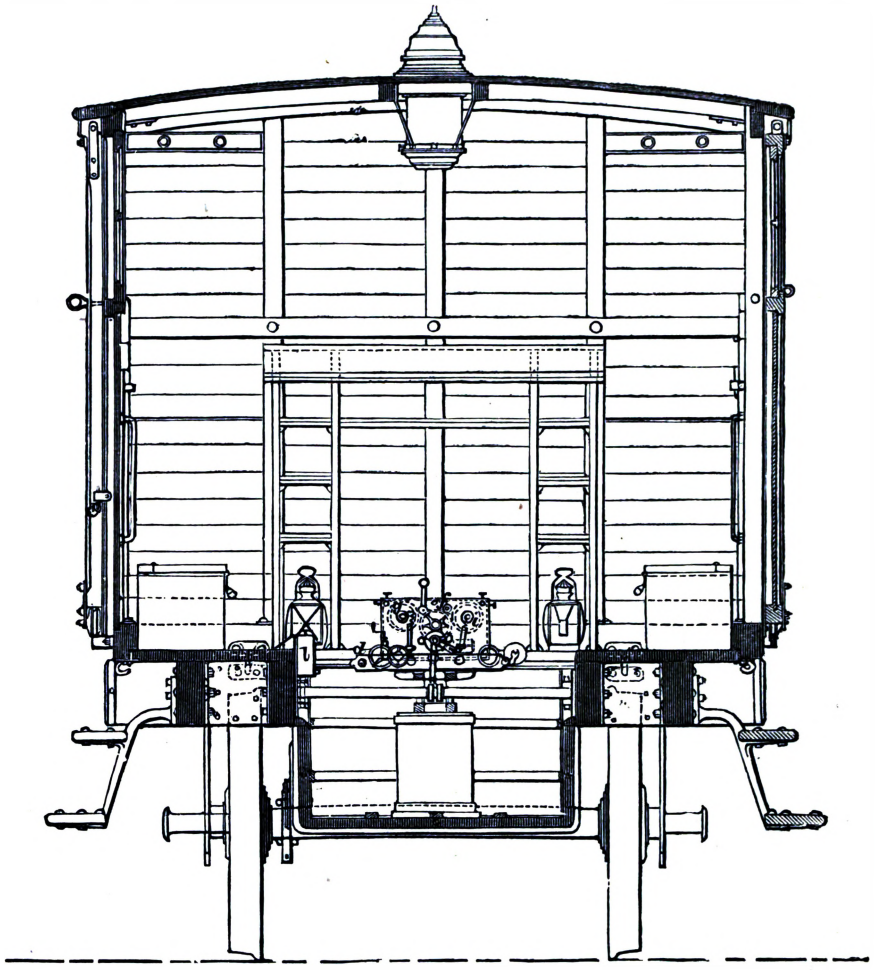

Section through C D E F G H J K.

A vane placed on the top of the carriage turns inside an indicator upon a divided circle. We are thus enabled to ascertain, when stationary, the angle which the wind makes with the axis of the carriage. By the side of the wind indicator is a compass, which gives the angle of the magnetic meridian with the axis of the carriage: we thus find the direction of the wind.

The temperature is shown by a thermometer.

Fig. 2597 gives the details of the dynamometrical spring. It is composed of fourteen pieces of $1^{m} \cdot 04$ in length; the ends of two adjacent pieces are connected by two bolts and two small washers. The spring is easily put together or taken to pieces; according as the tractive strain is to be more or less great, the whole or a part only may be made to act.

The deflections of the spring were carefully measured and noted with respect to the force exerted upon it, before it was used in the dynamometer carriage.

There is a scale for each coupling, namely, for two pieces, for four pieces, &c., and for fourteen pieces. The deflections are nearly rigorously proportional to the forces. This large spring, which was made by Messrs. Petin and Gaudet, is an excellent one; its flexibility was in no degree altered by the experiments made with it; to test it, its deflections were tried after it had been in use some time, and they were found to correspond exactly with those of the first trials.

To determine the resistance of passenger or goods trains, we always had recourse to the method of the dynamometer.

Resistance of a Single Carriage.—First Method.—The experiments connected with this subject

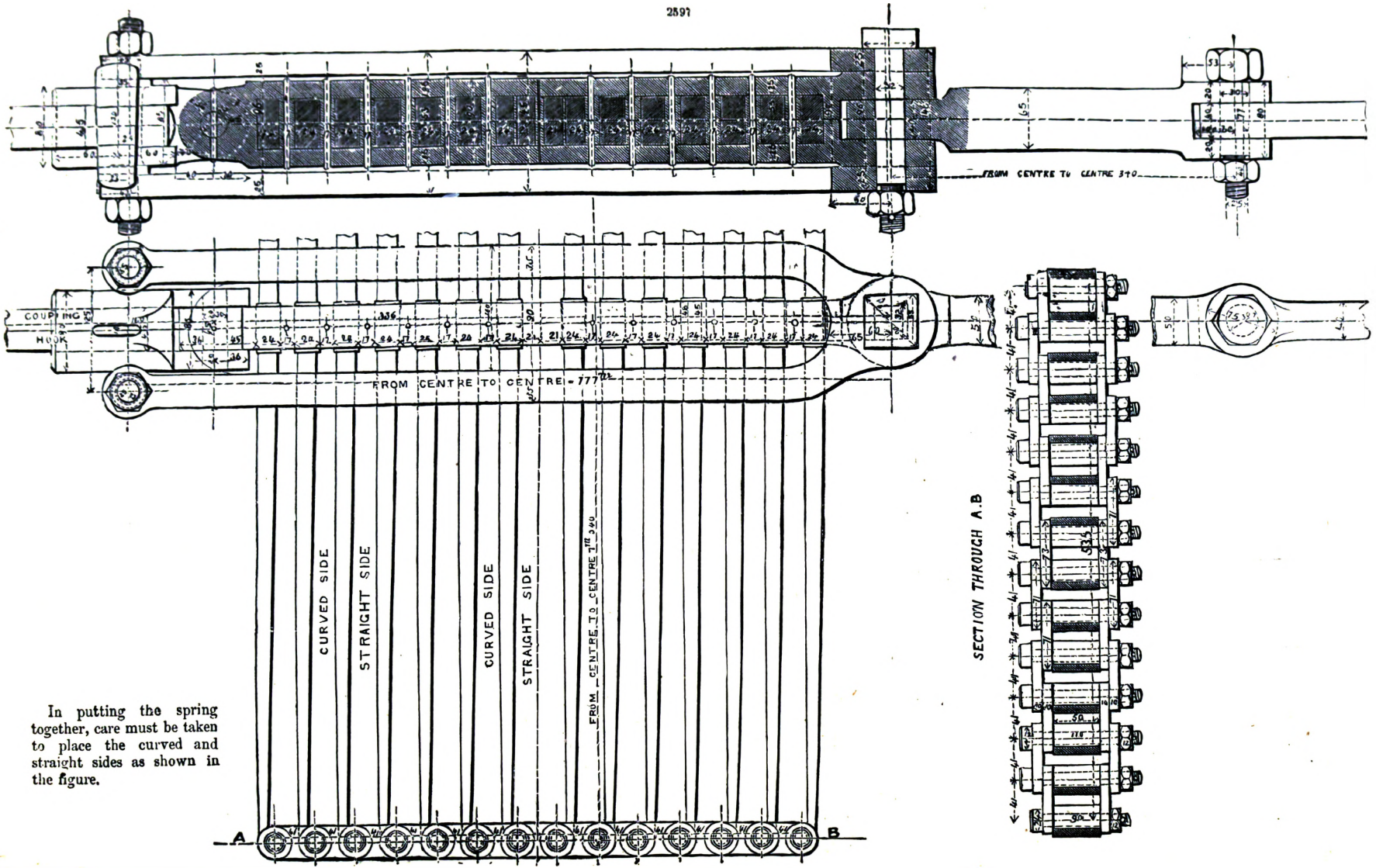

In putting the spring together, care must be taken to place the curved and straight sides as shown in the figure.

Spring for the Dynamometer.

were made between Epernay and Châlons. This portion of the line, 18 kilomètres in length, is eminently favourable to trials of this kind; the incline is uniform and very gradual (gradient = $0^{m}\cdot4$), descending from Epernay to Châlons; besides this, the line is straight for a distance of 10 kilomètres in one place and 3 in another, and the curves are all short and of a long radius (radius = 2 to 3000 mètres).

The mean temperature was 25 degrees centigrade.

Mean Resistance of a Carriage driven at different Velocities.—The covered, four-wheeled, dynamometrical carriage with which the experiments were made was furnished with oil-boxes, and weighed 5500 kilogrammes.

		Mètres.
Dimensions	Height	2·30
	Breadth	2·60
	Length	4·90

Diameter of the wheels = 1 mètre.

This carriage was attached immediately to an engine, the operator inside being provided with a distance-counter and a chronometer. When the speed agreed upon was reached and had become uniform, at a given signal the carriage was detached from the engine, and left to itself till it stopped. This experiment was repeated several times with various initial velocities.

2598.

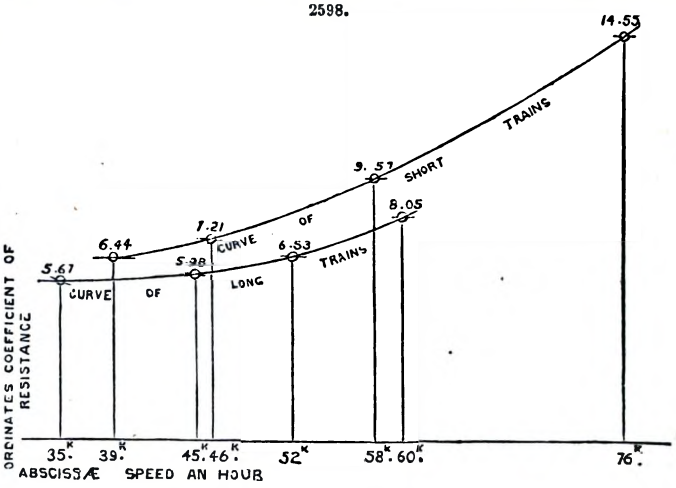

Curves of Resistances of Passenger Trains.

Scale of $\begin{cases} 2^{mm}\cdot5 \text{ a kilomètre.} \\ 5^{mm} \text{ a kilogramme.} \end{cases}$

Five experiments of this nature were made, the results of which are given in the following Table;—

Nature of the Line. Gradients.	Initial Velocity in mètres a second.	Distance travelled.	Resistance deduced from the Formula.	Resistance corrected for Gravity.	Coefficient of Resistance a ton.
mill.	mètres.	mètres.	kils.	kils.	kils.
0·4	5·00	385	19·80	17·60	3·20
0·4	6·65	550	24·60	22·40	4·07
0·4	13·90	1333	44·20	42·00	7·63
0·4	13·90	1408	41·70	39·50	7·18
0·4	12·50	1347	35·30	33·10	6·03

It was necessary to reduce slightly the total resistance of the carriage, calculated by formula [β], on account of the inclination of the line. This was accomplished by supposing that the resistance was increased $0^{k}\cdot4$; this gives for the carriage, $5\cdot5 \times 0\cdot4 = 2^{k}\cdot2$. We shall see later that these figures correctly represent the influence of gravity upon the resistance of carriages on a gradient of $0^{m}\cdot4$.

The last column of the preceding Table gives the mean coefficient of resistance for a covered carriage, such as the one we have described, rolling upon a straight and level line. Its increase with the initial velocity cannot fail to attract attention. We cannot give exactly the speed to which the foregoing coefficients correspond; for the mean speed is not equal to the mean of the extremes, that is, to the half of the initial velocity. It was observed that it was considerably less than this half, especially when the initial velocity was great, because the resistance increases with the speed.

To determine the law of variation of the coefficients with the speed, we had recourse to the graphic method already described. This method is certainly of difficult application; errors of observation, errors that can hardly be avoided in the construction of the tangents may be multiplied from one curve to another; the results which we have obtained are, however, tolerably good. This method was applied to the first four experiments noted in the preceding Table.

Figs. 2599 to 2602 represent the four series of curves.

The extreme portions of the curves of acceleration are less accurate than the mean portions, on account of the graphical construction of the tangents. Grouping the figures given in Figs. 2599 to 2602, and making the correction for gravity, we obtain the following Table, which gives the law of the resistances on a level line from 0 to 35 kilomètres an hour.

Speed an hour.	Resistance of the Carriage.	Coefficient of Resistance a ton.	Speed an hour.	Resistance of the Carriage.	Coefficient of Resistance a ton.
kilomètres.	kilogrammes.	kilogrammes.	kilomètres.	kilogrammes.	kilogrammes.
35	42	7·6	10 to 15	19	3·4
25 to 30	35	6·3	5 „ 10	14	2·5
20 „ 25	30	5·4	1 „ 5	11	2·0
15 „ 20	24	4·3	0	48	8·7 (starting)

2599.

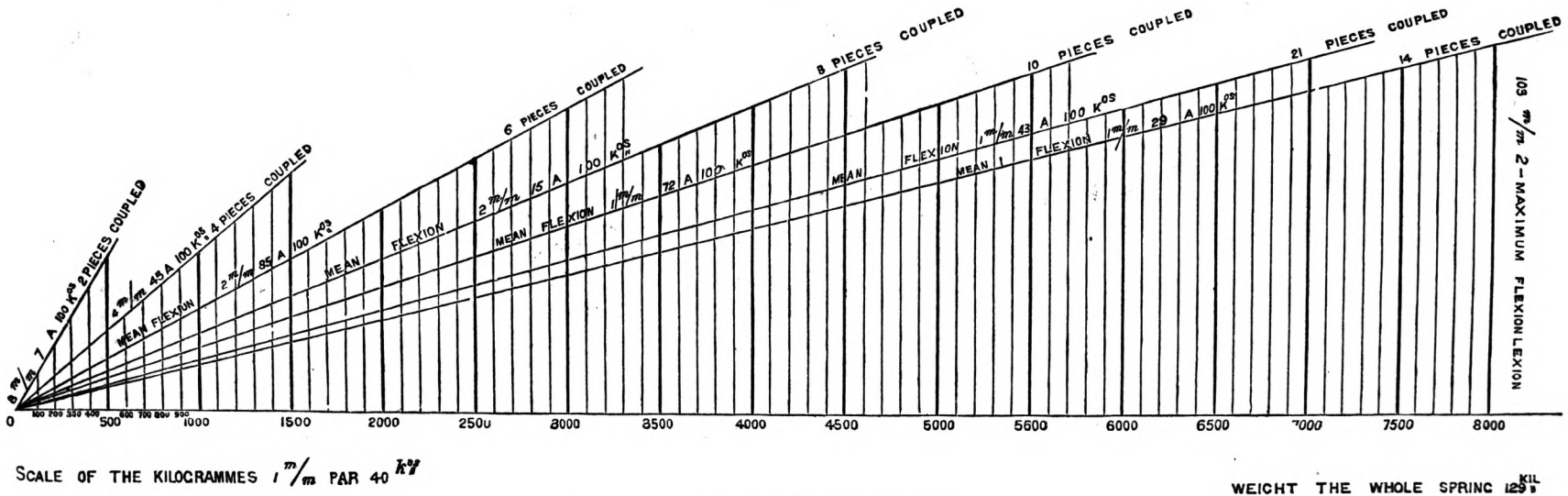

SCALE OF THE KILOGRAMMES $1\,^{m}/_{m}$ PAR 40 ^{kil}

WEICHT THE WHOLE SPRING 129 ^{KIL}

SCALE OF THE FLEXIONS $\frac{1}{2}$

Dynamometer. Scale of the Flexions of the Spring.
Trials of the 10th May. 1865.

2600.

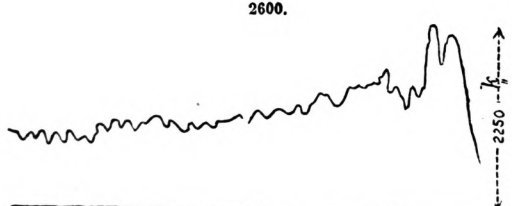

2601.

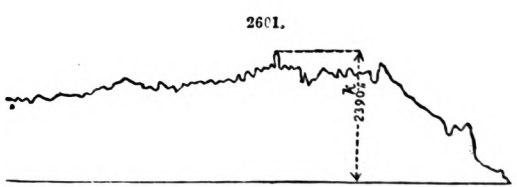

Dynamometrical Curves.
Train (2) 16 of the 5th June, 1866, starting from Charleville.

Train 75 of the 13th February, 1865, starting from d'Oiry.

Second Method.—The dynamometer carriage being attached to an engine, its own resistance was first determined, which is, therefore, alone represented by the curve. It will be interesting to compare this result with those given previously.

Graphic Method applied to a Single Vehicle.

2602.

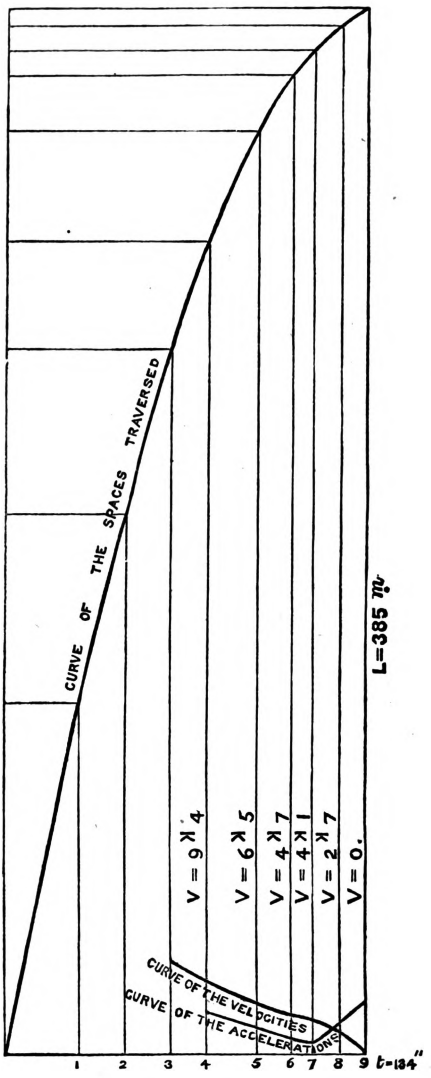

Scale { ½ mill. a mètre. Ordinates.
½ mill. a second. Abscissæ.

First Experiment on the Rolling of the Dynamometer Carriage. Weight 5500k.

Results.

For V =	9k·4	F = 29k·20	f = 5k·28
„ V =	6k·5	F = 20k·70	f = 3k·76
„ V =	4k·7	F = 13k·90	f = 2k·53
„ V =	4k·1	F = 12k·50	f = 2k·27
„ V =	2k·7	F = 20k·70	f = 3k·76
„ V =	0k	F = 52k·30	f = 9k·50

2603.

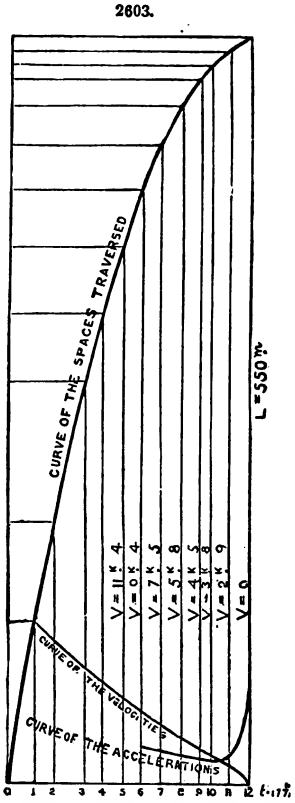

Scale { ½ mill. for 2 mètres. Ordinates.
½ mill. for 2 seconds. Abscissæ.

Second Experiment on the Rolling of the Dynamometer Carriage. Weight 5500k.

Results.

For V =	9k·4	F = 21k·00	f = 3k·82
„ V =	7k·5	F = 18k·40	f = 3k·33
„ V =	5k·8	F = 17k·00	f = 3k·07
„ V =	4k·5	F = 13k·90	f = 2k·70
„ V =	3k·8	F = 13k·60	f = 2k·47
„ V =	2k·9	F = 14k·60	f = 2k·65
„ V =	0k	F = 46k·50	f = 8k·42

The tractive power requisite for the carriage alone is very small, and must be measured in a special manner. Indeed, the smallest error in drawing the line of the abscissæ, due either to the play of the paper upon the rollers, or to a faulty arrangement of the pencil, would be a considerable fraction of the quantity to be measured; we were thus led to adopt an artifice. The carriage was first drawn at a uniform speed, the line *a b* being marked by the pencil; the engine was then

suddenly detached, and the same pencil marked the line cd; the distance l between the two lines exactly measures the resistance of the carriage.

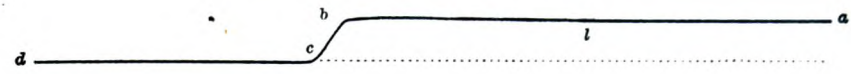

The resistance was then found to be

25 kilogrammes at the speed of 25 kilomètres an hour, say $4^{k}\cdot54$ a ton.
50 „ „ 50 „ „ $9^{k}\cdot10$ „

These figures are a little less than those found by the first method; this is owing to the tenders having covered a portion of the front of the carriage.

Graphic Method applied to a Single Vehicle.

2604.

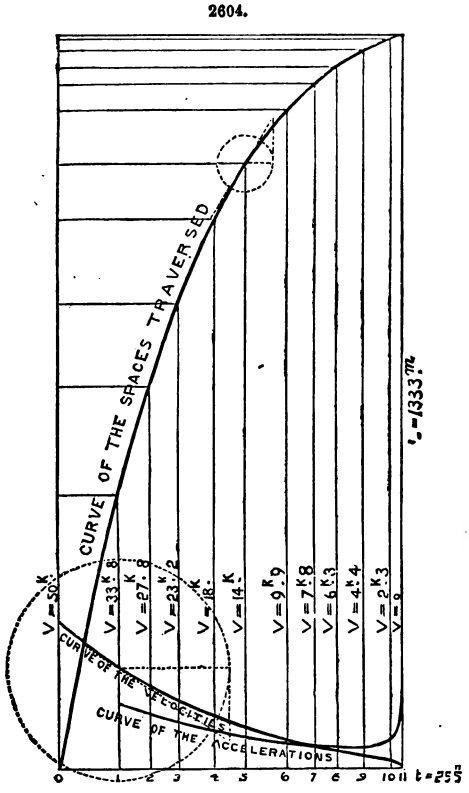

Scale { ½ mill. for 5 mètres. Ordinates.
½ mill. for 2 seconds. Abscissæ.

Third Experiment.

Results.

For V =	$33^{k}\cdot8$	F = $44^{k}\cdot16$	$f = 8^{k}\cdot05$
„ V =	$27^{k}\cdot8$	F = $37^{k}\cdot0$	$f = 6^{k}\cdot78$
„ V =	$23^{k}\cdot2$	F = $32^{k}\cdot30$	$f = 5^{k}\cdot87$
„ V =	$18^{k}\cdot0$	F = $26^{k}\cdot78$	$f = 4^{k}\cdot88$
„ V =	$14^{k}\cdot0$	F = $22^{k}\cdot09$	$f = 4^{k}\cdot02$
„ V =	$9^{k}\cdot9$	F = $17^{k}\cdot39$	$f = 3^{k}\cdot16$
„ V =	$7^{k}\cdot8$	F = $15^{k}\cdot45$	$f = 2^{k}\cdot82$
„ V =	$6^{k}\cdot3$	F = $15^{k}\cdot0$	$f = 2^{k}\cdot72$
„ V =	$4^{k}\cdot4$	F = $13^{k}\cdot8$	$f = 2^{k}\cdot52$
„ V =	$2^{k}\cdot3$	F = $21^{k}\cdot1$	$f = 3^{k}\cdot84$
„ V =	0^{k}	F = $50^{k}\cdot6$	$f = 9^{k}\cdot20$

2605.

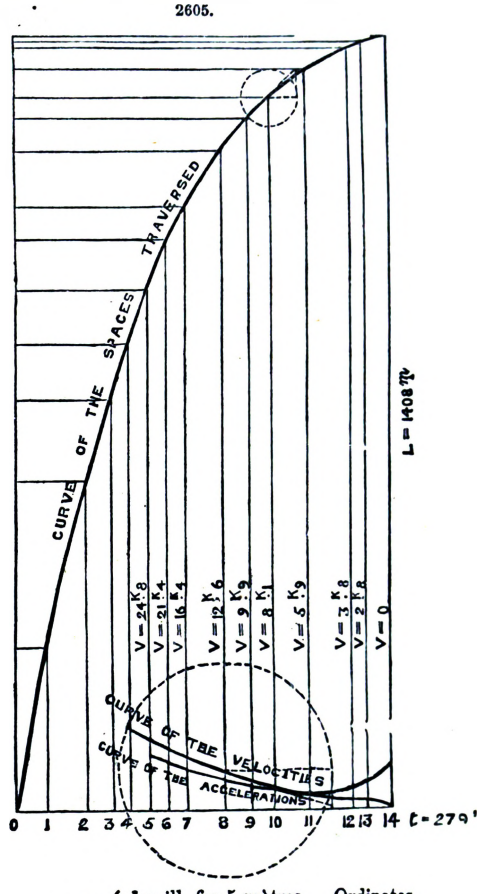

Scale { ½ mill. for 5 mètres. Ordinates.
½ mill. for 2 seconds. Abscissæ.

Fourth Experiment.

Results.

For V =	$24^{k}\cdot8$	F = 34^{k}	$f = 6^{k}\cdot17$
„ V =	$21^{k}\cdot4$	F = $30^{k}\cdot5$	$f = 5^{k}\cdot54$
„ V =	$16^{k}\cdot4$	F = 25^{k}	$f = 4^{k}\cdot55$
„ V =	$12^{k}\cdot6$	F = $20^{k}\cdot8$	$f = 3^{k}\cdot78$
„ V =	$9^{k}\cdot9$	F = $17^{k}\cdot2$	$f = 3^{k}\cdot12$
„ V =	$8^{k}\cdot1$	F = $11^{k}\cdot6$	$f = 2^{k}\cdot12$
„ V =	$5^{k}\cdot9$	F = $11^{k}\cdot1$	$f = 2^{k}\cdot02$
„ V =	$3^{k}\cdot8$	F = $11^{k}\cdot4$	$f = 2^{k}\cdot07$
„ V =	$2^{k}\cdot8$	F = $17^{k}\cdot2$	$f = 3^{k}\cdot12$
„ V =	0^{k}	F = $29^{k}\cdot5$	$f = 5^{k}\cdot35$

The coefficient of resistance a ton, at starting, $8^{k}\cdot7$, given by the last Table, was also verified approximatively by means of a small dynamometer with a spiral spring, placed in the chain, by which the carriage was gently drawn until its inertia was overcome.

Resistance of Engines at different Velocities.—First Method.—The experiments in this case were made between Epernay and Châlons; the engines and tenders were carefully weighed at Epernay before starting, and again on their return, the object being to determine the resistance of engines under ordinary conditions, that is, having their steam up and being properly greased.

The engines were started at different velocities, and when the speed had become uniform, the steam was shut off and the engine left to itself till it stopped. The distance and the time were measured by a chronometer and a distance-counter.

The initial motive force is composed, not only of the force due to the rectilineal velocity of the total mass, but also of the force due to the rotation of the revolving masses (see Note A, later). The engines submitted to these experiments were of two kinds, No. 15 a goods engine, and No. 14 used for mixed trains (Table I.).

V being the velocity at the circumference, in mètres a second, the motive force of rotation of the engine axles will be expressed as follows;—

$18{\cdot}4 \times V^2$ for wheels of 1·20 mètre.
$20 \times V^2$ „ 1·30 „
$27{\cdot}4 \times V^2$ „ 1·68 „

Admitting this, let

s be the space traversed;
M, the total mass in motion;
V, the initial velocity in mètres a second,
a, the known resistance of the auxiliary carriage;
x, the unknown resistance of the motor (engine and tender);
b, a known term (depending on the revolving masses);

we have the formula

$$\left(\frac{1}{2}\,M + b\right) V^2 = (a + x) \times s. \qquad [\gamma]$$

As an example of the application of this formula [γ], let us take trial No. 1, Table II.

The mixed engine No. 249, system 14, the tender 440, and the auxiliary carriage, in all three vehicles, were driven at a speed of 20 kilomètres an hour, and they stopped in 427 mètres; the time spent in traversing this space was 2 minutes 30 seconds, from which it follows that the mean speed was 10 kilomètres an hour.

We have, besides,

$$\frac{1}{2}\,M = \frac{1}{19{\cdot}62} \times (50400 + 5500) = 2850.$$
$$b = 25 + 2 \times 27{\cdot}4 + 3 \times 18{\cdot}4;$$

whence

$$b = 135,$$
$$V^2 = 5{\cdot}55^2 = 30{\cdot}8,$$
$$a = 19{\cdot}80, \qquad s = 427.$$

Substituting these values in the equation [γ], we find $2985 \times 30{\cdot}8 = (19{\cdot}80 + x) \times 427$; whence $x = 196$.

Thus the mean resistance of the *engine and tender*, during the time of retardation, was 196 kilogrammes; if the line had been perfectly level, the resistance would have been diminished by $0{\cdot}4 \times 50{\cdot}4 = 20^k{\cdot}16$; say 20 kilogrammes. There remain 176 kilogrammes, which makes $3^k{\cdot}50$ a ton.

Notwithstanding a few variations, which may be attributed to the condition of the line and to different degrees of lubrication, it will be seen that the coefficients of Table II. may be arranged so as to furnish a law of continuous increase with the initial velocity. The variation of the coefficients from one engine to another of the same type, with an equal initial velocity, may be explained by the more or less perfect working of the parts subject to friction. For different types, besides this reason, the variation depends upon the dissimilarity of the mechanism. The relative inferiority of the coefficients for engines Nos. 253 and 0·155 is owing to the tenders of these engines being provided with oil-boxes.

From Table II. we find that for the two mixed engines the coefficient f of the mean resistance a ton has the following values;—

For an initial velocity of 20 to 29 kilomètres, say a mean velocity of 11^k, $f = 3^k{\cdot}20$
„ „ 30 to 39 „ „ „ 15^k, $f = 4^k{\cdot}00$
„ „ 40 to 49 „ „ „ 20^k, $f = 4^k{\cdot}35$
„ „ 50 to 60 „ „ „ 23^k, $f = 5^k{\cdot}70$

The goods engine No. 0·123 gives;—

For an initial velocity of 20 to 25 kilomètres, say a mean velocity of 9^k, $f = 5^k{\cdot}32$
„ „ 25 to 35 „ „ „ 12^k, $f = 6^k{\cdot}43$
„ „ 35 to 40 „ „ „ 16^k, $f = 7^k{\cdot}52$

The results of engine No. 0·155 cannot be combined with those of engine No. 0·123, because they are not sufficiently numerous. The graphic method of the curves of acceleration was not applied to these experiments.

TABLE I.—KINDS OF ENGINES SUBMITTED TO THE DYNAMOMETRICAL EXPERIMENTS.

	Free Wheels. No. 1.	Free Wheels. No. 2β.	Crampton. No. 8.	Mixed. No. 7.	Mixed. No. 12.	Mixed. No. 14.	Goods. No. 11.	Goods. No. 15.	Goods. No. 20.	Eight Wheels coupled. No. 17β.
Number of driving axles	1	1	1	2	2	2	3	3	3	4
Total number of axles	3	3	3	3	3	3	3	3	3	4
Weight loading the driving wheels (with 15c of water)	9,852k	11,030k	10,275k	18,800k	21,400k	19,600k	26,791k	29,309k	33,000k	46,310k
Total weight (with 15c of water)	22,040k	26,978k	27,275k	25,694k	25,500k	28,805k	26,791k	29,309k	33,000k	46,310k
Diameter and length of the cylinders	38c 56c	38c 56c	40c 56c	42c 56c	42c 56c	42c 56c	44c 60c	42c 61c	44c 66c	50c 66c
Diameter of the driving wheels	1m·69	2m·00	2m·30	1m·69	1m·69	1m·68	1m·43	1m·30	1m·40	1m·26
Position of the cylinders	outside	outside	outside	inside	inside	outside	inside	outside	outside	outside
Distance between the extreme axles	3m·015	3m·875	4m·500	3m·560	4m·240	3m·520	3m·435	3m·300	3m·550	3m·950
Dimensions of the journals: 1st axle	15c/17c	16c/24c	15c/26c	16c/18c	16c/18c	15c/22c	16c/19c	16c/20c	18c/23c	17c/25c
Dimensions of the journals: 2nd axle	16c/15c	16c/18c	13c/22c	17c/16c	16c/18c	16c/18c	17c/17c	16c/18c	18c/23c	17c/25c
Dimensions of the journals: 3rd axle	15c/17c	15c/17c	18c/26c	16c/18c	13c/15c	16c/18c	16c/19c	16c/18c	18c/23c	20c/25c
Dimensions of the journals: 4th axle	15c/17c	15c/17c	18c/26c	16c/18c	13c/15c	16c/18c	16c/19c	16c/18c	18c/23c	17c/25c
Length of the piston-rods	1m·375	1m·650	2m·070	1m·400	1m·900	1m·760	1m·550	1m·720	1m·650	2m·400
Stamp of the boiler	8 atmos.	8 atmos.	8 atmos.	8 atmos.	8 atmos.	8 atmos.	8 atmos.	8 atmos.	8 atmos.	8 atmos.
Surface of the fire-box	5mq·06	6mq·34	6mq·65	6mq·36	7mq·41	7mq·20	7mq·25	7mq·20	8mq·05	9mq·71
Surface of the tubes	62mq·85	69mq·35	84mq·62	81mq·96	74mq·49	93mq·22	91mq·55	93mq·22	113mq·00	183mq·92
Total heating surface	67mq·91	75mq·69	91mq·27	88mq·32	81mq·90	100mq·42	98mq·80	100mq·42	121mq·05	193mq·63
Length of the tubes	3m·760	3m·011	3m·460	4m·055	3m·187	3m·994	4m·017	3m·994	4m·100	5m·000
Mean diameter of the cylindrical parts	0m·970	1m·200	1m·266	1m·198	1m·258	1m·256	1m·258	1m·256	1m·320	1m·500
Volume of water	2mc·040	2mc·628	3mc·355	3mc·444	2mc·800	3mc·445	2mc·999	3mc·445	3mc·926	5mc·220

Note.—The new engines with eight wheels coupled, employed upon steep gradients, have their boilers 28 centimètres longer than the old ones, type 17*8*. Besides this, the pressure in these new engines, numbered 0·526 to 0·600, has been raised to 9 atmospheres.

TABLE II.—EXPERIMENTS ON THE RESISTANCE OF ENGINES AND TENDERS TO MOTION.

Experiments.	Type of Engine and Tender.	Nature of the Line.	Initial Velocity an hour.	Distance Run.	Time in seconds.	Mean Velocity an hour.	Mean Resistance by calculation.	Correction for Gravity.	Mean Resistance on a Level		Mean of the Coefficients.
									Total.	a ton.	
			kiloms.	mètres.		kiloms.	kilogs.	kilogs.	kilogs.	kilogs.	kilogs.
1	Mixed, 249.—Type 14. Tender, 440.—Grease-boxes. Weight 50,000 kilogrammes.	Gradients = 0·4 millimètre.	20	427	150	10	196	20	176	3·50	3·48
2			20	430	157	10	194	20	174	3·46	
3			30	688	194	12	292	20	272	5·38	
4			33	840	210	14	256	20	236	4·68	4·59
5			33	1115	269	15	187	20	207	4·20	
6			38	1465	304	17	183	20	203	4·10	
7			45	1640	280	21	243	20	223	4·42	4·81
8			45	1437	280	18	283	20	263	5·20	
9			51	2137	362	21	237	20	257	5·20	5·67
10			55	2047	348	21	283	20	303	6·15	
11	Mixed, 253.—Type 14. Tender, 484.—Oil-boxes. Weight 50,500 kilogrammes.		26	740	196	14	188	20	168	3·30	2·92
12			26	910	280	12	149	20	129	2·54	
13			34	1218	290	15	186	20	166	3·28	3·41
14			32	1350	319	15	200	20	180	3·54	
15			43	1730	350	18	203	20	183	3·61	3·90
16			46	2082	362	21	190	20	210	4·20	
17			60	2626	379	25	267	20	287	5·74	5·74
18	Goods, 0·123.—Type 15. Tender, 118.—Grease-boxes. Weight 45,300 kilogrammes.		20	322	130	9	242	18	224	4·92	5·32
19			22	346	130	10	273	18	255	5·63	
20			20	340	130	9	227	18	245	5·40	
21			26	380	132	9	350	20	330	7·28	
22			26	404	135	11	318	20	298	6·53	
23			26	450	146	11	283	20	263	5·82	
24			30	508	150	12	339	20	319	7·00	6·43
25			32	610	165	13	312	20	292	6·45	
26			33	700	171	15	290	20	270	5·96	
27			30	680	170	14	246	20	266	5·88	
28			40	842	182	17	318	20	338	7·45	7·52
29			39	792	180	16	326	20	346	7·60	
30	Goods, 0·155.—Type 15. Tender, 499.—Oil-boxes. Weight 48,600 kilogrammes.		38	990	218	16	276	20	256	5·25	5·59
31			40	1015	214	17	307	20	287	5·93	

Second Method.—Each double journey, from Epernay to Châlons and back, was made with two engines; the dynamometer being placed in the middle, the second engine, drawn on the outward journey, drew, in its turn, the first engine on the return. The hind engine had its regulator closed, its steam shut off, and its waste-pipes open. In the middle of the journey the train was stopped for the purpose of greasing the cylinders of the engine which was being drawn. The types experimented upon were four in number; the results obtained will be found in Table III.

It will be seen that at the ordinary speed, the resistance a ton of the *engine and tender*, for the rolling of these vehicles and the friction of their mechanism when not at work, reaches the following values;—

Goods engine (type 15) .. .. $V = 24^k$, $f = 9^k \cdot 52$
" (type 20) .. .. $V = 26^k$, $f = 10^k \cdot 24$
Mixed engine (type 14) .. .. $V = 45^k$, $f = 6^k \cdot 41$
Engine with free wheels (type 1) $V = 45^k$, $f = 5^k \cdot 48$

The figures found by this method are naturally greater than those obtained by the first process; the speed is generally greater, and the greasing of the cylinders and slide-valves is not the same; here we travel several kilomètres without steam in the cylinders and without grease; in the first method the engine goes but a few hundred mètres after the regulator is closed.

The following are two immediate applications which may be made of the figures we have given above.

1. At their normal speed, 6-wheeled goods engines descend alone, without steam, inclines of 9 to 10 millimètres; and mixed and free-wheeled engines descend alone inclines of 5 to 6 millimètres.

2. To find the total work developed by an engine in front of a train, we must add to the work measured by the dynamometer the work absorbed by the engine itself, both by its transport and by its friction. This may be done by multiplying the above coefficients by the weight of the motor and by the speed.

Type 20 gives a higher coefficient than type 15, though the latter has smaller wheels. The greater resistance of type 20 is probably due to the larger dimensions of the cylinders, and, in general, to a little more friction in the mechanism.

The influence of the speed upon the resistance is clearly seen from the Table; we shall return to this subject later.

TABLE III.—DYNAMOMETRICAL EXPERIMENTS ON THE RESISTANCE OF ENGINES AND TENDERS IN MOTION.

Type of Engine.	Number of the Engine.	Distance run by the Engine since the last general repairs.	Type of Tender.	Weight of the Engine and Tender.	Number of Kilomètres experimented on.	Mean Speed an hour.	Total mean Resistance.	Resistance a ton of Engine and Tender.	Mean of the Resistances a ton.
		kiloms.		tons.	kiloms.	kiloms.	kiloms.	kiloms.	kiloms.
Goods.—Type 15. Six wheels coupled. D = 1m·30.	0·151	18,231	Four wheels, grease-boxes	49 to 50	6	15	437	8·90	9·80
			D = 1m·20	..	10	24	497	10·00	
	0·123	8,013	Four wheels, oil-boxes	50 to 51	4	27	515	10·50	
			D = 1m·20	..	8	22	416	8·20	9·25
					4	34	523	10·30	
								Mean	9·52
Goods.—Type 20. Six wheels coupled. D = 1m·40.	0·295	16,403	Four wheels, grease-boxes	53 to 55	11	23	529	9·62	10·24
			D = 1m·14	..	17	30	582	10·86	
Mixed.—Type 14. Four wheels coupled. D = 1m·70.	249	12,895	Four wheels, grease-boxes	47 to 49	11	30	347	6·92	7·73
			D = 1m·20	..	10	49	417	8·55	
					5	62	588	12·58	
	214	20,943	Four wheels, grease-boxes	51 to 52	15	29	293	6·01	5·65
			D = 1m·20	..	3	27	272	5·30	
	189	3,185	Four wheels, oil-boxes	51 to 53	16	35	300	5·81	5·86
			D = 1m·20	..	5	43	307	5·92	
								Mean	6·41
Free wheels.—Type 1. D = 1m·70.	77	19,623	Four wheels, grease-boxes	37 to 38	15	50	232	6·05	5·48
			D = 1m·00	..	2	41	185	4·92	

Resistance of Locomotives and Tenders at Starting.—There is a special degree of friction at starting, because the condition of the surfaces with respect to lubrification is not the same then as it is after the wheels have made a few revolutions. For each vehicle a minimum force is necessary to overcome its inertia; to determine this force accurately, it must be applied gradually till the mass is set in motion. This is hardly possible when a locomotive is used; in almost every case more force is applied than is necessary. We succeeded, however, in fulfilling the required conditions in a satisfactory degree, by drawing a heavy mixed engine with a small one of free wheels; the latter was obliged to exert all its strength to move the larger engine, the inertia of which was, consequently, gently overcome. It was found in this way that the mixed engine, type 14, with its tender, required a force of 820 kilogrammes, say 15k·90 a ton, and the goods engine, type 15, a force of 19k·70 a ton.

These figures show with tolerable accuracy the value of the friction at starting. If now we start more energetically, the greatest force shown by the curve is not employed merely to overcome the friction, but to give acceleration to the mass acted upon. We have seen applied, to start a mixed engine, a force of 40 kilogrammes a ton, yet the shock produced could not be called violent; and such starts as these are of daily occurrence.

Resistance of Tenders alone.—Experiments were made upon tenders alone by means of the dynamometer, the results of which experiments are given in Table IV. The mean resistance is 5k·16 a ton at a speed of 27 to 32 kilomètres, and 7k·00 a ton at a speed of 45 kilomètres.

TABLE IV.—DYNAMOMETRICAL EXPERIMENTS ON THE RESISTANCE OF TENDERS IN MOTION.

Type of Tender.	Number of the Tender.	Weight of the Tender.	Number of Kilomètres experimented on.	Mean Speed an hour.	Total mean Resistance.	Resistance a ton.	Mean of the Resistances.
		k.		k.	k.	k.	k.
Grease-boxes, four wheels. D = 1m·20.	440	19,510	3	29	99	5·07	5·16
		18,600	4	27	93	4·98	
		18,600	5	32	101	5·43	
		19,510	2	44	128	6·56	7·00
	174	21,400	14	45	160	7·45	

Resistance of Engines with Four Axles coupled.—Four experiments were made to determine in a special manner the resistance of engines with four axles coupled. We had at our disposal a

straight piece of line of only 300 mètres in length; consequently it was impossible to exceed a very moderate speed. The temperature was at + 5 degrees centigrade.

Two engines, Nos. 0·177 and 0·168, were used in these experiments, which were repeated in order to obtain a mean; the former engine had its steam up, the latter was cold. The dynamometrical curve gives the following resistances;—

1. Engine 0·177 (weight of the engine and tender = 63100 kils.).

First trial	1460 kils.
Second trial	1470 „
Mean	1465 „

2. Engine 0·168 weight of the engine and tender = 64700 kils.).

First trial	1300 kils.
Second trial	1370 „
Mean	1335 „

Mean of the two results, 1400 kils., say $21^{k}\cdot50$ a ton. The speed varied from 6 to 10 kilomètres an hour.

The foregoing experiments were made with the greatest care, yet they are not so trustworthy as those made on the 10 to 12 kilomètres between Epernay and Châlons. The resistance of the engine with four axles coupled was found to be at starting 30 kilogrammes a ton.

Resistance of Trains in general.—The dynamometer was always employed to determine the force upon the couplings of the tender due to the resistance of the train. Figs. 2606 to 2609 are an example of the method of experimenting and calculating applied to a portion of the train (E) 74 of the 22nd March, 1867. It is the case of a goods train drawn by an engine with eight wheels coupled upon a steep incline (15 millimètres a mètre).

The time is marked every 30 seconds; the distance every 500 mètres, and when the speed decreased much, every 250 mètres.

The whole of that portion of the Figure which is represented by full lines was drawn at the time of making the experiments; that portion indicated by dotted lines was executed afterwards for the purposes of calculation. As the paper moved from left to right, the curve must be studied from right to left. The pencil which marks the force not being in the same vertical plane as those which mark the time and the distance, the curve must be removed a distance of 95 millimètres, which is the distance between the two planes; the line *a b* represents the force at the moment of passing post 89. The force, the time, the speed, and the work may be calculated for each period of distance.

For example, between posts 88½ and 89 the quadrature of the curve is made by means of two trapeziums; we deduce from it the fact that the mean force was 4190 kilogrammes throughout this distance. There are 3 points representing 30 seconds each, plus a fraction corresponding to 12 seconds; total, 102″. It follows that the speed was $17^{k}\cdot7$ an hour, and that the work was 275 horse-power.

Table V. shows the arrangement of the figures copied from the roller, with the results of calculation.

TABLE V.—TRAIN No. (E) 74 OF THE 22ND MARCH, 1867, FROM VIELSALM TO GOUVY.
Engine No. 0529. (Type with four axles coupled.)

Kilomètre-posts.	Nature of the Line.	Curve of the Line.	Gross weight of the train.	Number and kind of vehicles.	Atmospheric conditions.	Force noted by the dynamometer.	Mean of the forces.	Resistance a ton. Effective.	Resistance a ton. After correction for grav.	Speed an hour.	Mean of the speeds.	Work in horse-power.	Mean of the work.	Observations.
			tons.			kilogs.	kils.	kils.	kils.	kiloms.	kils.			
90	..	..	233	16	A little snow and wind.									G = gradient. Between posts 87 and 86, the highest limit of the oscillations of the curve corresponded to 5200 kilogs.
89·50	..	Minimum radius of the curves 400 mètres.	..	Carriages (all lubricated with oil).		3530	..	..	..	12·1	..	159		
89	G = 15 mill.		..			4590	..	..	..	15·3	..	258		
88·50	..		..		$t = +4^{\circ}$	4190				17·7		275		
88	..		..			4080				19·0		286		
87·50	..		..		..	4110				19·3		293		
87	G = 9 & 15 mill.		..	..	..	3700				20·3		278		
86·50	G = 18 mill.	..	..	..	..	4280				15·3		242		
86·25	..	..	..	..	..	4730	4250	18·24	2·74	11·7	16·8	205	263	The quantity of water consumed from Vielsalm to Gouvy, 1980 litres.
86	..	..	..	..	..	4780				13·6		242		
85·50	G = 15·5 mill.	..	..	..	..	4350				..		..		The combustible used was that known as "briquette."
85	..	..	..	..	..	4170				..		..		
84·50	..	..	..	..	..	4120				18·2		272		
84	..	..	..	..	..	4230				18·1		285		
83·50	..	..	..	..	..	4220				15·5		249		Pressure in the boiler, 9 atmospheres.
83	..	..	..	..	..	4210	..	..	..	17·9	..	280		

2606.

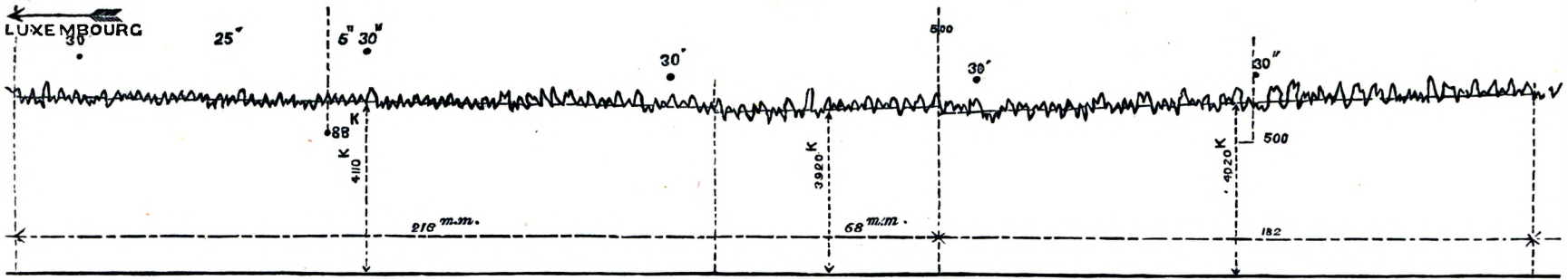

$R = 4080^k$ $V = 19^{km}$
$t = 95^k$ $F = 286^{ch}$

$$\frac{4110 \times 218 + 3920 \times 68}{218 + 68} = 408.$$

$R = 4190^k$ $V = 17^{km}\cdot 7$
$t = 102^k$ $F = 275^{ch}$

$$\frac{4020 \times 182 + 4430 \times 123}{305} = 419.$$

2607.

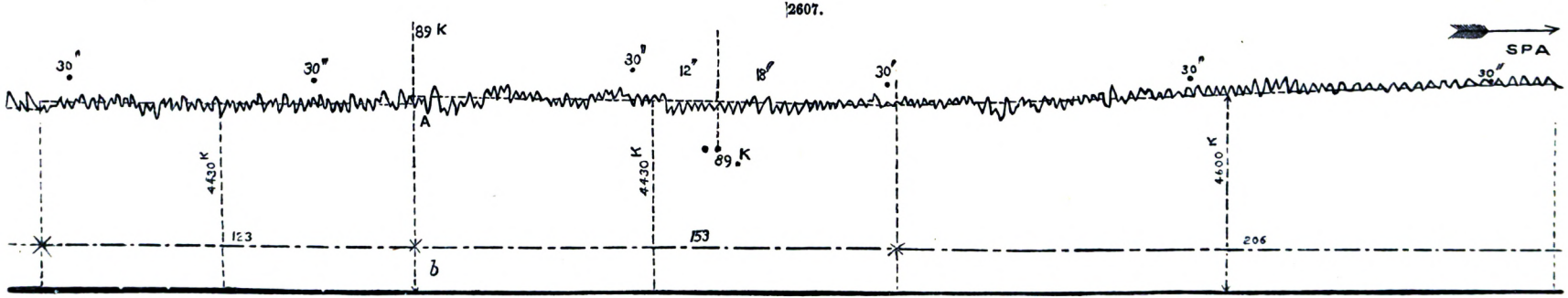

$R = 4590^k$ $V = 15^k\cdot 3$
$t = 118^k$ $F = 258^{ch}$

$$\frac{4430 \times 153 + 4600 \times 206}{359} = 459.$$

2608.

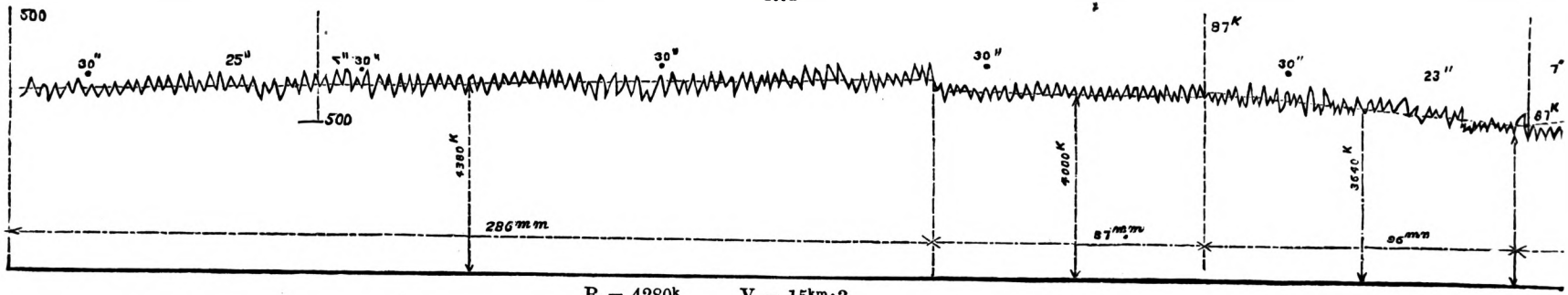

$R = 4280^k$ $V = 15^{km} \cdot 3$
$t = 118^k$ $F = 242^{ch}$

$$\frac{4380 \times 286 + 4000 \times 87}{373} = 428.$$

2609.

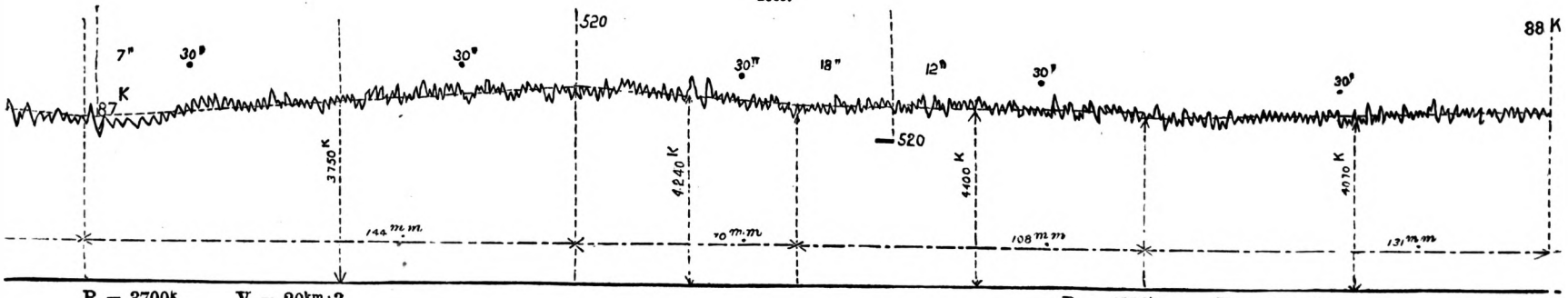

$R = 3700^k$ $V = 20^{km} \cdot 3$
$t = 85^k$ $F = 278^{ch}$

$$\frac{3640 \times 96 + 3750 \times 144}{240} = 370.$$

$R = 4110^k$ $V = 19^{km}\ 3$
$t = 97^k$ $F = 293^{ch}$

$$\frac{4240 \times 70 + 4100 \times 108 + 4070 \times 131}{70 + 108 + 131} = 411.$$

The forces, calculated as already described, are placed opposite the corresponding posts. When the nature of the line has been nearly constant throughout a long distance and the speed has varied but little, we may calculate,—

1. The mean force.
2. The mean speed.
3. The mean work of traction.

When the gross weight of the train is known, we may deduce the mean effective resistance a ton. In the foregoing Table which we give as an example, the mean effective resistance a ton is $18^{k} \cdot 24$. The mean gradient was $15^{mm} \cdot 50$; therefore, the mean resistance, corrected for gravity, is $2^{k} \cdot 74$.

The trains which we experimented on were the ordinary daily trains, our object being to discover *usual* circumstances. From a purely technical point of view, it would no doubt have been much easier to make up special trains fulfilling such and such conditions of loading, of speed, or of lubrification, but this could not be realized in the ordinary work of a railway company.

The results have been collected into several Tables (Tables A to J). Tables A to E inclusive, relate to goods trains; Table F relates to mixed trains; and Tables G to J, to passenger trains. The total distance run during the experiments is;—

1360	kilomètres for	goods trains,
451	„	mixed trains,
1601	„	passenger trains,

which gives a gross total of 3412 kilomètres.

The total number of trains is 139, of which 54 were passenger trains, 9 mixed, and 76 goods trains.

Explanation of the Tables.—A Table similar to No. V. was drawn up for each train.

1. The column headed *Number of Kilomètres experimented over.*—The number of kilomètres in this column is 6 for train (E) 74, which is the last in Table E; this number corresponds to the bracketings in Table V., and not to the whole course of the train. We have thus omitted a certain fraction of the distance, which in some cases has been considerable. We cannot, in calculating the means, take into account those portions of the way which are very irregular, or where the speed has varied greatly. To obtain accuracy in calculations of this kind, the force of traction must have been continuous from one end of the given distance to the other, and nearly uniform. These conditions have been realized throughout the distances given in the column.

2. The column headed *Gross Weight of the Train.*—The gross weight of a train consists of two parts. The dead weight of the carriages, or non-paying load, and the paying load; the dead weight was obtained from the list of the tare, the paying load was given exactly by the guard's books.

3. The column headed *Nature of the Line.*—The incline is absolutely constant, or varies within narrow limits; in the latter case the number in the column is a mean.

4. The columns headed *Force of Traction, Force a Ton.*—The force of traction corresponds to the mean of the ordinates of the dynamometrical curve; the force f a ton, absolute or effective, is obtained by dividing the force of traction R by the gross weight of the train. If, however, there is a correction to be made, to take into account a positive or a negative acceleration (see Note A, later), the absolute force f a ton, though still deduced from the force of traction R, taken from the diagram, is not obtained in so simple a manner as before.

5. The column headed *Force a Ton, corrected.*—That is, after making the correction for gravity. We shall prove later that the coefficient of resistance upon an incline i is equal to $f + i$; that is, f being the resistance of the train a ton upon a level, if the train comes upon an incline i, without any change taking place in the speed or the conditions of traction, the resistance a ton upon the incline becomes $f + i$, i being the number of millimètres in the tangent of the inclination a mètre.

To eliminate the part played by gravity, and to render comparable trains tried upon different lines, or parts of a line, we have in each case subtracted i from the absolute resistance, so that the last column gives the values of f on a level.

With respect to Tables G to J we have only two special explanations to give;—

1. The weight of the paying load was found by adding to the weight of the luggage obtained from the guard's books, 70 kilogrammes a head for the passengers. This is not too much to include luggage in hand.

2. We have not confined ourselves, as we did in the case of goods trains, to calculating the resistance a ton; but we have calculated the resistance per carriage. It was comparatively easy to accomplish this, because the gross weight of the vehicle varies within much narrower limits in a passenger than in a goods train; in the former, the carriages being all covered, they are completely exposed to the resisting action of the air, and consequently absorb a nearly equal portion of the whole resistance of the train.

Goods Trains.—In reference to the experiments noted in Tables A to E, we have to make the following remarks;—

1. One or two engines were employed upon each train; there were two, three or four axles coupled to each engine, and the adhesive weight varied from 20 to 46 tons.

2. The gross weight of the trains varied from 152 to 571 tons; the number of trucks and vans was from 12 to 56, and of these some were empty, some partially, and others wholly loaded.

3. The proportion of trucks to vans varied from 0 to 97 per cent., and of these from 2 to 100 per cent. were lubricated with oil.

4. The inclination of the line varied between 1 and 20 in 1000; the minimum radius of the curves has been as low as 400 mètres.

5. The temperature was of all degrees − 4 and + 26 centigrade, and the weather was as varied as the temperature.

6. The mean speed fluctuated between 10 and 39 kilomètres an hour.

This for the data; as to the results, the following limits may be given;—

1. The force of traction has varied from 825 to 4690 kilogrammes (omitting the cases of double traction).

2. The absolute resistance a ton has varied from $2^{k}\cdot74$ to $22^{k}\cdot18$, according to the nature of the line.

3. The coefficient of resistance on a level has varied from $2^{k}\cdot21$ to $8^{k}\cdot60$, according to the speed and the state of the atmosphere.

Tables VI. and VII., which are taken from Tables A to E, bring together those trains that have been subject to the same circumstances of traction. Though, in these two Tables, the speed and the nature of the line were precisely the same, it will be seen that, in the second, the coefficients of resistance are greater than those of the former; this difference is due 1, to the smallness of the paying load, and 2, to atmospheric conditions (wind, frost, &c.).

In Table I. we have;—

For a speed of 17 to 26 kilomètres .. .. $f = 3^{k}\cdot15$
„ 26 to 32 „ .. .. $f = 3^{k}\cdot95$

which gives for a train in good condition of loading, mean weight a truck $\geqq$ 8000 kils. and for a mean ordinary speed, $f = 3^{k}\cdot55$ on a level.

TABLE VI.—GOODS TRAINS.

Designation of the Train.	Number of Trucks, &c.	Gross Weight		Temperature.	Proportion of Trucks to Vans.	Proportion of Trucks lubricated with Oil.	Speed an hour.	Resistance a ton, corrected for Gravity.	Observations.
		Total.	a truck.						
		tons.	kilogs.	°	per cent.	per cent.	kiloms.	kils.	
199. June 20, 1862	53	567	10,700	+14	..	..	20	3·12	All these trains have realized the following conditions;—
62. Feb. 27, 1863	28	306	11,000	+13	14	43	25	3·14	
62. April 28, 1864	60	509	8,500	+18	..	..	26	3·20	
66. Aug. 31, 1864	34	332	9,700	+18	25	11	17	3·14	
							Mean	3·15	$i < 3$ mill.
567. June 27, 1862	27	221	8,200	+22	..	..	29	4·43	$R \geqq 1000$ mèt.
562. June 15, 1862	33	301	9,100	+20	..	..	29	4·32	$t > 5°$.
64. March 19, 1863	29	321	11,100	+ 6	50	14	28	4·01	
62. Feb. 27, 1863	28	306	11,100	+13	14	43	31	3·18	The gross weight of the truck > 8000 kilogrammes.
78. March 17, 1864	46	474	10,300	+14	..	..	31	3·98	
88. March 18, 1864	26	249	9,500	+12	45	..	29	4·05	
78. April 12, 1864	28	300	10,700	+12	28	71	32	4·33	
78. April 12, 1864	30	326	10,900	+18	30	71	29	3·54	Wind imperceptible.
78. April 13, 1864	55	536	9,700	+19	36	..	31	4·41	
78. April 13, 1864	55	536	9,700	+19	36	..	31	3·54	
66. Aug. 31, 1864	32	296	9,200	+19	25	11	30	3·74	
							Mean	3·95	
							General mean	3·55	

In Table VII. we find for this same mean ordinary speed;—

Calm weather, frosty, good paying load .. .. .. $f = 5^{k}\cdot09$
„ „ small paying load .. .. .. $f = 6^{k}\cdot26$
Windy, good paying load .. .. $f = 5^{k}\cdot06$
„ small paying load .. .. $f = 5^{k}\cdot87$
Calm weather, small paying load .. .. $f = 4^{k}\cdot87$

The smaller the paying load is, the greater is the number of axles for the same gross tonnage, and it is obvious that this fact must have great influence on the coefficient of traction, even if the line have no curves of a less radius than 1000 mètres

Mixed Trains.—The following remarks apply to Table F;—

1 The number of engines employed on each train was one or two; the number of axles coupled, per engine, two or three; and the adhesive weight, 20 to 27 tons.

2. The gross weight of the trains varied from 120 to 239 tons; the number of carriages and trucks was from 14 to 30.

3. The proportion of open trucks was from 0 to 75 per cent., and of these 15 per cent. at the most were lubricated with oil.

4. The inclination of the line varied between the narrow limits of $0^{mm}\cdot4$ to $3^{mm}\cdot5$; the minimum radius of the curves was 1000 mètres.

5. The mean speed fluctuated between 25 and 52 kilomètres an hour. This latter speed, which is far above the ordinary, was attained only when it became necessary to recover lost time.

TABLE VII.—GOODS TRAINS.

Trains of difficult Traction from various causes.

Designation of the Train.	No. of Trucks &c.	Gross Weight		Atmospheric Conditions.	Proportion of Trucks to Vans.	Proportion of Trucks, &c., lubricated with Oil.	Speed an hour.	Resistance a ton, corrected.	Mean of the Coefficients.	Observations.
		Total.	a truck.							
		tons.	kilogs.	°	per 100.	per 100.	kiloms.	kilogs.	kilogs.	
85. Feb. 22, 1863	37	281	7,600	Foggy calm T= −3	16	..	25	4·76		All the trains of this Table have been subject to the following conditions;—
85. Feb. 22, 1863	37	281	7,600	„ T= −2	16	..	25	5·23	5·09	
88. Feb. 13, 1865	25	216	8,600	Calm T= −2	..	..	31	5·58		
88. Feb. 13, 1865	25	216	8,600	„ T= −2	..	..	33	4·80		
61. Feb. 14, 1865	39	206	5,400	Calm T= −3	65	10	26	6·40		$i < 3$ mill.
75. Feb. 13, 1865	38	175	4,600	„ T= −3	80	25	33	7·27		
85. Feb. 27, 1863	37	249	6,700	„ T= −2	30	3	25	4·88	6·26	$R \overline{>} 1000$ mèt.
85. Feb. 27, 1863	39	267	6,800	„ T= −1	30	3	27	5·37		$V < 35$ kiloms.
91. April 13, 1864	40	338	8,400	Windy T= + 7	..	..	28	4·78		To calculate the means in the last column we have taken only one coefficient a train, unless this train has been subject to very varying conditions of traction, in which case several coefficients have been taken.
91. April 13, 1864	40	338	8,400	„ T= +10	..	..	27	5·14		
91. April 13, 1864	38	323	8,500	„ T= +10	..	..	26	5·92		
91. April 13, 1864	38	323	8,500	„ T= +10	..	..	27	5·40	5·06	
91. April 13, 1864	38	323	8,500	„ T= +12	..	..	28	5·89		
66. April 7, 1864	34	329	9,600	„ T= +12	60	..	24	4·68		
78. March 17, 1864	47	478	10,200	„ T= +14	..	..	29	4·82		
89. April 14, 1864	44	240	5,400	Windy T= + 8	66	9	30	6·03		
89. April 14, 1864	44	240	5,400	„ T= + 8	66	9	27	6·20		
89. April 14, 1864	48	267	5,500	„ T= +10	66	9	20	7·73		
89. April 14, 1864	48	267	5,500	„ T= +10	66	9	27	7·60		
89. April 14, 1864	45	245	5,400	„ T= +10	66	9	26	7·46		
89. April 14, 1864	45	245	5,400	„ T= +12	66	9	28	6·83		
89. April 14, 1864	39	199	5,100	„ T= +18	66	9	31	7·90		
89. March 18, 1864	38	264	6,900	„ T= +11	30	8	28	4·79		
89. March 18, 1864	38	264	6,900	„ T= +11	30	8	18	5·94		
89. March 18, 1864	38	264	6,900	„ T= +11	30	8	26	5·92	5·87	
89. March 18, 1864	37	258	6,900	„ T= +11	30	8	32	6·15		
91. March 17, 1864	26	169	6,500	„ T= + 5	..	..	24	6·93		
91. March 17, 1864	26	169	6,500	„ T= + 5	..	..	25	7·68		
91. March 17, 1864	25	160	6,400	„ T= + 8	..	..	30	7·87		
563. June 14, 1862	34	238	7,000	„ T= +15	..	..	24	4·55		
564. June 24, 1862	30	180	6,000	„ T= +18	..	..	24	5·06		
564. June 24, 1862	41	210	5,100	„ T= +18	..	..	20	5·16		
564. June 24, 1862	41	210	5,100	„ T= +18	..	..	28	6·45		
3/64. June 22, 1864	49	309	6,300	„ T= +18	50	..	24	4·82		
83. April 6, 1864	51	298	5,800	Calm	40	..	31	5·06		
3. April 6, 1864	44	244	5,500	„	40	..	26	4·93		
83. April 6, 1864	41	226	5,500	„	40	..	25	5·24		
77. Dec. 6, 1862	30	189	6,300	„ T= +12	18	..	32	5·20		
77. Dec. 6, 1862	28	172	6,100	„ T= +12	18	..	36	5·70		
562. June 25, 1862	28	196	7,000	„ T= +22	..	..	28	6·00		
81. April 11, 1864	43	254	5,900	„ T= +12	30	5	25	5·43		
81. April 11, 1864	43	254	5,900	„ T= +12	30	5	23	5·53		
81. Sept. 1, 1864	52	318	6,100	„ T= +25	40	7	29	3·74		
81. Sept. 1, 1864	49	299	6,100	„ T= +25	40	7	34	4·34		
75. Aug. 31, 1864	42	307	7,300	„ T= +20	14	7	20	4·19		
75. Aug. 31, 1864	42	307	7,300	„ T= +20	14	7	27	3·83	4·87	
75. Aug. 31, 1864	41	297	7,200	„ T= +20	14	7	14	4·15		
75. Aug. 31, 1864	40	273	6,800	„ T= +20	14	7	30	3·41		
75. Aug. 31, 1864	41	264	6,400	„ T= +20	14	7	21	4·54		
81. June 17, 1864	55	336	6,100	„ T= +21	27	..	17	3·22		
40/69. April 29, 1864	31	184	5,900		..	..	24	4·77		
83. March 16, 1864	29	196	6,700	Calm T= + 6	31	7	22	5·00		
83. March 16, 1864	29	196	6,700	„ T= + 6	31	7	26	5·14		
83. March 16, 1864	37	279	7,500	„ T= + 9	25	5	33	4·12		
85. Nov. 26, 1862	33	207	6,200	„ T= + 5	26	13	30	5·70		
85. Nov. 26, 1862	33	207	6,200	„ T= + 5	26	13	26	6·00		
85. Nov. 26, 1862	33	207	6,200	„ T= + 5	26	13	29	5·89		

Table VIII. gives those trains which were subject to the same circumstances of traction. Under good conditions of line, of load, and of weather, and with a mean speed of 34 to 44 kilomètres, these trains give a mean coefficient, $f = 4^k \cdot 67$, corresponding to the mean coefficient $f = 3^k \cdot 55$, found for goods trains at a mean speed of 20 to 30 kilomètres.

Fine weather, bad paying load .. .. $f = 5^k \cdot 48$
Windy, good paying load .. .. $f = 5^k \cdot 62$

TABLE VIII.—MIXED TRAINS. (Speed between 34 and 44 kilomètres.)

$i <$ 3 millimètres. Radius of the curves $\geqq$ 1000 mètres. $t > 0°$.

Designation of the Train.	Number of Carriages.	Gross Weight		Temperature.	Proportion of Trucks to Vans, &c.	Proportion of Trucks lubricated with Oil.	Speed an hour.	Resistance a ton, corrected.	bservations.
		Total.	a carriage.						
		tons.	kilogs.	°	per 100.		kiloms.	kils.	
100. April 25, 1862	24	239	9950	..	0	..	36	4·64	
100. April 25, 1862	25	227	9080	..	0	..	38	4·60	Gross weight of a truck, &c., >8000 kilogs.
38. Dec. 5, 1862	22	200	9050	..	0	..	37	4·67	
38. Dec. 16, 1862	18	174	9650	+ 1	..	..	39	4·43	
46. Nov. 19, 1862	14	120	8550	+ 5	0	..	44	5·18	
							Mean	4·67	Fine weather.
100. April 16, 1862	28	207	7380	..	..	..	34	5·22	
100. April 16, 1862	25	190	7580	..	..	..	42	5·75	
							Mean	5·48	Light paying load. Fine weather.
100. Nov. 25, 1862	27	212	7850	+ 4	37	11	35	5·45	
100. Nov. 25, 1862	24	197	8200	+ 4	40	15	34	5·12	
100. Nov. 25, 1862	24	197	8200	+ 4	40	15	35	5·54	
46. Nov. 15, 1864	23	217	9450	+ 9	75	..	42	5·98	
46. Nov. 17, 1864	19	172	9050	+11	0	..	36	5·78	
46. Nov. 17, 1864	19	172	9050	+11	0	..	42	5·66	
							Mean	5·62	Windy. Good paying load.

Passenger Trains.—The following refers to Tables G to J;—

1. The number of engines employed was one or two to each train; the number of axles coupled, at the most, two per engine; and the adhesive weight was from 9800 to 22,000 kilogrammes.

2. The gross weight of the trains varied from 30 to 116 tons, and the number of carriages to a train was from five to twenty.

3. All the carriages were covered, the proportion of those lubricated with oil being from 7 to 50 per cent.

4. The inclination of the line varied from 0·75 to 10 millimètres, and the minimum radius of the curves was 700 mètres.

With respect to the results, we may state the following limits;—

1. The force of traction has varied from 505 to 1400 kilogrammes for a single engine.

2. The absolute force per carriage has varied from 32 to 131 kilogrammes, and the absolute force a ton from $5^k \cdot 08$ to $20^k \cdot 39$.

3. The force corrected for gravity has varied;—

A carriage .. .. from 21 to 131 kilogrammes.
A ton .. .. from 3·75 to 20·26 „

Table IX. gives the coefficients for long trains. The number of carriages was from fourteen to seventeen. The following is the value of the mean coefficients;—

For V = 45^k .. .. $f = 5^k \cdot 98$
„ V = 52^k .. .. $f = 6^k \cdot 53$
„ V = 60^k .. .. $f = 8^k \cdot 05$

Table X. is for short trains. The number of carriages was eight to ten. The following is the value of the mean coefficients;—

For V = 46^k .. .. $f = 7^k \cdot 21$
„ V = 58^k .. .. $f = 9^k \cdot 57$
„ V = 76^k .. .. $f = 14^k \cdot 55$

The last coefficient is for an express train, the carriages of which offer a greater surface to the air than those of ordinary trains. This cause combined with the increased speed to augment the coefficient.

TABLE IX.—PASSENGER TRAINS.

$i < 3$ millimètres. $R \overline{\overline{>}} 1000$ mètres. $t > 0°$. $n > 10$. Calm weather.

Designation of the Train.	Number of Carriages.	Gross Weight.	Proportion of Carriages lubricated with Oil.	Temperature.	Speed an hour.	Mean of the Speeds.	Resistance a ton on a Level.	Mean of the Resistances.	Mean Resistance a carriage.	Mean of the Resistances a carriage.
		tons.	per 100.	°	kiloms.	kiloms.	kils.	kils.	kils.	kils.
35. April 27, 1862	14	90	..	+14	47	45	6·24	5·98	40	37
36. May 26, 1862	17	101	..	22	46		5·54		33	
40·26. April 28, 1866	17	101	30	20	44		6·43		38	
44. June 8, 1866	17	107	17	25	45		5·73		36	
35. April 27, 1862	14	90	..	14	54	52	6·95	6·53	44	40
35. May 1, 1862	16	101	..	..	50		6·03		38	
36. May 6, 1862	17	101	..	22	54		6·03		35	
35. May 7, 1862	16	106	..	17	50		6·71		44	
40·23. April 28, 1866	17	101	30	24	52		6·54		38	
35. June 4, 1866	17	105	..	19	54		6·95		43	
36. April 30, 1862	15	91	..	..	58	60	8·03	8·05	49	48
35. Nov. 19, 1864	17	98	..	8	59		7·95		45	
35. June 4, 1866	17	105	..	19	63		8·16		50	

TABLE X.—PASSENGER TRAINS.

$i > 3$ millimètres. $R \overline{\overline{<}} 1000$ mètres. $t > 0°$. $n \overline{\overline{<}} 10$. Calm weather.

Designation of the Train.	Number of Carriages.	Gross Weight.	Proportion of Carriages lubricated with Oil.	Temperature.	Speed an hour.	Mean of the Speeds.	Resistance a ton on a Level.	Mean of the Resistances.	Mean Resistance a carriage.	Mean of the Resistances.
		tons.	per 100.	°	kiloms.	kiloms.	kils.	kils.	kils.	kils.
40·35. April 24, 1866	8	50	25	+17	45	46	7·44	7·21	45	44
40·35. April 26, 1866	9	56	44	20	41		7·27		45	
2·16. June 6, 1866	10	58	30	23	46		7·56		44	
2·16. June 7, 1866	10	62	30	27	51		6·59		41	
40·35. April 24, 1866	8	50	25	17	65	58	9·80	9·57	58	58
40·32. April 25, 1866	9	55	33	15	60		9·80		55	
2·16. June 5, 1866	10	61	10	23	61		9·80		60	
33. March 14, 1866	8	53	..	2	76	76	14·55	14·55	96	96

TABLE XI.—PASSENGER TRAINS.

Trains of difficult Traction from various causes.

Designation of the Train.	Number of Carriages.	Gross Weight.	Atmospheric Circumstances.	Proportion of Carriages lubricated with Oil.	Speed an hour.	Resistance corrected		Observations.
						a ton.	a carriage.	
		tons.		per 100.	kiloms.	kils.	kils.	
31. Dec. 21, 1865	12	65	T = + 5°	..	55	11·80	66	All the trains of this Table have been subject to the following conditions;—
31. Dec. 21, 1865	12	65	T = + 5°	..	48	11·40	66	
32. March 12, 1866	12	79	Dry; a little wind; T = + 8°	33	51	9·55	63	
32. March 15, 1866	12	72	Dry; a little wind; T + = 8°	25	43	11·40	68	
36. Dec. 10, 1862	20	72	Wind and wet; T = + 7°	..	43	9·35	54	$i < 3$ millimètres.
20. Aug. 3, 1866	12	116	A little wind; dry; T = + 24°	42	45	10·19	61	$R \overline{\overline{>}} 100$ mètres.
40·35. April 24, 1866	12	73	Windy and dry; T = + 17°	17	45	12·21	71	$t > 0°$.
				Means	47	10·84	64	$n > 10°$.

Passenger Trains of Difficult Traction.—In Table XI. we have brought together several trains which offered extraordinary difficulties with regard to traction, either on account of the wind, or of very imperfect lubrication of the parts liable to friction. This Table applies to trains having more than ten carriages; it gives the mean coefficient of $10^{k} \cdot 84$ for a mean speed of 47 kilomètres an hour. The three Tables, IX., X., and XI., have been extracted from the general Tables.

Resistance of Trains at Starting.—Hitherto we have been considering the resistance of trains in motion; we have now to consider the resistance offered at starting. In this case, the greatest force exerted by the engine upon the couplings to overcome the inertia of the train corresponds to the greatest ordinate given by the dynamometrical curve. Tables XII. and XIII. contain the results of a large number of experiments made with both passenger and goods trains.

TABLE XII.—RESISTANCE OF PASSENGER TRAINS AT STARTING.

Designation of the	in.	Gross Weight.	Number of Carriages.	Proportion of Carriages lubricated with Oil.	Temperature.	Force necessary to put the Train in motion			Observations.
						Total.	a ton.	a carriage.	
		tons.		per 100.	°	kils.	kils.	kils.	
17.	April 11, 1864	52	10	..	+15	1230	24	123	
34.	April 27, 1864	63	11	..	+13	1150	18	104	
35.	Nov. 17, 1864	82	14	..	+ 8	2000	24	143	
31.	Nov. 21, 1864	85	18	..	+ 8	1920	23	107	
31.	May 4, 1865	70	12	8	+27	1880	26	156	
2·16.	July 20, 1865	78	12	..	+20	1850	24	154	
1·43.	July 19, 1865	64	10	10	+17	1140	18	114	Engines with free wheels.
2·43.	July 19, 1865	83	13	..	+17	1580	19	121	
2·16.	July 21, 1865	97	15	7	+20	1960	20	130	
2·43.	July 21, 1865	77	13	15	+20	1810	24	139	
1·38.	July 21, 1865	40	7	..	..	1160	29	166	Ditto.
31.	Dec. 21, 1865	73	14	..	+ 5	2150	29	153	
32.	March 12, 1866	79	12	33	+ 8	1840	23	153	
33.	March 13, 1866	52	8	..	+ 6	1080	21	135	Ditto.
32.	March 13, 1866	88	14	28	+ 7	1730	20	124	
33.	March 14, 1866	53	8	..	+ 2	1090	21	136	Ditto.
32.	March 14, 1866	78	12	25	+ 6	1280	16	106	
33.	March 15, 1866	52	8	..	+ 2	1350	26	169	Ditto.
32.	March 15, 1866	72	12	25	+ 8	1900	26	158	
40·35.	April 24, 1866	70	12	16	+17	1700	24	141	
40·32.	April 25, 1866	55	9	33	+15	1320	24	147	
40·35.	April 26, 1866	56	9	44	+20	1200	21	133	The mean a ton is = 22; the mean a carriage = 134.
40·34.	April 27, 1866	81	14	20	+26	2100	26	150	
40·23.	April 28, 1866	101	17	30	+24	1800	18	105	
41·26.	April 28, 1866	67	11	..	+20	1320	20	120	
40·26.	April 28, 1866	101	17	30	+20	1650	16	97	
35.	June 4, 1866	105	17	..	+19	1650	16	97	
2·13.	June 5, 1866	49	9	11	+20	1500	30	166	
2·16.	June 5, 1866	61	10	10	+23	1700	28	170	
2·43.	June 6, 1866	68	11	9	+18	1430	21	130	
2·16.	June 6, 1866	58	10	30	+23	1330	23	133	
1·16.	June 7, 1866	53	10	10	+25	1750	33	175	
44.	June 8, 1866	107	17	17	+25	2000	17	117	Engines with free wheels.

Note.—The line is level, or inclined less than 1 millimètre.

It will be seen from Table XIII. that the mean force required was 13 kilogrammes a ton. For very long trains, a force of 8, and in some cases 6, kilogrammes only was sufficient to put the train in motion, a circumstance which is explained by the fact that the carriages of a train start each in succession, and not simultaneously. The mean force requisite for passenger trains was 22 kilogrammes a ton, or about 134 kilogrammes a carriage. It must be remembered that these figures refer only to instances when the start has been gently accomplished; when the train is put in motion in an abrupt manner a considerably greater force is exerted.

Generally, it may be stated that passenger trains require a force nearly twice as great as that necessary for goods trains. The causes of this are the tight coupling of the former, and the necessity of getting the train sooner into rapid motion.

Analysis of the Resistance of Engines.—A series of experiments were undertaken to determine separately the portion of the whole resistance due—

1. To the rolling of engines considered as mere vehicles;
2. To the friction of the side connecting-rods;
3. To the friction of the pistons, connecting-rods, and cross-heads.

TABLE XIII.—RESISTANCE OF GOODS TRAINS AT STARTING.

Designation of the Train	Gross Weight.	No. of Trucks, &c.	Proportion of Trucks lubricated with Oil.	Temperature.	Force required to put the Train in motion		Observations
					Total.	a ton.	
	tons.		per 100.	°	kils.	kils.	
91. March 17, 1864	160	25	..	+ 2	2800	11	
78. March 17, 1864	478	47	..	+14	5220	11	Double traction.
88. March 18, 1864	241	29	..	+12	3270	11	
89. March 18, 1864	264	38	8	+11	3560	13	
83. April 6, 1864	302	51	..	..	4020	13	
81. April 11, 1864	254	43	5	+12	3880	15	
78. April 12, 1864	300	28	3	+12	3740	13	
91. April 13, 1864	338	40	..	+ 7	3550	10	
78. April 13, 1864	534	55	..	+19	6600	12	Double traction.
89. April 14, 1864	267	48	9	+ 8	3720	14	
88. April 14, 1864	322	38	..	+19	4620	14	
40·69. April 28, 1864	278	35	8	+20	3340	12	
66. April 15, 1864	264	29	..	+20	3500	13	
40·62. April 28, 1864	511	60	..	+18	3160	6	Double traction.
40·69. April 29, 1864	184	31	..	..	3090	17	
81. June 17, 1864	336	55	..	+21	4400	13	
1·67. June 20, 1864	334	46	11	..	5550	17	
1·68. June 20, 1864	245	32	8	..	3060	12	
1·68. June 21, 1864	304	33	15	..	3750	12	
1·64. June 22, 1864	298	45	..	..	4800	16	
1·67. July 6, 1864	269	41	12	+16	3040	11	
1·70. July 7, 1864	362	30	13	..	4100	15	
1·68. July 8, 1864	295	29	6	..	4340	14	
1·67. July 26, 1864	170	28	15	..	3020	18	
75. Aug. 31, 1864	297	41	7	+20	2880	10	
66. Aug. 31, 1864	332	34	25	..	3150	10	
81. Sept. 1, 1864	315	52	7	+25	2620	8	Engine, type 20.
75. Feb. 13, 1865	175	38	25	− 3	2390	14	
61. Feb. 14, 1865	206	39	10	− 3	2540	12	
78. Feb. 14, 1865	185	22	10	− 1	3060	16	
2·65. July 20, 1865	255	35	20	+20	3250	13	
2·65. July 21, 1865	259	39	30	+25	3440	13	
74. Jan. 9, 1867	370	41	..	..	4080	11	
1·64. Jan. 14, 1867	204	21	..	..	3620	18	
					Mean ..	13	

Note.—The line is level, or inclined less than 1 millimètre.

To accomplish this, an engine having its steam up and being properly oiled was drawn, *without a tender*, behind the dynamometer car.

The results of these experiments are given in Table XIV.

1. For a mixed engine in full gear, but without tender,

$$V = 28^k \quad .. \quad .. \quad .. \quad .. \quad .. \quad .. \quad .. \quad f = 9^k{\cdot}60$$

For a goods engine in full gear, but without tender,

$$V = 28^k \quad .. \quad .. \quad .. \quad .. \quad .. \quad .. \quad .. \quad f = 12^k{\cdot}20$$

2. It is impossible to draw any conclusion from the reduction of the resistance due to the suppression of the side connecting-rods; and, indeed, we see that the resistance has been greater on several occasions when the side connecting-rods were suppressed than when the engine was in full gear. The difference in these cases must be attributed to the condition of the lubricated parts. But a great influence from the connection of the wheels was not to be expected, seeing that the experiments were made on a straight piece of line, and that the tire was very round.

3. The influence of the pistons, connecting-rods, and cross-heads was, however, clearly shown. For mixed or goods engines, the resistance of these parts is about 48 per cent. of the whole resistance of the engine in full gear.

It must be remembered that these results refer only to engines which are not working. If the engine is at work, its parts are subject to totally different pressures, and the resistance is changed in a like degree. (See Notes D and H.)

From Table XIV. we find the resistance of engines reduced to the condition of mere vehicles by putting out of gear the driving and side connecting-rods. The mean of this resistance is $5^k{\cdot}22$ for mixed engines at a speed of 28 to 35 kilomètres, and $6^k{\cdot}15$ for goods engines at a speed of 24 to 27 kilomètres. For engines with four axles coupled (out of gear), at a speed of 6 to 10 kilomètres, we find $f = 11$ kilogrammes.

In this kind of engine the resistance due to the mechanism is also about half the total resistance. These powerful engines when moving at a low rate of speed offer a resistance much greater

TABLE XIV.—EXPERIMENTS ON THE RESISTANCE OF ENGINES IN MOTION (without Tender).

Kind of Engine.	Number of the Engine.	Weight of the Engine.	Condition of the Mechanism.	Number of Kilomètres experimented over.	Speed an hour.	Mean total Resistance.	Mean Resistance a ton	Fraction by which the Resistance is diminished when the Mechanism is out of gear.	Observations.
		kilogs.			kiloms.	kilogs.	kilogs.	per 100.	
Mixed.—Type 14. Four wheels coupled. D = 1m·68.	247	31,300	Heated, in full gear	6	27	300	9·58	..	
			Connecting-rods out of gear	6	26	135	4·32	55	
		30,700	Side connecting-rods out of gear	8	32	267	8·69	11	
			Connecting and side connecting rods out of gear .	5	28	139	4·52	54	
		31,300	Heated, in full gear	5	44	319	10·19	..	
			Connecting-rods out of gear	7	38	141	4·50	56	
		30,700	Side connecting-rods out of gear	6	44	326	10·61	..	
			Connecting and side connecting rods out of gear .	5	35	159	5·18	50	
	249	31,700	Heated, in full gear	5	30	305	9·63	..	
			Connecting-rods out of gear	5	26	182	5·70	40	
		31,400	Side connecting-rods out of gear	13	30	456	14·60	..	Engine cold, imperfect state of lubrication.
			Connecting and side connecting rods out of gear .	5	28	176	5·60	42	
		31,700	Heated, in full gear	7	45	374	11·80	..	
			Connecting-rods out of gear	5	36	193	6·09	48	
		31,400	Connecting and side connecting rods out of gear .	4	45	207	6·58	44	
	0·123	29,700	Heated, in full gear	12	27	370	12·40	..	
Goods.—Type 15. Six wheels coupled. D = 1m·30.	0·154	30,000	Connecting-rods out of gear	12	27	192	6·46	48	
			Side connecting-rods out of gear	12	26	405	13·60	..	Engine cold, imperfect state of lubrication.
			Connecting and side connecting rods out of gear .	12	27	190	6·35	48	
			Heated, in full gear	12	29	360	12·00	..	
			Connecting-rods out of gear	10	27	200	6·66	44	
			Side connecting-rods out of gear	13	27	324	10·80	10	
			Connecting and side connecting rods out of gear .	10	24	179	5·96	50	

than that of other engines, because there is in their mechanism a larger surface subject to friction, the weight of their parts is greater, and their wheels are smaller.

Causes which may Influence the Coefficients of Resistance in Carriages.—As we did in the case of engines, so in the case of carriages we have endeavoured to discover the various causes which may influence the coefficients of resistance. On a level, and in a straight line, this resistance is composed of two elements;—

1. The friction of the wheels;
2. The resistance due to the atmosphere.

If the rate of speed is very low, the second element disappears.

Neglecting, therefore, the resistance due to the atmosphere, we have considered the influence of lubrication, of the diameter of the journals, and of the extent of the surface subject to friction.

Making R the resistance of a vehicle;
p its weight, minus the wheels;
p' the weight of the wheels;
d the diameter of the journals;
D the diameter of the wheels;
f' the coefficient of rolling at the circumference;
f'' the coefficient of the friction of the journal upon its bearings;

we have

$$R = (p + p')f' + pf'' \times \frac{d}{D}. \qquad [E]$$

Friction in an Oil-box.—In the Table of the mean resistance of the carriage moving at different velocities, we saw that for a covered carriage lubricated with oil, the mean resistance R = 11 kilogrammes ($p + p' = 5500$ kilogrammes), at a speed of 1 to 5 kilomètres.

At this rate of speed, the resistance of the air may be neglected, and we may state

$$11 = 5500 \times 0{\cdot}001 + 3900 \times 0{\cdot}075 f''. \qquad [E]$$

(In the rolling stock of the Eastern Company, upon whose line the experiments were made, D = 1 mètre, $d = 0^{m}{\cdot}075$, and f' is admitted to be = 0·001.)

From [E] we deduce $f'' = 0{\cdot}018$.

This is the coefficient of friction in an oil-box, where the lubrication is continuous, at a low rate of speed.

Friction in a Grease-box.—From the special experiments made in 1862, the mean of the ratios between the traction of a carriage lubricated with oil and that of a carriage lubricated with grease was found to be 1·35.

Equation [E] therefore becomes $11 \times 1{\cdot}35 = 5500 \times 0{\cdot}001 + 3900 \times 0{\cdot}075 f''$; when we deduce $f'' = 0{\cdot}032$.

Friction for a Whole Train.—Taking, in our experiments, trains made up chiefly of carriages lubricated with oil, and moving at a rate of speed not exceeding 20 kilomètres, the results obtained were the following;—

($f' = 0{\cdot}001$.)

Experiment No. 189,	$f = 2^{k}{\cdot}7$,	whence	$f'' = 0{\cdot}026$
„ 188,	$f = 2^{k}{\cdot}4$,	„	$f'' = 0{\cdot}021$
„ 166,	$f = 2^{k}{\cdot}7$,	„	$f'' = 0{\cdot}026$
„ 167,	$f = 2^{k}{\cdot}6$,	„	$f'' = 0{\cdot}025$
„ 169,	$f = 2^{k}{\cdot}3$,	„	$f'' = 0{\cdot}020$
„ 172,	$f = 2^{k}{\cdot}2$,	„	$f'' = 0{\cdot}019$

For a train having only 10 per cent. of carriages lubricated with oil, we have

Experiment No. 99, $f = 3^{k}{\cdot}1$, whence $f'' = 0\ 034$.

f'', the friction of the journals, is calculated by means of equation [E], in which $R = f \times G$; G being the gross weight of a carriage expressed in tons.

Influence of the Load upon the Friction of the Journals.—The mean gross weight of the carriages on which the experiments were made differed widely, yet the coefficients f'' remained nearly the same, from which we conclude that the friction of the journals is independent of the load, so long as the wheels turn freely, and the influence of curves and of the atmosphere is absent.

Friction in the Boxes of a Tender.—For a tender weighing 19,000 kilogrammes, moving at a speed of 25 to 30 kilomètres, it was found that $f'' = 0{\cdot}043$. (Grease-boxes.)

Friction in the Boxes of an Engine.—For an engine of the types 14 and 15, weighing 30,000 kilogrammes, at a speed of 25 to 30 kilomètres, $f'' = 0\ 052$. (Lubricated with oil, and the mechanism out of gear.)

Pressure a Square Centimètre of Surface subject to Friction.—Calculating the pressure from the foregoing figures, we find

For carriages loaded with 10 tons	$17^{k}{\cdot}90$
„ engines	$13^{k}{\cdot}20$
„ a carriage loaded with 5 tons	$11^{k}{\cdot}90$

Influence of the Extent of Surface on the Friction of the Journals.—For carriages, the mean surface subject to friction is, per journal, 188 square centimètres: for engines (types 14 and 15) it is 452 centimètres, there is, therefore, in this respect, a great difference between carriages and engines.

Now, for carriages, we found	$f'' = 0{\cdot}018$
And for engines	$f'' = 0{\cdot}053$

The ratio of these coefficients gives $\frac{18}{53} = 0{\cdot}33$. The same value is obtained by raising the ratio of the surfaces to the power $\frac{4}{3}$. There is, therefore, an advantage, from the point of view of traction, in reducing to its minimum the surface subject to friction; taking care, of course, that the journals have sufficient dimensions to prevent their breaking, and to allow the wheels to turn freely.

This double consideration, the reduction of the dimensions and the resistance of the journals, has led to the construction of cast-steel axles. The results have, however, not been satisfactory; cast steel is brittle; Bessemer steel which is softer than cast steel, and of greater resisting power than iron, would no doubt offer greater advantages.

Friction on the Journals of Carriages at Starting.—We have already seen that the resistance of a carriage lubricated with oil, is at starting 48 kilogrammes ($8^k{\cdot}70$ a ton). The equation thus gives $f'' = 0{\cdot}145$ for the friction of the journals at starting. Experiments have shown us (Table XIII.) that this coefficient is nearly the same when the lubrication is effected by means of grease. Until the train has moved a distance of some 50 mètres, the advantage of oil is not apparent, especially if the temperature is much above 0°. This is no doubt owing to the fluidity of the oil which in some degree runs from the surfaces subject to friction while the train is stationary.

TABLE XV.—FRICTION ON THE JOURNALS OF CARRIAGES.

$R \leqslant 1000$ mètres. $T > 10°$; no wind.

Number of the Experiment.	Proportion of Carriages lubricated with Oil.	Speed an hour.	Coefficient of the total Friction.	Coefficient of the Friction on the Journals.	Gross Weight a carriage.
	per 100.	kiloms.			kilogs.
No. 3, Table A	..	19	0·0031	0·035	8,250
„ 10 „ A	..	20	0·0031	0·032	10,700
„ 40 „ B	..	25	0·0031	0·033	10,900
„ 42 „ B	..	31	0·0029	0·030	10,730
„ 59 „ B	..	33	0·0034	0·038	10,300
„ 99 „ C	..	22	0·0031	0·034	9,420
„ 100 „ C	8	23	0·0030	0·033	7,950
„ 102 „ C	..	26	0·0032	0·036	8,480
„ 103 „ C	..	17	0·0028	0·033	5,940
„ 105 „ C	..	17	0·0032	0·039	6,120
„ 106 „ C	..	10	0·0029	0·035	6,030
„ 115 „ D	..	19	0·0031	0·036	6,280
„ 139 „ D	..	15	0·0033	0·038	7,900
„ 150 „ D	11	17	0·0031	0·033	9,750
„ 152 „ D	11	19	0·0026	0·026	9,420
„ 154 „ E	7	15	0·0031	0·037	6,300
„ 156 „ E	7	16	0·0031	0·038	5,920
„ 163 „ E	20	15	0·0031	0·036	7,250
	Means ..	20	0·0031	0·035	..

Influence of the Temperature on the Resistance.—In the case of trains lubricated with oil, the influence of the temperature is not appreciable. The advantage possessed by oil over grease, to which we have already called attention, is for a moderate temperature; in winter this advantage is greater. The addition of a small quantity of petroleum to the ordinary oil prevents congealation in the lowest temperature to which our climate is liable.

Table XVI. shows the influence of temperature on the resistance of trains lubricated with grease; it divides into two series, trains having only 10 per cent. of oil-boxes and offering the same circumstances of line, load and speed, in calm weather.

1st series. Temperature from 0° to 3° .. .. .. $f = 5{\cdot}22$
2nd series. „ 15° to 20° .. .. .. $f = 3{\cdot}47$

For low temperatures the increase is 50 per cent.

Influence of Inclines on the Resistance.—The equation [E] supposes the line to be straight and level; for an incline, making an angle α with the horizon, it becomes

2610.

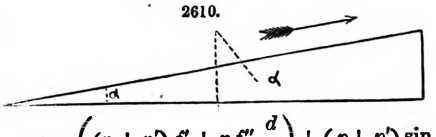

$$R = \cos.\alpha\left((p+p')f' + pf''\frac{d}{D}\right) + (p+p')\sin.\alpha.$$

Within the limits of inclines existing on railways, cos. α differs but little from unity, and sin. α may be replaced by tan. α, Fig. 2610. Putting i for the value of tan. α, in millimètres, we have as the resistance of a carriage moving in a straight line and on an incline,

$$R = (p+p')f' + pf''\frac{d}{D} + (p+p')i, \qquad [F]$$

or $$R = (p+p')f + (p+p')i.$$

TABLE XVI.—INFLUENCE OF FROST.

Wind, hardly perceptible. Speed, 25 kilomètres an hour.

Number of the Experiment.	Proportion of Carriages lubricated with Oil.	Temperature.	Least Radius of the Curves.	Gross Weight a carriage.	Speed an hour.	Coefficient of Traction.	Observations.
	per 100.	°	mètres.	kilogs.	kiloms.	kilogs.	
36	3	− 2	1500	6730	25	4·88	It will be seen that these two series of trains have, with the exception of temperature, been subject to similar conditions.
37	3	− 1	1000	6850	27	5·37	
43	about 10	− 3	straight	7600	26	4·69	
44	„ 10	− 3	1500	7600	25	4·76	
45	„ 10	− 2	1000	7600	25	5·23	
160	„ 10	− 3	straight	5280	26	6·40	
			Means ..	6940	26	5·22	
190	8	+ 20	1200	7950	23	3·04	
115	about 10	at least 15	at least 1000	6280	19	3·12	
140	„ 10	+ 15	straight	7920	23	3·76	
144	7	+ 20	2000	7280	27	3·83	
114	about 10	at least 15	at least 1000	6350	26	3·70	
146	7	+ 20	1000	6820	30	3·41	
			Means ..	7100	25	3·47	

Former experiments showed R to be considerably less than the value given by the equation [F]. The results of our labours enable us to assert that this equation is rigorously exact.

Table XVII., which is made up of trains subject to the same conditions of loading, lubrication, curves, and atmosphere, places the matter beyond a doubt.

Table XVII.—1st series. Mean inclination, $1^{mm}\cdot46$; we have $f = 3\cdot18$
2nd „ „ $4^{mm}\cdot44$ „ $f = 2\cdot97$
3rd „ „ $9^{mm}\cdot50$ „ $f = 3\cdot25$

The value of f was calculated by the equations [F], R being given by experiment. It will be seen that the coefficient of resistance does not decrease when the inclination increases.

4th series. Mean inclination, $5^{mm}\cdot18$; we have $f = 3\cdot39$
5th „ „ $9^{mm}\cdot25$ „ $f = 3\cdot96$

We find rather an increase for the greater incline.

6th series. Mean inclination, $16^{mm}\cdot79$; we have $f = 2\cdot56$
7th „ „ $2^{mm}\cdot05$ „ $f = 3\cdot40$

But here we must remark that the trains of the 7th series were furnished with fewer oil-boxes, that they were twice the length, and moved at twice the speed of those of the 6th series.

We may therefore conclude that, upon an incline, the coefficient of resistance a ton is found by adding to the coefficient on a level, obtained under the same circumstances, as many kilogrammes as there are thousandths in the inclination.

This law is rigorously true, and if the conclusions of some who have considered the subject have been opposed to it, it is probably because they have not made their experiments under identical circumstances of speed and length of train.

Influence of the Length of a Train on the Resistance.—In passenger trains moving at rates of speed greater than 40 kilomètres an hour, the resistance of the air forms an important part of the whole resistance. The action of the air is greater upon the first carriage than upon the others, whence it follows that the resistance per carriage decreases as the length of the train increases. This fact is verified in Tables IX. and X. When the radii of the curves are much below 1000 mètres, this law will not hold good, because the influence of the air will be destroyed by that of the curve.

The length of goods trains may vary within much wider limits than those imposed on passenger trains. In a straight line, or on a curve of a very long radius, the length has no appreciable influence. And, as a fact, it was found that the coefficients for trains of 50 or 60 trucks were very small. But if the radius of the curve is less than 1000 mètres, an increase of length causes an increase of resistance. It must be remembered that in this case the resistance of the air is not the only retarding force to be considered. There is an additional friction on the tire, caused by the direction of the force of traction not coinciding with the axis of the carriages.

Influence of Curves on the Resistance.—The gauge, or normal breadth of the line on the *Chemin de fer de l'Est* is fixed at $1^{m}\cdot447$ of clear space between the rails. This allows a carriage-axle to run upon a curve having a radius of 444 mètres, without sliding or friction of the flanges. In the case of passenger trains composed of 10 to 20 carriages and moving at a rate of speed of 35 to 50 kilomètres an hour, we were unable to discover the smallest influence. It is true that the shortest radii of the curves on which our experiments were made were of 800 mètres. At a rate of speed exceeding 50 kilomètres, the influence of the curve became apparent. In train 31, Table H, experiments 60 and 61, this influence was 5 per 100.

TABLE XVII.—INFLUENCE OF INCLINES ON THE COEFFICIENT OF RESISTANCE.

Speed, 15 to 25 kilomètres an hour. Wind, hardly perceptible.

Number of the Experiment.	Inclination of the Line.	Radius of the Curves.	Speed an hour.	Number of Carriages.	Proportion of Carriages lubricated with Oil.	Absolute Force a ton.	Force a ton, corrected.	Observations.
	millimètres.	mètres.	kiloms.		per 100.	kilogs.	kilogs.	
105	0·43	1000	17	55	..	3·65	3·22	First series.
150	2·50	1000	17	34	11	5·64	3·14	First series.
Mean ..	1·46	1000	17	44	..	4·64	3·18	
154	3·50	1000	15	51	7	6·65	3·15	Second series.
152	3·50	1000	19	32	11	6·15	2·65	Second series.
3	6·00	1000	19	26	..	9·10	3·10	Second series.
103	5·70	1000	17	31	..	8·55	2·85	Second series.
106	3·50	1000	10	54	..	6·45	2·95	Second series.
115	4·50	1000	19	49	..	7·82	3·12	Second series.
Mean ..	4·44	1000	16	41	..	7·47	2·97	
139	9·00	1000	15	40	..	12·35	3·35	Third series.
163	10·00	1000	15	35	20	13·15	3·15	Third series.
Mean ..	9·50	1000	15	38	..	17·75	3·25	
111	5·70	700 to 800	20	36	8	9·87	4·17	Fourth series.
113	5·66	700 to 800	17	32	8	10·13	4·47	Fourth series.
134	5·70	700 to 800	15	35	6	9·44	3·74	Fourth series.
138	5·66	700 to 800	20	31	..	9·00	3·34	Fourth series.
165	4·42	700 to 800	17	38	76	7·65	2·23	Fourth series.
167	5·00	700 to 800	13	38	70	7·56	2·56	Fourth series.
168	4·84	700 to 800	19	35	50	7·85	3·01	Fourth series.
176	4·80	700 to 800	17	44	36	7·55	2·75	Fourth series.
181	5·00	700 to 800	16	40	30	8·56	3·56	Fourth series.
177	5·00	700 to 800	16	44	36	8·05	3·05	Fourth series.
Mean ..	5·18	7 to 800	17	37	..	8·57	3·39	
107	9·25	700 to 800	20	46	11	13·45	4·20	Fifth series.
137	9·25	700 to 800	15	28	18	13·72	4·47	Fifth series.
184–185	9·25	700 to 800	16	33	42	12·47	3·22	Fifth series.
Mean ..	9·25	7 to 800	17	36	..	13·21	3·96	
186	15·00	400 to 600	16	12	66	17·60	2·60	Sixth series.
187	16·89	400 to 600	12	12	66	19·42	2·53	Sixth series.
188	19·80	400 to 600	10	12	66	22·18	2·38	Sixth series.
189	15·50	400 to 600	17	16	100	18·24	2·74	Sixth series.
Mean ..	16·79	4 to 600	14	13	74	19·35	2·56	
123	2·40	400 to 600	25	30	13	5·58	3·18	Seventh series.
124	1·40	400 to 600	29	30	13	5·23	3·83	Seventh series.
125	3·50	400 to 600	21	30	13	7·10	3·60	Seventh series.
126	0·90	400 to 600	21	30	13	3·90	3·00	Seventh series.
Mean ..	2·05	4 to 600	26	30	13	5·45	3·40	

Table XVIII. shows the influence of curves upon goods trains. The mean speed (20 to 30 kilomètres) and the mean number of vehicles (26 to 56) were about the same for the different trains. The following are the results;—

1. When the length of the curves met with in a given distance is less than 20 per 100 $f = 4^k \cdot 43$
2. When the length of the curves in the given distance is between 20 and 50 per 100 $f = 4^k \cdot 76$
3. When the length of the curves is greater than 50 per 100 .. .. $f = 5^k \cdot 12$

We have considered the line as straight when the radius of the curve has been greater than 2000 mètres. The radii of the other curves were between 1000 and 2000 mètres. It is shown, therefore, that curves of a long radius exert a sensible influence upon goods trains.

Our experiments have shown us that if we denote the coefficient of resistance a ton in a straight line by f,

The coefficient on a curve of 1000 mètres will be .. .. .. $f + 1$
And „ „ 800 „ .. .. .. $f + 1{\cdot}50$

Influence of the Condition of the Permanent Way upon the Resistance.—The rails upon which the greater part of our experiments were made are 6 mètres in length, and the joints are covered with plates. When the condition of the permanent way is not good, when, for example, it is near the time for repairs, the train is subject to more or less violent shocks according to the rate of speed. A case of this kind occurred to the express trains No. 33 of the 13th to the 16th March, 1865, Paris to Strasbourg. The way was in a bad state from the kilomètre-post 96 to post 115. Comparing the force and the speed on this section of the line with the force and speed in an adjoining section which was in a good condition, offering the same circumstance of curve, *viz.* from post 74 to post 84, we find for the way in a bad condition;—

1.	Train 33, March 13, for	$V = 67^k$	$f = 112^k$	
2.	„ „ 14, for	$V = 59^k$	$f = 100^k$	
3.	„ „ 15, for	$V = 67^k$	$f = 125^k$	
	Mean	$V = 64^k$	and $f = 112^k$	a carriage.

And for the way in a good condition;—

1.	Train 33, March 13, for	$V = 72^k$	$f = 115^k$	
2.	„ „ 14, for	$V = 75^k$	$f = 95^k$	
3.	„ „ 15, for	$V = 77^k$	$f = 132^k$	
	Mean	$V = 75^k$	and $f = 114^k$	a carriage.

Thus, it may be stated that, on account of the bad condition of the permanent way, the speed was reduced from 75 to 64 kilomètres without any reduction of force. The increased resistance was due to shocks and a certain amount of friction on the flanges.

Influence of the Coupling on the Resistance.—The force required to start a train and the resistance on curves of small radii are influenced by the degree of tension given to the couplings. In goods trains, the couplings being usually loose, the trucks are put in motion one after another, and consequently the whole train is started with a smaller expenditure of force than in the case in which the engine has to overcome the inertia of the whole train at once. In passenger trains the couplings are made very tight to prevent oscillation when in rapid motion, and our experiments in these cases have shown that a considerably greater force was required at starting than in the preceding case. Figs. 2600, 2601, give two dynamometrical curves from which the difference of force required to start a train, caused by the mode of coupling, may be clearly seen;—

1. For the goods train .. .. 75, February 13, 1865:
2. For the passenger train .. .. .. (2) 16, June 5, 1866.

Influence of the Speed; Resistance of the Air.—The greater the speed, the greater is the resistance of the air. The oscillation of the carriages, also, increases with the speed, especially upon curves, and the friction of the tire becomes in a proportionate degree greater. Consequently, the resistance of trains generally must depend in a great measure upon the speed.

1. *Passenger Trains.*—Our experiments upon short passenger trains give

For	$V = 39^k$	$f = 6^k{\cdot}54$, or about	40^k	a carriage.
„	$V = 46^k$	$f = 7^k{\cdot}21$, „	44^k	„
„	$V = 58^k$	$f = 9^k{\cdot}57$, „	58^k	„
„	$V = 76^k$	$f = 14^k{\cdot}55$, „	96^k	„

Fig. 2601 gives the curve representing the law of the resistance according to the velocity. The same figure gives the curve of the resistance for trains composed of more than 10 carriages. It will be seen that the law of increase of the ordinates in function of the abscissæ, which represent the velocities, is less rapid. We will give four points of this curve;—

For	$V = 35^k$	$f = 5^k{\cdot}67$, or about	35^k	a carriage.
„	$V = 45^k$	$f = 5^k{\cdot}98$, „	37^k	„
„	$V = 52^k$	$f = 6^k{\cdot}53$, „	40^k	„
„	$V = 60^k$	$f = 8^k{\cdot}05$, „	48^k	„

2. *Goods Trains.*—The nature and length of goods trains being very variable, it is much more difficult to ascertain the influence of the speed. By referring to Table XVIII. it will be seen that the resistance increases by about 1 or 2 per 100 for an increase of speed of 1 kilomètre within the limits of 20 to 30 kilomètres an hour. (See Note G.)

3. *Mixed Trains.*—We find

For	$V = 40^k$	$f = 4^k{\cdot}67$
„	$V = 50^k$	$f = 5^k{\cdot}60$

These coefficients are considerably smaller than those for passenger trains. This is because the paying load is much greater in mixed trains, and because the resistance of the air has much less influence on the coefficient of resistance a ton gross weight.

Influence of the External or Atmospheric Wind.—Besides the resistance of the air, we have that due to the atmospheric wind.

Train No. 9, August 13, 1860 (from Paris to Château-Thierry, Figs. 2611, 2612), and train 20, of the same day (from Château-Thierry to Paris), composed of the same carriages, and moving in the same atmospheric circumstances between 10 o'clock in the morning and 5 o'clock in the afternoon, were both experimented on by means of the dynamometer car.

The direction from Paris to Château-Thierry is shown below, opposite the direction of the wind observed during the journey. The line winds a little, but if we consider the whole of the journey, it will be seen that the train had, on going, the wind nearly behind, and, on returning, the wind was of course a head-wind

2611.

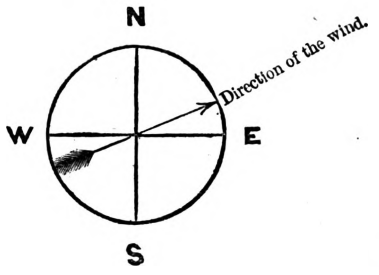

2612.

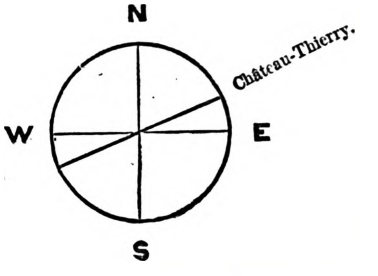

The absolute velocity of the wind was determined by two observations made, by the compass and vane, within a few minutes of each other. The first was made in the station at Château-Thierry, a little before the departure of train 20; the second during the journey on a long piece of straight line within a kilomètre of Château-Thierry. It may be assumed that, during the interval, the direction and the absolute velocity had not changed.

Thus we knew;—

1. The angle made by the actual direction of the wind with the direction of the train when stationary, equal to 40°.

2. The angle made by the relative direction of the wind with the direction of the train when in motion, equal to 15°.

3. The speed of the train, that is, of the artificial wind created by the motion of the train.

Under these conditions, on account of the swiftness of transport, the vane serves as an anemometer. We may thus construct the parallelogram of the velocities, and deduce the value of the actual velocity of the wind.

The absolute velocity of the wind was, by this means, found to be $8^{m} \cdot 40$ a second.

TABLE XVIII.—INFLUENCE OF CURVES UPON TRACTION.

Designation of the Train.	Designation of the Sections of Line.	Speed an hour.	Number of Carriages, &c.	Coefficient of Traction.	Observations.
	kilomètre-post.	kilomètres.		kilogrammes.	
64. March 19, 1863..	140 to 129	27	29	4·28	The distance travelled on a curve is less than 20 per 100 of the total distance.
85. Feb. 27, 1863..	148 „ 166	25	37	4·88	
85. Feb. 27, 1863..	191 „ 198	28	41	5·33	
62. Feb. 27, 1863..	169½ „ 165	26	30	3·65	
62. Feb. 27, 1863..	153 „ 149	28	30	2·63	
85. Feb. 22, 1863..	150 „ 161½	26	37	4·78	
85. Feb. 22, 1863..	189 „ 198½	25	37	4·88	
78. March 17, 1864..	203½ „ 199	29	47	4·82	
78. March 17, 1864..	199 „ 190½	29	47	4·68	
80. March 19, 1864..	139 „ 135	25	30	4·27	
89. March 18, 1864..	148 „ 154	29	38	4·78	
89. March 18, 1864..	154 „ 161	27	38	4·85	
88. March 18, 1864..	204 „ 199	26	26	4·84	
83. April 6, 1864..	57 „ 62	26	44	4·93	
81. April 11, 1864..	120 „ 134	26	43	5·68	
78. April 13, 1864..	197 „ 193	23	55	4·15	
88. April 14, 1864..	203 „ 199	26	35	4·27	
88. April 14, 1864..	199 „ 191	26	35	4·43	
88. April 14, 1864..	169 „ 157	26	38	4·63	
40·69. April 29, 1864..	28½ „ 31	25	31	4·21	
75. Aug. 31, 1864..	9½ „ 14	22	42	3·73	
75. Aug. 31, 1864..	23½ „ 26½	27	42	3·83	
66. Aug. 31, 1864..	41½ „ 39	28	31	3·67	
66. Aug. 31, 1864..	25½ „ 23½	29	38	4·12	
	Means ..	26	37	4·43	

TABLE XVIII.—INFLUENCE OF CURVES UPON TRACTION—*continued.*

Designation of the Train.	Designation of the Sections of Line.	Speed an hour.	Number of Carriages, &c.	Coefficient of Traction.	Observations.
	kilomètre-post.	kilomètres.		kilogrammes.	
85. Nov. 26, 1862..	70 to 78	30	33	6·04	The distance travelled on a curve is between 20 and 50 per 100 of the total distance.
85. Nov. 26, 1862..	86 „ 91	28	33	5·73	
77. Dec. 6, 1862..	67 „ 78	26	28	5·84	
77. Dec. 6, 1862..	89 „ 94	29	28	5·46	
64. March 19, 1863..	124 „ 118	28	29	3·98	
64. March 19, 1863..	113 „ 109	27	29	4·18	
85. Feb. 17, 1863..	176 „ 180	25	39	5·56	
85. Feb. 17, 1863..	180 „ 187	27	39	5·41	
62. Feb. 27, 1863..	185 „ 177	25	28	3·14	
62. Feb. 27, 1863..	164 „ 159	29	30	3·35	
85. Feb. 27, 1863..	163 „ 170	25	37	4·87	
85. Feb. 27, 1863..	176 „ 184½	24	37	5·23	
83. March 16, 1864..	66½ „ 72	22	29	5·95	
83. March 16, 1864..	72 „ 78	24	29	5·00	
80. March 19, 1864..	122 „ 117	29	30	4·23	
80. March 19, 1864..	115 „ 110	27	30	4·55	
81. April 11, 1864..	86 „ 91	28	43	5·37	
81. April 11, 1864..	110 „ 115½	26	43	5·21	
66. April 7, 1864..	73 „ 67	25	34	4·46	
66. April 7, 1864..	61 „ 65	25	34	4·65	
88. April 14, 1864..	182 „ 176	25	35	4·48	
75. Aug. 31, 1864..	57 „ 61	21	41	4·54	
66. Aug. 31, 1864..	62 „ 56½	25	34	4·03	
81. Sept. 1, 1864..	57 „ 60	28	43	4·03	
	Means ..	25	34	4·76	
85. Nov. 26, 1862..	67 to 70	26	33	6·12	The distance travelled on a curve is more than 50 per 100 of the total distance.
85. Nov. 26, 1862..	80 „ 83	30	33	6·02	
85. Nov. 26, 1862..	103 „ 113	28	33	5·60	
77. Dec. 6, 1862..	103 „ 109	24	28	5·80	
64. March 19, 1863..	104 „ 95	30	29	5·59	
63. March 16, 1864..	79 „ 83	26	29	5·20	
89. March 18, 1864..	176½ „ 182½	20	38	5·72	
83. April 6, 1864..	69 „ 76	25	41	5·30	
81. April 11, 1864..	67 „ 71	21	43	5·63	
81. April 11, 1864..	95 „ 103	20	43	5·83	
78. April 12, 1864..	109 „ 104	29	30	3·23	
78. April 13, 1864..	181 „ 177	24	56	4·00	
85. Nov. 26, 1862..	99 „ 102	27	33	5·75	
77. Dec. 6, 1862..	100 „ 103	23	38	5·64	
80. March 19, 1864..	81 „ 78	24	27	4·54	
83. March 16, 1864..	78 „ 82	26	29	5·18	
83. April 6, 1864..	79 „ 82	25	41	5·22	
81. April 11, 1864..	79 „ 82	25	43	5·68	
66. April 7, 1864..	81 „ 78	22	34	4·95	
78. April 12, 1864..	102 „ 99	27	30	3·58	
	Means ..	24	35	5·12	

The resistance observed on the outward and homeward journey, on the same portion of the line and at about the same rate of speed, was, for the same number (thirteen) of carriages,

Between posts	93 and 97	720 and 822	kilogrammes.
„	76 „ 82	700 „ 857	„
„	69 „ 66	600 „ 806	„
„	59 „ 64	552 „ 835	„
„	26 „ 20	643 „ 817	„
	Mean ..	643 „ 827	„

We thus find a difference of 184 kilogrammes (about 30 per 100 of the resistance of the train on the outward journey) due to the influence of the wind having a velocity of $8^{m}\cdot40$ a second.

These results show that the influence of the wind is considerable, and that the resistance of passenger trains must be very variable, if the weather be not absolutely calm. This fact is corroborated by Tables G to J.

We find as the maximum effect of the wind;—

Passenger Trains.

Experiment No. 83. Speed 46 kilomètres .. .. .. $f = 12^k \cdot 63$
„ No. 24. Speed 45 „ .. .. .. $f = 10^k \cdot 06$

Goods Trains.

Experiment No. 54. Speed 25 kilomètres .. .. .. $f = 7^k \cdot 68$
„ No. 92. Speed 21 „ .. .. .. $f = 8^k \cdot 60$

These four experiments were made in a high wind, though not sufficiently violent to be called a storm. It follows from this that, in the absence of extraordinary atmospheric circumstances, the resistance of trains may vary from the single to the double.

Practical Results and Calculations for Determining the Different Terms entering into the Formula of the Power of an Engine.—Formulæ for the Resistance of Trains.—The numerous experiments made by us lead to formulæ giving the resistance r a ton. W. Harding's formula for the resistance r of trains on a level and in a straight line is;—

$$r = 2 \cdot 72 + 0 \cdot 094\,V + \frac{0 \cdot 00484 \times S\,V^2}{P}; \qquad [\delta]$$

r being the resistance of the train a ton in kilogrammes;
V the speed an hour in kilomètres;
S the section of the front of the train (S = 5 square mètres); and
P the weight of the train in tons.

The results given by this formula are much too great. Its application will be found in Table XIX., where the difference in the values obtained for r will be seen to be considerable. We have preferred to modify the coefficients in this formula without changing its form, which seems to us a very convenient one.

The results of our experiments have led us to the following conclusions;—

1st. That we cannot have a simple formula applicable to any train;

2nd. That the trains must be arranged in two groups, the first comprising goods trains moving at from 12 to 32 kilomètres an hour; the second, all trains moving at a rate of speed greater than 32 kilomètres.

TABLE XIX.—APPLICATION OF HARDING'S FORMULA, $R = 2 \cdot 72 + 0 \cdot 094\,V + \frac{0 \cdot 00484 \times S \times V^2}{P}$.

Goods and Mixed Trains.

Designation of the Train.	Speed an hour.	Gross Weight in tons.	Value of the Second Term.	Value of the Third Term.	Total Value calculated for R.	Value found by Experiment.	Excess of the Value found by Calculation.	Observations.
	kiloms.				kils.			
199. June 20, 1862	20	567	1·88	0·02	4·62	3·12	1·50	S is the section of the front of the train. S = 5 sq. mètres.
62. Feb. 27, 1863	25	306	2·35	0·05	5·12	3·14	1·98	
40·62. April 28, 1864	26	509	2·45	0·03	5·20	3·20	2·00	
66. Aug. 31, 1864	17	332	1·60	0·02	5·34	3·14	1·20	
567. June 27, 1862	29	221	2·73	0·09	5·54	4·43	1·11	
562. June 15, 1862	29	301	2·73	0·07	5·52	4·32	1·20	
64. March 19, 1863	28	321	2·63	0·06	5·41	4·01	1·40	
62. Feb. 27, 1863	31	396	2·92	0·07	5·71	3·18	2·53	
78. March 17, 1863	31	474	2·92	0·04	5·68	3·98	1·70	
88. March 18, 1864	29	249	2·73	0·08	5·53	4·05	1·48	
78. April 12, 1864	32	300	3·02	0·08	5·80	4·33	1·47	
78. April 12, 1864	29	326	2·73	0·06	5·51	3·54	1·97	
78. April 13, 1864	31	536	2·92	0·04	5·70	4·41	1·29	
78. April 13, 1864	31	536	2·92	0·04	5·68	3·54	2·14	
66. Aug. 31, 1864	30	296	2·83	0·07	5·62	3·71	1·91	
100. April 25, 1862	36	239	3·38	0·13	6·23	4·64	1·59	
100. April 25, 1862	38	227	3·58	0·15	6·45	4·60	1·85	
38. Dec. 5, 1862	37	200	3·48	0·16	6·36	4·67	1·69	
38. Dec. 16, 1862	39	174	3·67	0·21	6·60	4·43	2·17	
46. Nov. 19, 1864	44	120	4·14	0·39	7·25	5·18	2·07	
100. April 16, 1862	34	207	3·20	0·13	6·05	5·22	0·83	
100. April 16, 1862	42	190	3·95	0·10	6·77	5·75	1·02	

1st Group.—Goods Trains moving at from 12 to 32 kilomètres an hour upon a level, the curves being of a long radius, and the weather fine.—When the rate of speed is low, the term in V^2 of the equation [δ] has so little importance that it may be suppressed. The nature of the lubricating substance has a notable influence, occasioning a considerable change in the coefficients. The two

following formulæ are the result of the tentative processes to which we were obliged to have recourse;—

For trains lubricated with oil,

$$r = 1{\cdot}65 + 0{\cdot}05\,V. \qquad [a]$$

For trains lubricated with grease,

$$r = 2{\cdot}30 + 0{\cdot}05\,V. \qquad [b]$$

These formulæ show the advantage possessed by oil over grease at a temperature of 15°. Below this temperature, the advantage increases rapidly; above, on the contrary, it becomes less. Table XX. gives the results of these formulæ applied to our experiments; it will be seen that they differ but little from those obtained by actual trial.

TABLE XX.—APPLICATION OF A NEW FORMULA TO THE CALCULATION OF THE RESISTANCE OF GOODS TRAINS, $R = 2{\cdot}30 + 0{\cdot}05\,V$.

Designation of the Train.	Speed an hour.	Value of the Term in V.	Value of R by Calculation.	Value of R by Experiment.	Excess of the Value by Calculation
	kilomètres.		kilogrammes.	kilogrammes.	
199. June 20, 1862	20	1·00	3·30	3·12	0·18
62. Feb. 27, 1863	25	1·25	3·55	3·14	0·41
40·62. April 28, 1864	26	1·30	3·60	3·20	0·40
66. Aug. 31, 1864	17	0·85	3·15	3·14	0·01
567. June 27, 1862	29	1·45	3·75	4·43	0·68
562. June 15, 1862	29	1·45	3·75	4·32	0·57
64. March 19, 1863	28	1·40	3·70	4·01	0·31
62. Feb. 27, 1863	31	1·55	3·85	3·18	0·67
78. March 17, 1864	31	1·55	3·85	3·98	0·13
88. March 18, 1864	29	1·45	3·75	4·05	0·30
78. April 12, 1864	32	1·60	3·90	4·33	0·43
78. April 12, 1864	29	1·45	3·75	3·54	0·21
78. April 13, 1864	31	1·55	3·85	4·41	0·51
78. April 13, 1864	31	1·55	3·85	3·54	0·31
66. Aug. 31, 1864	30	1·50	3·80	3·71	0·09

TABLE XXI.—APPLICATION OF HARDING'S FORMULA, $R = 2{\cdot}72 + 0{\cdot}094\,V + \dfrac{0{\cdot}00484 \times S \times V^2}{P}$.

Passenger Trains.

Designation of the Train.	Speed an hour.	Gross Weight in tons.	Value of the Second Term.	Value of the Third Term.	Total Value by Calculation.	Value by Experiment.	Excess of the Value by Calculation.
	kilomètres.				kilogs.	kilogs.	
35. April 27, 1862	47	90	4·40	0·58	7·70	6·24	1·46
36. May 6, 1862	46	101	4·32	0·52	7·56	5·54	2·12
40·26. April 28, 1866	44	101	4·13	0·48	7·33	6·43	0·90
44. June 8, 1866	45	107	4·23	0·47	7·42	5·73	1·69
40·35. April 24, 1866	45	50	4·23	1·00	7·95	7·44	0·51
40·35. April 26, 1866	41	56	3·86	0·75	7·33	7·27	0·06
2·16. June 6, 1866	46	58	4·32	0·91	7·95	7·56	0·39
35. April 27, 1862	54	90	5·10	0·81	8·63	6·95	1·68
35. May 1, 1862	50	101	4·72	0·62	8·06	6·03	2·03
36. May 6, 1862	54	101	5·10	0·72	8·54	6·03	2·51
35. May 7, 1862	50	106	4·72	0·59	8·03	6·71	1·32
40·23. April 28, 1866	52	101	4·90	0·67	8·29	6·54	1·75
35. June 4, 1866	54	105	5·10	0·69	8·51	6·95	1 56
36. April 30, 1862	58	91	5·45	0·92	9·09	8·03	1 06
35. Nov. 19, 1864	59	98	5·56	0·88	9·16	7·95	1 21
35. June 4, 1866	63	105	5·93	0·96	9·63	8·16	1 47
40·35. April 24, 1866	65	50	6·12	2·12	10·96	9·80	1·16
40·32. April 25, 1866	60	55	5·65	1·65	10·02	9·10	0·92
2·16. June 5, 1866	61	61	5·75	1·55	10·02	9·80	0·22
33. March 14, 1866	76	53	7·17	2·73	12·62	14·55	−1·93

2nd Group.—All Trains moving at a rate of speed greater than 32 kilomètres, upon a level, the curves being of a long radius.—Table XXI. gives the results of the application of Harding's formula to these trains. They are much too great for heavy trains, are nearly true for light stopping trains, and are too small for express trains of eight carriages. After many trials, we have been obliged to admit three series of coefficients. (See Table XXII.)

Trains moving at from 32 to 50 kilomètres an hour,

$$r = 1{\cdot}80 + 0{\cdot}80\,V + \frac{0{\cdot}009 \times S \times V^2}{P}. \qquad [c]$$

Trains moving at from 50 to 65 kilomètres an hour,

$$r = 1{\cdot}80 + 0{\cdot}08\,V + \frac{0{\cdot}006 \times S \times V^2}{P} \qquad [d]$$

Trains moving at 70 kilomètres an hour, and above,

$$r = 1{\cdot}80 + 0{\cdot}14\,V + \frac{0{\cdot}004 \times S \times V^2}{P}. \qquad [e]$$

To show the necessity of these different coefficients, we must remark that, in these formulæ, the term in V represents the resistance at the circumference of the wheels, which resistance increases with the speed and the oscillation, and that the term in V^2 represents the resistance of the air; the heavier the train, the more is the resistance due to the surface exposed to the wind proportionately reduced. The reason why this term contains the weight P as a denominator is therefore evident.

The formulæ [c], [d], and [e], give results that agree perfectly with those obtained by experiment. r being the coefficient of resistance a ton on a level and in a straight line, the additional resistance due to gradients, curves, and so on, may be calculated by the methods we have already given.

TABLE XXII.—APPLICATION OF NEW FORMULÆ TO THE RESISTANCE OF PASSENGER TRAINS.

Designation of the Train.	Speed an hour.	Gross Weight in tons.	Value of the Second Term.	Value of the Third Term.	Total Value by Calculation.	Total Value by Experiment.	Excess of the Value by Calculation.	Observations.
	kiloms.				kilogs.	kilogs.		
100. April 25, 1862	36	239	2·88	0·23	4·91	4·64	0·27	Speed from 32 to 50 kiloms. an hour. $R = 1{\cdot}80 + 0{\cdot}08\,V + \frac{0{\cdot}009 \times S\,V^2}{P}$.
100. April 25, 1862	38	227	3·04	0·26	5·10	4·60	0·50	
38. Dec. 5, 1862	37	200	2·96	0·29	5·05	4·67	0·38	
38. Dec. 16, 1862	39	174	3·12	0·38	5·30	4·43	0·87	
46. Nov. 19, 1864	44	120	3·52	0·70	6·02	5·18	0·84	
100. April 16, 1862	34	207	2·72	0·23	4·75	5·22	−0·47	
100. April 16, 1862	42	190	3·36	0·19	5·35	5·75	−0·40	
35. April 27, 1862	47	90	3·76	1·11	6·67	6·24	0·43	
36. May 6, 1862	46	101	3·68	0·95	6·43	5·54	0·89	
40·26. April 28, 1866	44	101	3·52	0·87	6·19	6·43	−0·24	
44. June 8, 1866	45	107	3·60	0·85	6·25	5·73	0·52	
40·35. April 24, 1866	45	50	3·60	1·83	7·23	7·95	−0·72	
40·35. April 26, 1866	41	56	3·28	1·37	6·45	7·33	−0·88	
2·16. June 6, 1866	46	58	3·68	1·62	7·10	7·95	−0·85	
35. April 27, 1862	54	90	4·32	0·97	7·09	6·95	0·14	Speed from 50 to 65 kiloms. an hour. $R = 1{\cdot}80 + 0{\cdot}08\,V + \frac{0{\cdot}006 \times S\,V^2}{P}$.
35. May 1, 1862	50	101	4·00	0·74	6·54	6·03	0·51	
36. May 6, 1862	54	101	4·32	0·86	6·98	6·03	0·65	
35. May 7, 1862	50	106	4·00	0·71	6·51	6·71	−0·20	
40·23 April 28, 1866	52	101	4·16	0·80	6·76	6·54	0·22	
35. June 4, 1866	54	105	4·32	0·82	6·94	6·95	−0·01	
36. April 30, 1862	58	91	4·64	1·10	7·54	8·03	−0·49	
35. Nov. 19, 1864	59	98	4·72	1·05	7·57	7·95	−0·38	
35. June 4, 1866	63	105	5·04	1·15	7·99	8·16	−0·17	
40·35. April 24, 1866	65	50	5·20	2·55	9·55	9·80	−0·25	
40·32. April 25, 1866	60	55	4·80	1·97	8·57	9·10	−0·53	
2·16. June 5, 1866	61	61	4·88	1·86	8·54	9·80	−1·26	
33. March 14, 1866	76	53	10·64	2·18	14·62	14·55	0·07	Speed > 70 kiloms. $R = 1{\cdot}80 + 0{\cdot}14\,V + \frac{0{\cdot}004 \times S\,V^2}{P}$.

Actual Horse-power to the Unit of Heating Surface.—Table XXIII. gives the maximum amount of work developed by different kinds of engines during the course of our experiments. The highest rates of speed may practically be fixed as follows;—

Crampton's engine	V = 80 kilomètres,	$22^m{\cdot}30$ a second.	
Mixed engines	V = 55	„	$15^m{\cdot}30$ „
Goods engine (wheels of $1^m{\cdot}40$)	V = 30	„	$8^m{\cdot}30$ „
„ (wheels of $1^m{\cdot}30$)	V = 26	„	$7^m{\cdot}20$ „
„ (8 wheels coupled)	V = 24	„	$6^m{\cdot}70$ „

Whence we conclude that at their greatest rates of speed, our several engines are capable of developing the following amounts of work;—

Crampton's engine	400 horse-power.
Mixed engines	300 "
Goods engine (wheels of 1m·40)	300 "
" " (wheels of 1m·30)	275 "
" " (8 wheels coupled)	400 "

Dividing the work by the heating surfaces of the engines, we obtain the actual horse-power to the square mètre. We have

Crampton's engine	4·3 horse-power.
Mixed engine (type 14)	3·0 "
" " (type 12)	3·6 "
Goods engine (type 20)	2·4 "
" " (type 15)	2·7 "
" " (8 wheels coupled)	2·0 "

follows from the above figures that the work in horse-power to the unit of heating surface increases with the speed, and with the dimensions of the furnace relatively to the total heating surface. Now, the speed which a locomotive is capable of maintaining, while exerting a given force, depends on the production of steam. The results of our experiments under this head will be found in Note C, and Table XXVIII.

TABLE XXIII.—GREATEST VALUE OF THE WORK OF ENGINES ACCORDING TO EXPERIMENT.

Designation of the Train.	Kind of Engine.	Speed an hour.	Work upon the Coupling.	Work to move the Motor.	Total Work at the circumference of the Driving-wheels.	Mean of the Work for each kind.	Observations.
		kiloms.	h.-p.	h.-p.	h.-p.	h.-p.	
33. March 13, 1866	Crampton's ..	78	262	115 (1)	377	392	(1) The work required to move the motor has been computed at 8 kilogrammes a ton, according to experiments made upon engines with free wheels and upon tenders. (2) The three experiments upon engines of type 1 were made with the escape closed. The production was difficult. (3) This large amount of work of 345 horse-power was maintained during a short distance only.
33. March 15, 1866	" ..	74	297	110	407		
1·16. June 7, 1866	Free wheels.—Type 1 ..	42	132	87 (2)	219	204	
1·35. June 4, 1866	" "	37	113	80	193		
1·38. July 21, 1866	" "	44	110	91	201		
36. Dec. 10, 1862	Mixed.—Type 14	45	204	58	261	297	
40·35. April 26, 1866	" " 12	70	159	120	279		
40·34. April 27, 1866	" " 12	48	175	116	291		
40·23. April 28, 1866	" " 14	47	244	101	345 (3)		
35. June 4, 1866	" " 14	63	227	81	308		
2·65. July 21, 1865	Goods.—Type 20	18	242	53	295	295	
1·68. July 8, 1864	" " 20	25	230	41	271		
1·67. July 6, 1864	" " 20	26	250	77	327		
3·64. June 22, 1864	" " 20	24	244	49	293		
1·68. June 21, 1864	" " 20	20	249	44	293		
1·68. June 20, 1864	" " 20	20	250	44	294		
89. April 14, 1864	Goods.—Type 15	24	239	33	272	261	
91. April 13, 1864	" " 15	28	225	38	263		
89. March 18, 1864	" " 15	31	232	43	275		
140. March 21, 1864	" " 15	18	183	50	233		
12·72. Jan. 13, 1866	Eight wheels coupled ..	21	297	71	368	346	
12·80. Jan. 11, 1866	" "	16	278	62	340		
12·78. Jan. 12, 1866	" "	23	265	71	336		
12·86. Dec. 22, 1865	" "	25	262	78	340		
E 74. March 21, 1867	" "	15	200	127	327		
E 74. March 22, 1867	" "	17	263	104	367		

Adhesion of Locomotives.—Table XXIV. contains trains in which a slipping of the wheels was observed. It gives the value of the adhesion of the engine when the lower limit was reached.

As an example, let us take train 140, March 21, 1863; goods engine, type 15; adhesive weight = 30,000 kilogrammes; nature of the line = gradient of 9 millimètres; temperature = 7°; wet and windy.—The tractive force upon the couplings of the tender was in this case 2850 kilogrammes: to find the total tangential force, we must add 700 kilogrammes expended in moving the motor itself (see Table XXIV.), which gives 3550 kilogrammes. The coefficient of adhesion was, therefore, $\frac{3550}{30000} = \frac{1}{8\cdot4}$.

In this case, notwithstanding the slipping, the speed was not less than 15 kilomètres an hour. To realize these conditions, the engines must be provided with sand-boxes in good working order.

It will be seen from Table XXIV. that during our experiments the coefficient of adhesion has been as low as $\frac{1}{13}$, but this was an exceptional case. We could not base our regulations for loading upon this coefficient.

TABLE XXIV.—DYNAMOMETRICAL EXPERIMENTS.—MINIMUM ADHESION.—CASES OF SLIPPING.

Numbers.	Designation of the Train.	Gross Weight of the Train.	Kind of Engine.	Adhesive Weight.	Nature of the Line.	Atmospheric Circumstances.	Tractive Force.	Force to move the Motor.	Total Tangential Force.	Coefficient of Adhesion.
		tons.		kilogs.	millimètres.		kilogs.	kilogs.	kilogs.	
1	140. March 21, 1863 ..	211	Goods.—Type 15	30,000	Incline 9 ..	Wet. T = + 7° ..	2850	700	3550	$\frac{1}{8\cdot4}$
2	91. April 13, 1864 ..	323	„ „ 15	30,000	Level	T = + 10° ..	2800	450	3250	$\frac{1}{9\cdot2}$
3	81. April 14, 1864 ..	267	„ „ 15	30,000	Incline 0·40 ..	T = + 10° ..	3120	260	3380	$\frac{1}{8\cdot8}$
4	1·68. July 8, 1864 ..	301	„ „ 20	33,000	„ 3 ..	Damp weather ..	2110	460	2570	$\frac{1}{12\cdot8}$
5	1·71. Feb. 4, 1867 ..	334	„ „ 15 and 20 ..	63,000	„ 9·25 ..	Light rain	4200	1480	5680	$\frac{1}{11\cdot1}$
6	2·16. July 21, 1865 ..	97	Mixed.—Type 14	20,000	„ 5 ..	Wet. T = + 20° ..	1290	550	1840	$\frac{1}{11}$
7	33. March 15, 1866 ..	52	Crampton's	10,000	Level	Nanteuil tunnel ..	1100	500	1600	$\frac{1}{6\cdot2}$
8	1·16. June 7, 1866 ..	53	Free wheels.—Type 1 ..	9,800	Incline 5 ..	Rilly tunnel	830	380	1210	$\frac{1}{8}$
9	1·38. July 21, 1865 ..	40	„ „ 1 ..	9,800	„ 5 ..	„	680	380	1060	$\frac{1}{9\cdot2}$

TABLE XXV.—DYNAMOMETRICAL EXPERIMENTS.—MAXIMUM ADHESION.

Designation of the Train.	Gross Weight of the Train.	Kind of Engine.	Adhesive Weight.	Nature of the Line.	Atmospheric Circumstances.	Tractive Force.	Force to move the Motor.	Total Tangential Force.	Coefficient of Adhesion.	Observations.
	tons.		kilogs.	millimètres.		kilogs.	kilogs.	kilogs.		
1·68. June 20, 1864	325	Type 20	33,000	Incline 6 ..	Dry weather	3800	590	4390	$\frac{1}{7\cdot5}$	Drawn by a mixed engine.
1·68. July 8, 1864	334	„ 20	33,000	„ 6 ..	Damp	3750	590	4340	$\frac{1}{7\cdot6}$	
1·68. July 27, 1864	393	„ 14	20,000	„ 6 ..	Dry	3550	500	4050	$\frac{1}{5}$	
1·43. July 19, 1865	64	„ 1	9,800	„ 9·25	„	950	530	1840	$\frac{1}{6}$	
31. Dec. 21, 1865	73	„ 7	19,000	„ 8 ..	„	1510	620	2130	$\frac{1}{8}$	
33. March 13, 1866	52	Crampton	10,000	Level	Nanteuil tunnel	920	500	1420	$\frac{1}{7}$	
33. March 15, 1866	53	„	10,000	Incline 5 ..	Dry	1180	500	1680	$\frac{1}{6}$	
40·32. April 25, 1866	55	Type 2 bis	11,000	„ 6 ..	„	850	530	1380	$\frac{1}{8}$	
1·35. June 4, 1866	45	„ 1	9,800	„ 9·25	A little damp	830	530	1360	$\frac{1}{7\cdot2}$	
1·16. June 7, 1866	53	„ 1	9,800	„ 9 ..	Dry	900	530	1430	$\frac{1}{6\cdot8}$	
2·65. July 20, 1865	255	„ 20	33,000	„ 10 ..	„	3710	740	4450	$\frac{1}{7\cdot4}$	
2·65. July 21, 1865	259	„ 20	33,000	„ 10 ..	„	3930	740	4670	$\frac{1}{7}$	
12·72. Jan. 13, 1866	522	Eight coupled wheels	46,000	„ 5 ..	„	4680	990	5670	$\frac{1}{8\cdot1}$	
12·80. Jan. 11, 1866	571	„ „ „	46,000	„ 5 ..	Wet, $t = + 7°$	4780	990	5770	$\frac{1}{8}$	
[illegible]	[illegible]	[illegible]	46,000	„ 5	Dry	4730	990	5720	$\frac{1}{8}$	

12·72. Jan. 11, 1866	523	Eight coupled wheels	46,000	Incline 5 ..	Heavy rain, $t = +3°$ ..	6210	990	7200	$\frac{1}{6·3}$	Force in a difficult passage.
1·69. Jan. 14, 1867	268	Types 20 and 14 ..	53,000	„ 9·25	Dry	4250	1340	5590	$\frac{1}{9·5}$	Double traction.
1·38. July 21, 1865	40	Type 1	9,800	„ 9 ..	„	700	530	1230	$\frac{1}{8}$	
E 63. March 20, 1867	156	„ 20	33,000	„ 15 ..	Rain and fog	2746	1040	3786	$\frac{1}{8·7}$	
E 63. March 20, 1867	156	„ 20	33,000	„ 16·90	„ „	3035	1200	4235	$\frac{1}{7·6}$	
E 63. March 20, 1867	156	„ 20	33,000	„ 19·80	„ „	3460	1300	4760	$\frac{1}{6·9}$	
E 74. March 22, 1867	233	Eight coupled wheels	46,000	„ 15·50	Windy. A little snow ..	4250	1700	5950	$\frac{1}{7·7}$	
91. April 13, 1864	338	Type 15	30,000	„ 0·40	Dry	4750	274	5020	$\frac{1}{5·9}$	Start from station.
89. April 14, 1864	227	„ 15	30,000	„ 3·20	„	4350	400	4750	$\frac{1}{6·3}$	
66. April 15, 1864	377	„ 20	33,000	„ 3·50	„	5700	440	6140	$\frac{1}{5·3}$	
40·69. April 28, 1864	285	„ 11	27,000	Level	„	5800	230	6030	$\frac{1}{4·4}$	
40·69. April 29, 1864	184	„ 12	22,000	Incline 3·50	„	3520	370	3890	$\frac{1}{5·6}$	
1·67. July 6, 1864	163	„ 20	33,000	„ 10 ..	„	5420	790	6210	$\frac{1}{5·3}$	Start after a signal to stop,
1·67. July 26, 1864	170	„ 15	30,000	Level	Heavy rain	4480	250	4730	$\frac{1}{6·3}$	
75. Aug. 31, 1864	264	„ 11	27,000	Incline 5 ..	Dry	4890	450	5340	$\frac{1}{5}$	
12·80. Jan. 12, 1866	571	Eight coupled wheels	46,000	„ 5 ..	Rainy	8200	980	9180	$\frac{1}{5}$	Rupture of coupling.
12·80. Jan. 12, 1866	571	„ „ „	46,000	„ 3 ..	„	8500	850	9350	$\frac{1}{4·9}$	Start from station.
12·80. Dec. 22, 1865	476	„ „ „	46,000	„ 3 ..	Dry	7850	850	8700	$\frac{1}{5·2}$	
12·74. Jan. 9, 1867	370	Type 20	33,000	Level	„	7150	260	7410	$\frac{1}{4·4}$	
E 63. March 22, 1867	135	„ 20	33,000	Incline 20 ..	Snow and rain, $t = +3°$	5000	1300	6300	$\frac{1}{5·2}$	Start after signal to stop.
E 63. March 20, 1867	156	„ 20	33,000	„ 20 ..	Rain and fog, $t = 14°$ ..	7200	1300	8500	$\frac{1}{3·9}$	
35. Nov. 17, 1864	82	„ 14	20,000	„ 5 ..	Damp, $t = 8°$ ..	2830	450	3280	$\frac{1}{6·1}$	
46. Nov. 17, 1864	172	„ 14	20,000	Level	Rain, $t = +11°$	3200	200	3400	$\frac{1}{5·8}$	Start from station.
31. May 4, 1865	70	„ 7	19,000	„	Dry	2880	200	3080	$\frac{1}{6·1}$	
1·38. July 21, 1869	40	„ 1	9,800	„	„	1160	160	1320	$\frac{1}{7·4}$	
1·43. July 19, 1865	64	„ 1	9,800	„	„	1430	160	1590	$\frac{1}{6·2}$	
31. Dec. 21, 1865	73	„ 7	19,000	„	„	2230	200	2430	$\frac{1}{7·7}$	
33. March 15, 1866	53	Crampton	10,000	„	„	1430	200	1630	$\frac{1}{6·1}$	
33. March 16, 1866	53	„	10,000	„	„	1560	200	1760	$\frac{1}{5·7}$	
40·32. April 25, 1866	55	Type 2 bis	11,000	„	„	1600	200	1800	$\frac{1}{6·1}$	
40·32. April 25, 1866	77	„ 12	22,000	„	„	3200	200	3400	$\frac{1}{6·4}$	
40·35. April 26, 1866	87	„ 12	22,000	„	„	3400	200	3600	$\frac{1}{6·1}$	
40·35. April 26, 1866	56	„ 2 bis	11,000	„	„	1540	200	1740	$\frac{1}{6·3}$	
40·26. April 28, 1866	101	„ 14	20,000	„	„	3630	200	3830	$\frac{1}{5·7}$	
1·36. July 4, 1867	30	„ 1	9,800	„	Rain	1350	160	1510	$\frac{1}{6·5}$	

Table XXV. contains trains in the case of which traction was accomplished with very high values of adhesion without slipping. At the top are given the coefficients observed when the train was in motion, and which correspond to a long distance; at the bottom, the coefficients observed at starting, and due to an instantaneous effort.

The maximum value of the coefficient, during motion, was $\frac{1}{5}$. This is the higher limit of adhesion that will serve to regulate the loads which may be drawn by engines in fine weather. The minimum loads to be drawn in all weathers may be determined by taking the coefficients as $\frac{1}{9}$. In winter we cannot reckon upon an adhesion greater than this.

The variation in the speed of trains has considerable influence on adhesion. It has been observed that a train of eight carriages, moving on a level at the rate of 70 kilomètres an hour, requires as much adhesive force as the same train moving at 40 kilomètres up an incline of 9 millimètres.

At starting, the limit of adhesion is, on most occasions, nearly reached, and the coefficients found in these cases are higher than those found when the train is in motion. In practice, we may admit the coefficient at starting as $\frac{1}{5}$.

Practical Formula of the Power of an Engine.—The practical formula which we are about to give is derived solely from the results of our experiments.

Let P be the gross weight in tons which an engine is capable of drawing at a rate of speed V upon a line of known nature;
- r resistance of the weight P a ton;
- P′ the weight in tons of the engine and tender;
- r' the resistance of the weight P′ a ton, considering the engine and tender as mere vehicles;
- S the heating surface of the engine;
- N the actual horse-power to the unit of heating surface;
- P″ the adhesive weight of the engine, that is, the weight resting upon the points of the driving wheels in contact with the rails;
- m the coefficient of adhesion of the engine.

The force of the circumference of the wheels will be $\mathrm{P}r + \mathrm{P}'r'$.

V being the speed in mètres a second, the work to be effected is $(\mathrm{P}r + \mathrm{P}'r')\,\mathrm{V}$. And we ought to have

$$(\mathrm{P}r + \mathrm{P}'r')\,\mathrm{V} \leqq \mathrm{S} \times \mathrm{N} \times 75. \qquad [\mathrm{F}]$$

Besides this, to avoid slipping, we must have

$$(\mathrm{P}r + \mathrm{P}'r') \leqq m\,\mathrm{P}''. \qquad [\mathrm{F}']$$

By means of these two formulæ the load which a given engine is capable of drawing may be readily calculated. They will equally serve to solve the inverse problem which will oftener occur in practice.

To determine the principal elements of a locomotive to draw a load P at a rate of speed V upon a line of known nature, an approximative value must be given to P′ in equation [F], when the value of S may be deduced. Equation [F′] will enable us to determine P″.

The problem will have received its best solution if we succeed in making equal pair by pair the members of the relations [F] and [F′]. (For the other parts of the engine, see Note E.)

Note A.—Vis viva of a Pair of Wheels.—In making dynamometrical experiments on the resistance of trains, it may happen that each division of the distance upon which the experiments were made was travelled over at a uniform rate of speed; nothing can be easier than to measure the resistance of the train in such cases. But it happens very often that the speed varies considerably; in this case more calculation is requisite to find the coefficient of resistance. The formula which we have employed is the following:—

Let V_0 be the initial velocity in kilomètres an hour;
- V_1 the final velocity also in kilomètres an hour;
- P the weight of the train in tons;
- p the weight in kilogrammes of a revolving piece, such as wheel or axle;
- K the radius of gyration of a revolving piece;
- R the radius of the circle of revolution;
- n the number of vehicles;
- x the unknown coefficient of resistance a ton, at the mean speed of $\frac{\mathrm{V}_1 + \mathrm{V}_0}{2}$;
- F the mean tractive force in kilogrammes; and
- s the space traversed in mètres.

We have

$$\mathrm{F} \times s = x \times \mathrm{P} \times s \pm \frac{1}{2g}\left(\mathrm{P} \times 1000 + \Sigma p \frac{\mathrm{K}^2}{\mathrm{R}^2}\right) \times \frac{\mathrm{V}_1^2 - \mathrm{V}_0^2}{12{\cdot}96}. \qquad [1]$$

To find the value of the term $\Sigma p \frac{K^2}{R^2}$, we will apply the calculation to the circumference and to the axle. Say for the circumference $p' \times \frac{K'^2}{R^2}$.

We are here considering the rolling stock of the Eastern Railway Company, to whom most of the trains experimented on belonged. The outer diameter of the wheel is $1^m \cdot 03$ when the wheel is new. The tire when new is 55 millimètres in thickness; it is used till this thickness has been worn down to 25 millimètres. Therefore, considering the wheel as half worn out, we shall have

$$2R = 1^m \cdot 00. \quad K'^2 = \left(\frac{r + r'}{2}\right)^2 + \frac{1}{4} \times \left(\frac{r' - r}{2}\right)^2.$$

Whence we deduce $K' = 0 \cdot 48$, that is, K' is very nearly equal to the radius of the circle of revolution $\frac{K'^2}{R^2} = \frac{0 \cdot 48^2}{0 \cdot 50^2} = 0 \cdot 920$.

The weight of two pieces of tire, at the mean thickness of 40 millimètres, is 264 kilogrammes. Therefore, for a pair, we shall have $p' \frac{K'^2}{R^2} = 264 \times 0 \cdot 92 = 243$

For the axle let us say $p'' \times \frac{K''^2}{R^2}$

This term is very small. We find $p'' \times \frac{K''^2}{R^2} = 1 \cdot 08$.

For a pair of wheels we have $p' \frac{K'^2}{R^2} + p'' \frac{K''^2}{R^2} = 244 \cdot 08$.

For the carriage with two axles, $\Sigma p \frac{K^2}{R^2} = 488$.

And for the whole train, $\Sigma p \frac{K^2}{R^2} = n \times 488$.

Having made the necessary substitution and reduction, formula [1] becomes

$$F \times s = x \times P \times s \pm 0 \cdot 004 (P \times 1000 + n \times 488) \times (V_1^2 - V_0^2). \quad [2]$$

This formula was applied in calculating Tables A to J. By means of it we may calculate the mean resistance a ton x, even when the speed has varied throughout the time of the experiment.

Suppose a single carriage impelled at an initial velocity V_0 and then left to itself till it stopped. The third term of formula [2] is then $0 \cdot 004 \times (1000 P + 488) \times V_0^2$.

Substituting the weight in kilogrammes P' for the weight in tons P. and the speed in mètres a second V for the speed in kilomètres an hour V_0, we have

$$\begin{aligned} P' &= m \times g, \\ P &= 0 \cdot 001 \times P', \\ V_0 &= 3 \cdot 60 \times V; \end{aligned}$$

and the above term becomes $\left(\frac{1}{2} m + 25\right) \times V^2$.

Thus the rotating *vis viva* of a pair of carriage-wheels is expressed, in kilogrammètres, by $12 \cdot 5 V^2$.

The same calculation gives the following values of the *vis viva* of some of the wheels to which our experiments apply;—

1. For a pair of tender-wheels of $1^m \cdot 20$, $18 \cdot 4 \times V^2$;
2. For a pair of engine-wheels of $1^m \cdot 30$, $20 \times V^2$;
3. For a pair of engine-wheels of $1^m \cdot 68$, $27 \cdot 4 \times V^2$.

Note B.—Modification of the Dynamometer for the purpose of Calculating the Resistance caused by a Brake.—For the purpose of measuring the resistance caused by a brake, a cross-bar *b c* of wrought iron was fixed to the traction-bar. To the ends of this cross-bar were attached pieces connected with the hinder buffers, as shown in the figure.

If we have a brake in front of the dynamometer car, the front buffers of the car strike against and press upon this obstacle, and its hinder buffers *a* receive the thrust of the train rolling behind, transmitting it by means of the piece *b c* to the traction-bar of the dynamometer. In this way the thrust is made to act upon the dynamometrical spring, and we are thus enabled to measure accurately the influence of the brake.

Note C.—Production of Steam.—The speed of a locomotive while exerting a given force, depends on its production of steam. Tables XXVI., XXVII., and XXVIII., give the maximum consumption of water observed by us and the maximum value of the work in horse-power.

The maximum value of the work in horse-power includes the work developed upon the couplings of the tender, and the work required to move the motor itself. This latter work was computed in accordance with the contents of Table III. Where the total mean of the work is not given, that portion of the line was too irregular to allow us to find a mean. The water was measured in the tender by means of a graduated scale. The consumption of water does not correspond exactly to the production of steam, because a certain quantity of water is carried off; but at present we will not consider this quantity.

TABLE XXVI.—CONSUMPTION OF WATER.—PASSENGER TRAINS.

Designation of the Train.	Kind of Engine.	Gross Weight of the Train.	No. of Carriages.	Extreme Stations.	Distance run over.	Mean Inclination of the Line.	Greatest Gradient to be ascended.	Mean Speed.	Resistance of the Train a ton.	Total Consumption of Water.	Mean useful Work.	Consumption of Water: a kilomètre.	a ton and to the kilomètre.	a carriage and to the kilomètre.	to the useful horse-power and to the kilomètre.	
1	2	3	4	5	6	7	8	9	10	11	12	13	14	15	16	
		tons.			kiloms.	mills.	mills.	kiloms.	kilogs.	litres.	h.-p.	litres.	litres.	litres.	litres.	
33. March 13, 1866.	Express .. Crampton's ..	52	8	Paris, Epernay ..	141	0	5	73	17·29	7830	247	54	1·06	6·87	0·22	
33. March 14, 1866.	„ .. „ ..	53	8	„ „ ..	141	0	5	71	14·45	7570	201	53	1·00	6·62	0·26	1
33. March 15, 1866.	„ .. „ ..	52	8	„ „ ..	141	0	5	73	19·75	8680	280	61	1·17	7·62	0·22	
32. March 15, 1866.	Semi-direct Mixed.—Type 14	78	12	Château, Paris ..	94	0	5	45	11·10	5670	144	60	0·83	5·00	0·41	
35. Nov. 17, 1864.	„ „ „ 14	82	14	Paris, Epernay ..	141	0	5	48	8·43	9300	147	66	0·80	4·72	0·45	
32. March 13, 1866.	„ „ „ 14	88	14	Château, Paris ..	94	0	5	47	8·04	5280	131	56	0·63	4·00	0·45	2
32. March 14, 1866.	„ „ „ 12	78	12	„ „ ..	94	0	5	46	9·02	4616	132	49	0·62	4·08	0·47	
44. June 8, 1866.	„ Mixed.—Type 14	107	17	Epernay, Paris ..	141	0	5	45	5·73	8270	104	57	0·53	3·35	0·56	
35. June 4, 1866.	„ „ „ 14	105	17	Meaux, Château	51	0	5	49	7·03	3312	180	64	0·61	3·77	0·35	
40·35. April 24, 1866.	Stopping Train „ „ 12	67	11	Nangis, Romilly	59	0·8	5	46	12·50	3250	..	56	0·83	5·09		
40·32. April 25, 1866.	„ „ „ 12	75	12	Romilly, Paris ..	128	0·3	6	40	6·26	7300	..	57	0·76	4·75		
40·35. April 26, 1866.	„ „ „ 12	81	13	Nangis, Romilly	59	0·8	5	50	9·05	3140	..	53	0·65	4·07		
2·16. June 5, 1866.	„ „ „ 14	61	10	Charleville, Rethel	49	1·2	5	54	8·37	2610	..	53	0·86	5·30		
2·16. June 6, 1866.	„ „ „ 14	58	10	„ „	49	1·2	5	46	7·56	2240	..	45	0·77	4·50		
2·16. June 7, 1866.	„ „ „ 14	62	10	„ „	49	1·2	5	48	6·38	2300	..	47	0·75	4·70		3
40·35. April 2, 1866.	„ „ „ 12	87	14	Gretz, Nangis ..	31	0·4	5	43	8·26	1540	..	50	0·57	3·57		
2·43. June 6, 1866.	„ „ „ 14	68	11	Rheims, Charleville	88	0·5	10	36	6·92	4640	..	53	0·80	4·82		
1·38. July 22, 1865.	„ Free wheels. „ 1	40	7	Rheims, Epernay	30	0·6	9	40	7·66	1210	..	40	1·00	5·71		
2·43. July 22, 1865.	„ Mixed. „ 14	77	13	Rheims, Rethel ..	39	0	5½	41	6·64	2240	..	57	0·74	4·38		
2·16. July 20, 1865.	„ „ „ 14	78	12	Rethel, Rheims ..	39	0	6	42	6·28	2420	..	62	0·79	5·16		
40·35. April 24, 1866.	„ „ „ 12	70	12	Gretz, Nangis ..	31	0·4	5	44	12·00	2010	..	64	0·91	5·33		
40·35. April 24, 1866.	„ Mixed.—Type 12	50	8	Troyes, Bar-sur-Aube	54	1·0	6	46	7·44	2280	..	42	0·84	5·25		
31. May 4, 1865.	„ „ „ 7	70	12	Châlons, Blesme	45	0·9	3½	51	8·90	2915	130	64	0·91	5·33	0·49	
40·35. April 24, 1866.	„ „ „ 12	70	12	Paris, Nogent ..	16	0·7	5	46	10·00	1140	..	71	1·01	5·92		
40·35. April 26, 1866.	„ „ „ 12	76	12	Romilly, Troyes ..	38	1·0	5	51	7·94	2530	151	66	0·86	5·05	0·43	
31. May 4, 1865.	„ „ „ 7	70	12	Blesme, Bar ..	37	1·6	4	50	8·30	2270	169	61	0·87	5·08	0·38	4
31. Dec. 21, 1865.	„ „ „ 7	73	14	„ „ ..	37	1·6	4	47	10·01	2590	168	70	0·95	5·00	0·41	
40·35. April 26, 1866.	„ „ „ 12	87	14	Paris, Gretz ..	38	1·9	6	42	7·87	2900	..	76	0·87	5·40		
1·43. July 19, 1865.	„ Free wheels. „ 1	64	10	Epernay, Rheims	30	0·6	9·25	29	3·75	1680	..	56	0·87	5·60		
31. May 4, 1865.	„ Mixed. „ 7	70	12	Bar, Leronville ..	35	1·4	8	43	5·80	2480	..	71	1·01	5·92		
31. Dec. 21, 1865.	„ „ „ 7	73	14	Bar, Commercy ..	40	1·2	8	43	10·00	2740	..	68	0·93	4·86		
40·35. April 24, 1866.	„ Mixed.—Type 12	70	12	Nogent, Gretz ..	22	2·4	6	44	10·00	1720	168	78	1·11	6·50	0·46	
40·35. April 24, 1866.	„ „ „ 12	50	8	Bar, Chaumont ..	41	3·8	6	57	8·83	2770	131	67	1·34	8·37	0·51	5

Table XXVII.—Consumption of Water.—Goods Trains.

Date.	Kind of Engine.	Gross Weight of the Train.	Extreme Stations.	Distance experimented over.	Inclination of the Line.	Greatest Gradient to be ascended.	Mean Speed an hour.	Resistance of the Train a ton.	Effective Work in horse-power.	Total Consumption of Water.	Consumption of Water: to the kilomètre.	Consumption of Water: a ton to the kilomètre.	Consumption of Water: to the effective horse-power and to the kilomètre.	Observations.
1	2	3	4	5	6	7	8	9	10	11	12	13	14	15
		tons.		kiloms.	mills.	mills.	kiloms.	kilogs.		litres.	litres.	litres.	litres.	
11 Jan., 1866	8 wheels coupled	533	Forbach, St. Avold	19	2·5	5	16	3·30	238	4203	221	0·41	0·92	
10 Jan., 1866	„ „	469	„ „	19	2·5	5	17	3·00	237	3620	190	0·40	0·80	
10 Jan., 1866	„ „	473	„ „	19	2·5	5	15 } 17	2·60	205	3870	203 } 198	0·43 } 0·40	0·99 } 0·84	
23 Dec., 1865	„ „	485	„ „	19	2·5	5	19	3·01	265	3380	178	0·36	0·67	Water low.
22 Dec., 1865	„ „	476	„ „	19	2·5	5	17	3·23	233	3760	198	0·41	0·84	
21 March, 1867	„ „	210	Vielsalm, Gouvy	10	15·½	18	14 } 16	18·05	198	1940	194 } 196	0·92 } 0·88	0·98 } 0·86	
22 March, 1867	„ „	233	„ „	10	15·½	18	17 }	18·24	263	1980	198 }	0·84 }	0·75 }	
20 March, 1867	Goods.—Type 20	156	Trois-Ponts, Francorchamp ..	13	17·40	19·50	11 } 12	20·74	134	2790	214 } 202	1·37 } 1·39	1·59 } 1·48	
22 March, 1867	„ „ 20	135	„ „	13	17·40	19·50	13 }	20·40	137	2470	190 }	1·41 }	1·38 }	
26 July, 1864	„ „ 15	170	Ay, Germaine ..	12	9·25	9·25	15	4·47	126	2797	233	1·37	1·85	Heavy rain.
21 July, 1865	„ „ 20	259	Rethel, Launois	25	4·2	10	16	3·98	218	4670	187	0·72	0·86	
20 July, 1865	„ „ 20	255	„ „	25	4·2	10	16 } 19	3·15	191	3300	132 } 158	0·51 } 0·71	0·69 } 0·75	
6 July, 1864	„ „ 20	163	Amagne, Launois	17	6·2	10	24	6·03	235	2813	165	1·01	0·70	
20 June, 1864	„ „ 20	245	Bazancourt, Witry	11	4·0	6	22	5·35	194	1630	148	0·60	0·76	
8 July, 1864	„ „ 20	334	Rethel, Rheims ..	40	0	6	15	3·74	..	5707	143	0·43		
21 June, 1864	„ „ 20	300	„ „	40	0	6	19 } 20	4·47	..	4633	116 } 118	0·38 }		
20 June, 1864	„ „ 20	244	Rheims, Rethel ..	40	0	5·½	25	4·30	..	3550	84	0·34		
27 July, 1864	Mixed.—Type 14	354	„ „	40	0	6	20	3·34	..	5378	134	0·37		
1 Sept., 1864	Goods.—Type 20	316	La Vilette, Lagny	26	0·5	3·50	28	3·92	..	2230	85	0·27		
1 Sept., 1864	„ „ 20	310	Lagny, Meaux ..	17	0·3	3·50	28	3·46	135	1995	117	0·37	0·87	
1 Sept., 1864	„ „ 20	256	Meaux, La Ferté	21	0	5	23	3·76	140	2253	107	0·41	0·76	
31 Aug., 1864	„ „ 20	301	Lagny, Noisy ..	19	0·8	3·½	28	3·40	133	2200	115	0·38	0·86	
8 July, 1864	„ „ 20	333	Mohon, Rethel ..	46	1·2	6	20 } 26	4·64	..	5113	111 } 97	0·33 } 0·35		
6 July, 1864	„ „ 20	268	Charleville, Fumay	40	0·5	5	32	6·00	210	3691	92	0·34	0·44	Speed considerable.
31 Aug., 1864	„ „ 11	285	Lagny, Meaux ..	17	0·3	3·½	23	3·81	121	1642	96	0·33	0·78	
30 Aug., 1864	„ „ 11	196	Château, La Ferté	30	0	0·½	26	4·50	..	2400	80	0·40		
30 Aug., 1864	„ „ 11	198	La Ferté, Meaux	21	0	5	26	4·50	..	1525	72	0·36		
8 July, 1864	„ „ 20	270	Deville, Mohon ..	24	0	5	25	5·50	191	3756	156	0·57	0·82	Bad weather.
14 Feb., 1865	„ „ 15	185	Châlons, Epernay	31	0·4	0	37 } 29	6·67	160	3072	99 } 121	0·53 } 0·54	0·62 }	
14 Feb., 1865	„ „ 15	206	„ „	31	0·4	0·4	26 }	6·40	135	3390	109 }	0·53 }	0·80 }	

TABLE XXVIII.—GREATEST PRODUCTION OF STEAM.

Kind of Engine.	Date.	Mean Speed an hour.	No. of Kilomètres experimented over.	No. of Revolutions a second.	Work exerted upon the Train.	Work to move the Engine.	Mean Total of Work.	Total Heating Surface.	Weight of Water consumed.	Weight of Water consumed to the square mètre of Heating Surface an hour.
		kiloms.			h.-p.	h.-p.	h.-p.	sq. mèt.	kilogs.	kilogs.
Crampton's ..	33. March 15, 1866	73	141	2·83	297	110	407	91·27	8680	42
Free wheels. Type 1	1·16. June 7, 1866	42	30	2·18	..	..	..	67·91	2146	42
Mixed. „ 12	40·35. April 24, 1866	57	41	2·77	131	125	256	81·90	2770	38
„ „ 7	31. May 4, 1865	51	45	2·67	131	71	202	88·32	2915	33
„ „ 14	40·23. April 28, 1866	46	55	2·40	..	..	..	100·42	4264	32
„ „ 7	31. Dec. 21, 1865	47	37	2·45	173	66	239	88·32	2590	32
„ „ 12	40·35. April 24, 1866	44	22	2·14	177	68	245	81·90	1720	36
„ „ 12	40·35. April 26, 1866	42	38	2·05	150	65	215	81·90	2900	34
„ „ 12	40·35. April 26, 1866	51	38	2·47	150	79	229	81·90	2530	35
„ „ 12	40·35. April 24, 1866	46	16	2·22	..	..	..	81·90	1140	33
„ „ 14	1·68. July 27, 1864	22	40	1·05	..	..	..	100·42	5378	35
Eight coupled wheels	12·72. Jan. 11, 1866	16	19	1·13	..	..	..	193·63	4203	18
„ „	E. 74. March 21, 1867	17	10	1·19	263	104	367	203·63	1980	16
Goods.—Type 20	E. 63. March 22, 1867	13	13	0·81	132	54	186	126·70	2470	20
„ „ 20	E. 63. March 20, 1867	12	13	0·76	140	50	190	126·70	2790	20
„ „ 20	1·68. July 8, 1864	25	24	1·57	190	44	234	126·70	3756	28
„ „ 20	1·67. July 6, 1864	24	17	1·52	236	74	310	126·70	2813	29
„ „ 15	78. Feb. 14, 1865	37	31	2·52	160	71	231	100·42	3072	32
„ „ 15	61. Feb. 14, 1865	26	31	1·77	135	50	185	100·42	3390	26
„ „ 15	1·67. July 26, 1864	15	12	1·02	126	53	179	100·42	2797	32
„ „ 11	75. Aug. 31, 1864	18	21	1·14	106	26	132	98·80	2715	22
„ „ 11	66. Aug. 30, 1864	26	38	1·65	148	33	181	98·80	4063	25

Of passenger engines, Crampton's developed the greatest amount of work, namely, 407 horse-power. The maximum production of steam to the square mètre of the whole heating surface was 42 kilogrammes. The mixed engine, type 12, produced a mean equal to that of the mixed engine, type 14, and yet type 12 possesses a much smaller surface. But we see from Table I. that its fire-box is as large as that of type 14, only the tubes are considerably shorter. The production of steam in passenger engines is, therefore, not sensibly increased by lengthening the tubes beyond about 3 mètres.

With respect to the wheels, the greatest production corresponds to the greatest number of revolutions a second. For Crampton's engine, to 2·83 turns correspond a production of 42 kilogrammes; for the mixed engine, type 12, to 2·77 turns correspond a production of 38 kilogrammes. The great consumption of water by the engine, type 1, is owing to the enormous quantity carried off by the steam, on account of the very small size of the boiler.

In general, for goods engines, the production to the square mètre of heating surface by the hour is less than for passenger engines. For engines with four coupled axles moving at full speed, this production was only 16 to 18 kilogrammes. These engines moved very slowly. The engine with wheels of $1^{m}\cdot30$, moving at the rate of 37 kilomètres an hour, gave 32 kilogrammes. The engine, type 20, moving at full speed with regard to adhesion, gave a production of 20 kilogrammes. The same engine moving at full speed with regard to production, gave 29 kilogrammes, at a speed of 24 kilomètres.

The production of steam by the hour to the square mètre of heating surface, and, consequently, the work, increases with the speed of the engine. From this point of view there is, therefore, a gain in increasing the speed up to the limit that may be reached without injury to the mechanism.

Consumption of Water to the Kilomètre.—Table XXVI. gives the consumption of water to the kilomètre by various kinds of passenger engines. The mean consumption in places where the line was nearly level is the same for Crampton's as for the mixed engines, namely, about 57 litres. Upon an incline of $1^{mm}\cdot5$ the consumption of mixed engines was 64 litres; upon an incline of 3 millimètres it was 72 litres.

Table XXVII. relates to goods trains; from this Table we see that the consumption by goods engines varied, according to the nature of the line, from 97 to 233 litres. Upon inclines of 18 and 20 millimètres, the engine (type 20) consumed more water than the engine with four coupled axles, because in the former it was necessary to force the production by closing the escape.

Consumption of Water to the Carriage or to the Ton drawn.—Tables XXVI. and XXVII. give also the consumption of water to the carriage, or to the ton drawn for each kilomètre.

1. *Passenger Trains.*—The divisions (1) and (2) of the Table relate to the same line, namely, from Paris to Epernay. It will be seen that upon this portion of line, the traction of a carriage of an express train required 7·04 litres of water, whilst a carriage of a stopping train required only 4·45 litres to the kilomètre. (Table XXVI.)

2. *Goods Trains.*—The traction of a ton, gross weight, required 0·35 litre to the kilomètre on a level in fine weather, 0·54 litre on a level in bad weather, and 1·39 litre on an incline of $19^{mm}\cdot50$. (Table XXVII.)

The traction of a ton weight at an equal rate of speed upon portions o. line similar in nature, required 0·88 litre with an engine with eight coupled wheels, and 1·39 litre with an engine of type 20.

Engines with eight coupled wheels are, therefore, economical, as they utilize in a high degree the mechanical force of the steam. (Large boiler, long tubes.)

Consumption of Water to the Horse-power.—Other things being equal, this consumption decreases with the increase of speed. Thus, for express trains, it was 0·23 litre, and for stopping trains 0·44 litre.

In the case of a very slow goods train this consumption reached 1·48 litre, and even 1·85. These results are accounted for by the fact that in engines moving at a high rate of speed the steam is expanded more than in engines moving at a slow rate. Under the same conditions, the consumption to the horse-power and by the kilomètre was 0·86 litre for the engines with eight coupled wheels, and 1·48 litre for the engine type 20, which shows again the advantage offered by the former engines from an economical point of view.

Water carried off by the Steam and lost by Leakage.—If we compare the actual consumption of water measured in the tender with the theoretical consumption calculated from the volume described by the piston during the length of admission, we find the former much greater than the latter. This is because a large quantity of water is carried off in an unvapourized state, and some is lost by leakage. Our calculations show that this loss formed the following fractions of the total consumption;—

Train (1) 68,	June 21, 1864	.. ..	30 per cent.
„ (1) 67,	July 6, 1864	.. ..	24 „
„ (1) 68,	July 8, 1864	.. ..	31 „
„ (2) 65,	July 21, 1866	.. ..	39 „

From this we conclude that for engines of type 20, moving at nearly full speed, the waste of water is about 31 per cent. We may remark that in these examples the engines were in a good condition.

It is plain that leakage should be prevented as much as possible. But is it desirable to dry the steam? A saving of fuel would be effected; but beyond a certain degree of dryness, other and greater disadvantages would ensue. The piston, the cylinder, and the stuffing are rapidly destroyed when the steam is too dry. It has been noticed in the case of drivers who are accustomed to keep the water low, that they consume less fuel than those who prefer to keep the water high; but, on the other hand, it has been noticed again that the engines of the former get soonest out of order. The question is thus reduced to one of cost of fuel.

Note D.—Friction peculiar to an Engine at Work.—Besides the resistances which we have found for engines in motion without working, there is a certain supplementary resistance created by the reciprocal pressures of the moving parts. Supposing the engine to move slowly enough to allow us to consider the steam as acting with full pressure from the beginning of the admission, and also to consider the resisting pressure as equal to the pressure of the atmosphere, and calling

p the absolute pressure of the steam in the boiler,
p' the pressure of the atmosphere,
s the surface of the piston in square mètres,
l the length of the admission,
l' the length of the expansion,
l'' the length of clearance at the escape,
l_1 the length of the escape,
l'_1 the length of the compression,
l''_1 the length of clearance at the admission,

we have as the positive work of the gases behind the piston during a single stroke of the piston,

$$10000 \times s \left[p\, l \left(1 + 2{\cdot}30 \log. \frac{l + l'}{l} \right) + p'\, l'' \right].$$

The negative or resisting work of the gases in front of the piston is expressed by

$$10000 \times s \left(p' l_1 + p\, l''_1 \times 2{\cdot}30 \log. \frac{l'_1 + l''_1}{l''_1} + p\, l''_1 \right).$$

The formula expressing the work to the single stroke of the piston is, therefore,

$$T = 10000\, s \times \left[p\, l \left(1 + 2{\cdot}30 \log. \frac{l - l'}{l} - p' (l_1 - l'') \right) - p\, l''_1 \times 2{\cdot}30 \log. \frac{l'_1 + l''_1}{l''_1} - p\, l''_1 \right].$$

For the engine of type 20, with the driving lever at the 6th division, we have

s = 0·1515 mètre.	l'_1 = 0·163 mètre.
l = 0·272 „	l''_1 = 0·016 „
l' = 0·249 „	p = 8·250 kilogrammes.
l'' = 0·136 „	p' = 1·033 „
l_1 = 0·478 „	

Substituting these values in the preceding formula, we find T = 4500 kilogrammètres.

For one revolution of the wheels, we shall have for the two pistons, 4 × T = 18000 kilogrammètres.

If we suppose a speed of 15 kilomètres an hour, we shall have a second,

$$18000 \times \frac{4{\cdot}16}{4{\cdot}40} = 17000 \text{ kilogrammètres, or 226 horse-power.}$$

Now let us consider the case of the train (1) 68 of the 8th July, 1864. This train was drawn up an incline of 6 millimètres by an engine of type 20, at a speed of 15 kilomètres an hour, the driving lever standing at the 6th division, and the useful work, measured on the couplings of the first carriage, was 175 horse-power; which gives as the quantity of work absorbed by the train $175 \times 75 = 13125$ kilogrammètres. To this must be added the work absorbed by the resistances of the engine and tender, at a speed of 15 kilomètres an hour ($4^{m} \cdot 16$ a second), up an incline of 6 millimètres (16 kilogrammes a ton for the traction and the friction as mere vehicles); this work is found to be 3461 kilogrammètres.

We have, therefore,

	Kilogrammètres.
Work absorbed by the train	13125
Work absorbed by the engine	3461
Total	16586

On the other hand, we found;—

Work produced by the steam	17000
Difference	414

Thus the work absorbed by the extra friction caused by the pressure of the steam was about 400 kilogrammètres. On account of the hypotheses which we have made, however, this quantity is rather above than below the truth.

The engine weighing 33 tons, the resistance due to these frictions, measured at the circumference of the wheels, was $\frac{414}{4 \cdot 16 \times 33} = 3^{k} \cdot 02$ to the ton. The whole resistance due to the friction of the mechanism and to the pressure of the steam is, therefore, $6 \cdot 05 + 3 \cdot 02 = 9 \cdot 07$. (See analysis of the various resistances in engines.) Strictly, this resistance does not apply to the circumference of the wheel, but it absorbs a portion of the pressure exerted by the steam upon the pistons.

From what we have given above, we may decompose the total amount of work in the following manner;—

175 horse-power exerted upon the couplings of the first carriage,
51 horse-power absorbed by the engine and tender.

In the case of a level way and the same speed, the disposable work upon the couplings would have been greater. The total amount of work remaining the same, it would be decomposed as follows;—

192 horse-power upon the couplings,
34 horse-power absorbed by the engine and tender.

Effective Work of a Locomotive Goods Engine.—If we call *effective work* the ratio of the useful to the theoretical work of the steam, calculated by the formula given above, we have $\frac{192}{226} = 0 \cdot 85$.

The effective work was, therefore, 85 per cent. under the circumstances of the experiment, on a level way at full traction, and moving at a slow rate of speed. But we do not consider this the proper way to define the effective work.

Influence of the Mode of Distribution on the Effective Work.—The theoretical work of the steam is that which would correspond to a fictitious distribution, one which would consume the same weight of steam that we have supposed, but which would utilize this steam perfectly. We will suppose, therefore, that the admission is of the same length as before, say 272 millimètres, but that all the remainder of the stroke, say 385 millimètres, is by expansion. The expenditure of steam would be the same at the same speed; but the theoretical work would be the maximum work corresponding to the given length of admission.

In this case the theoretical formula becomes

$$T = 10000 \times s \left[p\, l \left(1 + 2 \cdot 30 \log. \frac{l + l'}{l} \right) - p' (l' + l) \right].$$

If we apply this formula to the engine type 20, with the driving lever at the 6th division, we find that the theoretical work to each revolution of the wheels would be 21000 kilogrammètres. The theoretical work with Stephenson's slide-valve, in the same circumstances, being 18000 kilogrammètres to each revolution, we have $\frac{18000}{21000} = 0 \cdot 86$; which shows that the mode of distribution by means of Stephenson's slide-valve reduces, in the case in question, by 14 per cent. the useful work which might be obtained from the steam.

The actual effective work of an engine being, in our opinion, the ratio of the useful work developed upon the train, to the theoretical work of the steam corresponding to a perfect distribution, we have as the effective work of the engine in the case in question,

$$\frac{192}{\frac{21000}{75} + \frac{4 \cdot 16}{4 \cdot 00}} = \frac{192}{264} = 0 \cdot 72.$$

Effective Work of a Passenger Engine.—As an example of the amount of effective work in the case of a passenger engine, we will cite the following experiment;—

Train 32, of March 15, 1866. From Château-Thierry to Paris, a distance of 94 kilomètres.
Mean inclination of the line, nothing.
Volume of water consumed, 5670 litres.
Driving lever at the 1st division, regulator half open.
Mean useful work, 144 horse-power.
Mean speed, 45 kilomètres an hour.

Mixed engine, type 14 .. { Diameter of the cylinder, 42 centimètres. Stroke of the piston, 56 centimètres. Diameter of the driving wheels, $1^m \cdot 68$.

Length of the admission, on the left side of the piston, $0^m \cdot 095$.
„ „ on the right side of the piston, $0^m \cdot 133$.

The length of the admission not being the same on both sides of the piston, we shall make the calculation for each side.

Mean pressure indicated by the manometer = $7\frac{1}{2}$ atmospheres. The pressure may rise to 8 atmospheres; but the train being light, it did not reach its maximum.

Supposing the pressure in the boiler of $7\frac{1}{2}$ atmospheres to have existed upon the piston throughout the admission, the steam to have been expanded throughout the remainder of the stroke, and the resisting pressure throughout the whole stroke to have been equal to the atmospheric pressure the theoretical work of the steam is given by the formula

$$T = 10000 \times s \left[p l \left(1 + 2 \cdot 30 \log. \frac{l + l'}{l} \right) - p' (l + l') \right].$$

We find for the left side of the piston, T = 2046 kilogrammètres; and for the right side of the piston, T = 2704 kilogrammètres. The theoretical work to each revolution of the wheels is $2\,T + 2\,T' = 9500$ kilogrammètres. But at a speed of 45 kilomètres an hour, the number of revolutions a second is $2 \cdot 38$, which gives as the theoretical work a second, $9500 \times 2 \cdot 38 = 22600$ kilogrammètres, or 301 horse-power. Thus the effective work was $\frac{144}{301} = 0 \cdot 48$. It must be observed that the engine was not working at its maximum power.

Note E.—Dimensions of the Parts of Engines.—The formulæ which we have already given enable us to calculate the heating surface and the adhesive weight. It now remains for us to fix the dimensions of the principal parts. Our experiments lead to the following results;—

Fire-box.—The surface of the fire-box ought to be not less than;—from 6 to 8 square mètres, for a total heating surface of 80 to 150 square mètres; from 9 to 10 square mètres, for a total heating surface of 150 to 200 square mètres.

Cylinders.—The diameter of the cylinders will be from

38 to 40 centimètres for engines with free wheels,
40 „ 42 „ for mixed engines,
42 „ 45 „ for engines with 6 wheels coupled,
48 „ 50 „ for engines with 8 wheels coupled.

Large cylinders give great power to start a load, but they use a large quantity of steam when in motion. In every case their diameter will be fixed by these two considerations.

Wheels.—The diameter of the wheels should be sufficiently great to prevent a too high rate of speed in the oscillating parts. The heavier the mechanism, the lower will be the limit of this speed. We recommend the following limits (whence result the maximum number of revolutions a second);—

2 to $2^m \cdot 30$ for express engines, free wheels,
($V = 80^k$) 3·5 to 3·1 revolutions a second;
$1 \cdot 60$ to $1^m \cdot 80$ for passenger mixed engines,
($V = 55^k$) 2·8 to 2·7 revolutions a second;
$1^m \cdot 40$ for goods engines to be used on a level,
($V = 30^k$) 1·9 revolution a second;
$1 \cdot 20$ to $1^m \cdot 30$ for goods engines to be used on steep gradients,
($V = 24^k$) 1·7 to 1·6 revolution a second.

Note F.—Power of Brakes.—A few observations on the action of brakes may be added to the remarks we have already made on the subject of the resistance of *any vehicle* running upon a railway.

Usually, brakes are applied so as to stop the wheels altogether, that is, the wheels are made to slide upon the rails while remaining motionless relatively to the vehicle; usually also, the brake-blocks are of wood, and of that kind of wood which offers the greatest friction, in order to reduce the force applied to them. When the action of the brakes is continued for any considerable length of time, that portion of the wheel which is in contact with the rail is worn away, thereby causing a flat surface in the tire of the wheel, and the wooden blocks are quickly destroyed. To remove these two defects, it has been proposed to allow the wheels to revolve slowly in contact with the brake-blocks, and to substitute iron for wooden blocks. The question is whether this change would reduce the useful effect of the brakes. For the purpose of solving this important question, the following experiments were undertaken. Two trains were made up of an engine, the dynamometer car, and a brake-van. The brake-van of the first train was provided with wooden brake-blocks; in the second train, a van with cast-iron blocks was substituted for it.

The two series of experiments were made upon the same piece of line, when the rails were

quite dry. A determinate speed was kept for a certain time, then, at a given signal, the steam was shut off; at the same instant the brakes were applied and the train left till it came to a stand. By means of the dynamometer car the distance, the speed, and the resistance offered by the brake-van were accurately measured. Another mode of experimenting consisted in applying the brakes while the engine continued to draw, keeping up during the time of the experiment a uniform speed.

TABLE XXIX.—EXPERIMENTS ON THE POWER OF BRAKES.

Nature of the Brake.	Numbers of the Experiments.	Speed kept up.	Speed when the Steam was shut off.	Sliding on the Rails.	Distance Run while Stopping.	Mean Resistance of the Brake.	Observations.
		kiloms.	kiloms.		mètres.	kilogs.	
Wooden blocks.	1	..	46	Complete	550	760	The sliding is *complete* when the wheels are fixed, *partial* when they turn slowly.
	2	..	42	,,	450	740	
	3	..	45	,,	630	625	
	4	..	55	,,	830	740	
	5	..	39	,,	295	830	
	6	..	41	,,	394	850	Weight of the brake with wooden blocks, 6398 kilogrammes.
	7	29	..	,,	..	980	
	8	38	..	,,	..	810	
	9	33	..	,,	..	960	
	10	41	..	,,	..	880	
				Mean resistance ..		817	
Cast-iron blocks.	1		36	Partial	262	1030	Weight of the brake with iron blocks, 5730 kilogrammes.
	2	..	36	,,	317	950	
	3	..	32	,,	210	1050	
	4	..	64	,,	960	985	
	5	..	44	,,	358	1110	
	6	..	47	,,	595	910	
	7	..	33	,,	315	985	
	8	37	..	,,	..	1140	
	9	34	..	,,	..	1030	
	10	31	..	,,	..	1390	
	11	36	..	,,	..	1080	
	12	26	..	,,	..	1320	
	13	32	..	,,	..	1220	
	14	64	..	,,	..	260	
	15	36	..	,,	..	1400	
	16	43	..	,,	..	1340	
	17	30	..	,,	..	1400	
	18	43	..	,,	..	1200	
	19	47	..	,,	..	1000	
	20	28	..	,,	..	1340	
	21	33	..	,,	..	1100	
				Mean resistance ..		1100	

Table XXIX. gives the results of these experiments. The mean speed is the same in both series. The resistance of the brakes provided with wooden blocks, when the wheels were prevented from revolving at all, was 817 kilogrammes, while that of the brake furnished with cast-iron blocks, when the wheels were made to revolve slowly, was 1100 kilogrammes. Referring these resistances to the weight of the corresponding brake-van, we find them equal to

0·128 of the weight for the brake with fixed wheels,
0·192 of the weight for the brake with wheels turning slowly.

Thus, a considerably greater effect can be obtained from a brake, by allowing the wheels to turn slowly than by stopping them altogether.

From a theoretical point of view, this fact may be explained in the following way;—

Let W be the weight of the brake-van; s the distance run from the moment when the wheels are stopped till the train is brought to a standstill, and f the coefficient of friction of the tire on the rail.

The negative work of the brake will be expressed by $W \times f \times s$.

Again, let f' be the coefficient of friction of the tire which turns slowly, and s' the distance traversed by a point of the tire, relatively to the rail, during the whole of the time occupied in stopping.

The negative work of the brake will be expressed by $W \times f' \times s'$.

If the initial *vis viva* is the same in both cases, we shall have $W f s = W f' s'$. But we have $s < s$. Therefore, f' must be greater than f.

The excess of f' over f may be thus explained.

The effect of the friction of the wheel against the brake-block is to bring the exterior molecules of the tire into the position represented by Fig. 2613.

This position of the molecules is reversed at each revolution by the friction caused by the sliding on the rails. These two frictions in contrary directions, increase each other in a marked degree.

2613.

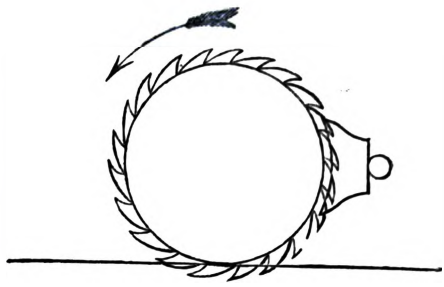

But when the wheel is fixed, a small flat face is formed upon which the sliding is effected with greater facility. These hypotheses are confirmed by practice. As a matter of fact, the tires which rub against the iron blocks are worn out in a short time, without in any degree destroying their circular form.

We must remark that the resistance of brakes increases as the speed diminishes. This fact is shown by Table XXIX., and especially by the form which the curves of the diagrams assume. We perfectly agree on this subject with M. Bochet, whose experiments are discussed in the Annales des Mines.

Note G.—Lowest Limit to the Speed of Trains.—The study of our dynamometrical curves has convinced us that it is not advantageous to reduce the speed of goods trains to a very low rate, even where the gradients are steep. So long as the train moves at a pretty good speed, the oscillations of the dynamometrical curve are inconsiderable, as shown by the dotted line in Fig. 2614; the train being in this case kept steady by the *vis viva* which it has stored up; but if the train moves very slowly, the oscillations of the curve become great, as shown by the full line.

2614.

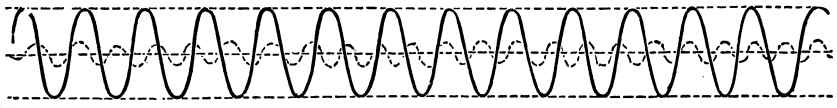

In this case, the upper and lower limits *b b*, *c c*, of the oscillations diverge widely from the line *a a*, representing the mean tractive force; this force does not sensibly change so long as a speed of 20 kilomètres an hour is not exceeded. We see, therefore, that a very low rate of speed, the effect of which is to raise the upper limit *b b*, would require greater forces for the same mean traction. Consequently there will be greater risk of slipping. Besides, the production of steam becomes difficult when the speed is very low. For these reasons, we think that the lowest limit of the speed of trains should be fixed at 12 kilomètres an hour.

Note H.—Resistance of Engines without Tenders.—The resistances of engines may be considered as composed of three elements;—

1. Resistances due to the motion of the engine considered as a mere vehicle;
2. Resistances due to the friction of the mechanism;
3. Resistances due to the additional friction caused by the pressure of the steam.

For goods engines with three coupled axles, we found, to the ton;—

For the resistances due to the first	$6^k \cdot 15$
„ „ „ second	$6^k \cdot 05$
„ „ „ third	$3^k \cdot 02$
Total	$15^k \cdot 22$

The total resistance to the ton for a goods engine is, therefore, $15^k \cdot 22$. It will be noticed that the resistance due to the second cause is nearly equal that due to the first.

We were unable to determine the third element in the case of mixed engines with free wheels, because at the usual speed of those engines we could not make the hypothesis on which we calculated goods engines. There is reason to believe, however, that in this kind of engine, the additional resistances due to the pressure of the steam do not exceed those found for goods engines, and that further, they are about equal to these latter. Admitting this, we shall have approximatively;—

Passenger Engines (Free Wheels).

1. For the resistances due to the first cause	$3^k \cdot 00$
2. „ „ „ second „	$2^k \cdot 00$
3. „ „ „ third „	$3^k \cdot 00$
Total resistance a ton	$8^k \cdot 00$

Mixed Engines.

1. For the resistances due to the first cause	$5^k \cdot 22$
2. „ „ „ second „	$4^k \cdot 38$
3. „ „ „ third „	$3^k \cdot 00$
Total resistance a ton	$12^k \cdot 60$

TABLE A.—EXPERIMENTS ON THE RESISTANCE OF GOODS TRAINS.

No.	Designation of Train.	Type of Engine, and Adhesive Weight.	Distance experimented over in kilomètres.	Gross Weight of Train.	No. of Trucks, &c.	Proportional No. of Trucks.	Proportional No. of Trucks, &c., lubricated with Oil.	Nature of the Line.	Minimum Radius of Curves.	Temperature.	State of the Atmosphere.	Speed an hour.	Force of Traction.	Force the ton (absolute).	Force the ton (corrected for gravity).	Observations.
				tons.		per 100.	per 100.	mills.	mètres.	°		kiloms.	kilogs.	kilogs.	kilogs.	
1	141. April 11, 1862	6 wheels, 30 tons	7	196	30	..	..	Incline 9·25	800	+15	Calm and dry ..	15	2780	14·20	4·95	
2	143. April 12, 1862	6 „ 30 „	7	171	21	..	..	„ 9·25	800	+15	Opposing wind ..	19	2820	16·50	7·25	
3	562. June 12, 1862	6 „ 27 „	7	215	26	..	..	„ 6·00	1500	+23	Calm and dry ..	19	1970	9·10	3·10	
4	567. June 27, 1862	6 „ 27 „	9	221	27	..	..	„ 1·60	1000	+22	„ „ ..	29	1330	6·03	4·43	
5	567. June 27, 1862	6 „ 27 „	9	222	30	..	..	„ 4·40	3000	+22	„ „ ..	23	1870	8·43	4·03	
6	563. June 14, 1862	6 „ 27 „	6	238	34	..	..	„ 2·00	2000	+15	Slight wind ..	24	1560	6·55	4·55	
7	563. June 14, 1862	6 „ 27 „	8	221	32	..	..	„ 0·40	1500	+15	„ „ ..	33	1140	5·16	4·76	
8	563. June 14, 1862	6 „ 27 „	7	242	35	..	..	„ 1·15	800	+15	„ „ ..	31	1300	5·34	4·19	
9	199. June 20, 1862	6 „ 30 „	8	446	42	..	..	Level ..	Straight	+14	Damp	32	1800	3·73	3·73	Double traction.
10	199. June 20, 1862	6 „ 30 „	6	567	53	..	..	Incline 1·81	2000	+14	„	20	2800	4·93	3·12	„ „
11	199. June 20, 1862	6 „ 30 „	18	490	42	..	..	„ 1·80	800	+14	„	28	2370	4·76	2·96	„ „
12	199. June 20, 1862	6 „ 30 „	6	212	23	..	..	„ 3·62	800	+14	„	31	1370	6·82	3·20	
13	199. June 20, 1862	6 „ 30 „	7	265	27	..	..	„ 5·50	1200	+14	„	22	2500	9·25	3·75	
14	565. June 11, 1862	6 „ 27 „	8	223	36	..	..	„ 6·00	1200	+	„	21	2240	10·00	4·00	
15	562. June 15, 1862	6 „ 27 „	7	301	33	..	..	„ 0·44	1500	+20	Calm and dry ..	29	1170	3·88	4·32	
16	562. June 15, 1862	6 „ 27 „	7	241	27	..	..	„ 6·00	1500	+20	„ „ ..	22	2240	9·28	3·28	
17	564. June 24, 1862	6 „ 30 „	10	180	30	..	..	„ 3·54	800	+18	Light dry wind ..	24	1540	8·60	5·06	
18	564. June 24, 1862	6 „ 30 „	8	210	41	..	..	„ 4·17	1000	+18	„ „ ..	20	1920	9·33	5·16	
19	564. June 24, 1862	6 „ 30 „	5	210	41	..	..	„ 0·60	1000	+18	„ „ ..	28	1230	5·85	6·45	
20	562. June 25, 1862	6 „ 30 „	10	196	28	..	..	„ 1·08	1000	+22	Slight rain ..	28	1460	7·08	6·00	
21	562. June 25, 1862	6 „ 30 „	5	193	28	..	..	„ 5·50	1000	+22	„ „ ..	20	2216	11·20	5·70	
22	563. June 24, 1862	6 „ 30 „	6	173	23	..	..	„ 6·00	1000	+23	Fair	22	1720	9·90	3·90	
23	142. Nov. 23, 1862	6 „ 30 „	5	176	29	20	7	„ 9·00	1000	+ 4	Calm and dry ..	16	2700	15·30	6·30	Double traction.
24	142. Nov. 24, 1862	6 „ 30 „	6	216	48	33	2	„ 9·00	1000	+ 5	„ „ ..	23	3780	17·50	8·50	
25	139. Nov. 23, 1862	6 „ 30 „	6	167	22	40	10	„ 9·25	800	+ 4	Calm, foggy ..	18	2580	15·45	6·20	
26	139. Nov. 24, 1862	6 „ 30 „	9	151	23	22	5	„ 9·25	800	+ 3	Calm and dry ..	18	2540	16·80	7·55	
27	85. Nov. 26, 1862	6 „ 27 „	3	207	33	26	13	„ 5·00	720	+ 5	Fair	17	2190	10·52	5·52	
28	85. Nov. 26, 1862	6 „ 27 „	29	207	33	26	13	Level ..	1000	+ 5	„	30	1180	5·70	5·70	
29	85. Nov. 26, 1862	6 „ 27 „	6	207	33	26	13	Incline 0·32	1400	+ 5	„	26	1310	6·32	6·00	
30	85. Nov. 26, 1862	6 „ 27 „	7	207	33	26	13	Level ..	1000	+ 5	„	29	1220	5·89	5·89	
31	77. Dec. 6, 1862	6 „ 27 „	3	189	30	18	..	„ ..	1000	+12	„	32	983	5·20	5·20	
32	77. Dec. 6, 1862	6 „ 27 „	22	172	28	18	..	„ ..	1000	+12	„	26	980	5·70	5·70	
33	64. Mar. 19, 1863	6 „ 30 „	31	321	29	50	14	Incline 0·18	1000	+ 6	„	28	1230	3·83	4·01	
34	140. Mar. 21, 1863	6 „ 30 „	6	211	29	0	7	„ 9·00	1000	+ 7	Rain, slight wind	17	2830	13·40	4·40	Frequent slippings.
35	140. Mar. 21, 1863	6 „ 30 „	4	211	29	0	7	„ 5·00	Straight	+ 7	„ „	24	1960	9·29	4·29	Through a tunnel.
36	85. Feb. 27, 1863	6 „ 30 „	18	249	37	30	3	„ 0·40	1500	+ 2	Calm, rather foggy	25	1320	5·28	4·88	
37	85. Feb. 27, 1863	6 „ 30 „	14	267	39	30	3	„ 0·55	1000	+ 1	„ „	27	1580	5·92	5·37	
38	85. Feb. 27, 1863	6 „ 30 „	9	267	41	27	3	„ 1·40	1000	+ 1	„ „	22	1800	6·75	5·35	
39	62. Feb. 27, 1863	6 „ 30 „	10	306	28	..	..	„ 0·70	1500	+13	Fair	31	880	2·88	3·58	Many trucks.
	Carried forward		359													

TABLE B.—EXPERIMENTS ON THE RESISTANCE OF GOODS TRAINS.

No.	Designation of Train.	Type of Engine, and Adhesive Weight.	Distance experimented over in kilomètres.	Gross Weight of Train.	No. of Trucks, &c.	Proportional No. of Trucks.	Proportional No. of Trucks, &c., lubricated with Oil.	Nature of the Line.	Minimum Radius of Curves.	Temperature.	State of the Atmosphere.	Speed an hour.	Force of Traction.	Force the ton (absolute).	Force the ton (corrected for gravity).	Observations
	Brought forward		359	tons.		per 100.	per 100.		mills.	mètres.	°		kiloms.	kilogs.	kilogs.	kilogs.	
40	62. Feb. 27, 1863	6 wheels, 30 tons	10	306	28	..	..	Incline	0·40	1000	+13	Fair	25	840	2·74	3·14	Many trucks.
41	62. Feb. 27, 1863	6 „ 30 „	11	322	30	..	..	„	0·40	1500	+13	„	27	980	3·04	3·44	
42	62. Feb. 27, 1863	6 „ 30 „	9	322	30	..	..	„	0·40	Straight	+13	„	31	820	2·54	2·94	
43	85. Feb. 22, 1863	6 „ 30 „	8	281	37	16	..	„	0·40	„	+ 3	Calm, rather foggy	26	1430	5·09	4·69	
44	85. Feb. 22, 1863	6 „ 30 „	12	281	37	16	..	„	0·40	1500	+ 3	„ „	25	1450	5·16	4·76	
45	85. Feb. 22, 1863	6 „ 30 „	9	281	37	16	..	„	0·40	1000	+ 2	„ „	25	1580	5·63	5·23	
46	85. Feb. 22, 1863	6 „ 30 „	10	281	37	16	..	„	0·70	Straight	+ 1	„ „	25	1570	5·58	4·88	
47	39. Feb. 20, 1863	6 „ 30 „	4	166	23	..	..	„	9·25	800	+ 0	Calm and dry ..	11	2640	15·90	6·65	
48	83. March 16, 1864	6 „ 30 „	11	196	29	31	7	Level	..	1200	+ 6	„ „ ..	22	980	5·00	5·00	
49	83. March 16, 1864	6 „ 30 „	6	196	29	31	7	Incline	0·50	1000	+ 6	„ „ ..	26	910	4·64	5·14	
50	83. March 16, 1864	6 „ 30 „	7	279	37	25	5	Level	..	2000	+ 9	„ „ ..	33	1130	4·12	4·12	
51	91. March 16, 1864	6 „ 30 „	9	160	25	..	..	Incline	0·40	Straight	+ 2	Dry, contrary wind	29	1200	7·50	7·10	
52	91. March 17, 1864	6 „ 30 „	8	160	25	..	..	„	0·40	1500	+ 2	„ „	28	1230	7·67	7·27	
53	91. March 17, 1864	6 „ 30 „	5	169	26	..	..	„	0·40	1000	+ 5	„ „	24	1240	7·33	6·93	
54	91. March 17, 1864	6 „ 30 „	6	169	26	..	..	„	0·70	Straight	+ 5	„ „	25	1420	8·38	7·68	
55	91. March 17, 1864	6 „ 30 „	7	160	25	..	..	„	1·50	„	+ 8	„ „	30	1500	9·37	7·87	
56	78. March 17, 1864	6 „ 30 „	5	478	47	..	..	„	1·00	„	+14	Dry	29	1830	3·82	4·82	Double traction, many trucks.
57	78. March 17, 1864	6 „ 30 „	8	478	47	..	..	„	0·70	„	+14	„	29	1910	3·98	4·68	
58	78. March 17, 1864	6 „ 30 „	10	474	46	..	..	„	0·40	1500	+14	„	31	1700	3·58	3·98	
59	78. March 17, 1864	6 „ 30 „	8	474	46	..	..	„	0·40	Straight	+14	„	33	1410	2·98	3·38	
60	88. March 18, 1864	6 „ 30 „	10	249	26	45	..	„	0·70	1500	+12	Dry, windy ..	29	825	3·35	4·05	
61	88. March 18, 1864	6 „ 30 „	4	249	26	45	..	„	0·40	1000	+10	„ „ ..	32	1050	4·22	4·62	
62	88. March 18, 1864	6 „ 39 „	13	241	29	40	..	„	0·40	1500	+ 8	„ „ ..	30	940	3·90	4·30	
63	89. March 18, 1864	6 „ 30 „	9	264	38	30	8	„	0·40	Straight	+11	„ „ ..	28	1370	5·19	4·79	
64	89. March 18, 1864	6 „ 30 „	8	264	38	30	8	„	0·20	1000	+11	„ „ ..	18	1625	6·14	5·94	
65	89. March 18, 1864	6 „ 30 „	5	264	38	30	8	„	0·70	Straight	+11	„ „ ..	26	1750	6·62	5·92	
66	89. March 18, 1864	6 „ 30 „	7	258	37	30	8	„	1·50	„	+11	„ „ ..	32	1980	7·65	6·15	
67	89. March 18, 1864	6 „ 30 „	11	254	36	30	8	„	2·90	1000	+11	„ „ ..	21	1970	7·16	4·26	
68	83. April 6, 1864	6 „ 30 „	6	298	51	40	..	„	0·20	2000	+	.. ..	31	1570	5·26	5·06	
69	83. April 6, 1864	6 „ 30 „	5	244	44	40	..	Level	..	1000	+	.. ..	26	1200	4·93	4·93	
70	83. April 6, 1864	6 „ 30 „	13	226	41	40	..	„	..	1200	+	.. ..	25	1180	5·24	5·24	
71	66. April 7, 1864	6 „ 33 „	16	329	34	60	..	„	..	1000	+	Slight wind, dry	24	1530	4·68	4·68	
72	81. April 11, 1864	6 „ 33 „	19	254	43	30	5	„	..	1000	+12	Fair	25	1380	5·43	5·43	
73	81. April 11, 1864	6 „ 33 „	29	254	43	30	5	Incline	0·20	1000	+12	„	23	1456	5·73	5·53	
74	78. April 12, 1864	6 „ 30 „	10	300	28	71	3	„	0·30	2000	+12	„	32	1215	4·03	4·33	
75	78. April 12, 1864	6 „ 30 „	16	326	30	71	3	„	0·20	1000	+18	„	29	1090	3·34	3·54	
76	91. April 13, 1864	6 „ 30 „	7	338	40	..	..	„	0·40	Straight	+ 7	Dry, windy ..	28	1750	5·18	4·78	
	Carried forward		710														

TABLE C.—EXPERIMENTS ON THE RESISTANCE OF GOODS TRAINS.

No	Designation of Train.	Type of Engine, and Adhesive Weight.	Distance experimented over in kilomètres.	Gross Weight of Trains.	No. of Trucks, &c.	Proportional No. of Trucks.	Proportional No. of Trucks, &c., lubricated with Oil.	Nature of the Line.	Minimum Radius of Curves.	Temperature.	State of the Atmosphere.	Speed an hour.	Force of Traction.	Force the ton (absolute).	Force the ton (corrected for gravity).	Observations.
	Brought forward		710	tons.		per 100.	per 100.		mills.	mètres.	°		kiloms.	kilogs.	kilogs.	kilogs.	
77	91. Apr. 13, 1864	6 wheels, 30 tons	8	338	40	..	..	Incline	0·40	1500	+10	Dry, windy ..	27	1880	5·54	5·14	
78	91. Apr. 13, 1864	6 „ 30 „	3	323	38	..	..	Level	..	1000	+10	„ „ ..	26	1920	5·92	5·92	
79	91. Apr. 13, 1864	6 „ 30 „	5	323	38	..	..	Incline	0·40	1000	+10	„ „ ..	27	1880	5·80	5·40	
80	91. Apr. 13, 1864	6 „ 30 „	7	323	38	..	..	„	0·70	Straight	+12	„ „ ..	28	2130	6·59	5·89	
81	91. Apr. 13, 1864	6 „ 30 „	14	323	38	..	..	„	1·35	1500	+16	„ „ ..	27	2190	6·75	5·40	
82	78. Apr. 13, 1864	6 „ 30 „	4	534	55	40	..	„	0·70	Straight	+19	„ „ ..	23	1850	3·45	4·15	Double traction.
83	78. Apr. 13, 1864	6 „ 30 „	4	543	56	40	..	„	0·40	1000	+19	„ „ ..	24	1960	3·60	4·00	„ „
84	78. Apr. 13, 1864	6 „ 30 „	7	536	55	36	..	„	0·40	1500	+19	„ „ ..	31	2150	4·01	4·41	„ „
85	78. Apr. 13, 1864	6 „ 30 „	11	536	55	36	..	„	0·40	Straight	+19	„ „ ..	31	1690	3·14	3·54	„
86	89. Apr. 14, 1864	6 „ 30 „	10	240	44	66	9	„	0·40	„	+ 8	Dry, strong wind	30	1545	6·43	6·03	
87	89. Apr. 14, 1864	6 „ 30 „	6	240	44	66	9	„	0·40	1500	+ 8	„ „	27	1590	6·60	6·20	
88	89. Apr. 14, 1864	6 „ 30 „	3	267	48	66	9	Level	..	1000	+10	„ „	20	2070	7·73	7·73	
89	89. Apr. 14, 1864	6 „ 30 „	8	267	48	66	9	Incline	0·40	1000	+10	„ „	27	2135	8·00	7·60	
90	89. Apr. 14, 1864	6 „ 30 „	6	245	45	66	9	„	0·70	Straight	+10	„ „	26	2000	8·16	7·46	
91	89. Apr. 14, 1864	6 „ 30 „	4	245	45	66	9	„	1·70	10000	+12	„ „	28	2090	8·53	6·83	
92	89. Apr. 14, 1864	6 „ 30 „	12	227	42	66	9	„	3·13	1000	+14	„ „	21	2680	11·73	8·60	
93	89. Apr. 14, 1864	6 „ 30 „	4	199	39	66	9	„	2·70	1000	+18	„ „	31	2400	10·60	7·90	
94	88. Apr. 14, 1864	6 „ 30 „	3	322	38	20	..	Level	..	1500	+19	Dry, windy ..	25	1330	4·13	4·13	
95	88. Apr. 14, 1864	6 „ 30 „	10	310	35	20	..	Incline	0·70	Straight	+15	„ „ ..	26	1135	3·65	4·35	
96	88. Apr. 14, 1864	6 „ 30 „	6	310	35	40	..	„	0·40	1000	+12	„ „ ..	25	1270	4·08	4·48	
97	88. Apr. 14, 1864	6 „ 30 „	12	322	38	20	..	„	0·40	1500	+ 6	„ „ ..	26	1360	4·23	4·63	
98	66. Apr. 15, 1864	6 „ 33 „	4	272	30	50	..	„	0·40	Straight	+20	Fair	40	1115	4·08	4·48	
99	66. Apr. 15, 1864	6 „ 33 „	2	377	40	50	..	„	3·50	2000	+20	„	22	2490	6·57	3·07	
100	40·69. Apr. 28, 1864	6 „ 27 „	6	278	35	33	8	„	5·70	1200	+20	„	23	2430	8·74	3·04	
101	40·69. Apr. 28, 1864	6 „ 27 „	3	285	37	33	8	„	0·80	Straight	+20	„	33	1350	4·73	3·93	
102	40·69. Apr. 28, 1864	6 „ 27 „	7	509	60	..	..	„	0·20	1000	+18	.. ..	26	1525	3·00	3·20	Double traction.
103	40·69. Apr. 29, 1864	Mixed, 22 „	6	184	31	..	..	„	5·70	1200	..	.. ..	17	1580	8·55	2·85	
104	40·69. Apr. 29, 1864	„ 22 „	4	184	31	..	..	„	0·34	Straight	..	.. ..	24	940	5·11	4·77	
105	81. June 17, 1864	6 wheels, 33 „	4	336	55	27	..	„	0·43	1000	+21	Fair	17	1230	3·65	3·22	
106	81. June 17, 1864	6 „ 33 „	2	327	54	27	..	„	3·50	1000	+21	„	10	2115	6·45	2·95	
107	1·67. June 20, 1864	6 „ 30 „	9	334	46	39	11	„	9·25	800	..	„	20	4480	13·45	4·20	Double traction.
108	2·67. June 20, 1864	6 „ 33 „	5	271	38	47	..	„	5·50	2000	+25	Dry, slight wind	20	2560	9·45	3·95	
109	2·67. June 20, 1864	6 „ 33 „	4	232	35	50	..	„	5·50	1500	+25	„ „	26	2330	10·00	4·50	
110	2·67. June 20, 1864	6 „ 33 „	4	228	35	50	..	„	3·00	800	+25	„ „	28	1710	7·44	4·44	
111	2·68. June 20, 1864	6 „ 33 „	5	325	36	40	8	„	5·70	700	..	Dry	20	3340	9·87	4·17	
112	2·68. June 20, 1864	6 „ 33 „	9	270	32	40	8	„	5·66	1500	..	„	19	2725	10·09	4·43	
113	2·68. June 21, 1864	6 „ 33 „	11	300	32	60	15	„	5·66	700	..	.. ..	17	3040	10·13	4·47	
114	3·64. June 22, 1864	6 „ 33 „	7	318	50	50	..	„	1·50	..	..	.. ..	26	1660	5·20	3·70	
	Carried forward		949														

Table D.—Experiments on the Resistance of Goods Trains.

No.	Designation of Train.	Type of Engine, and Adhesive Weight.	Distance experimented over in kilomètres.	Gross Weight of Train.	No. of Trucks, &c.	Proportional No. of Trucks.	Proportional No. of Trucks, &c., lubricated with Oil.	Nature of the Line.	Minimum Radius of Curves.	Temperature.	State of the Atmosphere.	Speed an hour.	Force of Traction.	Force the ton (absolute).	Force the ton (corrected for gravity).	Observations.
	Brought forward		949	tons.		per 100.	per 100.	mills.	mètres.	°		kiloms.	kilogs.	kilogs.	kilogs.	
115	3·64. June 22, 1864	6 wheels, 33 tons	2	309	49	50	..	Incline 4·50	..	..	Slight wind ..	19	2410	7·82	3·12	
116	3·64. June 22, 1864	6 „ 33 „	3	309	49	50	..	Level ..	..	..	„ „ ..	24	1490	4·82	4·82	
117	3·64. June 22, 1864	6 „ 33 „	7	306	48	50	..	Incline 5·00	..	..	.. ..	22	2705	8·84	3·84	
118	2·75. July 5, 1864	6 „ 33 „	8	303	50	25	..	„ 5·50	1500	+12	.. ..	18	2855	9·42	3·92	
119	2·75. July 5, 1864	6 „ 33 „	4	303	50	25	..	„ 3·00	800	+12	.. ..	22	2205	7·26	4·29	
120	2·67. July 6, 1864	6 „ 33 „	8	163	25	33	12	„ 10·00	1000	+16	Strong wind ..	24	2460	15·09	5·09	
121	2·67. July 6, 1864	6 „ 33 „	3	268	40	20	8	„ 0·20	500	+16	„ „ ..	39	1560	5·80	6·00	
122	2·67. July 6, 1864	6 „ 33 „	6	267	43	20	8	„ 0·50	500	+16	„ „ ..	32	1480	5·52	6·02	
123	2·70. July 7, 1864	6 „ 33 „	3	362	30	83	13	„ 2·40	500	..	Rain, slight wind	25	2190	5·58	3·18	
124	2·70. July 7, 1864	6 „ 33 „	10	362	30	83	13	„ 1·40	500	..	Slight wind ..	29	1890	5·23	3·83	
125	2·70. July 7, 1864	6 „ 33 „	3	362	30	83	13	„ 3·50	500	..	„ „ ..	21	2670	7·10	3·60	
126	2·70. July 7, 1864	6 „ 33 „	3	362	30	83	13	„ 0·90	500	..	„ „ ..	31	1470	3·90	3·00	
127	2·68. July 8, 1864	6 „ 33 „	3	295	29	50	6	„ 2·40	500	..	Strong wind ..	23	2330	7·92	5·52	
128	2·68. July 8, 1864	6 „ 33 „	3	240	33	50	6	„ 2·80	500	..	„ „ ..	23	2070	7·80	5·00	
129	2·68. July 8, 1864	6 „ 33 „	4	247	32	50	6	„ 0·20	500	..	„ „ ..	33	1780	6·20	6·00	
130	2·68. July 8, 1864	6 „ 33 „	6	301	33	50	6	„ 1·89	1000	..	„ „ ..	23	2160	7·20	5·31	
131	2·68. July 8, 1864	6 „ 33 „	5	330	34	50	6	„ 4·00	1000	..	„ „ ..	18	2730	8·32	4·32	
132	2·68. July 8, 1864	6 „ 33 „	2	340	35	50	6	„ 5·00	1000	..	„ „ ..	13	3110	9·15	4·15	
133	2·68. July 8, 1864	6 „ 33 „	3	368	37	50	6	„ 3·00	Straight	..	„ „ ..	25	2540	6·88	3·88	
134	2·68. July 8, 1864	6 „ 33 „	16	334	35	50	6	„ 5·70	700	..	„ „ ..	15	3150	9·44	3·74	
135	2·67. July 26, 1864	6 „ 33 „	6	152	27	33	15	„ 10·00	1000	..	„ „ ..	22	2460	16·25	6·25	
136	2·67. July 26, 1864	6 „ 33 „	4	164	30	33	15	„ 10·00	1000	..	„ „ ..	21	2590	15·75	5·75	
137	1·67. July 26, 1864	6 „ 30 „	6	170	28	18	..	„ 9·25	800	..	Calm, rain ..	15	2335	13·72	4·47	
138	2·68. July 27, 1864	Mixed, 20 „	10	261	31	..	..	„ 5·66	700	..	Calm and dry ..	20	2350	9·00	3·34	
139	(1) 68. July 27, 1864	6 wheels, 30 „	6	317	40	..	..	„ 9·00	1000	..	„ „ ..	15	3930	12·35	3·35	Double traction.
140	(1) 68. July 27, 1864	6 „ 30 „	2	317	40	..	..	„ 5·00	Straight	..	„ „ ..	23	2760	8·76	3·76	Double traction, through a tunnel.
141	66. Aug. 30, 1864	6 „ 27 „	6	242	32	33	7	Level ..	2000	+26	Slight wind, dry	28	1055	4·36	4·36	
142	66. Aug. 30, 1864	6 „ 27 „	2	238	31	33	7	Incline 3·50	Straight	+26	„ „ „	27	1850	7·80	4·30	
143	75. Aug. 31, 1864	6 „ 27 „	12	307	42	14	7	„ 0·80	1000	+20	„ „ „	20	1535	4·99	4·19	
144	75. Aug. 31, 1864	6 „ 27 „	3	307	42	14	7	Level ..	2000	+20	„ „ „	27	1180	3·83	3·83	
145	75. Aug. 31, 1864	6 „ 27 „	3	297	41	14	7	„ ..	1000	+20	„ „ „	14	2270	7·65	4·15	
146	75. Aug. 31, 1864	6 „ 27 „	4	273	40	14	7	Incline 0·20	1000	+20	„ „ „	30	987	3·61	3·41	
147	75. Aug. 31, 1864	6 „ 27 „	6	279	43	14	7	„ 5·00	1000	+20	„ „ „	12	2410	8·64	3·64	
148	75. Aug. 31, 1864	6 „ 27 „	4	264	41	14	7	Level ..	1000	+20	„ „ „	21	1200	5·54	4·54	
149	66. Aug. 31, 1864	6 „ 33 „	5	332	34	25	11	„ ..	1000	..	Dry	25	1340	4·03	4·03	
150	66. Aug. 31, 1864	6 „ 33 „	6	332	34	25	11	Incline 2·50	1000	..	„	17	1880	5·64	3·14	
151	63. Aug. 31, 1864	6 „ 33 „	2	296	32	25	11	Level ..	1000	..	„	30	1100	3·71	3·71	
152	66. Aug. 31, 1864	6 „ 33 „	2	301	32	25	11	Incline 3·50	2000	..	„	19	1860	6·15	2·65	
	Carried forward		1140													

TABLE E.—EXPERIMENTS ON THE RESISTANCE OF GOODS TRAINS.

No.	Designation of Train.	Type of Engine, and Adhesive Weight.	Distance experimented over in kilomètres.	Gross Weight of Train.	No. of Trucks, &c.	Proportional No. of Trucks.	Proportional No. of Trucks, &c., lubricated with Oil.	Nature of the Line.	Minimum Radius of Curves.	Temperature.	State of the Atmosphere.	Speed an hour.	Force of Traction.	Force the ton (absolute).	Force the ton (corrected for gravity).	Observations.
	Brought forward		1140	tons.		per 100.	per 100.	mills.	mètres.	°		kiloms.	kilogs.	kilogs.	kilogs.	
153	81. Sept. 1, 1864	6 wheels, 33 tons	6	318	52	40	7	Incline 0·45	1000	+25	Calm and dry ..	29	1450	4·19	3·74	
154	81. Sept. 1, 1864	6 „ 33 „	2	321	51	40	7	„ 3·50	1000	+25	„ „ ..	15	2130	6·65	3·15	
155	81. Sept. 1, 1864	6 „ 33 „	2	299	49	40	7	„ 0·20	1000	+25	„ „ ..	34	1190	4·54	4·34	
156	81. Sept. 1, 1864	6 „ 33 „	2	271	46	40	7	„ 5·00	Straight	+25	„ „ ..	16	2200	8·10	3·10	
157	75. Feb. 13, 1865	6 „ 30 „	12	175	38	80	25	„ 0·40	1500	− 3	„ „ ..	33	1345	7·67	7·27	
158	88. Feb. 13, 1865	6 „ 30 „	12	216	25	..	..	„ 0·40	1500	− 2	„ „ ..	31	1120	5·18	5·58	
159	88. Feb. 13, 1865	6 „ 30 „	10	216	25	..	..	„ 0·40	Straight	− 2	„ „ ..	33	954	4·40	4·80	
160	61. Feb. 14, 1865	6 „ 30 „	5	206	39	65	10	„ 0·40	„	− 3	„ „ ..	26	1402	6·80	6·40	
161	78. Feb. 14, 1865	6 „ 30 „	9	185	22	35	10	„ 0·40	1500	− 1	Dry, slight wind	37	1240	6·65	7·05	
162	78. Feb. 14, 1865	6 „ 30 „	10	185	22	35	10	„ 0·40	Straight	− 1	„ „ ..	39	1020	5·52	5·92	
163	2·65. July 20, 1865	6 „ 33 „	10	255	35	35	20	„ 10·00	1000	+20	Calm and dry ..	15	3345	13·15	3·15	
164	2·65. July 21, 1865	6 „ 33 „	8	259	39	40	30	„ 10·00	1000	+25	Dry, slight wind	16	3625	13·98	3·98	
165	12·80. Dec. 22, 1865	8 „ coupled	10	476	38	92	76	„ 4·42	800	0	Calm and dry ..	17	3650	7·65	3·23	
166	12·86. Dec. 22, 1865	8 „ „	3	480	38	90	70	„ 3·16	1000	− 3	„ „ ..	25	2810	5·84	2·68	
167	12·86. Dec. 22, 1865	8 „ „	7	480	38	90	70	„ 5·00	800	− 3	„ „ ..	13	3630	7·56	2·56	
168	12·80. Dec. 23, 1865	8 „ „	9	485	35	97	50	„ 4·84	800	0	„ „ ..	19	3810	7·85	3·01	
16.	12·86. Dec. 23, 1865	8 „ „	4	480	35	95	..	„ 3·25	1000	− 3	„ „ ..	19	2600	5·56	2·31	
170	12·86. Dec. 23, 1865	8 „ „	8	480	35	95	..	„ 4·73	800	− 3	„ „ ..	15	3640	7·55	2·82	
171	12·72. Jan. 10, 1866	8 „ „	5	469	36	97	..	„ 5·00	800	+ 1	Damp, slight wind	17	3760	8·00	3·00	
172	12·86. Jan. 10, 1866	8 „ „	5	473	40	97	..	„ 4·80	800	+ 3	Dry	16	3340	7·01	2·21	
173	12·86. Jan. 10, 1866	8 „ „	5	473	40	97	..	„ 5·00	800	+ 3	„	16	3760	7·99	2·99	
174	12·72. Jan. 11, 1866	8 „ „	7	533	40	97	..	„ 4·12	800	+ 3	Wind and rain ..	18	3835	7·18	3·06	
175	12·72. Jan. 11, 1866	8 „ „	5	533	40	97	..	„ 5·00	800	+ 3	„ „ ..	12	4690	8·78	3·78	
176	12·80. Jan. 11, 1866	8 „ „	5	571	44	95	36	„ 4·80	800	+ 7	„ „ ..	17	4310	7·55	2·75	
177	12·80. Jan. 11, 1866	8 „ „	4	571	44	95	36	„ 5·00	800	+ 7	„ „ ..	16	4610	8·05	3·05	
178	12·72. Jan. 12, 1866	8 „ „	8	522	41	97	45	„ 3·00	1000	+ 2	Dry, slight wind	23	3120	5·95	2·95	
179	12·72. Jan. 12, 1866	8 „ „	7	522	41	97	45	„ 5·00	800	+ 2	„ „	13	4510	8·65	3·65	
180	12·72. Jan. 13, 1866	8 „ „	7	522	40	93	30	„ 4·00	800	+ 1	Calm and dry ..	21	3870	7·42	3·42	
181	12·72. Jan. 13, 1866	8 „ „	5	522	40	93	30	„ 5·00	800	+ 1	„ „ ..	16	4490	8·56	3·56	
182	12·91. Jan. 12, 1866	8 „ „	2	317	70	..	..	„ 5·00	Straight	+ 2	Dry, slight wind	19	2860	9·79	4·79	Trains of empty trucks.
183	12·91. Jan. 13, 1866	8 „ „	2	311	71	..	..	„ 5·00	„	+ 1	Calm and dry .	24	2720	8·73	3·73	
184	(1) 71. Feb. 4, 1867	6 „ 33 tons	3	334	33	21	42	„ 9·25	800	..	Fine rain	17	4180	12·51	3·26	
185	(1) 71. Feb. 4, 1867	6 „ 33 „	6	334	33	21	42	„ 9·25	800	..	„	15	4148	12·42	3·17	Double traction, with frequent slippings, however.
186	(E) 63. Mar. 20, 1867	6 „ 33 „	3	156	12	40	66	„ 15·00	400	+14	Rain and fog ..	16	2746	17·60	2·60	
187	(E) 63. Mar. 20, 1867	6 „ 33 „	8	156	12	40	66	„ 16·89	400	+14	„ „ ..	12	3035	19·42	2·53	
188	(E) 63. Mar. 20, 1867	6 „ 33 „	3	156	12	40	66	„ 19·80	500	+14	„ „ ..	10	3460	22·18	2·38	
189	(E) 74. Mar. 22, 1867	8 „ coupled	6	233	16	..	100	„ 15·50	400	+ 4	Windy, and a little snow	17	4250	18·24	2·74	
	Total distance		1360													

TABLE F.—EXPERIMENTS UPON THE RESISTANCE OF MIXED TRAINS.

No.	Designation of Train.	Type of Engine, and Adhesive Weight.	Distance experimented over in kilomètres.	Gross Weight of Train.	No. of Trucks, &c.	Proportional No. of Trucks.	Proportional No. of Trucks, &c., lubricated with Oil.	Nature of the Line.	Minimum Radius of Curves.	Temperature.	State of the Atmospher	Speed an hour.	Force of Traction.	Force the ton (absolute).	Force the ton (corrected for gravity).	Observations.
				tons.		per 100.	per 100.	mills.	mètres.	°		kilons.	kilogs.	kilogs.	kilogs.	
1	100. April 16, 1862	6 wheels, 27 tons	12	207	28	.	..	Incline 0·06	1000	..	Calm and dry ..	34	1067	4·62	5·22	
2	100. April 16, 1862	6 „ 27 „	5	190	25	..	..	Level ..	1000	..	„ „ ..	42	1091	5·75	5·75	
3	100. April 16, 1862	6 „ 27 „	4	190	25	.	..	Incline 3·50	2000	..	„ „ ..	30	1360	7·77	4·27	
4	100. April 25, 1862	6 „ 27 „	14	239	24	0	..	„ 0·11	1000	..	„ „ ..	36	1106	4·53	4·64	
5	100. April 25, 1862	6 „ 27 „	24	227	25	0	..	Level ..	1000	..	„ „ ..	38	1043	4·60	4·60	
6	100. April 25, 1862	6 „ 27 „	4	227	25	0	..	Incline 3·50	2000	..	„ „ ..	30	1410	6·72	3·22	
7	38. Dec. 5, 1862	Mixed, 20 „	38	200	22	0	..	„ 0·15	1000	+12	Slight wind ..	43	1077	5·38	5·53	Double traction.
8	38. Dec. 5, 1862	„ 20 „	15	200	22	0	..	Level ..	1000	+12	„ „ ..	37	934	4·67	4·67	„
9	38. Dec. 5, 1862	„ 20 „	3	162	18	0	..	Incline 3·50	2000	+12	„ „ ..	40	1207	7·44	3·94	
10	100. Nov. 25, 1862	6 wheels, 27 „	16	212	27	37	11	„ 0·09	1000	+ 4	„ „ ..	35	1143	5·36	5·45	
11	100. Nov. 25, 1862	6 „ 27 „	23	197	24	40	15	Level ..	1000	+ 4	„ „ ..	34	1007	5·12	5·12	
12	100. Nov. 25, 1862	6 „ 27 „	3	197	24	40	15	Incline 0·04	Straight	+ 4	„ „ ..	35	1016	5·14	5·54	
13	100. Nov. 25, 1862	6 „ 27 „	5	197	24	40	15	„ 3·50	2000	+ 4	„ „ ..	30	1622	8·25	4·75	
14	38. Dec. 16, 1862	Mixed, 20 „	55	174	18	..	..	„ 0·09	1000	+ 1	Calm, foggy ..	39	755	4·34	4·43	
15	38. Dec. 16, 1862	„ 20 „	5	174	18	..	..	„ 3·50	2000	+ 1	„ „ ..	27	1052	6·75	3·25	
16	80. March 19, 1864	6 wheels, 33 „	14	245	30	33	..	„ 0·16	1000	..	Calm and dry ..	27	1030	4·20	4·36	
17	80. March 19, 1864	6 „ 33 „	21	230	27	40	..	„ 0·16	1000	..	„ „ ..	28	1030	4·48	4·58	
18	80. March 19, 1864	6 „ 33 „	5	230	27	40	..	„ 3·50	2000	..	„ „ ..	25	1710	7·43	3·93	
19	46. Nov. 15, 1864	Mixed, 20 „	23	217	23	75	..	Level ..	1000	+ 9	Contrary wind, rain	51	1300	5·95	5·95	Double traction.
20	46. Nov. 15, 1864	„ 20 „	22	217	23	75	..	Incline 0·10	1000	+ 9	„ „	47	1220	5·62	5·72	„ „
21	46. Nov. 15, 1864	„ 20 „	7	217	23	75	..	Level ..	1000	+ 9	„ „	42	1300	5·98	5·98	„ „
22	46. Nov. 15, 1864	„ 20 „	4	217	23	75	..	Incline 3·50	2000	+ 9	„ „	38	1405	7·24	3·74	„ „
23	46. Nov. 17, 1864	„ 20 „	53	172	19	0	..	„ 0·09	1000	+11	„ „	36	980	5·69	5·78	
24	46. Nov. 17, 1864	„ 20 „	8	172	19	0	..	Level ..	1500	+11	„ „	42	975	5·66	5·66	
25	46. Nov. 17, 1864	„ 20 „	4	172	19	0	..	Incline 3·50	2000	+11	„ „	27	1240	8·26	4·76	
26	46. Nov. 19, 1864	„ 20 „	22	120	14	0	..	„ 0·08	1000	+ 5	Fair	44	660	5·10	5·18	
27	46. Nov. 19, 1864	„ 20 „	22	120	14	0	..	„ 0·10	1000	+ 5	„	52	600	5·00	5·10	
28	46. Nov. 19, 1864	„ 20 „	15	120	14	0	..	„ 0·32	1000	+ 5	„	49	715	5·96	5·64	
29	46. Nov. 19, 1864	„ 20 „	5	120	14	0	..	„ 3·50	2000	+ 5	„	41	706	7·16	3·69	
			451													

TABLE G.—EXPERIMENTS ON THE RESISTANCE OF PASSENGER TRAINS.

No.	Designation of Train.	Type of Engine, and Adhesive Weight.	Distance experimented over in kilomètres.	Gross Weight of Train.	No. of Carriages.	Proportional No. of Carriages lubricated with Oil.	Nature of the Line.	Minimum Radius of Curves.	State of the Atmosphere.	Temperature.	Speed an hour.	Force of Traction.	Force absolute		Force corrected		Observations.
													a carriage.	a ton.	a carriage.	a ton.	
				tons.		per 100.	mills.	mètres.		°	kiloms.	kilogs.	kilogs.	kilogs.	kilogs.	kilogs.	
1	118. April 8, 1862	Mixed, 20 tons ..	4	48	8	..	Incline 9·00	1000	Slight wind ..	+15	41	850	102	17·03	48	8·03	
2	115. April 8, 1862	„ 20 „ ..	6	48	8	..	„ 9·25	800	„ „ ..	+13	43	940	116	19·41	61	10·16	
3	120. April 9, 1862	„ 20 „ ..	5	47	8	..	„ 9·00	1000	„ „ ..	+15	52	753	104	17·68	51	8·68	
4	119. April 9, 1862	„ 20 „ ..	7	47	8	..	„ 9·25	800	„ „ ..	+15	38	785	98	16·70	44	7·45	
5	120. April 10, 1862	„ 20 „ ..	5	48	8	..	„ 9·00	1000	Fair	+15	49	666	86	14·43	32	5·43	
6	119. April 10, 1862	„ 20 „ ..	7	50	8	..	„ 9·25	800	„	+15	48	803	100	16·12	43	6·87	
7	122. April 12, 1862	„ 20 „ ..	5	49	8	..	„ 9·00	1000	„	+15	48	722	88	14·38	33	5·38	
8	35. April 27, 1862	„ 20 „ ..	6	90	14	..	„ 0·06	1000	„	+14	54	596	44	6·89	44	5·95	
9	35. April 27, 1862	„ 20 „ ..	37	90	14	..	„ 0·10	1000	„	+14	47	596	40	6·34	40	6·24	
10	36. April 30, 1862	„ 20 „ ..	7	91	15	..	Level ..	1000	Slight wind ..	..	58	750	49	8·03	49	8·03	
11	36. April 30, 1862	„ 20 „ ..	25	91	15	..	Incline 0·10	1000	„ „ ..	..	50	703	44	7·16	44	7·26	
12	35. May 1, 1862	„ 20 „ ..	6	101	16	..	Level ..	1200	„ „ ..	..	55	755	43	6·84	43	6·84	
13	35. May 1, 1862	„ 20 „ ..	13	101	16	..	„ ..	1000	„ „ ..	..	48	610	37	5·83	37	5·83	
14	35. May 1, 1862	„ 20 „ ..	7	101	16	..	Incline 0·17	1000	„ „ ..	..	52	646	40	6·40	39	6·23	
15	36. May 6, 1862	„ 20 „ ..	5	101	17	..	„ 0·08	1000	„ „ ..	..	45	620	32	5·29	32	5·37	
16	36. May 6, 1862	„ 20 „ ..	10	101	17	..	Level ..	1000	„ „ ..	..	54	637	35	6·03	35	6·03	
17	36. May 6, 1862	„ 20 „ ..	16	101	17	..	„ ..	1000	„ „ ..	..	49	650	34	5·74	35	5·92	
18	36. May 6, 1862	„ 20 „ ..	10	101	17	..	Incline 0·66	1000	„ „ ..	..	42	603	31	5·95	31	5·29	
19	36. May 6, 1862	„ 20 „ ..	5	101	17	..	„ 2·87	2000	„ „ ..	..	37	740	43	7·29	26	4·42	
20	35. May 7, 1862	„ 20 „ ..	37	106	16	..	„ 0·03	1000	Fair	+17	50	723	44	6·74	44	6·71	Double traction.
21	35. May 7, 1862	„ 20 „ ..	6	106	16	..	„ 0·30	2000	„	+17	41	613	42	6·42	40	6·12	„ „
22	36. Dec. 10, 1862	„ 20 „ ..	11	116	20	..	„ 0·30	1000	Strong wind, rain	+ 7	43	1050	52	9·05	54	9·35	
23	36. Dec. 10, 1862	„ 20 „ ..	11	116	20	..	„ 0·20	1000	„ „ „	+ 7	52	943	47	8·13	48	8·33	
24	36. Dec. 10, 1862	„ 20 „ ..	23	116	20	..	Level ..	1000	„ „ „	+ 7	45	1167	58	10·06	58	10·06	
25	36. Dec. 10, 1862	„ 20 „ ..	17	116	20	..	„ ..	1000	„ „ „	+ 7	49	960	48	8·27	48	8·27	
26	36. Dec. 10, 1862	„ 20 „ ..	6	116	20	..	Incline 3·50	2000	.. ..	+ 7	46	1147	57	9·88	37	6·38	
27	17. April 11, 1862	„ 19 „ ..	3	..	10	..	„ 3·50	1000	.. ..	+15	39	690	69	..	..	..	
28	17. April 11, 1864	„ 19 „ ..	2	..	10	..	„ 5·00	Straight	.. ..	+15	30	682	68	..	..	..	
29	34. April 27, 1864	„ 20 „ ..	12	63	11	..	Level ..	1000	Fair	+13	43	438	39	6·78	39	6·78	
30	34. April 27, 1864	„ 20 „ ..	9	63	11	..	Incline 0·20	1000	„	+13	49	450	41	7·15	42	7·35	
31	34. April 27, 1864	„ 20 „ ..	3	63	11	..	„ 3·50	Straight	„	+13	41	620	56	9·84	36	6·34	
32	35. Nov. 17, 1864	„ 20 „ ..	26	82	14	..	Level ..	1000	Slight wind ..	+ 8	53	750	50	8·59	50	8·59	
33	35. Nov. 17, 1864	„ 20 „ ..	2	82	14	..	Incline 3·50	1000	„ „ ..	+ 8	36	970	65	11·25	45	7·75	
34	35. Nov. 17, 1864	„ 20 „ ..	3	82	14	..	„ 5·00	Straight	„ „ ..	+ 8	35	1110	76	13·10	47	8·10	
35	35. Nov. 19, 1864	„ 20 „ ..	2	98	17	..	„ 3·50	1000	Fair	+ 8	44	1070	55	9·72	35	6·22	Double traction.
36	35. Nov. 19, 1864	„ 20 „ ..	3	98	17	..	„ 5·00	Straight	„	+ 8	34	1240	72	12·65	43	7·65	„ „
37	35. Nov. 19, 1864	„ 20 „ ..	13	98	17	..	„ 0·08	1000	„	+ 8	53	776	42	7·43	42	7·51	„ „
	Carried forward		375														

TABLE H.—EXPERIMENTS ON THE RESISTANCE OF PASSENGER TRAINS.

No.	Designation of Train.	Type of Engine, and Adhesive Weight.	Distance experimented over in kilomètres.	Gross Weight of Train.	No. of Carriages.	Proportional No. of Carriages lubricated with Oil.	Nature of the Line.	Minimum Radius of Curves.	State of the Atmosphere.	Temperature.	Speed an hour.	Force of Traction.	Force absolute: a carriage.	Force absolute: a ton.	Force corrected: a carriage.	Force corrected: a ton.	Observations.
	Brought forward		375	tons.		per 100.	mills.	mètres.		°	kiloms.	kilogs.	kilogs.	kilogs.	kilogs.	kilogs.	
38	35. Nov. 19, 1864	Mixed, 20 tons ..	6	98	17	..	Incline 0·39	1400	Fair	+ 8	45	895	42	7·42	40	7·03	Double traction.
39	35. Nov. 19, 1864	„ 20 „ ..	5	98	17	..	Level ..	1000	„	+ 8	59	860	45	7·95	45	7·95	„ „
40	31. Nov. 21, 1864	„ 20 „ ..	5	..	18	..	Incline 1·80	2000	Damp	+ 8	44	920	51	..	..	..	
41	31. Nov. 21, 1864	„ 20 „ ..	4	..	18	..	Level ..	2000	„	+ 8	49	870	48	..	..	..	
42	31. Nov. 21, 1864	„ 20 „ ..	3	..	18	..	Incline 3·50	1000	„	+ 8	37	1130	62	..	..	..	
43	31. Nov. 21, 1864	„ 20 „ ..	15	..	18	..	Level ..	1000	„	+ 8	58	1010	56	..	..	..	Double traction.
44	31. May 4, 1865	„ 20 „ ..	12	70	12	8	Incline 0·40	1500	Slight wind ..	+27	57	770	56	10·11	53	9·71	
45	31. May 4, 1865	„ 19 „ ..	6	70	12	8	„ 0·40	1000	„ „ ..	+27	54	673	53	9·61	51	9·21	
46	31. May 4, 1865	„ 19 „ ..	7	70	12	8	„ 0·70	1500	„ „ ..	+27	47	590	43	8·43	39	7·73	
47	31. May 4, 1865	„ 19 „ ..	10	70	12	8	„ 1·60	Straight	„ „ ..	+27	52	799	62	11·37	49	9·77	
48	31. May 4, 1865	„ 19 „ ..	10	70	12	8	„ 2·90	1000	„ „ ..	+27	50	770	62	11·25	46	8·35	
49	31. May 4, 1865	„ 19 „ ..	9	70	12	8	„ 8·00	1000	„ „ ..	+27	43	963	76	13·80	32	5·80	
50	2 16. July 20, 1865	„ 20 „ ..	5	78	12	..	„ 6·00	700	Fair	+20	37	985	78	11·97	39	5·97	
51	2·16. July 20, 1865	„ 20 „ ..	6	78	12	..	„ 5·33	1000	„	+20	52	958	76	11·64	41	6·31	
52	1·43. July 19, 1865	Free wheels, 9800k	8	64	10	10	„ 9·25	800	„	+17	29	835	83	13·00	24	3·75	
53	2·43. July 19, 1865	Mixed, 20 tons ..	3	..	13	..	„ 5·50	800	„	+17	36	970	74	..	..	..	
54	2·43. July 19, 1865	„ 20 „ ..	5	..	13	..	„ 3·00	800	„	+17	45	860	66	..	..	..	
55	2·16. July 21, 1865	„ 20 „ ..	11	97	15	7	„ 5·63	800	Wind, rain ..	+20	35	1145	76	11·68	39	6·05	
56	2·43. July 21, 1865	„ 20 „ ..	3	77	13	15	„ 5·50	800	Slight wind ..	+20	37	906	67	11·43	35	5·93	
57	2·43. July 21, 1865	„ 20 „ ..	5	77	13	15	„ 5·50	1500	„ „ ..	+20	44	1000	74	12·57	42	7·07	
58	2·43. July 21, 1865	„ 20 „ ..	4	77	13	15	„ 3·00	800	„ „ ..	+20	42	766	59	9·92	41	6·92	
59	1·38. July 21, 1865	Free wheels, 9800k	3	40	7	..	„ 9·00	2000	Fair	..	44	685	94	16·62	43	7·62	
60	31. Dec. 21, 1865	Mixed, 20 tons ..	7	65	12	..	„ 0·40	Straight	„	+ 5	55	790	66	12·20	64	11·80	
61	31. Dec. 21, 1865	„ 20 „ ..	6	65	12	..	„ 0·40	1500	„	+ 5	56	810	67	12·45	65	12·05	
62	31. Dec. 21, 1865	„ 19 „ ..	17	77	15	..	„ 0·65	1000	„	+ 5	48	920	60	12·05	62	11·40	
63	31. Dec. 21, 1865	„ 19 „ ..	3	73	14	..	„ 3·90	Straight	„	+ 5	53	940	70	12·90	49	9·00	
64	31. Dec. 21, 1865	„ 19 „ ..	7	73	14	..	„ 8·00	1000	„	+ 5	43	1310	97	18·00	54	10·00	
65	32. Mar. 12, 1866	„ 19 „ ..	39	99	12	33	„ 0·08	1000	Slight wind ..	+ 8	45	770	60	9·10	60	9·18	
66	32. Mar. 12, 1866	„ 19 „ ..	27	79	12	33	„ 0·82	1000	„ „ ..	+ 8	51	876	68	10·37	63	9·55	
67	33. Mar. 13, 1866	Crampton	45	52	8	..	„ 0·03	1000	„ „ ..	+ 6	77	907	112	17·25	112	17·28	Express.
68	33. Mar. 13, 1866	„	46	52	8	..	„ 0·05	1000	„ „ ..	+ 6	66	915	112	17·34	112	17·29	„
69	32. Mar. 13, 1866	Mixed, 20 tons ..	56	88	14	28	„ 0·14	1000	„ „ ..	+ 7	48	760	51	8·86	51	8·22	
70	33. Mar. 14, 1866	Crampton	55	53	8	..	Level ..	1000	Calm, dry ..	+ 2	76	767	96	14·35	96	14·55	Express
71	33. Mar. 14, 1866	„	40	53	8	..	Incline 0·12	1000	„ „ ..	+ 2	66	765	94	14·41	94	14·29	„
72	32. Mar. 14, 1866	Mixed, 20 tons ..	15	78	12	25	„ 0·16	1000	Slight wind ..	+ 6	46	784	63	9·57	63	9·73	
73	32. Mar. 14, 1866	„ 20 „ ..	27	78	12	25	„ 0·14	1000	„ „ ..	+ 6	52	730	56	8·86	56	8·72	
74	32. Mar. 14, 1866	„ 20 „ ..	8	78	12	25	„ 0·35	2000	„ „ ..	+ 6	46	664	53	8·45	53	8·10	
	Carried forward		918														

Table I.—Experiments on the Resistance of Passenger Trains.

No.	Designation of Train.	Type of Engine, and Adhesive Weight.	Distance experimented over in kilomètres.	Gross Weight of Train.	No. of Carriages.	Proportional No. of Carriages lubricated with Oil.	Nature of the Line.	Minimum Radius of Curves.	State of the Atmosphere.	Temperature.	Speed an hour.	Force of Traction.	Force absolute		Force corrected		Observations.
													a carriage.	a ton.	a carriage.	a ton.	
	Brought forward		918	tons.		per 100.	mills.	mètres.		°	kiloms.	kilogs.	kilogs.	kilogs.	kilogs.	kilogs.	
75	33. Mar. 15, 1866	Crampton	64	52	8	..	Incline 0·04	1000	Slight wind ..	+ 2	74	1063	131	20·24	131	20·28	The same carriages as with the train 33 of March 13. Express.
76	33. Mar. 15, 1866	„	36	52	8	..	„ 0·13	1000	„ „ ..	+ 2	67	970	120	18·47	119	18·34	
77	32. Mar. 15, 1866	Mixed, 20 tons	3	72	12	25	„ 0·20	Straight	„ „ ..	+ 8	55	850	70	11·70	71	11·90	
78	32. Mar. 15, 1866	„ 20 „	37	72	12	25	„ 0·10	1000	„ „ ..	+ 8	43	875	69	11·50	68	11·40	
79	32. Mar. 15, 1866	„ 20 „	6	72	12	25	„ 0·77	2000	„ „ ..	+ 8	52	770	64	10·60	59	9·83	The same carriages as with the train 33 of March 14. Express.
80	33. Mar. 16, 1866	.. ..	13	53	8	..	„ 0·50	1000	„ „ ..	+ 8	64	750	93	14·10	90	13·60	
81	40·35. Apr. 24, 1866	Mixed, 22 „	3	70	12	16	„ 5·68	1200	Dry wind ..	+17	44	1120	85	14·68	52	9·00	
82	40·35. Apr. 24, 1866	„ 22 „	16	70	12	16	„ 1·62	1000	„ „ ..	+17	45	1007	80	16·83	71	12·21	
83	40·35. Apr. 24, 1866	„ 22 „	22	66	11	16	„ 1·15	800	„ „ ..	+17	46	905	83	13·78	76	12·63	
84	40·35. Apr. 24, 1866	„ 22 „	7	50	8	25	„ 2·66	Straight	Calm, dry ..	+17	45	505	60	10·10	45	7·44	
85	40·35. Apr. 24, 1866	„ 22 „	5	50	8	25	„ 2·62	2000	„ „ ..	+17	65	618	74	12·42	58	9·80	
86	40·35. Apr. 24, 1866	„ 22 „	15	50	8	25	„ 4·34	2000	„ „ ..	+17	50	610	73	12·21	47	7·87	
87	40·32. Apr. 25, 1866	Free wheels, 11 „	5	55	9	33	„ 4·05	1600	„ „ ..	+15	46	715	73	12·06	49	8·01	
88	40·32. Apr. 25, 1866	„ 11 „	3	55	9	33	Level ..	1000	„ „ ..	+15	60	510	55	9·10	55	9·10	
89	40·32. Apr. 25, 1866	Mixed, 22 „	12	77	12	25	Incline 0·75	800	„ „ ..	+15	43	566	41	6·40	46	7·15	
90	40·32. Apr. 25, 1866	„ 22 „	6	77	12	25	„ 5·40	1000	„ „ ..	+15	35	852	71	11·06	36	5·66	
91	40·32. Apr. 25, 1866	„ 22 „	3	77	12	25	„ 2·70	Straight	„ „ ..	+15	44	602	50	7·78	32	5·08	
92	40·32. Apr. 25, 1866	„ 22 „	5	70	11	25	„ 0·20	1000	„ „ ..	+15	44	517	45	7·02	46	7·22	
93	40·32. Apr. 25, 1866	„ 22 „	3	70	11	25	„ 2·28	2000	„ „ ..	+15	44	610	50	7·87	36	5·59	
94	40·35. Apr. 26, 1866	„ 22 „	8	87	14	43	„ 4·69	1600	„ „ ..	..	36	1052	35	12·12	46	7·43	
95	40·35. Apr. 26, 1866	„ 22 „	15	87	14	43	„ 1·51	1000	„ „ ..	..	46	926	63	10·20	54	8·69	
96	40·35. Apr. 26, 1866	„ 22 „	9	76	12	50	„ 0·40	800	„ „ ..	+26	50	793	56	8·96	54	8·56	
97	40·35. Apr. 26, 1866	„ 22 „	6	76	12	50	„ 1·49	1000	„ „ ..	+26	59	776	64	10·20	55	8·71	
98	40·35. Apr. 26, 1866	Free wheels, 11 „	11	56	9	44	„ 3·06	Straight	„ „ ..	+26	47	587	65	10·50	46	7·44	
99	40·35. Apr. 26, 1866	„ 11 „	4	56	9	44	„ 0·23	„	„ „ ..	+26	56	627	69	11·20	68	10·97	
100	40·35. Apr. 26, 1866	„ 11 „	4	56	9	44	„ 6·00	2000	„ „ ..	+26	39	755	76	12·40	40	6·40	
101	40·35. Apr. 26, 1866	„ 11 „	3	56	9	44	„ 2·00	2000	„ „ ..	+20	41	590	57	9·27	45	7·27	
102	40·35. Apr. 26, 1866	„ 11 „	14	56	9	44	„ 5·14	2000	„ „ ..	+17	51	690	76	12·32	44	7·18	
103	40·34. Aug. 27, 1866	Mixed, 22 „	6	81	14	20	„ 6·00	1500	„ „ ..	+26	48	995	72	12·51	38	6·51	
104	40·23. Aug. 28, 1866	„ 20 „	4	101	17	30	„ 2·00	1000	Dry, slight wind	+24	46	900	56	9·43	44	7·43	
105	40·23. Aug. 28, 1866	„ 20 „	5	101	17	30	„ 5·00	1000	„ „ „	+24	33	1320	77	12·77	47	7·77	
106	40·23. Aug. 28, 1866	„ 20 „	4	101	17	30	„ 4·70	1200	„ „ „	+24	47	1400	71	11·95	43	7·25	
107	40·23. Aug. 28, 1866	„ 20 „	3	101	17	30	Level ..	1000	„ „ „	+24	52	852	39	6·54	39	6·54	
108	41·26. Aug. 28, 1866	„ 20 „	2	67	11	..	Incline 6·93	..	„ „ „	+20	38	907	89	13·50	43	6·57	
109	40·26. Aug. 28, 1866	„ 20 „	3	101	17	30	Level ..	1000	„ „ „	+20	44	885	45	7·52	45	7·52	Same carriages as to train 40/23.
110	40·26. Aug. 28, 1866	„ 20 „	2	101	17	30	Incline 2·42	2000	„ „ „	+20	44	1122	53	8·85	99	6·43	
111	35. June 4, 1866	„ 20 „	6	105	17	..	„ 0·20	2000	Calm, rain ..	+19	61	670	51	8·29	50	8·09	
112	35. June 4, 1866	„ 20 „	3	105	17	..	„ 3·50	1000	„ „ ..	+19	44	1270	71	11·47	49	7·97	
	Carried forward		1294														

Table J.—Experiments on the Resistance of Passenger Trains.

No.	Designation of Train.	Type of Engine, and Adhesive Weight.	Distance experimented over in kilomètres.	Gross Weight of Train.	No. of Carriages.	Proportional No. of Carriages lubricated with Oil.	Nature of the Line.	Minimum Radius of Curves.	State of the Atmosphere.	Temperature.	Speed an hour.	Force of Traction.	Force absolute		Force corrected		Observations.
													a carriage.	a ton.	a carriage.	a ton.	
	Brought forward		1294	tons.		per 100.	mills.	mètres.		°	kiloms.	kilogs.	kilogs.	kilogs.	kilogs.	kilogs.	
113	35. June 4, 1866	Mixed, 20 tons ..	3	105	17	..	Incline 5·00	800	Calm, rain ..	+19	38	1340	74	12·00	43	7·10	
114	35. June 4, 1866	„ 20 „ ..	21	105	17	..	„ 0·17	1000	„ „ ..	+19	53	852	43	6·91	42	6·74	
115	35. June 4, 1866	„ 20 „ ..	6	105	17	..	„ 0·22	1000	„ „ ..	+19	57	890	47	7·60	48	7·82	
116	35. June 4, 1866	„ 20 „ ..	5	105	17	..	„ 0·24	Straight	„ „ ..	+19	63	973	52	8·40	50	8·16	
117	1·35. June 4, 1866	Free wheels, 9800k	4	45	8	..	„ 9·25	800	Calm, damp ..	+20	37	817	101	18·00	49	8·75	
118	2·13. June 5, 1866	Mixed, 20 tons ..	9	49	9	11	„ 5·50	800	Calm, dry ..	+20	31	585	64	11·83	34	6·33	
119	2·13. June 5, 1866	„ 20 „ ..	8	49	9	11	„ 10·00	1000	„ „ ..	+20	29	750	86	15·42	30	5·42	
120	2·16. June 5, 1866	„ 20 „ ..	2	61	10	10	„ 3·00	1000	„ „ ..	+23	46	760	61	10·11	43	7·11	
121	2·16. June 5, 1866	„ 20 „ ..	5	61	10	10	„ 2·00	1000	„ „ ..	+23	61	822	72	11·80	60	9·80	
122	2·16. June 5, 1866	„ 20 „ ..	4	61	10	10	„ 3·40	1000	„ „ ..	+23	56	710	71	11·60	50	8·20	
123	2·16. June 5, 1866	„ 20 „ ..	4	61	10	10	„ 5·80	700	„ „ ..	+23	46	873	80	13·23	45	7·43	
124	2·16. June 5, 1866	„ 20 „ ..	6	61	10	10	„ 5·20	1000	„ „ ..	+23	57	867	83	13·64	51	8·44	
125	2·43. June 6, 1866	„ 20 „ ..	11	68	11	9	„ 5·50	800	„ „ ..	+18	33	949	74	13·50	50	8·06	
126	2·43. June 6, 1866	„ 20 „ ..	8	68	11	9	„ 10·00	1000	„ „ ..	+18	37	1087	98	15·77	36	5·77	
127	2·16. June 6, 1866	„ 20 „ ..	14	58	10	30	„ 2·63	1000	„ „ ..	+23	46	623	59	10·19	44	7·56	
128	2·16. June 6, 1866	„ 20 „ ..	13	58	10	30	„ 5·63	700	„ „ ..	+23	39	743	71	12·32	39	6·69	
129	2·43. June 7, 1866	„ 20 „ ..	10	64	11	27	„ 5·50	800	„ „ ..	+20	41	812	67	11·60	36	6·18	
130	2·43. June 7, 1866	„ 20 „ ..	5	64	11	27	„ 3·00	800	„ „ ..	+20	46	724	60	10·40	43	7·40	
131	2·43. June 7, 1866	„ 20 „ ..	10	64	11	27	„ 10·00	1000	„ „ ..	+20	37	1067	94	6·61	36	6·19	
132	2·16. June 7, 1866	„ 20 „ ..	4	62	10	30	„ 2·00	1000	„ „ ..	+27	51	636	63	8·59	41	6·59	
133	2·16. June 7, 1866	„ 20 „ ..	16	62	10	30	„ 5·03	700	„ „ ..	+27	45	697	66	10·65	35	5·62	
134	1·16. June 7, 1866	Free wheels, 9800k	6	53	10	10	„ 9·00	1000	„ „ ..	+25	42	850	85	16·10	38	7·10	
135	44. June 8, 1866	Mixed, 20 tons ..	10	107	17	17	„ 0·18	1000	„ „ ..	+25	46	627	37	5·85	38	6·03	
136	44. June 8, 1866	„ 20 „ ..	5	107	17	17	„ 0·40	1400	„ „ ..	+25	44	547	32	5·08	34	5·48	
137	44. June 8, 1866	„ 20 „ ..	28	107	17	17	Level ..	1000	„ „ ..	+25	46	588	36	5·67	36	5·67	
138	44. June 8, 1866	„ 20 „ ..	16	107	17	17	„ ..	1000	„ „ ..	+25	45	672	39	6·27	39	6·27	
139	44. June 8, 1866	„ 20 „ ..	6	107	17	17	Incline 2·80	2000	„ „ ..	+25	46	830	53	8·46	35	5·66	
140	9. Aug. 3, 1866	„ 20 „ ..	11	77	13	45	Level ..	1000	Dry, slight wind	+20	45	645	46	7·73	46	7·73	
141	9. Aug. 3, 1866	„ 20 „ ..	2	77	13	45	Incline 3·50	1000	„ „ „	+20	30	732	49	8·13	28	4·63	
142	9. Aug. 3, 1866	„ 20 „ ..	2	77	13	45	„ 5·00	800	„ „ „	+20	24	635	53	8·94	21	3·94	
143	9. Aug. 3, 1866	„ 20 „ ..	3	77	13	45	Level ..	1500	„ „ „	+20	40	600	46	7·78	46	7·78	
144	9. Aug. 3, 1866	„ 20 „ ..	14	77	13	45	Incline 0·14	1000	„ „ „	+20	47	700	52	8·76	53	8·90	
145	20. Aug. 3, 1866	„ 20 „ ..	16	73	12	42	Level ..	1000	„ „ „	+24	45	796	61	10·19	61	10·19	
146	20. Aug. 3, 1866	„ 20 „ ..	5	73	12	42	„ ..	1000	„ „ „	+24	51	785	62	10·42	62	10·42	
147	20. Aug. 3, 1866	„ 20 „ ..	4	73	12	42	Incline 0·20	1000	„ „ „	+24	34	784	64	10·75	65	10·95	
148	20. Aug. 3, 1866	„ 20 „ ..	4	73	12	42	„ 0·33	Straight	„ „ „	+34	51	780	62	10·37	64	10·70	
149	1·36. Feb. 4, 1867	Free wheels, 9800k	3	30	5	20	„ 9·00	1000	Wind and rain ..	..	40	620	124	20·39	68	11·39	Through a tunnel.
150	1·36. Feb. 4, 1867	„ „	4	30	5	20	„ 5·00	Straight	Wind	..	45	544	91	16·23	67	11·23	
	Total distance		1360														

Note K.—Composition of the Grease in use on the Eastern Railway (of France).—The experiments to which we have referred when considering friction in a grease-box, were made with the grease and oil now used on the Eastern Railway. The grease is composed as follows;—

Winter grease	White tallow	0·123
	Grey tallow	0·123
	Palm oil	0·123
	Old grease	0·123
	Pure water	0·388
	Lye	0·120
		1·000
Summer grease	White tallow	0·22
	Grey tallow	0·22
	Pure water	0·41
	Lye	0·15
		1·00

For oil-boxes, unpurified colza oil is used.

It will be seen from the above, that the lubricating substance employed was only of ordinary quality. By using better grease, coefficients may be obtained approaching nearer and nearer to those found for oil.

EARTHWORK. Fr., *Terrassement;* Ger., *Erdbau; Erdschüttung;* Ital., *Lavori di terra;* Span., *Movimiento de tierras.*

See Embankment. Fortification. Railway Engineering.

ECCENTRIC. Fr., *Excentrique;* Ger., *Excentrik;* Ital., *Eccentrico;* Span *Escéntrico.*

See Cam. Details of Engines, p. 1196. Mechanical Movements.

EFFLUX CHAMBER. Fr., *Chambre d'écoulement; Écouloir;* Ger., *Auslauf; Ausmündung;* Span., *Cámarama de salida.*

The *efflux* and *influx* chambers (Brooklyn Water-works, U.S.), at Ridgewood, possess some points of novelty that deserve the attention of engineers.

The influent chamber is placed at the south end of the division embankment, and the effluent chamber at the north end of the same embankment. Each chamber is arranged to communicate with both compartments of the reservoir, or with either compartment at will. The distance between the two chambers is 1215 ft. The water, therefore, received into either compartment of the reservoir, from the influent chamber, has more than this distance to travel before reaching the chamber whence it is delivered to the city, and during its imperceptible progress, as regards velocity, between these two points, it has ample time to deposit any sediment with which it may have been charged. But as it very rarely happens that the water in the conduit or pump-well is affected in this way, it usually reaches the reservoir clear as spring water. For this character of water, two divisions in the reservoir would not have been necessary, as providing from one to the other for the intermittent retention necessary to subsidence, one compartment would have equally satisfied the necessities of the case as to that point; but the two are necessary as a means of cleaning and repairing the reservoir without drawing off more than half of its reserve of water.

The influent chamber is in length 28 ft., width 19 ft.; the bottom is situated 6 ft. below high water of the reservoir, and 4½ ft. below the centre of the mouth of the delivering pipes. From this pool, or chamber of water, an open passage communicates with the western division of the reservoir, and another with the eastern division. Either of these passages can be shut off by flash-boards, and the whole delivery, in that case, thrown into the opposite division. The water, flowing through these passages, falls, when the reservoir is low, into a shallow well of water, placed there to protect the paving of the slope from the wear of the falling water; thence it reaches the reservoir over a brick paving set on edge, laid in mortar, and resting on the heavy stonework of the foundations. A portion of the bottom of the reservoir is paved here, to defend the bottom when the water first touches it. This paving is of stone, laid in hydraulic mortar. These last details are not seen when the reservoir is full.

The masonry of the work consists of granite, carried up in courses, the face-stones being cut in bed and build, and dressed to the lines of the work. The whole is laid in hydraulic mortar, composed as already described. Figs. 2615 to 2619 give the details of the foundations and other particulars.

The influent chamber is large enough to receive the terminal pipes of four force-mains, being the number necessary to deliver the waters of four engines, each of 10,000,000 gallons daily capacity, covering, therefore, the 40,000,000 of supply contemplated in the design of these works, half of which supply is provided for.

The chamber shows but two delivery-pipes now, being the mouths of the force-mains in current use. These terminal pipes are carefully built into the masonry, the back of which, in contact with the earthen embankments, is carefully puddled all round, this puddle being connected with the puddle of the reservoir. A separate piece of masonry, situated at the foot of the exterior slope of the bank, holds and envelops the mains there also, and secures the pipes from any longitudinal motion within the reservoir grounds, and from the leakage which such motion might entail. An inspection of the sharp inclination upon which the force-main pipes are laid, below the reservoir, will show the risk of some such effect being produced there.

The *effluent chamber*, Figs. 2620 to 2624, is arranged so as to connect the city supply-mains with the water of either division of the reservoir, or with both, at convenience. Kirkwood's object was, in both chambers, to simplify as much as possible, the connection of the mains with the reservoir

2616.
East Wing Wall of East Inlet.

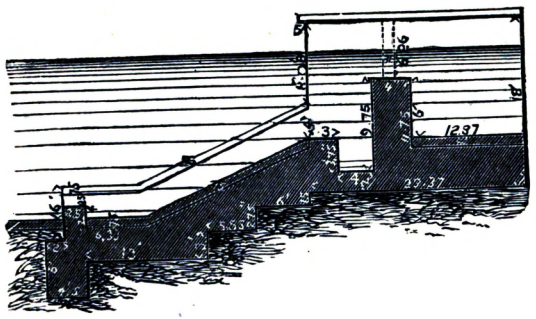

2615.

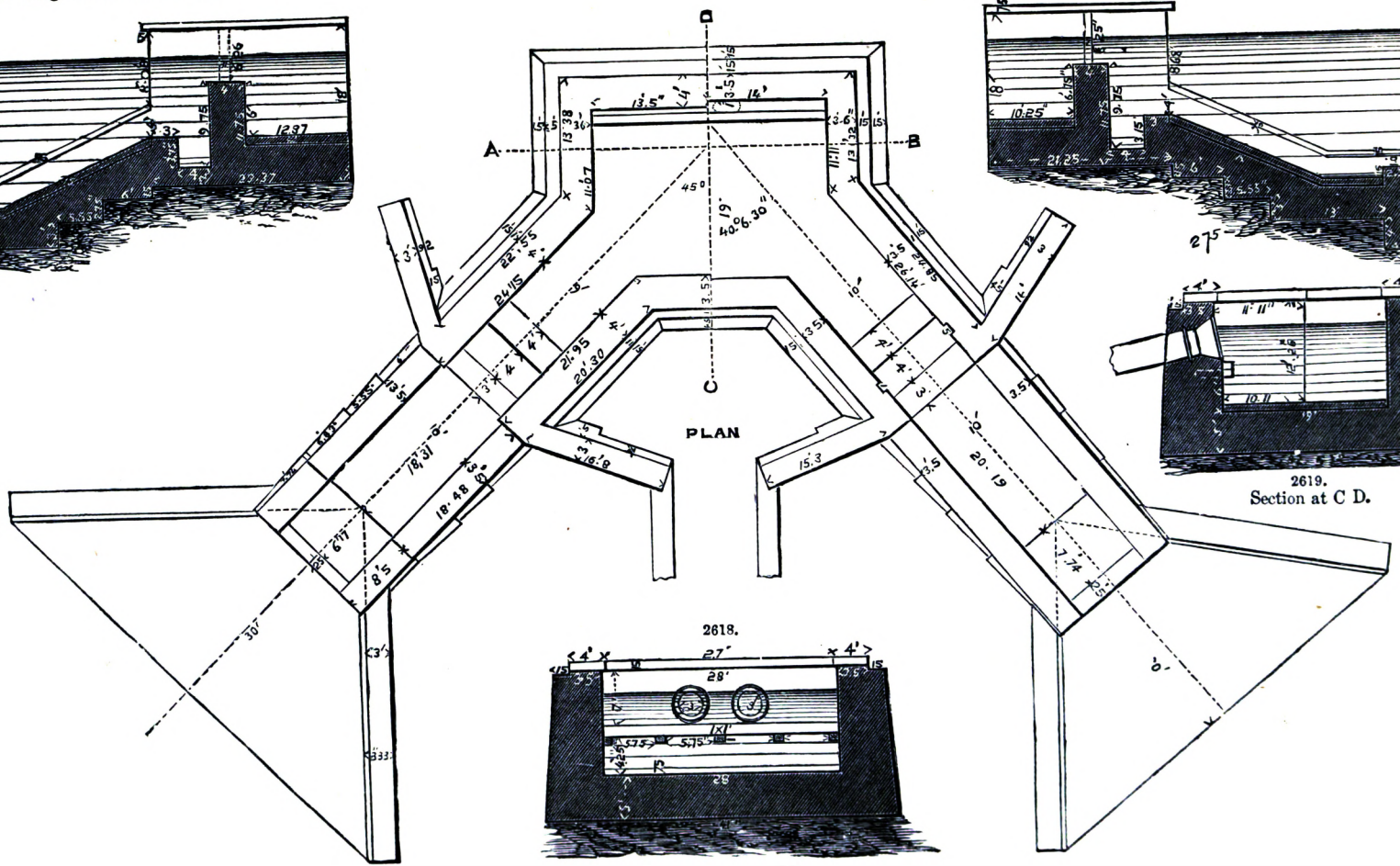

Section at A B.

2617.
West Wing Wall of East Inlet.

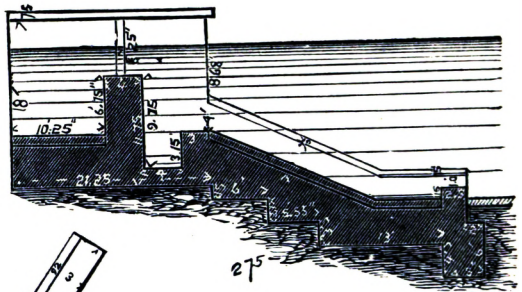

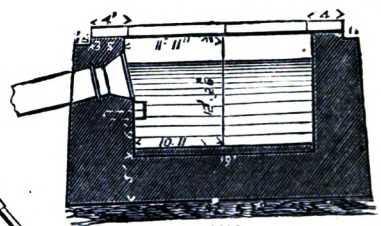

2619.
Section at C D.

2618.

2620

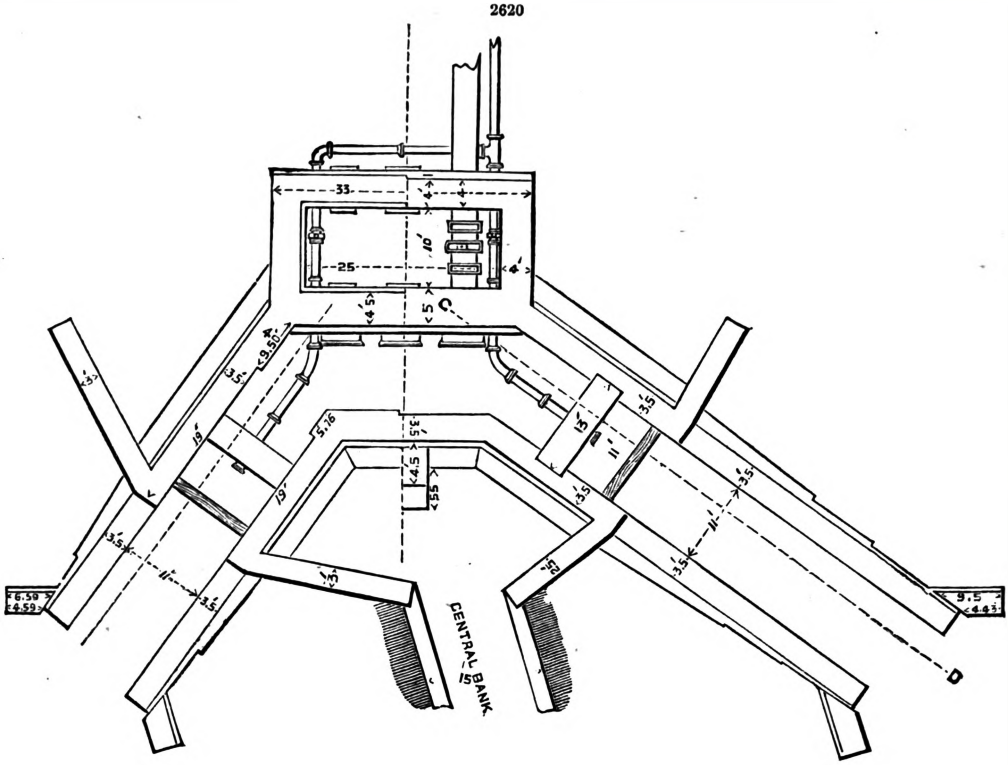

2621.

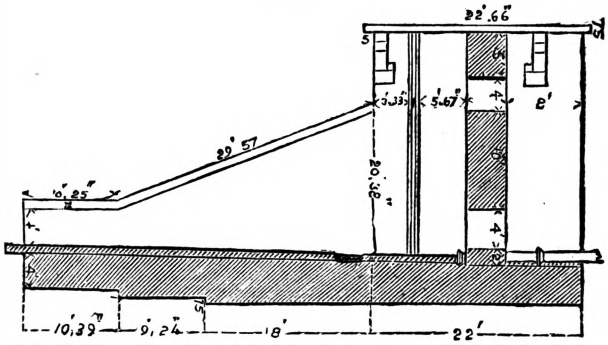

Section at D C.

2622.

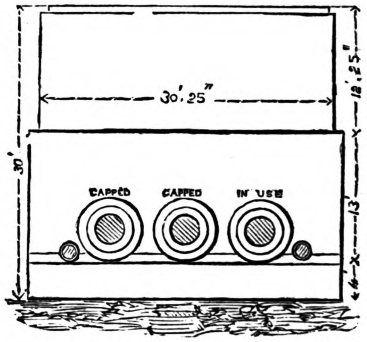

Elevation of Front Wall of Chamber.

2623.

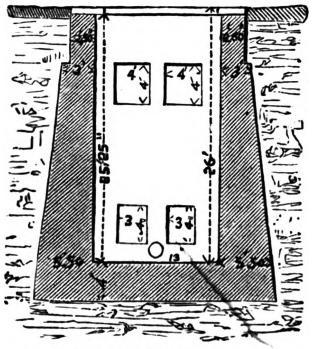

Section of Granite Pier.

2624.

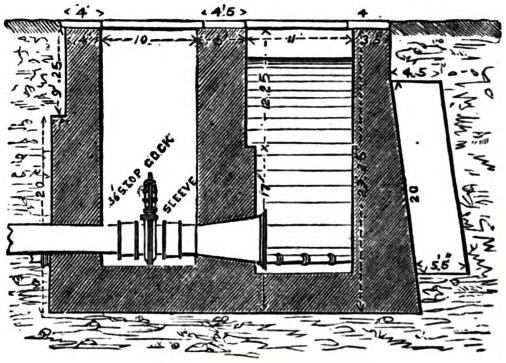

Section through Chambers.

compartments, and at the same time to make their pipes easily accessible for repairs, complicating as little as possible, under such circumstances, the reservoir works.

The water-space of the effluent chamber is connected, by passages 11 ft. wide, with the two divisions of the reservoir. A heavy granite wall is built across each passage, rising to the same level as the top of the reservoir banks. In each wall there are four openings, the two lower openings being 3 × 3 each, and the two upper openings 3 × 4 each. Iron sluices running in iron slides, faced with composition metal, cover and control these openings. From these sluices, iron rods of 2 in. diameter rise to the top of the work, where they terminate in screws and gearing for the movement of these sluices. The faces of these iron sluices are parallel;—it is evident now that they would have been tighter, had the sluices been wedge-shaped, like the sluice-gates of ordinary stop-cocks. The possibility of their getting fixed in that case, induced the engineers to have them made as they are.

In front of the sluices, towards the reservoir, in each passage, copper-wire screens are placed, 22 ft. in height, to prevent fish, leaves, &c., from passing into the effluent chamber, and so into the supply-pipes. As a further precaution, a screen of similar material defends the pipe-mouth.

Immediately behind the effluent chamber proper, but connected with it, there is a dry chamber, open to the surface, except as it is now covered by a movable iron roofing. The supply-mains pass through this dry chamber, and it is here that the stop-cocks of these mains and the stop-cocks of the waste-pipes are placed. Into the granite wall, 6 ft. thick, separating this chamber from the water chamber, the three mouth-pipes of the three pipe-mains, each of 36 in. diameter, are built in place. There is but one of these mains in use now, and but one large stop-cock in the chamber at present; the mouths of the other pipe-mains are for the present closed in front. Into the opposite wall of the stop-cock chamber, pieces of the same sized mains are built, in order that when a second or third main is required to be laid, it may not be necessary to break into any of the masonry. In the same chamber the stop-cocks of the waste-pipes are found. These waste-pipes are of 12 in. diameter, and communicate with each division of the reservoir, their stop-cocks being closed, except when, in the course of drawing the water off either division, the bottom is desired to be drained off thoroughly. This drainage water is carried by a 12-in. pipe to a pond hole on the opposite side of the turnpike road. The mouths of these drain-pipes are outside of the copper screens, as will be seen in Figs. 2620 to 2624.

The bottom of this chamber as well as of the effluent chamber proper, is paved with hard-burnt brick, set on edge, and laid in cement mortar. The masonry is of blue stone, finished with coursed granite, except the heavy foundations, which are of rubble-work. The whole work is laid in hydraulic cement mortar. The earthwork of the division embankments, where it connects with the masonry, was carefully rammed, and the puddle wall of the embankment was widened there, so as to cover the whole space between the buttresses. The puddle was enlarged in the same manner behind the walls of the influent chamber.

The apparatus for moving the sluices is protected by a small house built over each passage.

The paving of the reservoir slopes, where they meet the top lines of the banks, is finished by a dwarf wall, and blue stone coping, upon which there is placed a low iron fence.

ELECTRIC TELEGRAPH. Fr., *Télégraphe électrique;* Ger., *Electrische Telegraph;* Ital., *Telegrafo elettrico;* Span., *Telégrafo eléctrico.*

An *Electric Telegraph*, or *Electro-Magnetic Telegraph*, is a telegraph in which the operator at one station causes words or signs to be recorded or exhibited at another by means of a current of electricity, generated by a *battery*, and transmitted over an intervening wire. See Telegraphy.

ELECTRO-MAGNET. Fr., *Aimant-électrique;* Ger., *Electrischer Magnet;* Ital., *Calamita temporaria;* Span., *Iman eléctrico.*

See Boring and Blasting, p. 572.

ELECTRO-METALLURGY. Fr., *Électro-métallurgie;* Ger., *Electrometallurgie;* Ital., *Elettro-metallurgia;* Span., *Electrometalurgia.*

Electro-metallurgy is the art of depositing metals from solutions of their salts upon metallic surfaces by the action of voltaic electricity. The most extensively known of the many specific processes included under this generic name is that of electrotype, the use of which is;—

1st. To deposit upon a baser metal a thin, continuous, and adherent layer of a more precious and less oxidable metal; or,

2nd. To obtain a continuous layer of metal, but not adherent, and of sufficient thickness to allow of its being separated from the subjacent object of which it gives an exact copy. This is the real use of the electrotype, properly so called.

By those processes of the hydroplastic art which do not require the aid of electricity, only thin layers can be obtained, and the results are of the nature of those comprised in the first case mentioned above. These deposits are called *direct deposits*, or deposits by simple immersion; the most common being those of gold and silver. We cannot affirm that direct deposits are effected without the aid of electricity, for the presence of two different metals in the fluid produces a real galvanic battery. But we shall retain this name for those deposits which are effected without the assistance of a source of electricity external to the bath itself. There are, moreover, deposits called *deposits by double affinity*, which are produced by the contact of two metals in proper solutions. The most remarkable examples of these deposits are Roseleur's process of tinning and the process of coppering known as Weill's.

Cleaning.—Before we consider these different deposits, we must say a few words concerning the preparation of the metals by cleaning. This operation, or rather, this series of operations, is desired to remove from the surface of the objects every trace of foreign substances, previously to their being immersed in the bath. This preparation is of the highest importance, for if it is impossible to obtain a good deposit in a bad bath, it is no more possible to obtain in an excellent bath a good deposit upon a piece which has been imperfectly cleaned.

The mode of cleaning is not the same for all metals, and it may be *mechanical* or *chemical*. The

chemical process gives much more perfect results than the mechanical, but, unfortunately, it can be applied only to copper and its alloys. For all the other metals the chemical action may be employed to begin the cleaning, but in nearly all cases it must be finished mechanically.

Cleaning Copper and its Alloys.—The first thing to be done is to remove all greasy substances which accumulate on the surface of the metal, either during the processes of manufacture or from frequent contact with the hands. This result is obtained by two methods. The first consists in subjecting the metal to a temperature producing red heat; this method cannot be applied to objects which have soldered joints, nor to those whose fragility would render them liable to injury, nor again to those which are required to retain their rigidity and sonorousness. In these cases recourse is had to the second method, which consists in placing the objects for several minutes in a boiling solution of potash and soda.

When removed from this bath they are well rinsed and then placed in a mixture of from 5 to 20 parts of sulphuric acid 66° and 100 parts of water, where they are allowed to remain until the black layer of bioxide of copper is transformed into a reddish layer of protoxide of copper. They are afterwards attached to copper hooks of various shapes, according to the weight and nature of the articles, Figs. 2625 to 2627, or placed in a kind of strainer made of grit stone, Figs. 2628 to 2630,

2625.

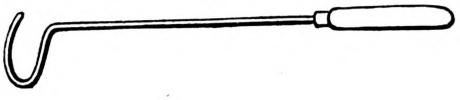

2626.

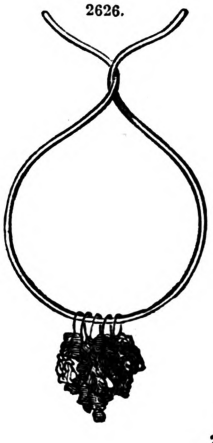

2627.

2628.

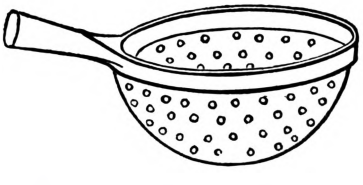

2629.

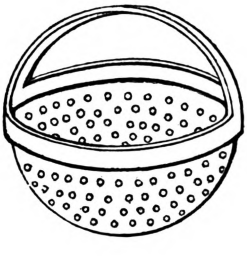

2630.

to enable the operator to shake them easily when passing them through the various acids, and which are;—

1st. *Weak aquafortis.* This is nitric acid (aquafortis) nearly exhausted by previous use. The objects are allowed to remain in it for several seconds. The advantages of employing weak aquafortis are, 1, a saving of new acids; and 2, a less violent action upon those light parts, certain portions of which are covered with oxide while the rest is metallic.

2nd. *Strong aquafortis.* This is composed of

Azotic acid 36°	10 litres.
Sea salt	100 grammes.
Calcined soot	100 „

The articles are placed in this for some seconds, then they are exposed to the air until the surface is covered with a kind of green froth; they are then plunged again into the strong aquafortis, after which they are well rinsed.

3rd. *Compounds for brightening the metal.* When taken out of the aquafortis, the articles have a bright and metallic appearance which seems to indicate a state of perfect cleanliness. It is not so, however, and if we attempt to gild by immersion an article just taken from the aquafortis, the operation will probably result in failure. The case will be otherwise, however, if we pass the article through a mixture of

Nitric acid 36°	10 litres.
Sulphuric acid 66°	10 „
Sea salt	100 grammes.

On being taken from this bath the article will have a bright and clean appearance, and the operation of cleansing will have been thoroughly performed.

If, instead of a bright surface, we require a dull one, the formula of the component acids will be modified as follows;—

Azotic acid 36°	20 litres.
Sulphuric acid 66°	10 „
Sea salt	100 grammes.
Sulphate of zinc	200 „

The articles must be left in this bath from one to ten minutes, according to the degree of dulness required, and this dulness, which will in all cases be too deep, must be lightened by passing the articles rapidly through the brightening compounds.

Another operation is often performed for the purpose of facilitating the adherence of the metal, and it consists in plunging rapidly the articles, after they have undergone the cleansing process, into the following solution;—

Water	10 litres.
Azotate of mercury	5 grammes.
Sulphuric acid	10 „

The above solution is suitable for gold. But the quantity of salt of mercury must be increased when thick deposits of silver are required, such as table-plate, for example.

The series of operations for the complete cleansing of copper and its alloys are, thus, the following;—

The removal of grease.
Bath of sulphuric acid.
Bath of weak aquafortis.
Bath of strong aquafortis.
Baths of acid compounds.
Bath of nitrate of mercury.

Between each of these operations a thorough rinsing is necessary.

Thus a series of pans, arranged as shown in Fig. 2631, are required, the rinsing beginning in the lowest and ending in the highest, which contains water free from acid.

2631.

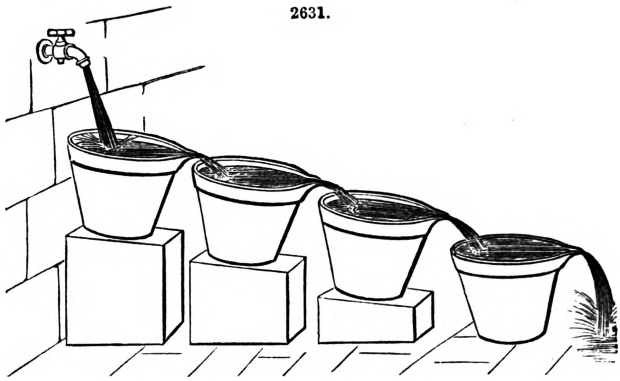

Fig. 2632 represents;—A, furnaces for heating the articles; B, pan for the sulphuric acid bath; C, pot of weak aquafortis; D, pot of strong aquafortis; E, pot of compounds for dulling the metal; F, pot of compounds for brightening the metal; G, azotate of bioxide of mercury.

2632.

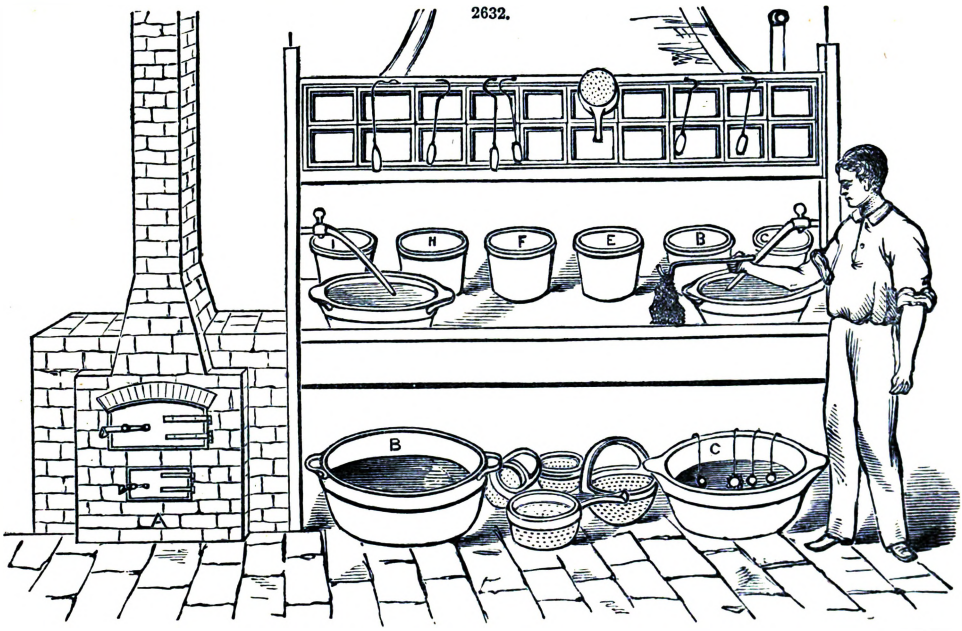

Cleansing by Mechanical Means.—The cleansing by this means is effected by the aid of revolving of hand brushes. Figs. 2636, 2637, represent hand-brushes made of fine brass wire. For very

delicate objects spun glass is used. The brush represented by Fig. 2638 is intended for large bronze articles. Figs. 2633 to 2635 show the manner in which these brushes are employed; they are also used to brighten dull deposits, previously to the operation of burnishing.

2633.

2634.

2635.

2636.

2637

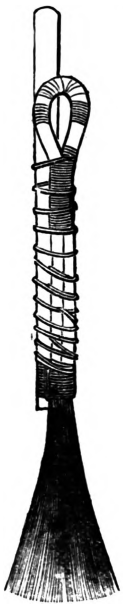

2638.

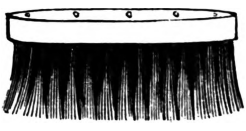

To Clean Silver, Zinc, Iron, &c.—We have already said that the cleansing of metals other than copper and its alloys is in nearly all cases effected by mechanical means. The following are the processes for the common metals;—

Silver is first heated either by placing it directly in the fire or by enclosing it first in iron boxes, and then plunged in sulphuric acid diluted with water. The cleansing is afterwards completed by brushing. Azotic instead of sulphuric acid is sometimes employed, but if the acid is not free from chlorine, chloride of silver will be formed on the surface of the object.

Zinc is cleaned without much difficulty when it is not joined with tin or lead. Unfortunately in practice zinc articles are nearly always soldered. In any case, however, the following process, which has hitherto been seldom employed, gives satisfactory results.

The grease being removed by a boiling solution of potash, the articles are passed rapidly through a liquid composed of

Sulphuric acid 66°	10 litres.
Azotic acid 36°	10 „
Sea salt	100 grammes.

This bath should be used exclusively for zinc, and should not contain salts of copper, which would be reduced by the zinc, thereby causing a blackened surface. The articles must be well rinsed and the cleaning completed by means of brushing.

Iron is cleansed by being immersed for several hours in a very weak solution of sulphuric acid in water—a hundredth of acid is enough—and then brushed with iron-wire or coarse short hair-brushes. Hydrochloric acid is sometimes used, but sulphuric acid is to be preferred, because it does not evaporate like hydrochloric acid. When the metal has been cleaned, it is kept in water slightly alkalized, if it is not required to place it at once in the bath.

Steel is cleaned in the same way as iron, but it requires to be left for a shorter time in the acidulated water.

Aluminium may be well cleansed in the following manner;—

1. A short immersion in caustic water;
2. An immersion of several minutes in pure nitric acid, which does not act upon the aluminium, but which destroys impurities on its surface;
3. A rapid passage through very weak fluorhydric acid;
4. A passage through liquid phosphoric acid.

If the aluminium is pure, the object, when taken out of the last bath, has a white and brilliant appearance.

Lead and tin cannot be cleaned by means of acids; recourse must, in these cases, be had to the brush and some fine powder, such as pounce.

Metallic Deposits obtained by Simple Immersion.—Metallic deposits by simple immersion may be considered as particular cases of the general law of the precipitation of metals by other metals more oxidable. The conditions to be fulfilled in the case we are considering are the following;—the precipitated metal should form on the surface of the precipitating metal a uniform, continuous, and adherent layer, possessing all the qualities peculiar to it, such as brilliancy, colour, hardness, unchangeableness, when exposed to the influence of atmospheric agents, &c.

It is seldom that the precipitation of metals can be effected with all these conditions without the aid of electricity. The general principle of direct deposits is this;—

If a metal be placed in a solution of another metal less oxidable, the more oxidable will substitute itself for the other metal in the solution, whilst the latter will be precipitated in a metallic state in equivalent atomic proportions.

Most commonly the metal is precipitated in a pulverulent state and has no adhesion with the subjacent metal. Sometimes, on the contrary, as in the cases of gilding and silvering by immersion, extremely adhesive deposits are obtained.

It seems reasonable to suppose that in all cases the effects produced are not due merely to chemical affinity, but that they result in part from the electric current caused by the contact of two metals in a liquid which exerts a chemical action upon them.

It follows from what we have said above that with direct deposits only very thin layers can be obtained, since the action must evidently cease when the whole surface of the oxidable metal is covered, there being then in reality only one metal in contact with the liquid. We shall have occasion later to notice an exception to this general rule in the case of silvering by the method of dipping with bisulphate of soda, but this does not weaken the theory of direct deposits.

The following is, according to M. Dumas, the Table of metallic salts reducible by other metals, and of those the solutions of which are not reducible by the metals;—

Salts, the Solutions of which are Irreducible by the Metals.	Salts, the Solutions of which are Reducible by certain Metals		
Manganese. Zinc. Iron. Chromium. Cobalt. Cerium. Uranite. Titanium. Nickel.	Tin. Antimony. Arsenic. Bismuth. Lead. Copper. Tellurium. Nitrate of Mercury	Reduced by iron, zinc, and all the above.	Reduced by iron, zinc, and perhaps manganese.
	Silver .. Palladium Rhodium Platina .. Gold .. Ormium Sodium ..	Reduced by zinc, manganese, cobalt, and all those which precede silver.	

Berzélius gives the following series in which each metal is reduced from its solution by those which follow it;—

Gold,—silver,—mercury,—bismuth,—copper,—tin,—zinc.

Between the state of the precipitate and the decomposing force there exists a certain relation. In general, a too energetic action gives pulverulent deposit, whilst a tardy action gives either an adherent metallic layer, or flakes, or, again, crystals. Thus, solutions had to be sought which would give up their metal in contact with another metal, but with sufficient slowness to avoid a pulverulent deposit.

Gilding by the Method of Dipping.—It was not till a great number of experiments were made that the conditions necessary for a good deposit were discovered and fulfilled. We shall describe only the most important of these; but we shall give more in detail the methods actually in use.

Gilding by immersion is applicable only to silver, to copper, and its alloys, or to metals previously coppered. Baumé obtained the first success by means of a bath formed simply of a solution of chloride of gold, as neuter as possible. By this process small pieces of clock-works may be gilded with some degree of success; but the bath soon became acid, which destroyed its efficacy. This result, long known by experience, is confirmed by theory. The gold exists in this bath in the state of perchloride $Au^2 Cl^3$; therefore, there must be *three* equivalents of copper entering into dissolution for *two* equivalents of gold precipitated, in order that no chlorine may be set free. An attempt was next made to dissolve the chloride of gold in sulphuric ether, with results slightly more satisfactory. Macquer, in his Dictionnaire de Chimie, proposed to employ an alkaline solution instead of the acid one. This was the first step in a practical direction. Proust, Pelletier, and Duportal, were perfectly successful in an attempt to gild copper with a solution of chloride of gold in carbonate of potash. This method was improved by Elkington, who patented his invention in 1836.

Elkington's method, which was the only one employed for some years, consists of the following processes;—

In an iron vessel, gilded on the inside by boiling an old bath in it, this mixture was placed and made to boil,

Bicarbonate of potash	9 kilogrammes.
Chloride of gold	240 grammes.
Water	16 litres.

The boiling was continued for at least two hours, the water being renewed as it evaporated. At the expiration of this time, a portion of the gold has been precipitated under the form of a purplish black powder. The whole is then left to cool and decanted. A second boiling is requisite to render the bath fit for use; it is then of greenish colour.

When baths for gilding by simple immersion in an alkaline solution were first invented, the reaction which takes place was explained in various ways. It was even asserted that the perchloride of gold was transformed into protochloride under the influence of certain organic matters, such as saw-dust, capable of reducing gold. It was easy to refute this opinion, for articles which have not been dried may be gilded as well as those which have been dried by saw-dust.

M. Barral has propounded a theory which seems to explain facts in a rational manner. He shows that in a bicarbonate bath two equivalents of copper are dissolved while two equivalents of gold are deposited. Further, he has proved that in a bath absolutely exhausted, we shall find chloride of potassium and chlorate of potash instead of bicarbonate. M. Barral thinks, therefore, that for two equivalents of gold precipitated, there are three equivalents of chlorine set free. Two of these three equivalents form chloride of copper at the expense of the object immersed, and one equivalent seizes upon the potash. To represent this reaction, we may, therefore, write the formula

$$3\,Au^2\,Cl^3 + 6\,KO + 6\,Cu = 3\,Cu^2\,Cl + 5\,ClK + ClO^5\,K + 3\,Au^2.$$

Or if we admit the formation of bichloride of copper, we shall have

$$6\,Au^2\,Cl^3 + 12\,Cu + 6\,KO = 12\,Cu\,Cl + 5\,ClK + ClO^5\,KO + 6\,Au^2.$$

The latter reaction is the more probable, on account of the greenish blue tint which the liquid assumes.

The whole of the gold contained in this bath cannot be utilized. We must stop when a third or at most a half of the gold in solution has been deposited. This defect added to that of giving good results only when the bath is very much concentrated, has led to the nearly general rejection of this kind of bath.

Roseleur's Process.—This process is now employed almost to the exclusion of all others. The inventor, M. Alfred Roseleur, to whose labours most of the progress hitherto made in this art is due, has furnished us with some practical details, which have been tested by our own experience.

The best bath is composed of

Distilled water	10 litres.
Pyrophosphate of soda	800 grammes.
Cyanhydric acid	8 „
Chloride of gold	20 „

This quantity of chloride of gold represents 10 grammes of gold treated by the aqua regalis.

To prepare this bath, heat 9 litres of distilled water, into which pour slowly, stirring at the same time with a glass rod, 800 grammes of pyrophosphate. When the salt is completely dissolved, filter the liquid and leave to cool. Place in a glass vessel

10 grammes of virgin gold;
30 „ of pure hydrochloric acid;
15 „ of pure nitric acid

Heat slightly until red vapours are evolved. Then allow the solution to take place, which will give a deep yellow liquid; evaporate this liquid until it has reached the consistence of sirup. When sufficiently evaporated, the liquid will throw off no perceptible vapours, and it will be of a dark crimson colour.

Dissolve the chloride of gold in distilled water, and filter. This filtration serves to separate the chloride of silver which has been formed, owing to the presence of a small quantity of silver, which the purest gold of commerce always contains. The filter must be washed several times to take away all the chloride of gold, and the tenth litre of liquid completed with distilled water. Pour the chloride of gold thus placed in solution into the solution of pyrophosphate to which prussic acid has been added. This latter acid is not indispensable, but it renders the action of the bath regular. The liquid should be colourless; if it has a violaceous tint, it is because too small a quantity of cyanhydric acid has been used. This acid must be added with caution, for an excess of it would render the plating impossible without the aid of a battery.

A bath prepared in the manner described above, gives a very good yellow plating upon copper or brass articles cleaned by the processes already explained. It may be used also to gild silver. For this purpose, the proportion of cyanhydric acid must be slightly increased, and the articles boiled for about half an hour in the liquid so obtained. The thickness of the layer may be increased by moving the articles with a copper or zinc rod.

The gilding of copper may, by this method, acquire a certain thickness, if the article be dipped into a very weak solution of nitrate of mercury before it is placed in the bath. By repeating this operation several times, several successive layers of gold may be deposited, for instead of the gilded surface having no action on the bath, we expose successively a layer of mercury, which is dissolved in the bath, and is replaced on the surface of the object by a fresh quantity of gold.

In this way, by means of simple immersion, a plating may be executed capable of rivalling that obtained by means of the battery.

When taken from the bath, the articles are well rinsed and dried in hot saw-dust. If they are hollow, they must be dried in a stove heated up to 70° or 80°. Fig. 2639 represents a small stove with a saw-dust box and metal sieves for separating the saw-dust from small articles. These articles being too small to be brushed are sometimes sifted to render them bright. Figs. 2640, 2641, represent two of this kind of sieves. Their arrangement and mode of action will be seen by the figures.

2639.

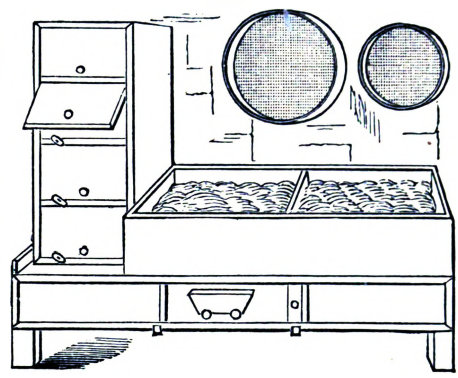

2640.

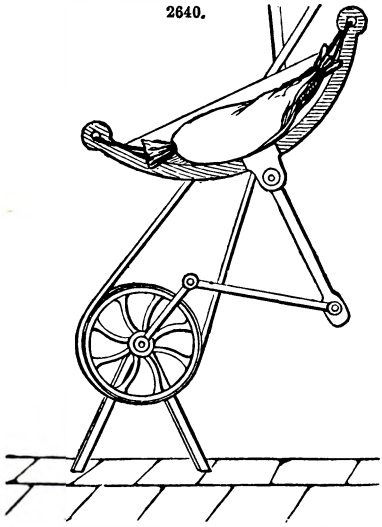

2641.

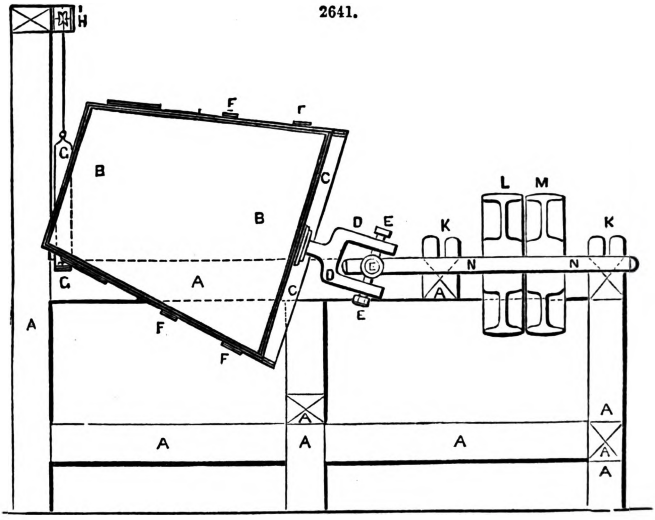

If it happen, which is but too often the case, that on being taken out of the bath the plating is found to be imperfect, either on account of accidents or on account of having neglected some of the precautions we have pointed out, the defect may be remedied by a process called by the French *mise en couleur*.

This consists in covering the defective articles with a mixture of the following salts dissolved in their water of crystallization:—

Sulphate of iron	Equal parts.
Sulphate of zinc	
Alum	
Azotate of potash	

The articles are then placed in a cylindrical furnace, Figs. 2642 to 2644, having in the middle an empty space into which the heat radiates, and the heating is continued till the salts undergo igneous fusion. The articles are then plunged into water containing sulphuric acid. The salts are rapidly dissolved and the gilding appears with a beautiful warm and uniform tint. If there be parts too highly coloured they may be reduced by striking them with the long bristles of a brush, as represented in Fig. 2645.

2642.

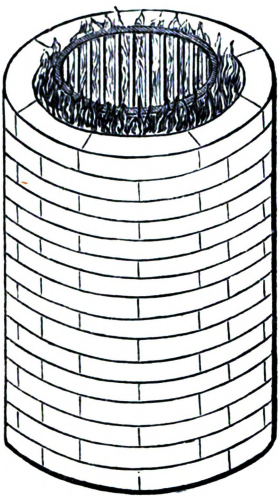

2643.

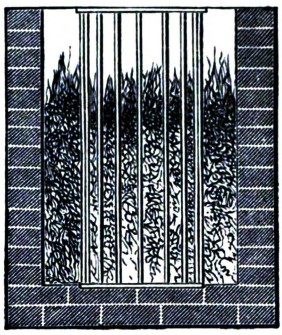

2644.

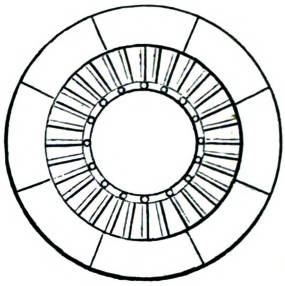

2645.

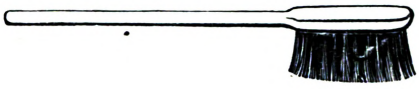

The above process cannot be employed on very fragile articles; the only remedy in this case being the battery.

Such is the method of gilding by immersion adopted by nearly all gilders. It is especially adapted to small articles of jewellery, but it may be employed for larger objects requiring a rich gilding. Skilful operators gild daily thousands of articles by this method, equal in appearance and solidity to those gilded by the electric process.

If we compare Roseleur's to Elkington's bath, we see at once the advantages of the former. Dilution in the one, concentration in the other; rapidity in the former, loss of time in the latter; ability to use nearly all the gold in the pyrophosphate bath, inability to use more than half the gold contained in the bicarbonate; the possibility of depositing at pleasure a small or a large quantity of gold with the one, much narrower restrictions with the other. We say this, not to detract from the merit of the famous English inventor, who was the first to discover a really practical process, but to show the advantages offered by the new method.

With the pyrophosphate bath we may, if we choose, deposit only 0·50 gramme of gold upon a kilogramme of jewellery. Small as this quantity is, it is too large for some manufacturers who desire only the appearance of gold. The following bath will satisfy them;—

Water	10 litres.
Bicarbonate of potash	200 grammes.
Caustic potash	1·800 kilogramme.
Cyanide of potassium	90 grammes.
Chloride of gold	20 grammes.

This will give a very light, but sufficiently adhesive gilding.

Gilding Aluminium by the Dipping Process.—A process invented by M. Maiche for gilding aluminium, if not of great practical value, possesses interest from a scientific point of view

The bath which he uses is formed of

Gold transformed into ammoniaret	10 grammes.
Cyanide of potassium	20 „
Distilled water	10 litres.

This bath used cold gives an adhesive gilding upon aluminium. The aluminium must be cleansed and rubbed with pounce before it is put into the bath.

Silver Plating by the Method of Dipping.—The oldest method of silvering is by boiling. By this means an exceedingly small quantity of silver might be deposited upon copper. The following is the commonest formula;—

Silver, or chloride of silver	30 grammes.
Powdered cream of tartar	2·50 „
Sea salt	2·50 „

This is made into a paste and kept in an opaque vessel for use. The articles are placed in a kind of basin pierced with holes, and plunged into boiling water contained in the lower basin, Fig. 2646, to which several spoonfuls of the silver paste have been added. The surfaces of the articles

are afterwards brightened by means of the sieve, for this kind of silvering is too slight to bear brushing.

A somewhat thicker plating may be obtained by means of the following solution;-

Distilled water ..	5	grammes.
Caustic potash	100	„
Bicarbonate of potash	100	„
Cyanide of potassium	60	„
Azotate of silver ..	20	„

2646.

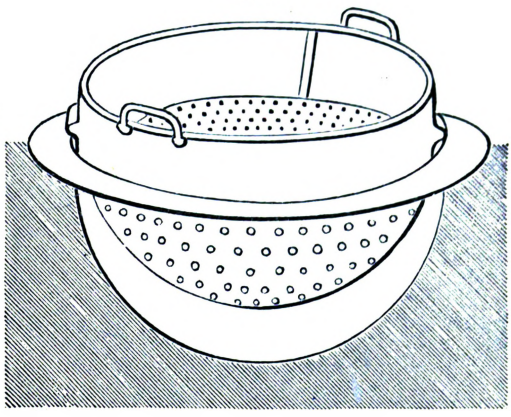

This bath is employed chiefly for articles used in carriage building.

All baths of double cyanide of silver and of potassium whiten copper, even when cold, when they have a great excess of cyanide of potassium. To make true silvering baths of them, they have only to be raised to the temperature of 70° or 80°.

The following is one of the formulæ which give the best results;—

Water	20	litres.
Cyanide of potassium	500	grammes.
Azotate of silver ..	150	„

This bath gives a brilliant plating, but rather light, and is especially adapted for those articles of jewellery which are too fragile to bear brushing; the time of immersion should be only a few seconds. The cyanide of potassium employed in this bath consists of about 65 per cent. of real cyanide and 35 per cent. of carbonate of potash.

Silvering with the Cold Bath.—This method, which is comparatively seldom employed, gives the whitest and the most unchangeable plating, and is the most economical. It is not suitable for very thick deposits, but it gives excellent results when only a thin or a moderate thickness of plating is required.

This process, invented nearly twenty years ago by M. Roseleur, and exclusively employed by him, is as yet hardly known to silverers. We, therefore, deem it useful to enter into minuter details.

A liquid bisulphite of soda is first prepared by pouring sulphurous acid into a concentrated solution of carbonate of soda until all the carbonic acid has been displaced by the sulphurous acid. The liquid should be slightly acid, and should redden slightly turnsole-blue paper. It should mark from 24° to 26° on the salinometer.

Having prepared a solution of 100 grammes of nitrate of silver in 1 litre of distilled water, it is poured gently into the bisulphite of soda, stirring at the same time to cause the white precipitate of sulphite of silver, which is formed by the contact of the two metals, to disappear. Being dissolved in an excess of sulphite of soda, this precipitate forms a double sulphite of soda and silver, which constitutes the bath.

By placing copper or brass articles, previously cleansed, into this bath, we may obtain, according to the time of immersion;—

1. A coating as light as we wish, and perfectly white and bright. An immersion of a few seconds is sufficient for this purpose.

2. A more solid plating, such as is required for jewellery. A quarter of an hour is sufficient to produce this result.

3. A dull plating, equal to that produced by the battery, for all articles which do not require a very thick deposit.

The bath must be kept up by adding alternately salts of silver and bisulphite of soda, taking care to put into the bath as much salts of silver as it can easily dissolve. A deposit is gradually formed on the bottom and the sides of the vessel; this deposit must be removed from time to time by pouring off the liquid.

What we have said above with respect to the obtaining, within a certain limit, any thickness of coating, seems to contradict the theory which we have already given. But we have in the case of the bisulphite bath a double phenomenon. At first the deposit is effected by the ordinary reaction—that is, one equivalent of copper is substituted for one equivalent of silver in the solution, whilst one equivalent of silver reduced to the metallic state affixes itself to the copper article. But, besides this action, another is produced, due to the special composition of the bath, and in virtue of which the action of depositing is continued. We have, in fact, brought together sulphite of soda and sulphite of oxide of silver, or, for this latter, sulphurous acid, oxygen, and silver. But silver has little affinity for sulphurous acid and oxygen: sulphurous acid, on the contrary, has great affinity for oxygen, and has a tendency to transform itself into sulphuric acid. We may, therefore, naturally admit that the silver of the sulphite of silver is deposited in a metallic state upon the objects, and that the sulphurous acid of this substance combines with the oxygen to form sulphuric acid, and, consequently, sulphate of soda.

This fact may be represented by the following formula;—

$$SO^2NaO, SO^2AgO = SO^3NaO + SO^2 + Ag.$$

It is difficult to explain, except by the love of routine, why this kind of bath, the advantages of which are so obvious, has not been more generally adopted. Requiring no heating, besides the saving thereby effected, it is always ready for use, and is not restricted by the size of the vessel, as

in the case of hot baths. The battery is not required, and the weight of the silver deposited is always proportional to the time of immersion, a fact which enables us to calculate exactly the value of the plating. Again, bisulphite of soda is a harmless and a not very costly article.

Tinning by the Method of Dipping.—A hot solution of 300 grammes of alum and 10 grammes of protochloride of tin in 20 litres of water gives a bath by means of which a very light deposit of tin may be made upon iron and zinc. This mere pellicle is incapable of preserving the metal from oxidation, and is used only for the commonest objects or as a complement to the cleansing before immersion in other baths. Large quantities of hooks and eyes are tinned by this process.

Antimony Plating by the Dipping Process.—Antimony is firmly deposited upon copper and its alloys, without the aid of a battery, in a bath composed of—water, 10 litres, oxichloride of antimony, 20 grammes. The liquid should be slightly acidulated by means of hydrochloric acid, and used boiling. In this bath articles are in a few minutes covered with a beautiful coating of antimony.

Coppering Zinc by the Dipping Process.—Zinc which is to be gilded must first be covered with a tolerably thick coating of copper. For this operation, recourse is had to two baths which are successively employed. The first, with a cyanide of potassium base, is used with a voltaic battery, and the article receives in this first bath a sufficient coating of copper to preserve it from the acid action of the second, which is an acid solution of sulphate of copper also used with the battery.

The cyanide of potassium bath is too expensive relatively to the low price of the articles manufactured, and therefore much is to be gained by substituting a dipping bath for the cyanide of potassium and the electric baths. The following is suitable for this purpose;—

A quantity of cyanhydric acid, sufficient to produce saturation, is applied to common ammonia at 22°, and into the liquid thus obtained an ammoniacal solution of any salt of copper is poured. By this means a double cyanide of copper and ammonium is formed very suitable for coppering zinc, on the condition that it always remain highly alkaline. The following proportions give the best results:—

Liquid cyanide of ammonium	1 kilogramme.
Distilled water	20 litres.
Acetate of copper	200 grammes.
Ammonia 22°	100 „

The plating thus obtained is of a beautiful light red colour and remarkably adhesive.

Coppering Iron by the Dipping Process.—Iron wire and certain small articles are sometimes coppered by this process. It consists in immersing the articles rapidly in an acid—a weak solution of sulphate of copper. A very thin coating of copper is thus deposited, to which the draw-plate gives a little more adhesion and brightness. If the immersion were not made rapidly the iron would be acted upon by the acid of the bath, and the copper would be reduced under the form of a brownish red mud having no adhesive quality.

Metallic Deposits by Double Affinity.—We denote by this term those deposits which are effected in certain liquids in the presence of two metals, one of which substitutes itself for the metal in solution, whilst the other receives the deposit of the metal which was primitively in solution.

There is really a galvanic action resulting from the contact of two metals in a liquid which exerts a chemical action upon them, but in the majority of cases a special phenomenon seems to be produced of a nature more particularly chemical, for the weights of the metal dissolved and of the metal deposited are not in equivalent atomic proportions.

Nearly all baths by simple immersion act more rapidly when a piece of zinc is plunged into it simultaneously with the object to be plated and in contact with this latter. On the other hand, nearly all galvanic baths give a metallic deposit in the same conditions, only this deposit is slow. Two processes only—Roseleur's method of tinning, and Weill's method of coppering—offer real advantages and are thoroughly practical.

Weill's Method of Coppering.—This process enables us to obtain, without heating, an adhesive deposit of copper upon iron and steel by immersing it in an alkalino-organic bath in contact with zinc. The bath is composed of a salt of copper, held in solution in caustic soda, by the presence of an organic matter, such as tartaric acid, double tartrate of soda and potash, glycerine or albumen.

Experience has shown that the following proportions give the best results;—

Sulphate of copper	350
Seignette's salt	1500
Caustic soda	800

which correspond to two equivalents of tartaric acid for one equivalent of salt of copper.

By dipping successively the baser metals into this solution, we obtain various results, which may be summed up in the three following observations;—

1. The metals whose oxides are insoluble in caustic soda are plated only by means of the contact with zinc.

2. The metals whose oxides are soluble in the fixed alkali, and which form only one salifiable oxide, are covered with a very thin coating, which does not increase with the time of immersion.

3. The metals which may form several salifiable oxides, soluble in the fixed alkali, do not become plated in the solution, and they decompose it in contact with zinc, giving a precipitate of protoxide of copper.

The practical conclusion from these observations is that the really important application of the bath in question consists in depositing, by contact with zinc upon iron and steel, an adhesive coating of copper, of good quality and varying in thickness according to the time of immersion. The thickness of this coating may, in case of need, be increased in the galvanic bath, for the

metal is sufficiently protected against the action of the sulphuric acid by this first coating of copper.

The cleansing of iron is accomplished in the same way for this bath as for others; it is worthy of remark, however, that the cleansing is completed in the bath itself, for the oxide of iron is soluble in the alkalino-organic solution.

The time of immersion varies, 3 to 72 hours. The bath is kept up simply with sulphate of copper and, from time to time, with caustic soda. The Seignette's salt is not decomposed, and remains in the bath almost indefinitely.

By varying the respective proportions of salt of copper and of double tartrate of soda and potash, so as to have only one gramme of tartaric acid to one gramme of salt of copper, we obtain, no longer a good plating, but a series of very curious and permanent colorations which are produced always in the same order, namely, orange, white, light yellow, deep yellow, crimson, green. If the immersion is continued after the green has been produced, the metal assumes a brownish appearance, not pleasing to the eye. These various colourings may be utilized in the decoration of cast-iron objects now extensively used in architectural ornamentation, as they resist sufficiently atmospheric agents.

The alkalino-organic bath dissolves various metallic oxides, and gives deposits of metals other than copper. The action of baths compounded with various oxides is summed up in the following lines taken from the Annales de Physique et de Chimie;—"The metals of the metallic oxides of the formula $m^2 O^3$, which are at the same time susceptible of forming a salifiable protoxide, are capable of being precipitated upon copper from their alkalino-organic solution in contact with zinc and under the influence of heat, a phenomenon which is then accompanied by a liberation of hydrogen; the analogous metals which form only one salifiable sesquioxide, such as alumina and oxide of chrome, are not. Copper is directly reduced from its alkalino-organic solutions by iron, steel, and so on, under the form of an adhesive coating, in contact with zinc and at the ordinary temperature. Under the influence of heat these metals receive, on the contrary, only various colorations which will not resist the action of the brush."

Galvanic action undoubtedly plays an important part in copper-plating; but it seems clear that it is also due in part to a more specially chemical action, for zinc itself becomes plated with copper, and the decomposing action is continued none the less. Again, a very small quantity of zinc and a few points of contact are sufficient to enable the deposit to be effected in good condition. And the quantity of zinc dissolved is far from being proportional to that of the copper deposited.

Tinning by Double Affinity.—Roseleur and Boucher's Process.—This process, which was patented a few years ago by the inventors, gives remarkably good results, and is now widely employed. It is used especially in the manufacture of kitchen utensils, hooks and eyes, pins, and so on. A medal, 80 centimètres in diameter, representing the Emperor Napoleon III., and tinned by this process, was exhibited in the Paris Exhibition of 1867, and such was the perfection of this tin-plating that many visitors took it for silver. An idea of the efficacy of this deposit in protecting iron may be gathered from the fact that several articles, tinned by this process, which had gained a Prize Medal in London in 1862, were again exhibited in Paris in 1867 without having been touched in the meantime.

We will give a description of the process in the words of the inventor;—"The bath may vary greatly in its composition; but the following two formulæ attain the object rapidly and surely. We much prefer the second, however, which offers the single objection of being based on the employment of a salt that all manufacturers do not always obtain from a very regular composition.

"First formula;—

Distilled water	300 litres.
Cream of tartar	3 kilogrammes.
Protochloride of tin ..	300 grammes.

The whole being dissolved gives a colourless solution, but with a strongly acid reaction, which constitutes the bath.

"Second formula;—

Distilled water	300 litres.
Pyrophosphate of potash	6 kilogrammes.
Acid protochloride of tin	600 grammes.
The same, dissolved ..	2·400 kilogrammes.

The whole is dissolved at the same time upon a metal sieve, and after being shaken there remains a clear liquid, which is the bath.

2647.

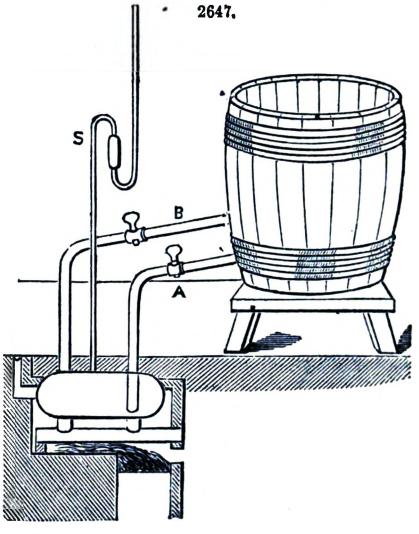

"One of these solutions is placed in a cask staved in at the top, and of sufficient capacity. This cask, Fig. 2647, receives in the lateral part of its base, but at different heights, the two pipes of a small metal boiler fixed over a furnace beneath the bottom of the vat; the pipe A which is on a level with the bottom of the cask reaches, at its other end, nearly to the bottom of the boiler; the pipe B, on the contrary, the one which enters the vat higher up, at 6 or 8 centimètres from the bottom, comes from the top of the boiler. This boiler has a third pipe in S which serves to protect the workmen from an explosion, in case there were an obstruction in the pipes communicating with the cask and the

boiler. It will be seen that the things being thus arranged, and the liquid filling both the vat and the boiler, if we heat the latter, the liquid which it contains being expanded by the heat, will become lighter and will ascend to the top of the vat by the pipe which enters highest into it, but at the same time the vacuum will be filled with an equal quantity of cold, and consequently heavier liquid, which will enter from the vat into the boiler by the pipe which is inserted at the bottom of the latter. By this means a continual circulating motion is kept up which will constantly bring the coldest portions into the boiler, while the hottest are driven out by virtue of their less density. This method is not designed merely to heat the liquid, but to keep the bath in a state of continual agitation, and to renew as they become exhausted the portions of the liquid which touch the articles to be tinned.

"When it is required to tin large articles, such as culinary utensils, for example, they may, after being cleansed and rinsed, be thrown careless into the bath with some fragments of zinc, or, better still, with some spirals of this metal; these latter injure less by their contact the articles to be tinned. When, on the contrary, the articles are very small, such as pins, hooks, tacks, and so on, they are arranged in beds of 2 or 3 centimètres thick upon pieces of zinc pierced with small holes to allow the passage of the liquid, and provided with a rim to prevent the articles from rolling off. These pieces are let down into the bath by means of numbered chains, in order that they may be pulled out in the opposite direction. These pieces of zinc must be cleaned occasionally.

"The time of the operation may vary from one hour to three, after which the whole is taken out to introduce into the bath 250 grammes of pyrophosphate, and the same quantity of dissolved protochloride of tin. While these salts are being dissolved, the larger articles are brushed, and the smaller moved by means of an iron fork to change the points of contact; the whole is again placed in the bath for at least two hours. These two successive immersions and this minimum time are necessary to give a good tinning. It only remains now to brush the larger objects again, if they are required to be bright, and to sift the smaller ones, and to dry the whole in very hot and dry pine saw-dust.

"If it be observed that the deposit of tin, though abundant, is grey and dull, the bath must be charged once or twice with acid protochloride of tin; if, on the contrary, the deposit is very white, but puffy and of no adhesion or thickness, the acid salt must be suppressed and replaced by drawing off. In this case also, the quantity of salt of tin may be diminished, and that of the pyrophosphate increased.

"When a bath has been used for a long time, it must be drawn off to separate from it the pyrophosphate of zinc which has been formed. When after some years it is quite worn out in consequence of an alteration of the salts, it may be put aside to keep articles in which have been cleaned."

Galvanic Deposits in Thin Coatings.—We come now to that part of the art of coating the baser metals which, whether we consider the wonderful variety of its productions, or the immense quantity of articles it furnishes to commerce, is by far the most important. Gold and silver plating are the most usual of these metallic deposits; and it will be found interesting to examine the successive transformations which have led this art to the degree of perfection in which it now is, and beyond which it seems impossible to go.

Hardly had Volta invented the admirable instrument which has rendered him famous, when it was attempted to apply the battery to the decomposition of metallic solutions. Volta himself, Nicholson, and Cruikshank had applied the battery to the precipitation of metals, but without thinking of obtaining them in the special state which constitutes the qualities of a good metallic deposit. The deposits which they obtained were pulverulent, lamellate or crystallized, but not continuous or adhesive layers.

Brugnatelli, a pupil of Volta's, afterwards his colleague in the University of Pavia, was the first to obtain, in 1802, a deposit of gold and silver offering the aspect of a regular and uniform layer, such as is required for gold and silver plating. Brugnatelli even succeeded in depositing platina; but this metal was reduced to the state of a very fine powder, which required friction to give it brightness and adhesion.

The solutions employed by Brugnatelli were alkaline; they consisted of ammoniarets of gold, silver, or platina, that is, the product obtained by treating the chlorides of gold and platina, or the azotate of silver, by ammonia. There is much obscurity in the descriptions of Brugnatelli, but according to the Journal de Physique et Chimie of Van Mons, his method was as follows:—

"The most expeditious method of reducing, by means of the battery, dissolved metallic oxides, is to make use of their ammoniarets; by placing the ends of two conducting wires of platina into ammoniaret of mercury, the wire of the negative pole speedily becomes covered with small particles of this metal."

"I have recently gilded," says the same chemist in another journal, "in a most perfect manner, two large silver medals, by putting them in communication by means of a steel wire with the negative pole of a voltaic battery, holding them one after the other in ammoniarets of gold recently prepared." . . .

MM. Barral, Chevalier, and Henri, tried to reproduce Brugnatelli's operation by following his descriptions, but with very imperfect results, the nature of the dissolvent employed by the learned Italian not being known. But as there is nothing to lead us to suppose that Brugnatelli wished to envelop the subject in mystery, we are induced to suppose that this dissolvent was the liquid itself in which the ammoniaret was precipitated. And, in fact, if we take a solution of gold in aqua regalis, and if, without evaporating it to get rid of the excess of acid, we pour into it an excess of ammonia, we obtain the precipitate of ammoniaret of gold; but this precipitate redissolves itself in part, especially by the action of heat, in the ammoniacal salts which have been formed. It is, therefore, probable that Brugnatelli's solution was a double chloride of gold and ammonium, and not ammoniaret of gold.

The problem was perhaps already solved from a scientific point of view; but it was far from being solved practically, and many years passed without any serious application being made of it. At length, in 1825, M. de la Rive, of Geneva, resumed the experiments of Brugnatelli, and attempted to decompose chloride of gold by means of the battery. His efforts were unsuccessful, except in the case of platina, the only metal that is not sensibly acted upon by the chlorine set free by the decomposition of the chloride of gold. It was not till 1840, that is, after the labours of M. Becquerel in the matter of applying electro-chemical decompositions to the treatment of ore, that M. de la Rive realized the idea of employing the simple apparatus for the application of gold upon the other metals. The following is his process;—

A very weak solution of gold is placed in a cylinder of gold-beater's skin, which cylinder is placed in a vase full of water acidulated by a few drops of sulphuric acid. In the outer vase is put a piece of zinc which communicates by a metallic wire with the object to be gilded, the object being placed in the cylinder of gold-beater's skin. The solution of gold should be as neutral as possible, and a very weak current must be employed. Notwithstanding these precautions, the gilding is far from perfect, and the process is open to several objections, the chief of which are the slight adhesion of the gold, and the great loss of metal occasioned by the contact of the solution with the skin, and the endosmose which is gradually effected through the membrane causing the gold to be precipitated upon the zinc.

It became necessary, therefore, to discover a better method if galvanic gilding was to be made a useful art. Elsner showed that the defective adhesion was owing to the acidity of the auriferous liquid, and Boettger, profiting by these observations, succeeded in gilding in a double chloride of gold and potassium.

But the complete solution of the problem and the first really practical application of electro-plating are due to Messrs. Elkington, of Birmingham. In September, 1840, Henry Elkington took out a patent for gilding copper by means of a solution of oxide of gold in prussiate of potash. At first he employed the simple apparatus in the production of the galvanic current. His apparatus differed from that of De la Rive's in having a vase of porous earth instead of gold-beater's skin. At the same time Richard Elkington patented a method of applying silver by means of the galvanic current and a solution of chloride of silver, in prussiate of potash.

From this time electro-chemical gold and silver plating may be considered to have been discovered. M. de Ruolz followed with the compound apparatus and a large number of solutions, the chief of which are;—

Cyanide of gold dissolved in simple cyanide of potassium.
Cyanide of gold in yellow prussiate.
Cyanide of gold in red prussiate.
Chloride of gold in the same cyanides.
Sulphuret of gold in sulphuret of potassium.

M. de Ruolz attempted also to deposit other metals, and succeeded in depositing brass by the electric process.

If, therefore, the merit of having discovered electro-plating has been wrongly ascribed to M. de Ruolz, since he had been preceded by several months by the Messrs. Elkington, we should be doing him an injustice if we withheld from him the merit of having endeavoured to improve and generalize the processes of the English manufacturers.

MM. Roseleur and Lanaux succeeded in obtaining platina in adhesive coatings of any thickness, and M. Roseleur, by applying phosphates and sulphites to the dissolution of various metallic oxides, rendered thoroughly practical most of the operations of electro-metallurgy.

Many other chemists aided in bringing this beautiful science to the present degree of perfection; but we have said enough to give an idea of how it grew into existence. We will now consider the processes actually in use, prefixing, however, a few words on the galvanic batteries most generally employed.

Batteries.—Almost every day we hear of some *inventor* extolling the merits of a new pile endowed with every imaginable quality. Unfortunately, on testing this wonderful invention, we find in well-nigh every case that no progress whatever has been made, and this negative result is not surprising, for most of these pretended inventors are ignorant of the very rudiments of physics and chemistry. Though there is at the present time a large number of batteries of various systems, three only, Bunsen's, Smee's modified, and Daniell's, are generally employed in electro-plating.

Bunsen's pile is employed whenever a strong current is required. This pile is by far the most frequently used, notwithstanding the objections to which it is open, and which are, chiefly, the cost of keeping it in working order, the employment of nitric acid which emits disagreeable nitrous vapours, and the shortness of its duration. It is hardly necessary to describe this *battery*, which is well known. It will be seen that it is composed of an outer vessel of stone or porcelain, a zinc cylinder, a porous cylinder or cell, and a cylinder of carbon. Ordinary nitric acid is placed in the porous cell, and in the outer cell or containing vessel, water acidulated with two or three hundredths of sulphuric acid, and containing a salt of mercury (1 or 2 per cent.) for the purpose of amalgamating the zinc.

The elements of the *battery* are connected by establishing a communication between the carbon of the first element or cell and the zinc of the second, and so on with the whole. A zinc remains free at one end and a carbon at the opposite end; the articles to be plated are put in communication with the zinc (the negative pole) and the acid with the carbon (the positive pole).

Smee's *battery* modified is employed chiefly in electrotyping; it is less powerful than Bunsen's, but more convenient and less expensive. It consists, as will be seen by merely inspecting, of a gutta-percha trough, having on the inside three vertical grooves. In one of these grooves retort carbon is placed: the other two contain zinc. To put this battery in action, the vessel is filled with water saturated with sea salt, or acidulated with a twentieth of sulphuric acid. Sometimes,

especially in large apparatuses, the carbon is omitted in favour of silvered and platinized plates of copper.

Daniell's battery, which, by means of a happy modification, will give a constant current for several months without requiring any care. To put this battery in action, the porous and the glass vessels are filled with water, and the outer vessel with acidulated water. This battery is especially suited for gilding very small objects, such as watch-works, for example, and for all operations which require only a weak current.

Finally, we have to call attention to a recent invention due to M. Léclanché, and which is very satisfactory both as regards the duration and the regularity of the current. It consists of an outer glass vessel containing sand, chlorhydrate of ammonia, and a very small zinc cylinder; and a porous vessel containing bioxide of manganese agglomerated by a gummy solution, in which is placed a copper rod.

Galvanic Gilding.—Galvanic gilding is accomplished both with and without heat: with heat for articles of small dimensions, such as jewellery and table services; without heat for larger objects, such as clocks and chandeliers.

It was long believed that gilding effected with heat was less resisting than that obtained without heat. The truth is, on the contrary, that with *an equal quantity of gold* the former is much more solid than the latter. The fact of the former method being employed for small articles of little value, in which case small quantities of gold are used, caused the error to obtain credence. The following two formulæ are those oftenest employed in gilding without heat;—

Distilled water	3 litres.
Pure cyanide of potassium	30 grammes.
Virgin gold (as a chloride)	10 „

This bath is prepared by dissolving separately the chloride of gold very neutral and the cyanide of potassium, and then pouring the former solution into the latter. This bath, especially when it has been recently prepared, is a rather bad conductor; and the second formula, which gives more regular results, is to be preferred;—

Distilled water	3 litres.
Pure cyanide of potassium	25 grammes.
Carbonate of potash	100 „
Ammoniaret of gold from	10 „ of gold.

The ammoniaret of gold is prepared by pouring an excess of pure ammonia into a solution of chloride of gold. The precipitate is collected upon a filter, washed, and without drying, for this compound is explosive; the filter is cast into the solution of cyanide of potassium previously prepared; this is boiled an hour and filtered to take away the paper of the first filter. A sufficient quantity of water to make 10 litres is then added, and as soon as the bath is cold it may be used.

2648.

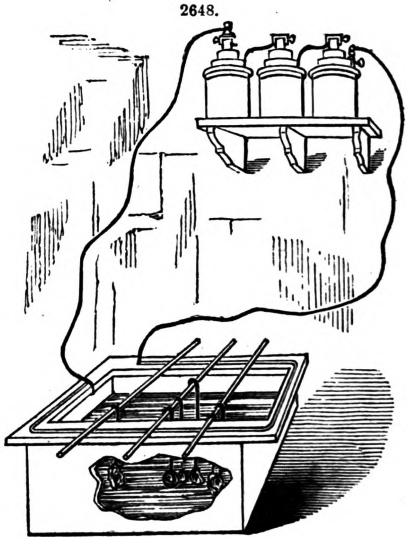

Cold baths are usually placed in wooden troughs, lined with gutta-percha, and of the shape of those shown in Fig. 2648. The positive pole is put in contact with a plate of gold or platina, while the negative pole is in communication with a copper stand supporting the articles to be gilded.

It sometimes happens that objects gilded in the cold bath have an unsatisfactory colour; this may be remedied by dipping the object into a solution of nitrate of mercury and subjecting it to the action of heat, or by rubbing over with boiled borax, then heating it, and finally washing it in water acidulated with sulphuric acid. To avoid all chances of failure, recourse should be had to hot baths whenever practicable.

The following two formulæ give excellent results; the second, however, is to be preferred on account of the regularity of its results, and also because it allows a very thin coating to be deposited, if such be desired, of a very beautiful appearance.

First formula

Distilled water	100 litres.
Gold, as a chloride	180 grammes.
Pure cyanide of potassium	300 „
Carbonate of potash	150 „

Second formula;—

Distilled water	10 litres.
Phosphate of soda	500 grammes.
Bisulphite of soda	150 „
Pure cyanide of potassium	10 „
Gold (as a chloride of gold)	10 „

These baths are employed nearly boiling and with anode of platina. They are kept up by adding from time to time a solution composed of 20 grammes of cyanide of potassium to 10 grammes of gold transformed into ammoniaret, the whole dissolved in a litre of water.

Copper and its alloys, such as bronze and brass, may be gilded in these baths. They serve equally well for silver and platina; but for iron and steel the bath should be composed as follows;—

Distilled water	10 litres.	Phosphate of soda	1200 grammes.
Gold (as a chloride of gold)	20 grammes.	Bisulphite of soda	1200 „
Cyanide of potassium	10 „		

It is better to copper the objects before placing them in the bath. Tin, lead, and zinc, should also be coppered, alkaline baths being employed for that purpose. Aluminium, on the contrary, requires an acid bath of sulphate of copper. It is obvious that however perfect the method of gilding which we have been describing may be, it requires, in certain cases, precautions or particular arrangements for gilding certain objects.

In this way the arrangement represented in Fig. 2649 is employed in the manufacture of fine silver wire or gilded copper wire. This wire is used in the manufacture of lace, and constitutes an

2649.

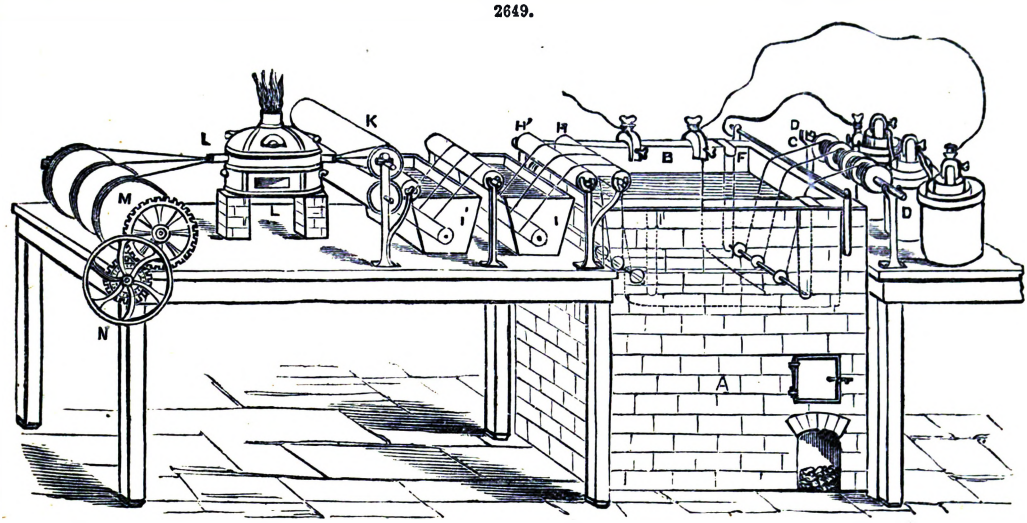

important branch of industry, carried on chiefly at Lyons. The operation will be understood from the following description of Fig. 2649;—A, the furnace; B, enamelled cast-iron boiler; C, spindle supporting the bobbins; D, copper rod establishing communication between the wires and the negative pole; E, ivory or porcelain rollers; G, platina wires serving as anodes; H, false bobbins; I, vats containing one a solution of cyanide, the other water for rinsing the wire; K, rollers covered with old calico to wipe the wire; L, heated tube in which the wire is dried; M, bobbins set in motion by the crank N, and designed to receive the gilded wire.

After being gilded, the wire is passed through the draw-plate or through the rolling mill, according as it is required to be round or flat.

The gilding of watch-works also needs special preparations. For the details of this operation, which is carried on chiefly in Switzerland and in the Jura, we refer our readers to the excellent work of M. Roseleur, entitled Manipulations Hydroplastiques. We will merely remark that the preparation consists of a silver-plating called grainage, which gives the objects a slightly dull, but very pleasing appearance.

This silvering is accomplished by applying to the objects, with a hard brush, the following mixture;—

Silver powder	30 grammes.
Sea salt	400 „
Cream of tartar	120 „

This formula is one of those employed by M. Pinaire, of Besançon. The articles are afterwards gilded in the ordinary bath. At Paris this kind of gilding is executed with great perfection by M. Bressoud.

In bringing to an end our remarks on electro-plating, we have to mention a process of gilding which partakes at once of the methods of plating by mercury and by the battery. This process, which obtained a first prize in the Paris Exhibition of 1867, is due to M. Dufresne.

Gilding by means of mercury is, as is well known, injurious to the health of the workmen, because they are continually exposed to the action of the mercurial vapours. Indeed, to obtain an equal thickness and a uniform appearance, the workman is obliged to turn the object about over the fire to drive off the mercury by volatilization, and to strike it in all directions with the brush. The consequence of this is that, in spite of the improved draught introduced by M. Darcet, large quantities of mercurial vapours are absorbed by the men.

Again, in certain cases it is found that the electro-plating is not sufficiently thick and solid, and recourse must be had to mercury. In these cases M. Dufresne's process is serviceable; it may be described as follows;—A neutral bath of mercury is prepared by means of nitrate of mercury neutralized by carbonate of soda, and containing cyanide of potassium, and in this bath the objects are subjected to the action of the galvanic battery. They are soon covered with a thick coating of mercury. A thick coating of gold having been deposited on them by the usual means, they are

again placed in the solution of mercury. The mercury is then evaporated by the action of heat, without the assistance of the brush as in the ordinary case of gilding by mercury.

This process offers some advantages from a hygienic point of view, though it becomes necessary to proceed in the usual manner to *equalize* the gilding when a thick plating is required. But it is astonishing that this *discovery* should have obtained a *first prize* on account of its novelty. If the jury had consisted of Frenchmen only, the fact would have been less surprising, for excess of patriotism often leads them to doubt concerning progress which has not been made in France, and keeps them ignorant of what other peoples are doing, but that an *international* jury should have awarded the highest possible reward, in 1867, to a *discovery* described at length in the Annales de Chimie, of St. Petersburg, as long ago as 1851, is really astounding. The whole of the interior of St. Saviour's Cathedral at Moscow was gilded in 1851, under the direction of the Duke de Leuchtemberg, who at that time presided over the Galvanic Institute of St. Petersburg. We have to add, however, that M. Dufresne has renounced an exclusive right to his process.

Electrotyping has been gradually encroaching upon the process of stereotyping, and has almost superseded that process in America. The plan adopted is similar to that of copying woodcuts, namely, to lay a sheet of softened gutta-percha upon the surface of the page of type, and subject it to increasing pressure until it is cold; the gutta-percha copy is then removed, and treated as in copying wood engravings. It would be advisable to try a somewhat softer material for this purpose, such as the mixture of gutta-percha and marine glue. This material takes a sharper and smoother impression than gutta-percha alone, and the deposit spreads over it more rapidly; and, being softer, it would enter more freely and with less pressure between the fine lines of the letters, and still not be sufficiently soft to enter the minute crevices between the body of the types. If a solution of grape-sugar (as used in Drayton's patent process for silvering glass), aldehyde, or other reducing agent, was substituted for the phosphorus solution, for reducing the silver upon the surface of the mould, it would be an advantage, as, besides the dangerous character of the phosphorus, it has an offensive odour, and the copper deposited upon surfaces prepared by it, moreover, is invariably brittle.

The mould may also be prepared for a deposit by blackleading; it will require a first-rate quality of blacklead, and prolonged and attentive brushing, but will then afford a good result. The air-bubbles may be removed when the mould is in the liquid, by directing a powerful upward current of the liquid against them by means of a vulcanized india-rubber bladder, with a long and curved glass tube with a fine orifice attached to it; but the liquid should be free from sediment.

The advantages of electrotyping over stereotyping are numerous; the metal is harder, takes a sharper impression of the mould, and delivers the ink much more readily than type metal, besides being a cleaner process; it also takes up less ink, and consequently the printed pages dry more quickly. Both woodcuts and letter-press have also been copied in plaster of Paris, and the deposit of copper formed upon that; but this material is much inferior to gutta-percha for the process.

Iron and steel wire may be coated with an adhesive deposit of copper, by first immersing them, with their surfaces perfectly clean, in the cyanide coppering liquid, and completing the deposit in the ordinary sulphate solution. The coils should be kept separate from each other in the liquid by suspending them upon a horizontal brass rod, turning it occasionally to cause a uniform deposit. Iron screws and nails may be treated in a similar manner, except that they should be contained in a wicker basket, which is shook about occasionally to produce a uniform deposit.

Copying Daguerreotype Pictures.—An interesting application of the deposition of copper, and one of the easiest to be effected, is that of copying daguerreotype pictures. First solder a wire to the back of the plate near the edge; varnish the back and edges, and allow it to dry; hang it in a clean sulphate of copper solution, which is perfectly free from dust or grease on its surface; and in the course of twenty or thirty hours the deposit will be sufficiently thick to be removed.

The invention of E. A. Jacquin has for its object the preparing of printing surfaces, so as to give them the property of yielding a greater number of impressions than they are capable of yielding in their ordinary state. And the invention consists in covering the printing surfaces, whether intaglio or relief, and whether of copper or other soft metal, with a very thin and uniform coating of steel by means of electro-metallurgical processes. This invention is applicable whether the device to be printed from be produced by engraving by hand, or by machinery, or by chemical means, and whether the surface printed from be the original or an electrotype surface produced therefrom.

In carrying out the invention the solutions of iron employed may be varied, and such is the case in respect to the arrangement of galvanic battery or other source of electric currents used.

It is important that a ferric solution should be employed which will not dissolve or corrode the plate intended to be coated, for if it be attempted to use such a solution, though the iron will be precipitated, it will not only be in a non-coherent state, but the engraved surface itself will be liable to be attacked and injured. It may also be remarked that the coating of iron admits of being removed from a printing surface of copper without injury to the original plate, hence the original plate may, after being coated and used for some time, have the worn coating removed, and then be re-covered with an iron coating as often as may be required; and if care is taken to remove the coating of iron before it has been entirely worn away, the engraved copper or other plate may be made to print a vast number of impressions and yet remain in the original state it was in when it left the hands of the engraver, or was otherwise first produced; the only limit appears to be in the gradual change which takes place in the body of the printing surface by the compression to which it is subjected in the process of printing. Heretofore, in respect to plates engraved in intaglio, if of steel they each yield on the average about 3000 impressions without retouching; if of copper they each yield on an average not more than 800 without retouching; whilst electro-casts of copper obtained from the originals will not on an average each yield even 200 impressions without retouching; in fact, such printing surfaces are so easily worn, that after the first hundred or 150 impressions there is a considerable deterioration in the quality of the work produced. Therefore, for the supply of the number of impressions often required by art associations and others, it has been found necessary to multiply the electro-casts very considerably. In such cases the invention is applicable with con-

siderable advantage, for Bradbury, Wilkinson, and Co., who have successfully applied the process, find that an electro-plate 40 × 22 in. covered or coated with iron has yielded 2000 impressions without its being necessary to remove and renew the iron coating, there being no perceptible difference between the first and last impression, the work on the plate appearing not to have suffered in the slightest degree. Hence in future, by the application of the invention, it will only be necessary to multiply electro-casts to such an extent as may be necessary to ensure the production of prints or impressions with the requisite speed on paper, calico, or other fabrics. At the same time an original engraving on copper would become, when treated according to the invention, more lasting than if engraved on steel. Although original surfaces engraved in relief, and also electro and other casts taken from them, yield a considerably greater number of impressions than those obtained from plates engraved in intaglio, to which the invention has not been applied, nevertheless the invention is applicable with great advantage to such relief printing surfaces, whether of copper or other soft metal, for if they be coated with iron according to the invention they will yield almost an indefinite number of impressions, provided the iron surface be renewed as often as may be necessary, and the printing surfaces be again re-coated.

In carrying out the invention the use of that modification of Grove's battery known as Bunsen's is preferable, because it is desirable to have what is called an intensity arrangement. The trough used for containing the solution of iron in which the engraved printing surface is to be immersed in order to be coated, is lined with gutta-percha, and it is 45 in. long, 22 in. wide, and 32 in. deep. In proceeding to prepare for work, the trough, whether of the size above-mentioned or otherwise, is filled with water in combination with hydrochlorate of ammonia (sal-ammoniac) in the proportion of 1000 lbs. by weight of water to 100 lbs. of hydrochlorate of ammonia. A plate of sheet iron nearly as long and as deep as the trough is attached to the positive pole of the battery and immersed in the solution. Another plate of sheet iron about half the size of the other is attached to the negative pole of the battery and immersed in the solution, and when the solution has arrived at the proper condition, which will require several days, the plate of iron attached to the negative pole is removed, and the printing surface to be coated is attached to such pole, and then immersed in the bath till the required coating of iron is obtained thereto. If, on immersing the copper plate in the solution, it be not immediately coated with a bright coating of iron all over, the bath is not in a proper condition, and the copper plate is to be removed and the iron plate attached and returned into the solution. The time occupied in obtaining a proper coating of iron to a printing surface varies from a variety of causes, but a workman after some experience and by careful attention will readily know when to remove the plate from the solution; and it is desirable to state that a copper plate should not be allowed to remain in the bath and attached to the negative pole of the battery after the bright coating of iron begins to show a blackish appearance at the edges. Immediately on taking a copper plate from the bath great care is to be observed in washing off the solution from all parts, and this may be most conveniently done by causing jets of water forcibly to strike against all parts of the surface. The plate is then dried and washed with spirits of turpentine, when it is ready for being printed from in the ordinary manner. The Bunsen's battery with the trough above described is as follows;—

Twenty elements in series of five; each element is composed of an

Earthen jar, 9 in., and $5\frac{3}{4}$ in. diameter.
Zinc ,, 8 in., 4 in. diameter, and $\frac{1}{8}$ in. thick.
Porous cell, $8\frac{1}{2}$ in., and $2\frac{3}{4}$ in. diameter.
Carbon ,, $9\frac{3}{4}$ in. by 2 in. in width, and 1 in. in thickness.

It should be observed that the battery will require attention when in use, as its action will diminish; the acids must therefore be removed gradually by adding fresh materials every two or three days. In order to remove the coating of iron from a printing surface after the iron coating has become worn, a solution which will act on the iron without attacking the printing surface is employed. In removing iron from copper, nitric acid is used diluted with eight parts of water, and care is to be taken to wash off the solution as soon as the iron is dissolved.

Works on Electro-Metallurgy:—A. Smee, 'Elements of Electro-Metallurgy,' 8vo, 1851. C. Walker, 'Electrotype Manipulation,' 18mo, 1851. J. Napier, 'A Manual of Electro-Metallurgy,' crown 8vo, 1860. H. Dircks, 'Contributions towards a History of Electro-Metallurgy,' crown 8vo, 1863. E. Lacroix, 'Études sur l'Exposition de 1867,' 4 vols., royal 8vo, 1867–68. A. Watt, 'Electro-Metallurgy Practically Considered,' 12mo, 1869. G. Gore, 'The Theory and Practice of Electro-Deposition,' crown 8vo. M. de Valicourt, 'Manuel du Galvanoplastie,' 2 vols., 18mo.

ELECTROMETER. Fr., *Électromètre;* Ger., *Electricitätsmesser;* Ital., *Elettrometro;* Span., *Electrómetro.*

See Telegraphy.

ELECTROTYPE. Fr., *Electrotype;* Ger., *Electrischer Abzug;* Ital., *Stereotipia galvanoplastiba;* Span., *Galvanoplastria.*

See Electro-Metallurgy.

ELEVATOR. Fr., *Élévateur;* Ger., *Aufzug;* Ital., *Elevatore;* Span., *Elevador.*

See Lifts; Hoists; and Elevators.

EMBANKMENT. Fr., *Levée de terre; Remblai;* Ger., *Erddamm;* Ital., *Argine; Terraplen.*

Railroad Cuttings and Embankments.—To find the contents of railway cuttings and embankments with accuracy is one of the most important problems in railroad engineering practice.

The first object to be acquired in preparing the dimensions of the different cross-sections is to reduce the irregular sections to a level, so that the level section may have the same area as the irregular one.

To draw a line F R, Fig. 2650, so that the area of any cross-section I G *a b c d* F H may be equal to the area of the figure H F R I requires but little engineering or geometrical skill; a thread

applied across the boundary, when the inequalities are not great, will, in most cases, be sufficient to determine F R. When the variations are great, the parallel ruler will determine F R, in a few seconds, with mathematical accuracy.

Thus draw $a s$ parallel to b G, and then draw $s b$; then the triangle $b s$ G $= b a$ G; through b

2650.

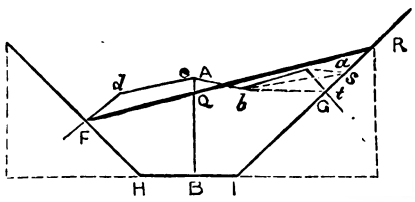

2651.

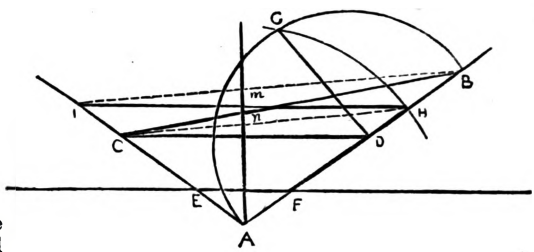

draw a line parallel to $c s$, join $t c$, as in the last case, and continue the process, until the line F R is determined.

The cross-section is easily reduced to the form F B C F, Fig. 2651; but to draw I H so that it may be parallel to E F, and that the area I H F E = F B C E, has employed the ingenuity of engineers without much accurate practical success, although the object may be thus easily obtained by construction.

2652.

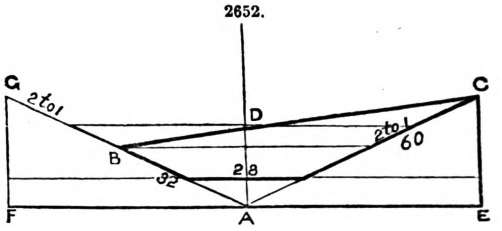

On A B describe a semicircle; draw C D parallel to E F, and D G perpendicular to A B; with A G describe the arc G H, through H draw H I parallel to C D; then the area of I H E F = area of B C E F, and A m is the height of the equivalent level cutting required. The same construction will suit for embankments. When this construction is performed accurately, then I B is parallel to C H. Hence the truth of the construction may be tested by taking a parallel ruler and finding whether the lines I B and C H are parallel or not; if these lines be not parallel, the construction must be repeated.

Example.—Let A B, Fig. 2652, be = 32 ft.; A C = 60 ft.; slopes 2 : 1 (A E : E C :: 2 : 1); required the length of A D.

$$\frac{60 \times 32}{5} = 384 = \text{the square of A D;}$$

therefore, A D $= \sqrt{384} = 19{\cdot}596$ ft., $1^2 + 2^2 = 5$, the number above divided by.

A rule much easier than this cannot be expected. We will apply it to another example in which the ratio of the slopes is expressed in more compound numbers.

Example.—Given A B (Fig. 2652) = 26 ft.; A C = 50 ft.; slopes $1\frac{1}{2}$ to 1 (A F : F G :: $1\frac{1}{2}$: 1); required A D.

$$\frac{3^2}{2} + 1^2 = \frac{13}{4} \qquad \frac{26 \times 50 \times 4}{13} = 400, \text{ the square of A D,} \qquad \therefore \text{A D} = \sqrt{400} = 20.$$

It generally happens that A B, Fig. 2653, the depth in or over the centre A, the breadth of the roadway E F, and the slopes of $f a$, F a, f E, are only given, and from which the depth D A of the equivalent level cutting is required. The point B may or not be in the surface of the ground. For example, in Fig. 2650 the point A represents the centre stake, and is in the surface of the ground, while Q, where P R meets A B, is below the surface of the ground; hence, the point B, in Fig. 2653, may be above or below the surface, as the case may be. This remark is important, as the position of the centre stake is so much referred to in setting out the side slopes; and, in fact, it is the point from which all measures are taken. When the height of the centre stake is known above or below the middle of the roadway, in cutting or embanking, the position of B in the line $f a$, that equalizes the surface, is not far from the centre stake in most cases. However, $f a$ is the line found by construction or otherwise that makes the area E F $a f$ = area E F P Q R. Q being the centre stake, and Q R and Q P, Fig. 2653, the lines that are used, to find the places of the side stakes R and P.

2653.

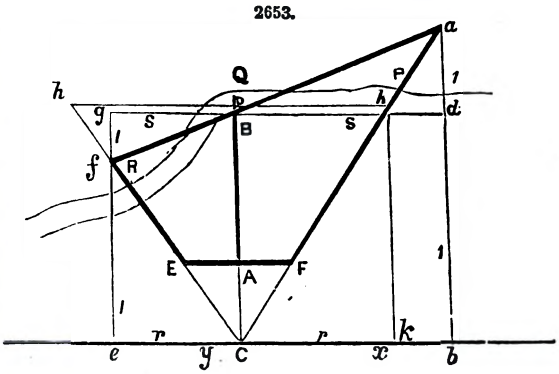

Let the slope of $f a$ be represented by s : 1, and of C f or C a by r to 1. Also let B C be represented by m, then, putting x = C b and y = C e, by similar triangles,

$$r : 1 :: x : \frac{x}{r} = ab; \qquad s : 1 :: x : \frac{x}{s} = ad;$$

$$\therefore m + \frac{x}{s} = \frac{x}{r}, \text{ and hence } x = \frac{rsm}{s - r} = \text{C}b.$$

Again, $r : 1 :: y : \frac{y}{r} = ef$; $\quad s : 1 :: y : \frac{y}{s} = gf$;

$$\therefore m - \frac{y}{s} = \frac{y}{r}, \text{ and } y = \frac{rsm}{s+r} = \text{C}c.$$

$$\frac{y}{r} = ef = \frac{sm}{s+r}; \qquad \frac{x}{r} = ab = \frac{sm}{s-r};$$

But on referring to Fig. 2653 it will be seen that

$$\text{C}a^2 = \text{C}b^2 + ab^2; \text{ and } \text{C}f^2 = \text{C}e^2 + ef^2;$$

$$\therefore \text{C}a = \sqrt{\frac{s^2m^2 + r^2s^2m^2}{(s-r)^2}}; \qquad \text{C}f = \sqrt{\frac{s^2m^2 + r^2s^2m^2}{(s+r)^2}};$$

But because the areas of the triangles Cfa and Chh are equal, and the side, Fig. 2653,

$$\text{C}h = \text{C}h, \qquad \text{Then, C}h = \sqrt{\text{C}f \times \text{C}a};$$

$$\therefore \text{C}h = \sqrt[4]{\frac{s^2m^2(1+r^2) \times s^2m^2(1+r^2)}{(s+r)^2 \times (s-r)^2}} = \sqrt{\frac{s^2m^2(1+r^2)}{(s+r)(s-r)}}.$$

$$\text{But C}h : \text{CD}(hk) :: \sqrt{(1+r^2)} : 1.$$

Hence, $\text{CD} = \frac{sm}{\sqrt{(s+r)(s-r)}}$ = the depth of the equivalent level cutting. This computation is easily effected by logarithms, the use of which are recommended when the numbers expressing the ratios of the slopes are compound.

Rule by Logarithms.—From the sum of the logarithms of s and m, take half the sum of the logarithms of $s + r$ and $s + r$, and the remainder is the logarithm of C D (Fig. 2653), *the depth of the equivalent cutting where the side slopes meet.*—This rule is the only simple and, at the same time, exact rule that has appeared. spite of the numerous controversies and the equally numerous books the problem has occasioned for many years.

2654.

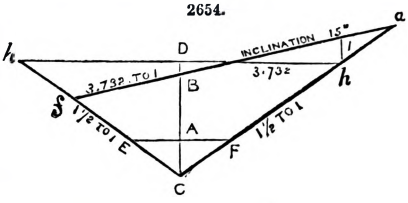

Example.—Let the roadway E F = 28 ft. wide, with the side slopes of 1½ : 1 and the ground to incline transversely at an angle of 15°; with a depth B A, at the station B, of 20 ft.; required A D the depth of the equivalent level cutting F E hh. See Fig. 2654.

Since the cotangent of 15° = 3·732, the inclination of fa is

3·732 to 1; hence $s = 3{\cdot}732$; $r = 1{\cdot}5$. $\qquad 1{\cdot}5 : 1 :: 14 : 9\frac{1}{3} = \text{A C}$.

$\therefore$ B C = $20 + 9\frac{1}{3} = 29{\cdot}333$.

3·732	3·732
1·500	1·500
$2{\cdot}232 = s - r$;	$5{\cdot}232 = s + r$;

Log. 2·232 = ·3486942	Log. 3·732 = ·5719416
log. 5·232 = ·7186677	log. 29·333 = 1·4673565
2)1·0673619	From 2·0392981
·5336809	Take ·5336809

C D = 32·034 logarithm = 1·5056172

9·333 = A C

22·701 = A D, required.

To find A D by common arithmetical calculation is not very difficult, especially when a table of squares, &c., of numbers is employed.

The general expression may be made to assume the form

$$\text{CD} = \frac{sm}{\sqrt{s^2 - r^2}}$$

Example.—Let the road be 36 ft. wide, with side slopes of 2 : 1, the ground to inclin transversely at a slope of 4 : 1; and the depth over the centre of the road, A B = 24 ft.; what is the depth of an equivalent level cutting?

$$2 : 1 :: \frac{36}{2} : 9 = \text{C A}.$$

24 = A B;	m = 33
9 = A C;	s = 4
m = 33 = B C.	132 = $m \times s$.

$$\sqrt{s^2 - r^2} = \sqrt{4^2 - 2^2} = \sqrt{12},$$

the square root of 12 can be found in the table = 3·464, which is taken sufficiently near for the purpose.

$$\frac{132}{3\cdot464} = 38\cdot103 = \text{C D.}$$
$$9\cdot000 = \text{C A.}$$
$$29\cdot103 = \text{A D.}$$

Example.—The breadth of the roadway is 25 ft., with side slopes of $2\frac{1}{2} : 1$; and a transverse ground slope of 6 : 1 (that is, the slope that equalizes the cross-sectional area); the depth of the station from the centre of the road = 15 ft., what is the depth of a level cutting of equal area?

$$2\tfrac{1}{2} : 1 :: \frac{25}{2} : 5 = \text{A C.}$$

$15 + 5 = 20 = m.$
$6 = s.$
$120 = m \times s.$

$6^2 = 36$
$(2\frac{1}{2})^2 = 6\cdot25$
$\sqrt{29\cdot75} = 5\cdot45.$

The square root of such numbers as 29·75 can be found by inspecting the table of squares, square roots, &c.

$$29\cdot75 \times 4 = 119.$$

The square root of 119 from the table = 10·9087121, the half of which = 5·454356, of which we have taken 5·45.

$$\frac{120}{5\cdot45} = 22\cdot02 = \text{C D.}$$
$$5\cdot00 = \text{A C.}$$
$$17\cdot02 = \text{A D.}$$

This calculation would be very concise, only the work is accompanied by explanations. Without such rendering the work might stand thus, as half the square root of 119 can be taken from the table without calculation.

$$\frac{25}{5} = 5 \qquad 6^2 - (\tfrac{5}{2})^2 = \frac{119}{4}$$
$$15$$
$$20$$
$$6$$

5·45)12000 (22·02
1090 5·00
1100 17·02 = A D.
1090
1000
1090

Example.—The breadth of the roadway is 27·8 ft., with side slopes of 36° 40′ and a transverse equalizing ground slope of 21° 15′; the depth of the station from the centre of the road 45·6 ft.; what is the depth of a level cutting of equal area?

Natural cotangent of 36° 40′ = 1·3432 = r
„ „ 21° 15′ = 2·5715 =
$s + r = 3\cdot9147$
$s - r = 1\cdot2283$

$$2r = \frac{27\cdot8}{2\cdot6864} = 10\cdot35 = \text{A C.}$$
$$45\cdot6$$
$$10\cdot35$$
$$55\cdot95 = m$$

Log. $r + s$ = ·5926985
log. $r - s$ = ·0893045
2)·6820030
·3410015

Log. m = 1·7478001
log. s = 0·4101865
From 2·1579866
Take ·3410015
log. 65·612 = 1·8169851

65·612
10·350
55·262 = A D,

the depth of a level cutting of equal area with the one defined in the question.

Example.—The breadth of the roadway = 33·7 ft.; the side slopes of an embankment are

19 : 7; and a transverse ground slope of 23 : 3; the depth of the embankment from the centre of the road = 18·4 ft.; what is the depth of the level embankment of equal cross-area?

$s = \frac{23}{3} = 7{\cdot}6667$

$r = \frac{19}{7} = 2{\cdot}7143$

$10{\cdot}3810 = s + r$

$4{\cdot}9524 = s - r$

Log. $s + r$ = 1·0162392
log $s - r$ = ·6948157

2)1·7110549

·8555274

$\frac{33{\cdot}7}{5{\cdot}4286}$ $\quad$ 6·2078
18·4000

24·6078 = m.

Log. m = 1·3910728
log. s = 0·8846085

From 2·2756813
Take ·8555274

Logarithm of 26·312 = 1·4201539

26·312
6·2078

A D = 20·1042 ft.

Construction.—When many constructions are to be made, section or cross-barred paper will be found very convenient. This paper is ruled, or rather printed from plates of steel or copper, to suit with great accuracy a variety of scales.

Take A C = 18·4 ft. and produce it both ways; draw E A F = 33·7 ft. and perpendicular to A C; A E = A F, Fig. 2655.

2655.

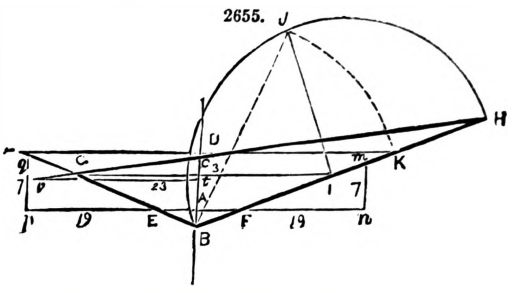

Produce A F to n and make F n = 19 on any convenient scale of equal parts, draw $m\,n$ perpendicular to F n and = 7 such parts, then draw B F m H, and in the same way draw B E G L. Again make C t = 3, and $t\,v$ perpendicular to it = 23, draw v G C H, and E F G H is the cross-section of the embankment. Draw G I parallel to E F, on B H describe the semicircle B J H, draw I J perpendicular to B H, and make B K = B J, draw K L parallel to E F, then the area F E G H = the level area L K F E and A D = 20·1 ft., as before found by calculation.

To find the Contents of Cutting and Embankments.—Let m be the breadth of the bottom of a level cutting at the rails; a, b, c, d, ... z, the perpendicular heights taken n feet apart; and r : 1 the ratio of the slopes; then

The content of the central part $= \frac{m\,n}{2}\left\{a + z + 2\,(b + c + d \ldots .)\right\}$; where a and z are the extreme ordinates, and b, c, d, e . . . . the intermediate.

The content of the two slopes $= \frac{n\,r}{3}\left\{(a+b)^2 + (b+c)^2 + (c+d)^2 \ldots . - [ab + bc + cd \ldots .]\right\}$

Example.—Required the solid content of a cutting or embankment A B C D E F G H, Fig. 2656, whose heights taken at 1 chain of 66 ft. apart are 30 ft. = a, and 20 ft. = b; the width of the rails = 36 ft. = m; the slopes 2 to 1.

In this example r : 1 becomes 2 : 1; n = 66 ft.

The general formula becomes $\frac{m\,n}{2}\left\{a + b\right\} + \frac{n\,r}{3}\left\{(a + b)^2 - a\,b\right\}$, when two ordinates, a and b, are used.

20	$a + b$ =	50
30		50 = $a + b$
50		2500
66	30 × 20 =	600 = $a\,b$
3300		1900
36		2 = r
19800		3800
9900		66 = n
2)118800		22800
		22800
A B P N K F G I =	59400 cub. ft.,	3)250800
		83600 = cubic feet in P B C H I G and A N D E K F together.
83600		
59400		
143000 = whole content in cubic feet.		

2656.

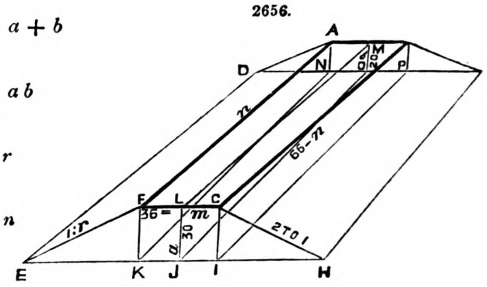

This number divided by 27 gives 5296·296, the content in cubic yards. We have used no help to contract the process, in order that the nature of the problem may be thoroughly understood.

Example.—Let the cubical content of the cutting or embankment mentioned in the last example be required, when n = 100 ft.

$a = 20$
$b = 30$

2)50

25 × 100 = 2500 =
2500
36

15000
7500

90000 = cubic feet in A B P N K F G I.

50 $= a + b$
50

2500 $= (a + b)^2$
$a\,b =$ 600

1900
2 $= r$

3800
100 $= n$

3)380000 = 126666·66 cub. ft., the content of the two slopes.

90000
126666·66

27)216666·66

8024·7 whole content in cubic yards.

Now observe how easily this result can be obtained when the former 5296·296 is found for a chain of 66 ft.

5296·296
half = 2648·148

Passing two figures to left each time ..
7944·444 for 99 ft.
79·444
·794
7

8024·689

Consequently, if any cubic yards as 90000 be for a 66-ft. chain,

90000
45000

135000
1350
13·5
·1

136363·6

will be the cubic yards for 100 ft. This result is obtained without mental labour.

Example.—Required the cubical content of these cuttings by inspecting the following Tables (I., II., and III.);—

First for n = 66 ft.
20
30

2)50

25 × 36 = 900 ft.

From the small Table (I.), for an area of 900 sq. ft., there is given 2199·9999 cub. yds., which may be taken as 2200 cub. yds.

In the large Table (III.), over 20 and opposite 30 will be found

1548
2 = r

3096
2200

5296 cub. yds.,

the same whole number of yards as these before found, according to the formula.

TABLE I.—For 66 feet.

1	2·4444444
2	4·8888888
3	7·3333333
4	9·7777777
5	12·2222222
6	14·6666666
7	17·1111111
8	19·5555555
9	21·9999999

When the cubic content in yards for a chain of 66 is known, the content for a chain of 100 is found instantly, as before shown.

5296
2648

7944· for 99 ft.
79·44
·79

8024·23 for 100 ft.

When the work is not encumbered by explanations, the ease of application is very apparent, as the following examples will show.

Example.—Let the equivalent level cutting at one end have a particular height J L = 25 ft., Fig. 2656; at the other end, O M = 20. What is the cubical content for lengths of 100 ft., 66 ft., and 50 ft., the roadway 28 ft. wide and the side slopes 1½ to 1?

From Table I.

25
20

45
14 = half 28.

180
45

630

For 600 .. .. 1466·6666
„ 30 .. .. 73·3366

1540·

Table III.

Opposite 25 under 20 .. .. 1343· / 621· } $r = 1\frac{1}{2}$

1864
1540

For a length of 66 ft. .. .. 3404 cub. yds.

3404
1702

For 99 ft. 5106
51·06
51

For 100 ft .. .. .. 5157·57 cub. yds.

2)5157·57 for 100 ft.

2578·78 for 50 ft.

Hence, if 25 and 20 be the heights of a filling or the depths of a cutting,

Cub. yds.
For 66 ft., the content = 3404·
„ 100 ft., the content = 5157·5
„ 50 ft., the content = 2578·8

It is easily seen by a practical civil engineer that this is the best and easiest method of finding the solid content of cuttings or embankments yet proposed, whether the chain be 100 ft. long, 66 ft., or 50 ft.

The content for any other distance, as 121·3 ft., is also readily determined, thus;—

For 100 ft. .. .. 5157·5
„ 1 ft. .. .. 51·575
121·3

154725
51575
103150
51575

For 121·3 ft. .. .. 6256·0475

Any other length may be applied in the same manner.

Example.—Let 16 ft. be the height of a level filling, which has the same area as the cross-section at this station; 100 ft. from this the height of the level filling is found to be 14 ft.; how many cubic yards of earth does it contain, the ratio of the side slopes ¾ to 1, breadth of the roadway = 32 ft.?

From Table II., which is for finding the content of the central part for lengths of 100 ft., will be found the content of the central part, thus;—

14
16

2)30

15
32 = breadth of roadway.

30
45

480

For 400 .. .. 1484·481
„ 80 .. .. 296·296

Cubic yards 1777·777

Table II.—For 100 feet.

1	3·703703
2	7·407407
3	11·111111
4	14·814814
5	18·518518
6	22·222222
7	25·925925
8	29·629629
9	33·333333

Table III.

For the content of the two slopes and a length of 66 feet

Opposite 16 over 14	551		413·25
	$\frac{3}{4} = r$.	half =	206·625
	413·25		619·875
			6·198
			61
			626·134
		Cubic yards	1777·777 for 100 ft.
			2403·911 whole content.

Example.—Suppose the equivalent level cutting at one end to be 24 ft., and at the other 36; the roadway 31 ft. wide; the length of the cutting 100 ft., the side slopes $1\frac{1}{2}$ to 1; required the cubical content in cubic yards.

24	
36	
2)60	
30	
31	breadth of roadway.
930	

From Table II.

For 900	3333·333
„ 30	111·111
	3444·444

From Table III.

Opposite 36 over 24	2229
	4
$r = \frac{1}{3}$	3)8916
For 66 ft.	2972
half =	1486
	4458
	44·58
	·45
For 100 ft.	4503·03
	3444·44
Total content =	8947·47

Example.—Let a cutting be in every respect the same as the last, only the length = 66 ft.; what is the cubical content?

36 + 24 = 60	
31	= breadth of roadway.
60	
180	
2)1860	
930	

From Table I.

For 900	2200
„ 30	73·33
	2273·33

Opposite 30 over 24	2229
	4
$r = \frac{1}{3}$	3)8916
	2972
	$2273\frac{1}{3}$
Total content for 66 ft.	$5245\frac{1}{3}$

As all the figures employed are set down, it is evident that this plan is superior to any other proposed method, as but one-tenth the mental labour is expended.

What is the content for 12·3 ft. when the content for a length of 66 ft. = 5245·33 cub. ft.?

5245·33	79·4747
2622·66	12·3
7868·00	2284241
78·68	1589494
78	794747
7947·47 for 100 ft.	Cubic feet 876·53881 for 12·3 ft. length.
79·4747 for 1 ft.	

Example.—Required the cubical content by the general formula.

$$\frac{m\,n}{2}(a+b) + \frac{n\,r}{3}(a^2 + a\,b + b^2).$$

59	60	61	62	63	64	65	66	67	68	69	70	71
8516												
8653	8800											
8800	8946	9097										
8948	9197	9246	9397									
9097	9248	9398	9548	9702								
9252	9400	9550	9702	9858	10012							
9404	9554	9705	9858	10012	10169	10327						
9558	9708	9862	10017	10171	10327	10486	10647					
9717	9866	10020	10172	10328	10488	10647	10809	10972				
9872	10028	10180	10334	10410	10650	10810	10972	11136	11304			
10034	10186	10334	10498	10652	10814	10974	11136	11304	11468	11638		
10194	10352	10504	10660	10818	10978	11140	11306	11470	11640	11808	11978	
10356	10512	10670	10824	10984	11145	11310	11474	11640	11808	11979	12150	12322
10522	10678	10834	10994	11150	11316	11478	11647	11812	11982	12152	12324	12496

To face p. 1

$a = 24$; $b = 36$

$r = 1\frac{1}{2}$; $m = 31$; $n = 100$ ft.

$$\frac{31 \times 100}{2} \times (24 + 36) = 93000$$

24
36

$(a + b)^2 = 60^2 = 3600$
$a \times b \quad = \quad 864$

$a^2 + a\,b + b^2 = 2736$
4

3)10944

3648
100

3)364800

121600
93000

Content in cub. ft. = 214600

27)214600(7948
189

256
243

130
108

220
216

The difference existing between the result obtained by using the Tables and the result given by the formula is but very small for so large a content.

It arises from the results given in Table III. being whole numbers without decimals. In fact, Table III. contains the content in cubical yards to the nearest unit, and the depths of the level cuttings have all the integral values from 1 to 70.

When decimals are annexed, the additional cubical content is found by consulting Table IV. The method of using this Table will best appear from example.

Example.—Let $a = 52{\cdot}6$ ft.; $b = 30{\cdot}4$; the slopes 2 : 1; the breadth of the roadway 36 ft.; length 66 ft.: what is the content in cubic yards?

52·6
30·4

83·0
18 = half 36.

664
83

1494

From Table I.

For	1000	2444·444
„	400	977·777
„	90	219·999
„	4	9·777
		3651·997

Table III.

Opposite 52 under 30 4208

To find what must be added for decimals (·6) and (·4) employ

Table IV.

52·6
2

$105{\cdot}2 = 2\,a$
$30{\cdot}4 = b$

$135{\cdot}6 = 2\,b + a$
$13{\cdot}56 = \frac{2\,b + a}{10}$

The nearest whole number to which is 14.

Opposite 14 and under ·6 68

$30{\cdot}4 = b$
2

60·8
$52{\cdot}6 = a$

$11{\cdot}34 = \frac{2\,b + a}{10}$

The nearest whole number to which is 11.

Opposite 11 and under ·4 36

4208
68 } add
36 }

4312
$2 = r$

add { 8624
3652

12276 cubical content for a length of 66 ft.

TABLE IV

	·1.	·2.	·3.	·4.	·5.	·6.	·7.	·8.	·9.		·1.	·2.	·3.	·4.	·5.	·6.	·7.	·8.	·9.
1	1	2	2	3	4	5	6	7	7	12	10	20	29	39	49	59	69	78	88
2	2	3	5	7	8	10	11	13	15	13	11	21	32	42	53	63	74	85	95
3	2	5	7	10	12	15	17	20	22	14	11	23	34	46	57	68	80	91	103
4	3	7	10	13	16	20	23	26	29	15	12	24	37	49	61	73	86	98	110
5	4	8	12	16	20	24	29	33	37	16	13	26	39	52	65	78	91	104	117
6	5	10	15	20	24	29	34	39	44	17	14	28	42	55	69	83	97	111	125
7	6	11	17	23	28	34	40	46	51	18	15	29	44	59	73	88	103	117	132
8	7	13	20	26	33	39	46	52	59	19	16	31	47	62	77	93	108	124	139
9	7	15	22	29	37	44	51	57	66	20	16	33	49	65	82	98	114	130	147
10	8	16	25	33	41	49	57	65	73	21	17	34	51	68	86	103	120	137	154
11	9	18	27	36	45	54	63	72	81										

If the length = 100 ft. with the other dimensions remaining the same, the content will be

12276
6138

18414·
184·14
1·84

For 100 ft. 18599·98 cub. yds.

These results do not differ from those obtained with mathematical accuracy more than 2 yds., according to the formula.

$$\frac{n\,m}{2}\left\{a+b\right\}+\frac{n\,r}{3}\left\{(a+b)^2-a\,b\right\}$$

$a = 52{\cdot}6$, $b = 30{\cdot}4$. $m = 36$; $n = 66$; all in feet; $r = 2$.

$$\frac{36\times 66}{2}\times(52{\cdot}6+30{\cdot}4)=36\times 33\times 83=98604.$$

52·6
30·4

83·0
83·

249
664

6889 $= (a+b)^2$
30·4 × 52·6 = 1599·04 $= a\times b$

5289·96
2 $= r$

10579·92
22 $= \frac{n}{3}$

2115984
2115984

232758·24 $= \frac{r\,n}{3}(a^2+a\,b+b^2)$
98604·

27)331362·26
27

61 {12273, the true content
54 { in cubic yards.

73
54

196
189

72
81

We will next give a model example, merely setting down the numbers employed in the operation.

Example.—Let the depths of a cutting be 39·3 and 37·7 ft.; their distance = 66 ft.; the ratio of the slopes $1\frac{1}{2}$ to 1; what is the content? Bottom width = 33.

39·3
37·7
77·0
33
231
231
2)2541·
1270·5

Table I.

For 1000	.. ..	2444·444
„ 200	.. ..	488·888
„ 70	.. ..	171·111
„ ·5	.. ..	1·222
		3105·666

Table IV.

Opposite 12 under ·3 29

37·7*
2
75·4
39·3

$\frac{2b+a}{10} = 11{\cdot}47$

Table III.

Opposite 39 over 37 3531

39·3*
2
78·6
37·7

$\frac{2a+b}{10} = 11{\cdot}63$

Opposite 11 under 7 63

3531
29
63
3623 $r = \frac{3}{2}$
3
2)10869
5434·5
3105·66

Content 8540·16 cub. yds.

Let $a = 7{\cdot}1$; $b = 6{\cdot}8$; $c = 5{\cdot}3$; $d = 7{\cdot}6$; $e = 11{\cdot}5$; these depths are at 100 ft. apart; the breadth of the roadway = 30 ft.; and the side slopes 3 : 2, or $\frac{3}{2}$: 1.

$r = \frac{3}{2}$; $m = 30$; $n = 100$.

General formula

$$\frac{mn}{2}\left\{a+e+2(b+c+d)\right\}+\frac{nr}{3}\left\{(a+b)^2+(b+c)^2+(c+d)^2+(d+e)^2-(ab+bc\ cd+de)\right\}.$$

58
100 = n
5800
30 = m
2)174000
87000

$b = 6{\cdot}8$
$c = 5{\cdot}3$
$d = 7{\cdot}6$
19·7
2
39·4
7·1 = a
11·5 = e
58·0

$(a+b)^2 = (7{\cdot}1 + 6{\cdot}8)^2 = 13{\cdot}9^2 = 193{\cdot}21$
$(b+c)^2 = (6{\cdot}8 + 5{\cdot}3)^2 = 12{\cdot}1^2 = 146{\cdot}41$
$(c+d)^2 = (5{\cdot}3 + 7{\cdot}6)^2 = 12{\cdot}9^2 = 166{\cdot}41$
$(d+e)^2 = (7{\cdot}6 + 11{\cdot}5)^2 = 18{\cdot}1^2 = 327{\cdot}61$
833·64

$48{\cdot}28 = a \times b = 7{\cdot}1 \times 6{\cdot}8$
$35{\cdot}04 = b \times c = 6{\cdot}8 \times 5{\cdot}3$
$40{\cdot}28 = c \times d = 5{\cdot}3 \times 7{\cdot}6$
$87{\cdot}40 = d \times e = 7{\cdot}6 \times 11{\cdot}5$
211·00

833·64
211·00
622·64
100
62264·
$\frac{3}{2} = r$
2)186792
3)93396
31132
Add 87000
118132 cub. ft.

The formula is convenient when the numbers are small and a table of the squares and products of numbers convenient.

To find the Solid Content of a Railroad Cutting or Embankment, when great accuracy is required.—*Rule.*—Add together the area of two parallel cross-sections, and four times the area of a section half-way between and parallel to them; and multiply the sum by one-sixth of the length measured perpendicularly to the parallel sections, and the product is the solid content required.

Example.—Let the area of the cross-section A, Fig. 2657, = 2675 sq. ft.; B = 2540 sq. ft.; C = 2489 sq. ft.; the distance D E = E F = 50 ft. or the distance between A and B = 100: what is the content?

2657.

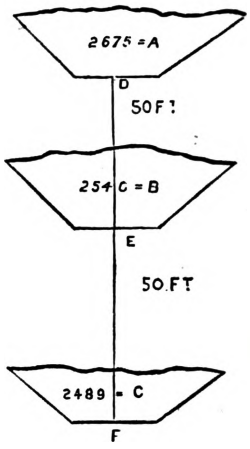

$$\begin{array}{r} 2540 = B \\ 4 \\ \hline 10160 \\ 2675 = A \\ 2489 = C \\ \hline 6)15324 \\ \hline 2554\cdot \\ 100\cdot \\ \hline 255400\cdot \text{ cub. ft.} \end{array}$$

$$\frac{255400}{27} = 9459\cdot2 \text{ cub. yds.}$$

The Tables will determine the content with the same accuracy as the general rule just given, without the middle area being given.

Example.—Let the areas of the two ends of a cutting be 4990 and 1294 sq. ft., the bottom width 30 ft., the length 1·60 chain, and the ratio of the slopes $1\frac{1}{2}$ to 1; required the content of the cutting in cubic yards by referring to the Tables.

In applying the Tables to such examples, the square roots of the areas, to where the slopes meet, must be first extracted, or, which is more easy, taken from a table of square roots.

$1\frac{1}{2} : 1 :: \frac{30}{2} : 10$ ft., the depth below the roadway where the slopes meet, $\frac{30 \times 10}{2} = 150$ sq. ft., the area of the triangle, to be added to the areas of the cross-sections.

$$\begin{array}{rcr} 4990 & & 1294 \\ 150 & & 150 \\ \hline 5140 & \text{and} & 1444 \end{array}$$

the areas of the sections to where the slopes meet. The square roots of these numbers are 71·7 and 38· respectively.

$$\begin{array}{lr} \text{By Table III., for 71 and 38 .. ..} & 7483 \\ \text{By Table IV., for } \frac{71 \times 2 + 38}{10} = 18\cdot \text{ and } (\cdot7) \text{ .. ..} & 103 \\ \hline \text{Content to the intersection of slopes .. ..} & 7586 \\ \text{Take the content from roadway to where the slopes meet} = \frac{150 \times 66}{27} = & 366\frac{2}{3} \\ \hline \text{Content for one chain .. ..} & 7219\frac{1}{3} \end{array}$$

$$7219\tfrac{1}{3} \times 1\cdot60 = 11550\cdot933 \text{ cub. yds.}$$

Example.—Let the areas of the two ends of a cutting be 3645 and 4036 sq. ft.; the bottom width 27·2 ft.; the length 17·6 ft.; the ratio of the slopes 1·7 to 1; required the content of this cutting by the help of the Tables. $1\cdot7 : 1 :: \frac{17\cdot2}{2} : 8$ ft., the depth below the roadway where the slopes meet. $\frac{27\cdot2 \times 8}{2} = 108\cdot8$ sq. ft., to be added to the areas of the cross-sections. The solid content of the wedge below the roadway to where the slopes meet, for a chain = 66, in length = $\frac{108\cdot8 \times 66}{27} = 265\cdot9$ cub. yds.

It is necessary to make these little preliminary calculations before applying the Tables, in such general examples as the one we have given above.

$$\begin{array}{rr} 3645 & 4036 \\ 108\cdot8 & 108\cdot8 \\ \hline \sqrt{3753\cdot8} = 61\cdot3; & \sqrt{4144\cdot8} = 64\cdot4. \end{array}$$

When one or both the given depths, or square roots, exceed the limits of Table III., find the

content corresponding to half the two depths, and four times the result will be the content required.

By Table III., for 64 and 61	9550·
Table IV., $\frac{61{\cdot}3 \times 2 + 64{\cdot}4}{10} = 19$ and 3	47
$\frac{64{\cdot}4 \times 2 + 61{\cdot}3}{10} = 19$ and ·4	62·
Content to intersection of slopes	9659·
Content from roadway to the intersection of slopes ..	265·9
	9393·1

Cubic yds.

9393·1 for 66 feet
4696·5

14089·6
140·9
1·4

142·319 for 100 feet
142·319 for 1 foot.

$$142{\cdot}319 \times 17{\cdot}6 = 2504{\cdot}8140,$$

the content in cubic yards for the distance given in the example.

To find the Content of a Railroad Cutting, when the Slopes of the Two Sides are different.—Rule.—Find the content as if one of the slopes were given; take half the result and add it to half the content found by supposing the other slope only given; the sum will be the content required.

Example.—One side of a cutting has a slope of $1\frac{1}{2}$: 1, the other side a slope of $1\frac{1}{4}$: 1; the heights of the equivalent level cross-sectional areas, taken 100 ft. apart, are 13 and 11 ft.; the breadth of the roadway = 30 ft., what is the content in cubic yards?

11	For 300·	1111·111
13	60·	222·222
2)24		1333·333 cub. yds. in the central part.
12		
30		
360		

For 13 and 11 in Table III., 353· for 66 feet.

$1\frac{1}{4}$	353
$1\frac{1}{2}$	11
$2)2\frac{3}{4}$	8)3883
$1\frac{3}{8} = \frac{11}{8}$	485·4
	4·85
	4
Slope $1\frac{3}{8}$: 1, length 100 feet,	490·3 cub. yds.

1333·3
490·3

Content 1823·6 cub. yds.

2658.

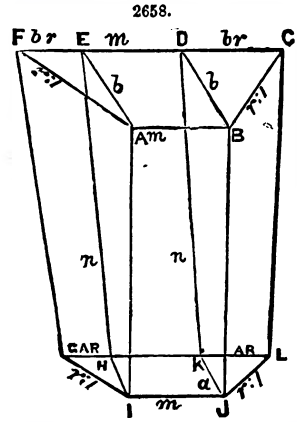

Investigation of the General Formula for Calculating the Content of Cuttings and Embankments.—Let A B C D E F G H I J K L, Fig. 2658, be a railroad cutting; the planes A B C F and L G I J perpendicular to the plane of the roadway 1 J B A. Then D B = E A = b and K J = 1 H = a are perpendicular to 1 A and B J.

The sides J L C B and I G F A slope till their bases are to their perpendiculars as r : 1. A E and B D are perpendicular to C F, and J K and 1 H perpendicular to G L.

B D : D C :: 1 : r, the same proportion holds in the other right-angled triangles A E F, I G H, and K J L.

$$\therefore \quad EF = DC = br. \qquad GH = KL = ar.$$

The length of the cutting J B = 1 A = n, the breadth of the roadway A B = I J = m. Fig. 2658.

The two slopes of Fig. 2659 put together make up the frustum of a pyramid F B C L J G, represented in Fig. 2660. The centre part E D B A I F is given in Fig. 2659, the content of which we will find first.

Let the plane R S T U, Fig. 2659, be parallel to the ends and half-way between them; and

M S O P T N parallel to the road plane A B I J; then the solid I H E D K J = the solid I M O P K J $= \frac{a+b}{2} \times m \times n = \frac{mn}{2}(a+b)$.

2659.

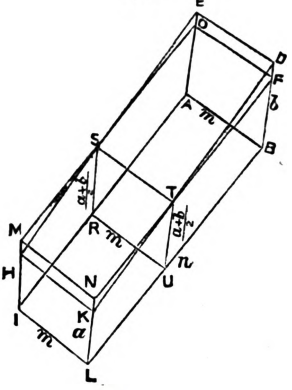

2660.

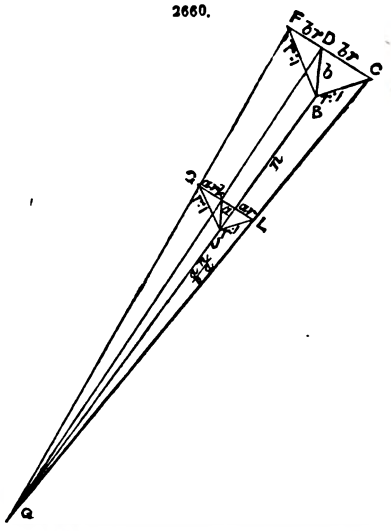

From this formula Tables I. and II. are calculated, taking $n = 66$ and $n = 100$, and dividing by 27 to reduce the content to cubic yards. We will next find the content of the two slopes, Fig. 2660.

$b - a : n :: a : \frac{na}{b-a} = \text{J Q}$. $\text{B Q} = n + \frac{na}{b-a} = \frac{nb}{b-a}$. $b^2 r$ = area of the triangle B C F.

$$\tfrac{1}{3} \times \frac{nb}{b-a} \times b^2 r = \text{content of the pyramid F B C Q} = \frac{nr}{3}\left(\frac{b^3}{b-a}\right).$$

Area of the triangle J G L $= a^2 r$, hence the content of the pyramid O G L J =

$$\tfrac{1}{3} \times \frac{na}{b-a} \times a^2 r = \frac{nr}{3}\left(\frac{a^3}{b-a}\right).$$

Consequently, the solid content of the frustum J G L C F B =

$$\frac{nr}{3}\left(\frac{b^3 - a^3}{b-a}\right) = \frac{nr}{3}(b^2 + ab + a^2) = \frac{nr}{3}\left\{(a+b)^2 - ab\right\}.$$

From this expression Table III. has been calculated, taking $n = 66$ ft. and dividing by 27 to reduce the content to cubic yards. The general formula is readily found by taking the sum of the expressions.

$$\frac{mn}{2}(a+b) + \frac{nr}{3}\left\{(a+b)^2 - ab\right\}$$

$$\frac{mn}{2}(b+c) + \frac{nr}{3}\left\{(b+c)^2 - bc\right\}$$

$$\frac{mn}{2}(c+d) + \frac{nr}{3}\left\{(c+d)^2 - cd\right\}$$

&c. + &c., which becomes

$$\frac{mn}{2}\left\{a + z + 2(b + c + d \ldots) + \right.$$

$$\left. \frac{nr}{3}\left\{(a+b)^2 + (b+c)^2 \times (c+d)^2 + \ldots . - [ab + bc + cd + \ldots .]\right\}\right.$$

the general formula that we proposed to demonstrate. We will add an example that often occurs in practice; when cuttings or embankments are measured after the work is done, the sides have different slopes from one another, and from those intended to be given. To find the content of such, the following rule may be useful.

Rule.—Find the content of the centre portion, as in the preceding examples; in finding the content of the two slopes, employ half the sum of the ratios (the consequents being unity), instead of the constant ratio used in other cases.

Example.—Let the bottom width = 36 ft.; the depths of the level equalized cross-sections = 20 and 30 ft. respectively; one of the side slopes 1½ to 1, the other 2 to 1; what is the content, in cubic yards, for a length of 100 ft.?

$$\begin{array}{r} 2 \;:\; 1 \\ 1\tfrac{1}{2} \;:\; 1 \\ \hline 2)3\tfrac{1}{2} \\ \hline 1\tfrac{3}{4} \;:\; 1 = r \;:\; 1. \end{array}$$

$\frac{36 \times 100}{2} \times (20 + 30) = 90000$ cub. ft. in the central part.

20
30
—
$50^2 = 2500 =$ $+ b)^2$
—
$20 \times 30 = 600$
—
1900 $= a\,b + a^2 + b^2$
100
—
190000
7 $r = \frac{7}{4}$
—
4)1330000
—
3)332500
—
110833·3 cub. ft. in the side slopes.
90000·
—
27)200833·3(7438·2
189
—
118
108
—
103
81
—
223
216
—
73
54

By the Tables.—Table III.—For 30 and 20 will be found 1548; this is for a length of 66 ft.

1548
774
—
for 99 ft. 2322
23·22
·23
—
for 100 ft. 2345·45
7 $r = \frac{7}{4}$
—
4)16418·15
—
4104·54
3333·33 found in Table II. for 9000.
—
Cubic yards 7437·87

20
30
—
2)50
—
25 × 36 = 9000.

By inspecting the Tables the content is found to be 7437·87 cub. yds.; by the formula the content is 7438·2 cub. yds.; the difference is less than half a cubic yard.

Side Depths and Side Stakes.—When the centre stumps of a railroad have been put down, which are usually at the distance of one chain, the line must next be levelled, and the number of the stumps entered in the level-book in a vertical column; and opposite each number, in another column, the depth of the cuttings or embankments; and in a third column, the horizontal half-width of the surface cuttings. But every engineer has his peculiar method of keeping a field or level book.

To set out the width of cuttings, when the surface of the ground is laterally level, and at a given height above the level of the intended railroad, the ratio of the slopes being given, let A B D H, Fig. 2661, be the cross-section of a cutting, the ground H D parallel to the bed of the

road A B; put C F, the height, in the centre of the road = h, and the breadth of the road-bed A B = b; the slope of the side A H or B D is generally expressed by the ratio of the base B I to the perpendicular I D; let B I : I D = $m : n$, then the slopes are said to be $m : n$, or $\frac{m}{n}$.

In this case, as it is supposed the ground H D is level, the distance from the centre F to the side stakes D and H will be expressed by $\frac{1}{2}b + \frac{m}{n}h$.

Example.—Let the bottom width A B = 28 ft., the depth of the cutting C F = 16 ft., the slopes 5 : 4; that is, B I : I D = 5 : 4; required the distance of the side stakes H and D from the centre F.

$$H F = \tfrac{1}{2} \text{ of } 28 + \tfrac{5}{4} \text{ of } 16 = 34 = F D.$$

2661.

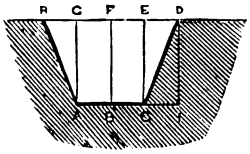

2662.

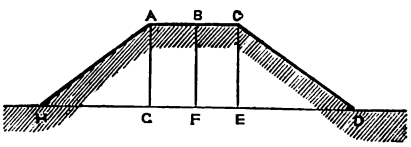

Example of embankment, when the surface of the ground is laterally level, Fig. 2662. Suppose the breadth of the roadway A B = 32 ft.; the height of the embankment C F = 20 ft., and the ratio of the slopes 6 to 5, that is, D E : E B = 6 : 5; required the distance of the side stakes H and D from the centre F.

$$H F = \tfrac{1}{2} \text{ of } 32 + \tfrac{6}{5} \text{ of } 20 = 40 = F D.$$

The slope given to the sides of either cuttings or embankments varies with the material through which the road has to pass.

When B I = I D, Fig. 2661, the slope is said to be 1 : 1. The slope is said to be a rise of 2 to 1 when I B = twice I D. In close-jointed rock the ratio varies from 1 : 4, to 1 : 2. In soft or loose-jointed rock, or stiff clay, the ratio varies from 1 : 1, to 3 : 2. If the road passes through moist springy ground or loose sand, the ratio of the slope varies from 2 : 1 to 5 : 2. Should the ground rise from F to M, Fig. 2663, the slope stake must be set out farther, as at M. Let the additional height M N = p, then D N = $\frac{m}{n}p$. And if the ground falls from F to K, a distance L K = q, the slope stake must be set farther in at K, a distance H L = $\frac{m}{n}q$.

$$\therefore F N = \tfrac{1}{2}b + \frac{m}{n}h + \frac{m}{n}p. \qquad F L = \tfrac{1}{2}b + \frac{m}{n}h - \frac{m}{n}q.$$

2663.

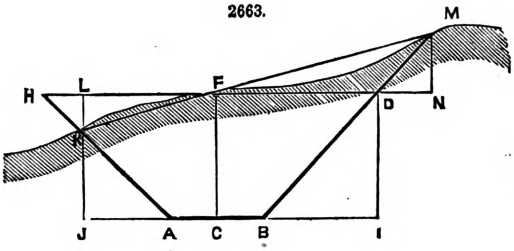

2664.

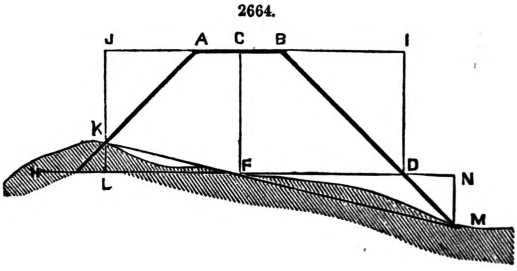

It often happens that p and q are unequal. Setting slope stakes for embankments resembles setting them for excavations, only a rise from the centre F with excavations corresponds to a fall with embankments; in fact, an embankment is a cutting inverted. Fig. 2664 represents an embankment, and is Fig. 2663 inverted. The rise at K is nearer the centre F, than H on the level, in an embankment, Fig. 2664; while the fall at K is nearer the centre F, than H on the level with F, in an excavation, Fig. 2663.

Example.—In the cutting, Fig. 2663, and in the embankment, Fig. 2664,

Let A B = b = 30 ft. K L = q = 4 ft.
C F = h = 18 ft. $m : n$ = 3 : 2.
M N = p = 6 ft.

$$3 : 2 = B I : I D = A I : J K = D N : N M = H L : L K.$$

Consequently,

$$F N = \frac{30}{2} + \frac{3 \times 18}{2} + \frac{3 \times 6}{2} = 51 \text{ ft.} \qquad F L = \frac{30}{2} + \frac{3 \times 18}{2} - \frac{3 \times 4}{2} = 36 \text{ ft.}$$

As the ground continues to slope up or down from F, the centre stake, the positions of M and K are often determined on the ground by a series of trials, or fudged out in an office by some clumsy mechanical construction or other. To avoid guessing, or rule-of-thumb operations, we will lay down a practical exact plan by which the positions of the side stakes K and M may be easily found. The

positions of D and H on a level with F, the centre stake, can be accurately calculated when the height C F, breadth A B, and ratio of B I to I D are given, therefore it is known, very nearly, where the lines A K and B M strike the surface of the earth. And as F K and F M are seldom in the same straight line, it is more accurate to find the ratio of F L to L K as well as the ratio of F N to N M, Fig. 2665. When these ratios are known, which may be readily found by a level and target-rod, the distance of M from F and of K from F are easily calculated.

2665.

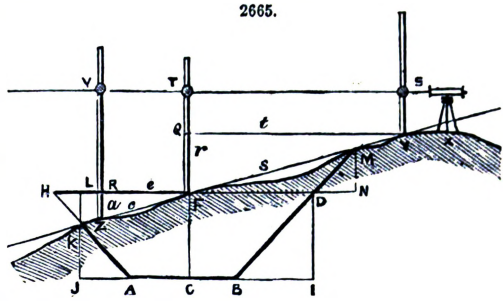

In the neighbourhood of M and K there are always short spaces before or behind M and K, in the directions of the lines K F and F M, and it does not matter how irregular the surface is between these points. It is not necessary that the spaces before or behind K and M are level or not, so that they are nearly in the directions of F M and F K. Set up and adjust the level at any convenient place X, outside the cross-section; place the target-staff at Y, as near as you are able to judge to the required point M; read off the height S Y; remove the staff to the centre stake F, and read off the height F T; the difference between S Y and F T will give Q F, which put = r, measure Y F, and put s = Y F. If the distance Q Y be not great, it may be measured by the same tape or chain that takes the length of F Y; or Q Y may be calculated, for Q Y = $\sqrt{s^2 - r^2}$, which put = t to make the reasoning more concise.

Then the three sides of the triangle Q F Y become known; this triangle is similar to the triangle F N M, and hence

$$\text{F N} : \text{N M} :: t : r, \qquad \text{F N} : \text{F M} :: t : s, \qquad \text{F M} : \text{M N} :: s : r;$$

because the three sides of the triangle, Y F, Q F, Q Y, are respectively represented by the three known quantities, s, r, t. Two of these quantities, s and r, may be measured in links or feet on the ground, and the third side may be measured or calculated according to the circumstances of the case. Again, place the target-staff at Z as near the required point K as you are able to judge; but it does not matter where it is placed, as I have before observed, so that it is in the line F K. Then read off the height Z V without changing the position of the instrument at X; from the height Z V take T F, the remainder Z R is one of the sides of the triangle F Z R; put this known height Z R = a; measure Z F with a tape or chain, and put it = c; R F may be measured and put = e, or calculated, for $e = \sqrt{c^2 - a^2}$. As on the other side of the centre F, the triangle F R Z is similar to the triangle F L K. Hence F K : K L : L F = $c : a : e$.

To render this method of proceeding as clear as possible we have dwelt on every point of the process, so that there could be no misunderstanding. This subject has been treated by writers in a most slovenly manner; and by most of the empirical rules laid down by them it takes three or four trials to determine the position of a side stake.

Let K F = x and F M = y. A B = b; F C = h; B I : I D = $m : n$.

And as we have just found by the level and target-staff that

$$\text{F N} : \text{N M} = t : r, \qquad \text{F M} : \text{F N} = s : t;$$

Also,

$$\text{F L} : \text{L K} = e : a, \qquad \text{F K} : \text{K L} = c : a.$$

We have selected these measures in the most general manner, in order that the result may embrace all like cases.

$$c : a :: x : \frac{a\,x}{c} = \text{K L}. \qquad \text{K L} : \text{L H} = \text{K J} : \text{J A} = n : m; \qquad \therefore \frac{a\,x}{c} : \text{L H} :: n : m; \text{ or } \frac{a\,m\,x}{c\,n} = \text{L H}.$$

$$\text{F H} - \text{H L} = \text{L F}. \qquad \text{F H} = \tfrac{1}{2}b + \frac{m\,h}{n}; \qquad \therefore \text{L F} = \tfrac{1}{2}b + \frac{m}{n}h - \frac{a\,m\,x}{c\,n}$$

$$c : e :: x : \frac{e\,x}{c} = \text{F L} \qquad \therefore \frac{e\,x}{c} = \frac{b}{2} + \frac{m\,h}{n} - \frac{a\,m\,x}{c\,n} \qquad \therefore x = \frac{c\,(n\,b + 2\,m\,h)}{2\,(e\,n + a\,m)};$$

and hence the exact distance of the side stake K from the centre F becomes known.

$$s : r :: y : \frac{r\,y}{s} = \text{M N}. \qquad \text{B I} : \text{I D} = \text{D N} : \text{N M} = m : n; \qquad \therefore n : m :: \frac{r\,y}{s} : \frac{m\,r\,y}{n\,s} = \text{D N}.$$

$$\text{F D} + \text{D N} = \text{F N}. \qquad \text{F D} = \tfrac{1}{2}b + \frac{m\,h}{n}; \qquad \therefore \text{F N} = \frac{b}{2} + \frac{m\,h}{n} + \frac{m\,r\,y}{n\,s}; \text{ but,}$$

$$s : t :: y : \frac{t\,y}{s} = \text{F N}; \qquad \therefore \frac{t\,y}{s} = \frac{b}{2} + \frac{m\,h}{n} + \frac{m\,r\,y}{n\,s} \qquad y = \frac{s\,(n\,b + 2\,m\,h)}{2\,(n\,t - m\,r)};$$

and hence the exact distance of the side stake M is readily determined.

Example.—Given the breadth of the roadway A B = 28 ft.; the height of the centre stake C F = h = 24 ft.; the ratio of the slopes A H, B M, or B I : I D = 3 : 2. In a surface distance F Y = 60 ft. = s. A rise F Q = 7 ft. = r, is found by the level and target-staff; in the surface distance, F Z = 50 ft. = c, a fall R Z = 4 ft. = a is found. Required the points K and M where the surface of the ground intersects the slopes that form the road. The solution of this problem and of this first

example are given at full length, in order that the ground-work of the practical rule, to be given presently, may be well understood.

$$\text{F M} : \text{F N} : \text{M N} = s : \sqrt{s^2 - r^2} : r,$$

$$\text{F K} : \text{F L} : \text{L K} = c : \sqrt{c^2 - a^2} : a$$

$$60^2 = 3600$$
$$7^2 = \quad 49$$

$$t = \sqrt{s^2 - r^2} = \sqrt{3551} = 59{\cdot}59$$

$$50^2 = 2500$$
$$4^2 = \quad 16$$

$$e = \sqrt{c^2 - a^2} = \sqrt{2484} = 49{\cdot}84$$

$$x = \frac{50\,(2 \times 28 + 2 \times 3 \times 24)}{2\,(49{\cdot}84 \times 2 + 4 \times 3)} = \frac{10000}{223{\cdot}36} = 44{\cdot}8 \text{ ft.} = \text{the distance from F to K.}$$

$$y = \frac{60\,(2 \times 28 + 2 \times 3 \times 24)}{2\,(59{\cdot}59 \times 2 - 7 \times 3)} = \frac{12000}{196{\cdot}36} = 61{\cdot}11,$$

the distance from F to M. Although this calculation is simple and extremely accurate, yet the generality of practical men require rules that can be applied without entering into the reasoning of the matter in every particular case and example. To suit this class of practitioners we will lay down one or two other methods of finding the values of x and y.

In Fig. 2666, by the use of the level and target-staff, as described in Fig. 2665, let the rise from the centre stake F, in the direction F Y, be determined; which represent by the ratio $t : 1$ That is, F W : W Y : t : 1.

2666.

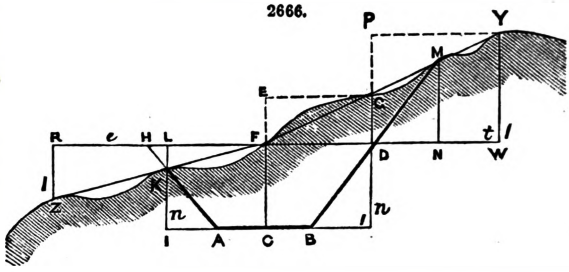

In the same manner, by placing the target-staff at Z, in the neighbourhood of K, find the fall from the centre stake F, so that F, K, Z, may be in the same straight line, or nearly so; in general terms this ratio may be represented by e to 1, that is, F R : R Z :: e : 1.

Before going on the ground to set out side stakes, the lines of the figure H A B D are known; the horizontal half-breadths F D, F H, are found from the height F C, and the breadth of the roadway A B being given. When the positions of H and D are known, it is not difficult to select some points, Z and Y, near them to ascertain the slope of the ground. In finding the half-breadths F D and F H, the ratio of B I to I D is also given; this ratio may be represented by $1 : n$, that is,

$$\text{B I} : \text{I D} = 1 : n; \qquad \text{D N} : \text{N M} = 1 : n; \qquad \text{H L} : \text{L K} = 1 : n.$$

Put v = H L, then $1 : n :: v : nv$ = L K.

Put H F = d = F D, the half horizontal breadth, through the centre stake F.

$$e : 1 :: d - v : \frac{d - v}{e} = \text{K L}; \qquad \therefore\ nv = \frac{d - v}{e} \text{ and } v = \frac{d}{ne + 1}$$

Again, put D N = z, then

$$1 : n :: z : nz = \text{M N};$$

$$\text{and } t : 1 :: d + z : \frac{d + z}{t} = \text{M N}.$$

$$\therefore\ nz = \frac{d + z}{t}, \text{ and } z = \frac{d}{nt - 1}.$$

From which the following simple practical rule may be deduced.

Rule.—When the ground rises from the centre, increase the horizontal half-breadth, divided by the half-breadth by the product (less one) of the numbers that express the ratio of the rise and the ratio of the slope, and the horizontal distance of the side stake is determined. When the ground falls from the centre, decrease the horizontal half-breadth, by the half-breadth divided by the product (plus one) of the numbers that express the ratio of the rise and the ratio of the slope; and the horizontal distance of the other side stake is found.

Example.—Given the breadth of a railway A B = 30 ft.; the height C F = 26 ft.; the side slopes 1 : 2 (B I : I D :: 1 : 2); the rise of the surface from F to Y = 1 in 20 (F W : W Y :: 20 : 1). The fall from F to D = 1 in 36; required the horizontal distances F N and F L, where the surface of the ground intersects the side slopes of the railroad.

H F = $\frac{30}{2} + \frac{1}{2}26 = 28$ = F D, half the horizontal breadth meeting the side slopes on a level line through F. The horizontal distance F W may be measured in lengths E G, P Y, when the surface is irregular.

$$2 \times 20 - 1 = 39, \text{ and } \tfrac{25}{39} = {\cdot}72 \qquad \therefore\ \text{F N} = 28{\cdot}72 \text{ feet.}$$
$$2 \times 36 + 1 = 73, \text{ and } \tfrac{28}{73} = {\cdot}38, \qquad \therefore\ 28 - {\cdot}38 = 27{\cdot}62 = \text{F L.}$$

This calculation is so plain and simple, that the positions of the side stakes are found in a few seconds. It should be noticed that in the ratios of the slopes, and inclination of the ground, unity is taken for the base of the side slopes, but for the perpendicular of the rise or fall of the ground.

Side Depths and Side Stakes.—In an embankment, Fig. 2667, given the breadth of the roadway A B = 32 ft.; the height C F = 18 ft.; the side slopes as 1 to $\frac{3}{2}$ (B I : I D :: 1 : $\frac{3}{2}$); the fall of the surface from F to M = 1 in $26\frac{1}{2}$ (F N : N M :: $26\frac{1}{2}$: 1); the rise of the surface from F to K to be the same as the fall, which is very often the case. Require the horizontal distances F N and F L, where the surface of the ground will meet the rise and slopes of the road.

$$D F = \frac{32}{2} + \frac{3}{2} \times 18 = 43 = F H.$$

$26\frac{1}{2} \times \frac{3}{2} = 17\frac{3}{4}$
take 1
$16\frac{3}{4}$

$$\frac{43}{16\frac{3}{4}} = \frac{129}{50} = 2{\cdot}58, \qquad 43 \textit{ plus } 2{\cdot}58 = 45{\cdot}58 = F N.$$

$$\frac{43}{18\frac{2}{3}} = \frac{129}{56} = 2{\cdot}3, \text{ and } 43 \textit{ minus } 2{\cdot}3 = 40{\cdot}7 = F \text{ ⌐}.$$

With embankments the rise answers to the fall in cuttings, by inverting Fig. 2663 it becomes Fig. 2664; hence the rule given for cuttings is easily made to answer for embankments.

2667.

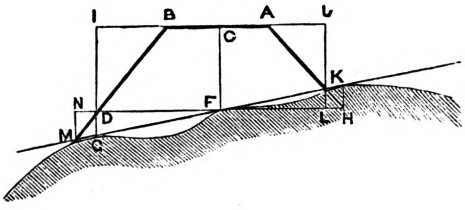

2668.

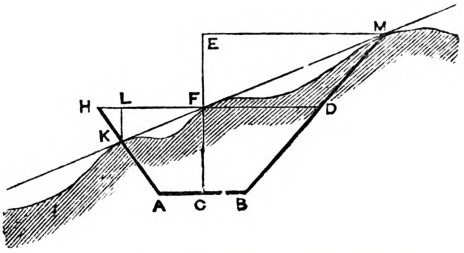

In a cutting, Fig. 2668, given the breadth of the roadway A B = 28 ft.; the height C F = 20 ft.; the ratio of the side slopes 1 : $\frac{1}{2}$; the inclination of the surface of the ground at the cross-section, taken by a theodolite = 14°, that is, the angle M F D = H F K = 14°. Required the horizontal distance E M and F L, where the surface of the ground meets the side slopes.

$$90° - 14° = 76°.$$

The natural tangent of 76° = 4·010781, hence the rise and fall of the slope of the surface of the ground at the cross-section may be taken as 4·01 to 1,

$$H F = \frac{28}{2} + \frac{2}{1} 20 = 54 = F D.$$

$4{\cdot}01 \times \frac{1}{2}$ = 2·005
Subtract .. 1·000
1·005

$\frac{54}{1{\cdot}005}$ = 53·73
Add .. 54·00 half-breadth.
E M = 107·73 ft.

Again, $4{\cdot}01 \times \frac{1}{2}$ = 2·005
Add .. 1·000
3·005

54·00 half-breadth
$\frac{54}{3{\cdot}005}$ = 17·97 take
F L = 36·03 ft.

In an embankment, Fig. 2669, given the breadth of the roadway A B = 30 ft.; the height C F = 12 ft.; the ratio of the side slopes 1 : $\frac{3}{4}$; the elevation or inclination of the surface of the ground in the direction of the cross-section = 3°, that is, angle K F H = D F M = 3°. Required the horizontal distances E M, F L, where the surface of the ground meets the side slopes. 90° − 3° = 87°; tan. 87° = 19·081137. Hence the rise and fall of the surface from the centre stake F may be represented by the ratio 19·08 to 1.

2669.

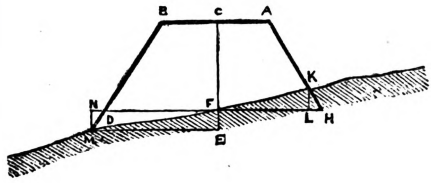

$$H F = \frac{30}{2} + \frac{4}{3} \times 12 = 31 = F D.$$

$19{\cdot}08 \times \frac{3}{4}$ = 14·31
Subtract .. 1·00
13·31

$\frac{31}{13{\cdot}31}$ = 2·33
31·00 = F D
33·33 = E M.

Again, $19{\cdot}08 \times \frac{3}{4}$ = 14·31
Add .. 1·00
15·31

$\frac{31}{15{\cdot}31}$ = 2·03
31·00 = F H
Difference 28·97 = F L.

The simplicity of this plan of putting down side stakes is apparent, and the formula from which it is deduced is easily remembered.

$$HL = \frac{d}{ne+1};\ d = FH. \qquad DN = \frac{d}{nt-1};\ d = FD.$$

It should be remembered that in the ratio 1 to n, 1 represents the base, and n the perpendicular of the side slopes. In the ratio t to 1, t represents the base, and 1 the perpendicular rise in the case of a cutting, and *vice versâ* in the case of an embankment, see Figs. 2667, 2668. The ratio e to 1, e represents the base and 1 the perpendicular.

To set out the widths when the surface of the ground is laterally sloping, and when the cross-section consists partly of cutting and partly embanking. Let K, A, Q M B, Fig. 2670, be the cross-section of a railroad, consisting partly of a cutting Q M B, and partly of an embankment A Q K. Let $l = AB = DH$, the bottom width, F the centre stamp, $FC = h$ the depth of the cutting, K M the sloping surface of the ground. First, suppose the embankment A K Q to occupy less than half the bottom width, as from A to Q, Fig. 2670. And further, suppose the ratio of the slope of the earth on both sides of the centre stake F to be represented by the same ratio t to 1; that is, $FN : NM :: t : 1$, or $FL : LK :: t : 1$. Yet the reasoning upon which the practical rule is founded will apply to two different slopes of ground, from the centre stake F, as in the former case. When the slope of the ground is known, or the ratio $t : 1$ is determined, then the point Q where the slope meets the base is readily found; for $1 : t :: FC : CQ$. Or, $QC = ht$. That is, if the height h multiplied by t be less than AC, half the breadth of the roadway, the work will be at the cross-section part cutting and part embanking

2670.

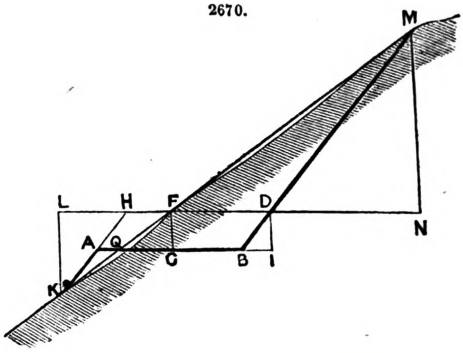

Let the side slopes be represented by the ratio $1 : n$, that is,

$$BI : ID = DN : NM = HL : LK = 1 : n. \qquad \text{Put } DN = x, \text{ and } HL = y.$$

The horizontal half-breadth F D, through F, to meet the slope of the cutting, is found as in the former investigation, where the slope of the ground does not meet the roadway at either side of F.

$$FD = \frac{b}{2} + \frac{1}{n} \times h, \text{ which put} = d.$$

The horizontal half-breadth F H, through F, to meet the slope of the embankment K H, is easily found when F D is known, for

$$HD = AB = b, \text{ and } HF = HD - FD = b - \left(\frac{b}{2} + \frac{h}{n}\right) = \frac{b}{2} - \frac{h}{n},$$

which put $= \delta = HF$.

$$1 : n :: x : nx = NM.$$

$$\text{Also,} \quad t : 1 :: d + x : \frac{d+x}{t} = NM; \qquad \therefore\ nx = \frac{d+x}{t}, \quad \text{or } x = \frac{d}{nt-1}.$$

This result is exactly the same as that given before, for the increase of horizontal breadth in the case of a rise in cutting, or a fall in embanking.

$$1 : n :: y : ny = KL.$$

$$\text{Again,} \quad t : 1 :: \delta + y : \frac{\delta + y}{t} = KL; \qquad \therefore\ ny = \frac{\delta + y}{t}, \quad \text{or } y = \frac{\delta}{nt-1},$$

which is a similar expression to that given for x; the only difference is that $\delta = HF$ is put in the place of $d = FD$.

Example.—Let $AB = b = 28$ ft.; $FC = h = 4$ ft.; the side slopes 1 : 2 (BI : ID :: 1 : 2); the cross-slope of the ground 13 to 1 (FN : NM :: 13 : 1). Required the horizontal distances F N and F L where the slopes meet the surface.

$$FD = \frac{28}{2} + \tfrac{1}{2} \text{ of } 4 = 16 = d. \qquad FH = 28 - 16 = 12 = \delta.$$

$$\text{Since} \quad n = 2, \text{ and } t = 13, \qquad \therefore\ \frac{16}{2 \times 13 - 1} = \cdot 64, \quad \text{and } \frac{12}{2 \times 13 - 1} = \cdot 48.$$

$$\therefore\ 16 \cdot 64 = FN \qquad 12 \cdot 48 = FL.$$

Example.—In Fig. 2671, the embankment M B Q occupies more than half the bottom width, as from B to Q. Let $AC = CB = 14$ ft.; $FC = 4$ ft.

$$FL : LK :: 13 : 1, \qquad HL : LK :: 1 : 2;$$

as in the last example, required the horizontal distances from F to L and from F to N.

$$FD = \frac{28}{2} + \tfrac{1}{2} \times 4 = 16 = d, \qquad FH = 28 - 16 = 12 = \delta.$$

Since $n = 2$, and $t = 13$, $\therefore \frac{16}{2 \times 13 - 1} = \cdot 64$, and $\frac{12}{2 \times 13 - 1} = \cdot 48$;

Hence F N = 16·64, and F L = 12·48 ft.

2671

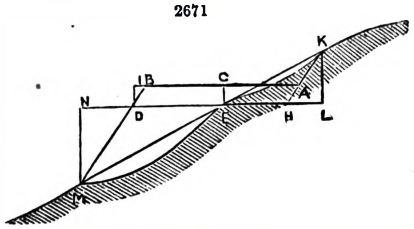

2672.

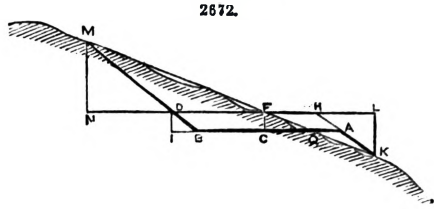

Example.—In Fig. 2672 the embankment A Q K occupies less than half the bottom width from Q to A. Let A C = C B = 14 ft.; F C = 4 ft.;

F L : L K :: 13 : 1; B I : I D :: 1 : 2.

Required the horizontal distances from F to L, and from F to N.

$$F D = \frac{28}{2} + \tfrac{1}{2} \times 4 = 16 = d; \qquad F H = 28 - 16 = 12 = \delta.$$

$$\therefore \frac{16}{2 \times 13 - 1} = \cdot 64, \quad \text{and} \quad \frac{12}{2 \times 13 - 1} = \cdot 48, \qquad F N = 16 \cdot 64, \quad \text{and } F L = 12 \cdot 48 \text{ ft.}$$

2673.

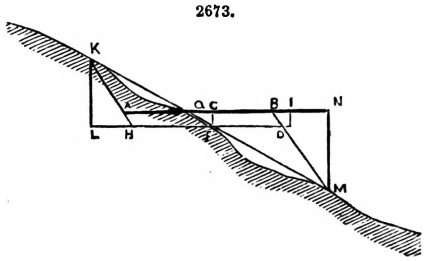

Example.—In Fig. 2673 the embankment Q B M occupies more than half the bottom width, from Q to B. Let A C = C B = 14 ft.; F C = 4 ft.

F L : L K :: 13 : 1; H L : L K :: 1 : 2.

Required the horizontal distances from F to L and from F to N.

$$F D = \frac{28}{2} + \tfrac{1}{2} \times 4 = 16 = d. \qquad F H = 28 - 16 = 12 = \delta.$$

$$\left.\begin{aligned} D N = x &= \frac{d}{n t - 1} = \cdot 64 \\ H L = y &= \frac{\delta}{n t - 1} = \cdot 48 \end{aligned}\right\} \text{ as in the foregoing examples.}$$

$$F N = 16 \cdot 64, \qquad \text{and } F L = 12 \cdot 48 \text{ ft.}$$

By comparing the Figs. 2670 to 2673, and observing how the formulas

$$x = \frac{d}{n t - 1} = D N, \qquad \text{and } y = \frac{\delta}{n t - 1} = H L,$$

may be applied in every possible case, the setting out of side stakes, when part of the cross-section is a cutting and part an embankment, becomes easy

Works relating to this subject:—Macneill, 'Tables for the Calculation of Earthwork,' 8vo, 1846. F. Bashforth, 'General Table for the Calculation of Earthworks,' 8vo, 1855. D. Cuningham, 'Tables for the Calculation of Earthwork,' royal 8vo, 1867. Greenbank and Pigot, 'Metrical Earthwork Tables,' square 16mo, 1867. J. C. Trantwine, 'On Excavations and Embankments,' 8vo, 1868. G. P. Bidder, 'Earthwork Tables,' 18mo.

EMBOSSING. Fr., *Art de travailler en bosse;* Ger., *Bossiren;* Ital., *Imbozzare;* Span., *Realce.* [See Arming Press.]

EMBROIDERING MACHINE. Fr., *Machine à broder;* Ger., *Stickmaschine;* Ital., *Macchina da ricamare;* Span., *Máquina para bordar.* [See Sewing Machines.]

EMERY. Fr., *Émeri;* Ger., *Schmirgel;* Ital., *Smeriglio;* Span., *Esmeril.* [See Polishing and Grinding.]

ENGINE TURNING. Fr., *Travail au tour;* Ger., *Drechseln;* Ital., *Torno ad ornati geometrici;* Span., *Guillochis.* [See Lathes.]

ENGINES, VARIETIES OF. Fr., *Machines;* Ger., *Maschinen;* Ital., *Varieta di macchine;* Span., *Clases de máquinas.*

We have before stated that kindred articles, and those not complete in themselves, may be traced and combined by observing the references appended to such articles; thus, all that appertains to Steam and the Steam-Engine will be found under the articles headed Boilers, Details of Engines, Gearing, Indicators, Link-Motion, Locomotives, Marine Engines, Parallel Motions, Pumps and Pumping-Engines, Slide-Valves, Stationary Engines; and in the present article under the appellation, Engines, Varieties of. Steam-engines treated of in this place have peculiar mechanical combinations and arrangements, or they are employed to effect particular objects which require special notice.

The Corliss engine, in all except the cylinder with its valves and valve-gear, is substantially the same as any ordinary steam-engine; but it embodies in the arrangement of the cylinder and valve-gear several principles that had previously been used separately.

First, independent ports are used for admitting and for exhausting the steam at each end of the cylinder, with four separate slide-valves worked from a single eccentric.

Second, the steam is cut off from the cylinder by the main steam-valves, without the employment of any supplementary valves for the purpose.

Third, the steam-valves are opened against the resistance of springs, and a liberating gear is employed by which the valves are disconnected and left free to be closed by the springs.

Fourth, after the valves are closed, the springs are brought to rest without shock by the application of the contrivance known as the *dash-pot*, invented by F. E. Sickles. This consists of a small cylinder with closed bottom, in which a piston is fitted to work easily; and by a suitable arrangement of openings the air is admitted freely to the cylinder while the piston is moving, except when it approaches the bottom, at which time a certain amount of air is imprisoned, forming a cushion to prevent any shock when the piston actually reaches the bottom.

Fifth, the speed of the engine is regulated by the governor acting on the steam-valves to cut off the steam earlier, instead of acting on a throttle-valve to reduce the pressure of the steam.

It is the embodiment of these several principles, and the arrangement and construction of the details in the mechanism employed, rather than the application of any new or untried principle which constitute the special features of the Corliss valve-gear.

Cylinders with four separate passages and independent steam and exhaust slide-valves were used by Seaward previously, the valves employed being flat slides, but not worked in connection with any liberating gear; and a number of marine engines were made on this plan. In the earlier Corliss engines, Seaward's cylinders and slides were used; but the valve now employed is a cylindrical slide working in the arc of a circle on its seat, and receiving a rocking motion from a central valve-spindle. Although separate valves and passages were employed previously for steam and for exhaust at each end of the cylinder, the motion imparted to the steam-valves was invariable, and any expansion of the steam was effected by the lap of the valve. The speed of the engine also had to be controlled by throttling or shutting off the steam with a supplementary valve; and in this respect the first step in advance is made in the Corliss gear by the addition of the principle of liberating the steam-valve. With the employment of liberating gear it became necessary that an independent force should be available for closing the valves when they were detached, and for this purpose weights were first used; but springs have since been substituted for the weights, because they are quicker in action, effecting a sharper cut-off, and are better adapted for quick working. Liberating gear for the steam-valves was indeed used by Watt, so that the principle may be considered almost as old as the steam-engine itself; but in Watt's time it was more frequently for opening than for closing the valves that the weights used in that method of working were employed, and as might be expected the mechanism was not very perfect in its details. At that time the drop or poppet valve was used for the purpose.

To F. E. Sickles, of New York, is due the credit of perfecting the liberating gear as applied to the poppet or the double-beat valves, in the cut-off gear which bears his name. In this valve-gear, which was introduced in 1841 in America, the *dash-pot* is applied direct to the valve itself, to arrest the progress of the valve and prevent it from striking on its seat. It should be observed that there is an essential and important difference between the use of drop-valves and slide-valves, in connection with liberating valve-gear; for in the one case the dash-pot is applied to arrest the valve itself and prevent it from striking on its seat, but in the other it is only required to prevent the concussion of the weight or spring that is used to close the valve. If the drop-valve, in order to prevent concussion, is made to fall slowly just as it approaches its seat, it is evident that there must be a certain amount of wire-drawing of the steam; whereas with the slide-valve the motion of the spring or weight which closes it is not arrested by the dash-pot till after the valve is closed and the steam completely cut off; hence while the cut-off with the slide-valve must be perfect, with the drop-valve it must at best be to a certain extent imperfect.

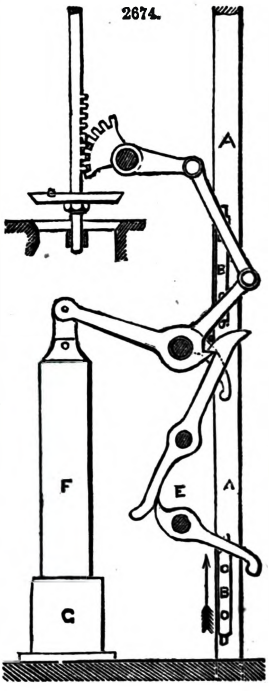

Regulating the speed of steam-engines by connecting the governor to vary the degree of expansion, instead of throttling the steam, was advocated, if not practised, by Watt, and many different arrangements have been invented and applied for effecting this object. In the Corliss expansion gear the governor is connected to the clips used to liberate the steam-valves, and according as the pressure of steam in the boiler or the load on the engine varies, the supply of steam to the cylinder is cut off at an earlier or later period of each stroke; so that the speed of the engine is kept uniform, without the addition of any throttle-valve in the steam-pipe. While the steam-valves are thus controlled by the governor, and caused to close at an earlier or later period of the stroke to suit the varying conditions of the steam-pressure or load on the engine, the exhaust-valves have an invariable motion, and are opened and closed at the same point of the stroke, whatever may be the degree of expansion.

The disconnecting valve-gear for working the steam-valves, as originally introduced by Watt and applied for the purpose of opening or closing poppet-valves, is shown in Fig. 2674. It was usual in this gear to communicate motion to the valves by a rod A called a plug-tree, attached to some moving part of the engine, generally to the beam; on this rod were fitted tappets B B, to open or close the valves when moving in one direction, and when moving in the opposite direction to trip or liberate the catches and allow the weights to act for either closing or opening the valves as might be arranged.

The drawing shows the plug-tree A with its tappets B B, the valve C, the catch D, and the curved lever E for tripping the catch, the weight F for closing the valve, and the dash-pot G for bringing the weight gradually to rest when dropped. All the details are rude and clumsy, but it can be seen that there is in this arrangement the germ, so to speak, of the Corliss expansion gear.

In Fig. 2675 is shown the arrangement of gear employed in the earlier Corliss engines in America for actuating the steam-valves; and the contrivance used for tripping or liberating the catch, in connection with a governor, to produce the sudden closing of the valves. In this arrangement a weight H was used, attached to a lever on the valve-spindle I, to supply the external force for closing the valve when the catch K was liberated, the weight falling in a dash-pot similar to that in Watt's gear. This plan was improved several years ago by Corliss, who then introduced an arrangement in which the catches push the valves open instead of pulling them, and the valves are closed by long blade-springs fitted to vibrating levers. The tripping of the catch is effected by curving up the back end at K, and this end when moving forwards comes into contact with a plate L, which is acted on by a rod M connected with the governor; the rod M carries an incline, which raises or lowers the plate L according to the changes in position of the governor balls, so that when the plate is lowered by the governor balls flying out in consequence of excess of speed, the catch K is tripped sooner, and reduces the supply of steam to the engine by cutting off the steam earlier. A few engines fitted with this arrangement of gear were made in this country some years ago, but the plan appears to have since fallen into disuse.

2675.

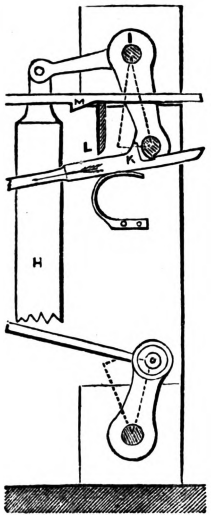

2676.

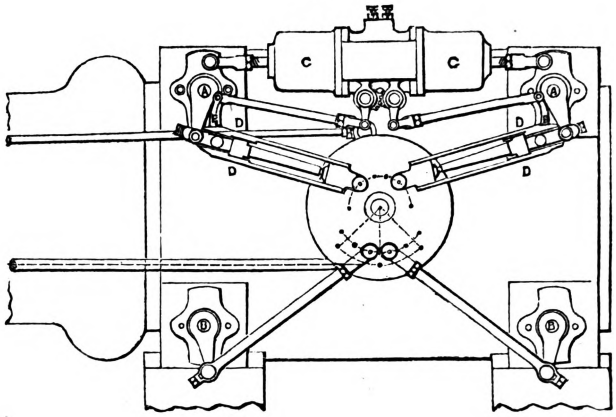

The present improved construction of the Corliss engine is shown in Fig. 2676, which is a side elevation of the cylinder and valve-gear of a small horizontal engine made by Hick Hargreaves and Co., of Bolton, for the Royal Arsenal at Woolwich, from designs by William Inglis. This engine, which has 12-in. cylinder and 2-ft. stroke, works at 100 revolutions per minute. The cylinder is shown in transverse section in Fig. 2677, and in longitudinal section in Fig. 2678. The

2677.

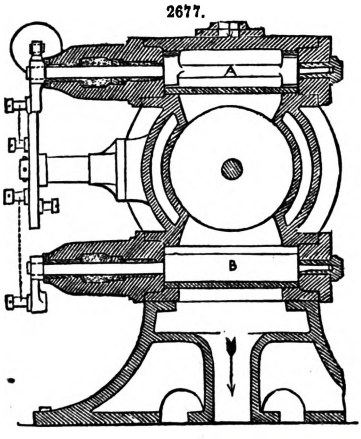

2678.

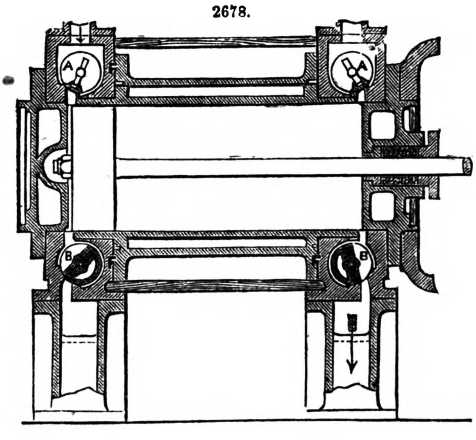

steam-valves A A are placed on the top of the cylinder, and the exhaust-valves B B at the bottom, separate pipes leading from them at each end of the cylinder. The steam-valves are closed by a spring dash-pot C C, which pulls upon each valve-rod as it is drawn out; and the liberating gear

consists of a pair of side spring-clips D D, which are released by the rocking of a double toe-lever E E, and then allow the steam-valve to be closed by the action of the spring the spring-clips and toe-lever, and the valve-gear generally, are similar to those afterwards described in the Saltaire engines. The valves are cylindrical on the face, being similar in action to ordinary slide-valves, but working upon a cylindrical instead of a flat face; the valve face is a longitudinal segment of a cylinder, having recesses on its inner side, into which drop the projecting arms of the valve-spindle, so that the valve is moved by the partial rotation of the spindle in opposite directions alternately. The pressure of the steam on the valves tends to press them up to the face, only when the ports are closed; so that when the ports are opened, the valves move with practically no friction from the steam-pressure, and thus the pull required to close the steam-valves is small, and is practically independent of the pressure of the steam.

The cylinder is steam-jacketed both on the body and on the ends; and an improvement in the construction of these cylinders has recently been introduced by the writer, considerable trouble having been experienced in getting the jacketed cylinders sufficiently hard when cast in one piece, on account of the risk from cracking if cast with hard metal, and also in consequence of the annealing process that takes place during the cooling of the castings. The improvement consists in making the cylinder and valve-chest in four distinct pieces, with flanged face-joints F F to connect all together, as shown in Fig. 2678. The cylinder and the steam-jacket are two concentric castings, fitting one inside the other, with a flange F F upon the jacket only; and a separate casting at each end forms the valve-chests above and below the cylinder, with a ring connecting the two valve-chests; the end of the cylinder is fitted into this ring, and the cylinder cover is fixed upon it, all the fitting surfaces being turned and bored. The separate castings are thus rendered quite simple, and can be made of any degree of hardness without risk; while the flanged face-joints provide security against leakage, much better than if the inner cylinder were simply let in, with slip joints parallel to its bore. A saving of time in making can also be effected, as the work on the separate pieces can be proceeded with in several machines at the same time.

Figs. 2679, 2680, show a front and side elevation of one of the new cylinders with the improved Corliss expansion gear that have recently been erected at Saltaire by Hick Hargreaves and Co.,

2679

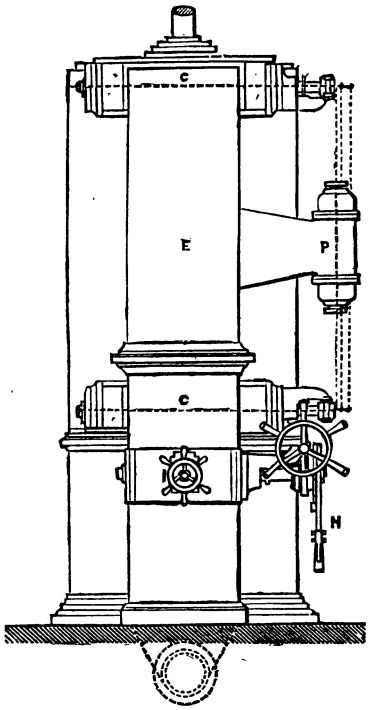

2680

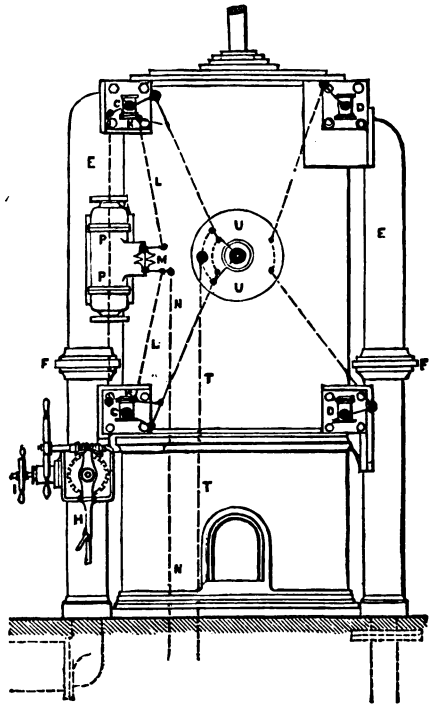

from designs by Wm. Inglis. The engines are beam-engines coupled together, with 50-in. cylinders and 7-ft. stroke, working at thirty revolutions per minute. There are two pairs of engines to be replaced, four cylinders in all, and the new cylinders have been put in place and now completed for one pair, and are the same size; the previous cylinders had double-beat valves actuated by a cam-motion. Figs. 2681 to 2683 are vertical and horizontal sections of one of the cylinders, showing the valves. The cylinders and cylinder covers are steam-jacketed; and the valve-chambers are cast with the cylinders. The steam-valves C C are in front and the exhaust-valves D D at the back of the cylinder, and the valve-gear is placed on the sides of the cylinders between each pair of engines. The steam and exhaust passages E E are cast separate from the cylinder, and provided with expansion joints F F, shown in section in Fig. 2681. The valves are cylindrical on the face, similar in construction to those of the Woolwich engine previously described. All the four valves are opened by the eccentric rod T, Fig 2680, acting on an oscillating disc U, to which the

four valves are connected by rods; the exhaust-valves D D are also closed by the same means, but the steam-valves C C are released, and are closed by an air-spring P. The stop-valve G in the steam passage is similar in make to the steam-valves, and is opened by a worm and worm-wheel to regulate the supply of steam; but it can be closed suddenly on any emergency by means of the

2681.

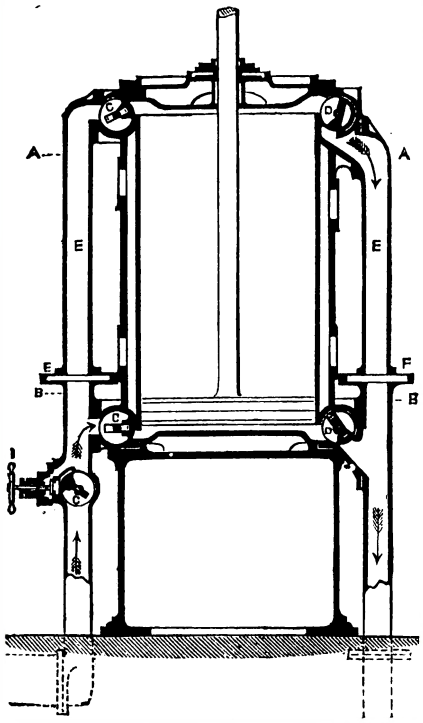

2682.

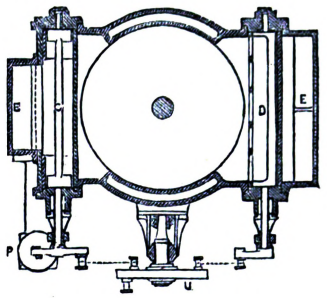

2683.

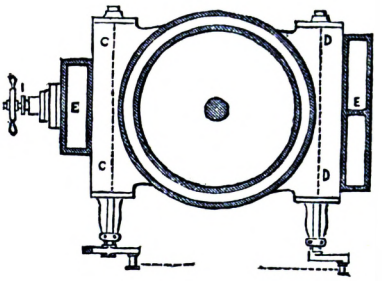

lever-handle H, which is keyed upon the valve-spindle, and is connected to the worm-wheel by a detent that can be instantly disengaged, the worm-wheel being loose upon the valve-spindle. A small auxiliary conical stop-valve I opened by a screw handle is employed for turning on the steam gradually at starting, to relieve the pressure on the main stop-valve G.

The construction of the liberating valve-rod introduced by Spencer and Inglis, for the disengaging gear to release the steam-valves, is shown in Figs. 2684 to 2686. The valve-rod is divided into two portions, one sliding steadily within the other at the cylindrical part A A; and the two are held together by the pair of spring-clips B B fixed on one portion, which rest on corresponding shoulders C C on the other portion of the valve-rod. The clips are released by the double toe-lever D, which rocks upon a transverse centre pin, and is shown in its two extreme positions in Figs. 2684, 2685; the outer end K of the arm of the toe-lever being held by the rod L, shown in the general drawing, Fig. 2680, the toe-lever D is made to rock in each stroke of the valve-rod, and the particular point of the stroke at which the toe-lever reaches its extreme position and disengages the spring-clips B B is determined by the position of the end K of the toe-lever arm, which is not stationary,

2684.

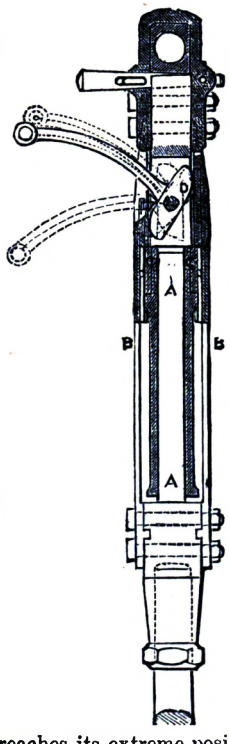

2685.

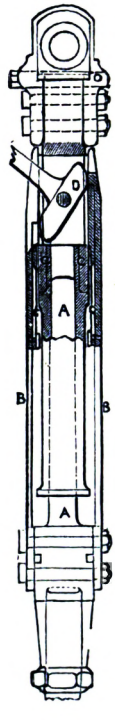

2686.

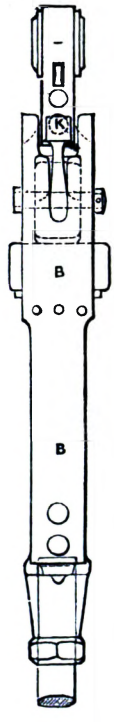

but is acted on direct by the governor through the rod L. By this means all changes in position of the governor balls produce corresponding changes at the same time in the position of the fulcrum upon which the toe-lever acts, causing the release of the spring-clips to be earlier or later in the stroke, according as the speed of the governor is greater or less than the correct rate, and thus regulating the engine by cutting off the steam earlier or later accordingly. The disengaging rods L L from the two steam-valves are coupled together by a pair of toothed segments M M, shown in Fig. 2680, and also in the enlarged drawing, Fig. 2687; and the rod N, Fig. 2680, connects these with the governor. The spring-clips B B fall upon leather faces O O, to prevent any blow in closing; and the engaging edges of the clips and the shoulders are hardened steel faces let in and readily renewable.

The air-spring dash-pot P for this gear, Fig. 2680, is shown enlarged in Fig. 2687, one half in section. It consists of two cylinders, one within the other; the large cylinder has a loose-fitting piston R R, and the small cylinder a trunk piston S S fitted with metallic packing; the under-side of this trunk piston is in connection with the condenser. The pressure of the atmosphere is therefore constantly pressing the small piston in, and this forms the spring for instantly closing the steam-valve when liberated from the clip-rod; the large piston R is coupled to the small one S, and acts as a dash-pot to prevent concussion in closing the steam-valve, as the air below th loose-fitting large piston R has to be driven out at the moment of closing the valve.

2687.

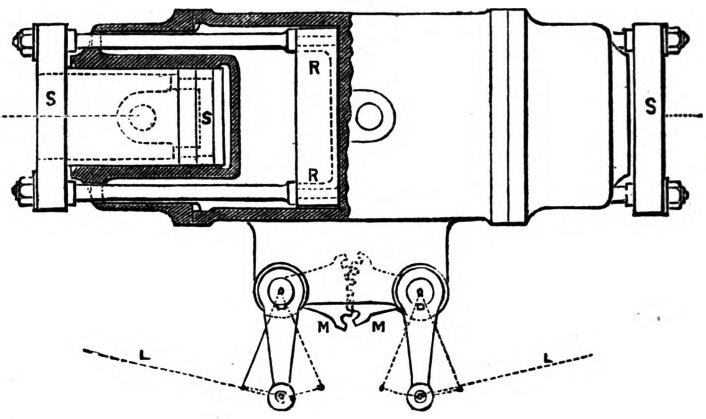

The Allen Engine and Governor.—C. Porter, in the Proceedings of I. M. E., justly observes that the principal objects to be aimed at in carrying out expansion in a steam-engine, so as to effect the greatest economy, may be stated to be;—that the full boiler-pressure should be carried into the cylinder at the commencement of the stroke, and maintained up to the point of cut-off;—that the cut-off should be sharp, without reduction of the steam-pressure by wire-drawing;—and that the exhaust should be invariable, allowing the steam-pressure to act to the end of the stroke with all degrees of expansion, and discharging the steam with the least loss from back pressure during the return stroke.

2688.

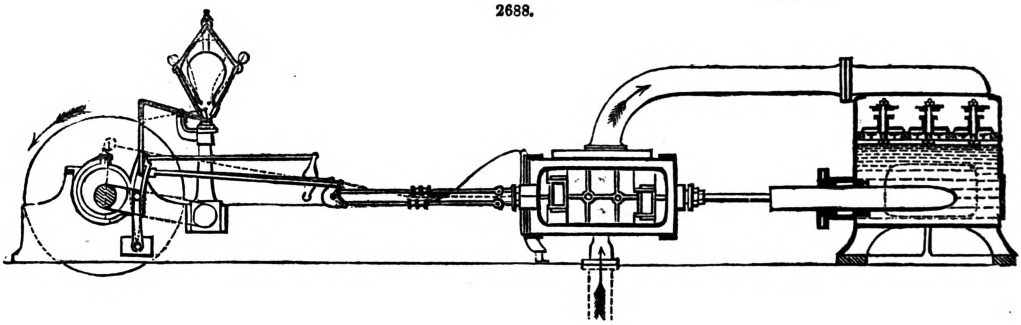

2689.

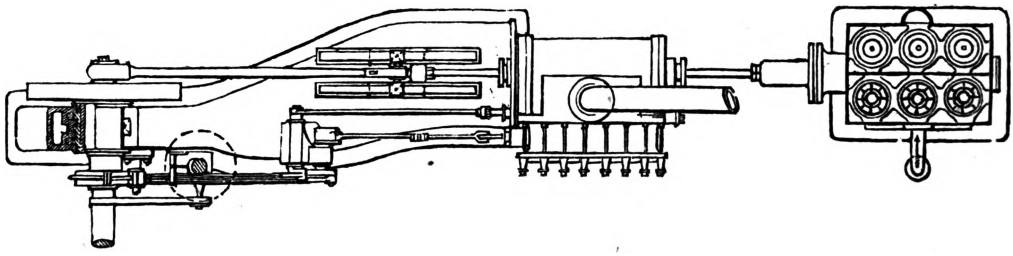

The attainment of these objects has generally been considered practicable only by means of some kind of liberating valve-gear, in which the valve is released from the gear when wide open, and is closed suddenly by a spring or by the action of gravity, so as to avoid the reduction of pressure by wire-drawing, which ordinarily takes place through the gradual closing of the steam-port by a slide-

valve worked with a continuous motion. Many ingenious constructions of liberating valve-gear have been invented for effecting this object; and amongst them the Corliss engine, just described, has been found to accomplish the desired end very successfully.

In the Allen engine, however, the preceding requirements are met by a direct continuous action of the slide-valves, which gives a sharp cut-off to the steam admitted at full boiler-pressure, and a high range of expansion, together with a very free exhaust. At the same time this arrangement obviates the objection attending the principle of a liberating valve-gear, namely, that the speed at which the engine can be worked is limited by the circumstance of the valve having to be disconnected from the driving gear and connected again at each stroke of the engine. The Allen engine admits of being worked at a very high speed, much higher than is usual in stationary engines; and it maintains complete steadiness of motion at this high speed, combined with a great uniformity in the driving power throughout each revolution, although the steam is admitted at an unusually high pressure at the commencement of the stroke.

The engine is represented in Figs. 2688, 2689, which show a side elevation and plan of an engine with cylinder of 12 in. diameter and 24 in. stroke. This engine was employed at the works of the Whitworth Company, at a constant speed of 200 revolutions a minute, or 800 ft. a minute speed of piston, driving a considerable portion of the machinery in the works; and a similar engine was worked at the Paris Exhibition, running at the same speed. The engine is horizontal, fixed upon a bed-plate, and working an air-pump direct from the piston-rod, which is prolonged through the outer end of the cylinder. The slide-valves are worked by a link-motion, which is controlled entirely by the governor, giving a variable degree of expansion according to the amount of work to be done by the engine; but the steam is always admitted to the cylinder at full boiler-pressure, without passing through a throttle-valve.

Valves and Valve-Motion.—The steam slide-valves are shown in the longitudinal and transverse sections of the cylinder, Figs. 2690, 2691. The steam-valves are independent of the exhaust-

2690.

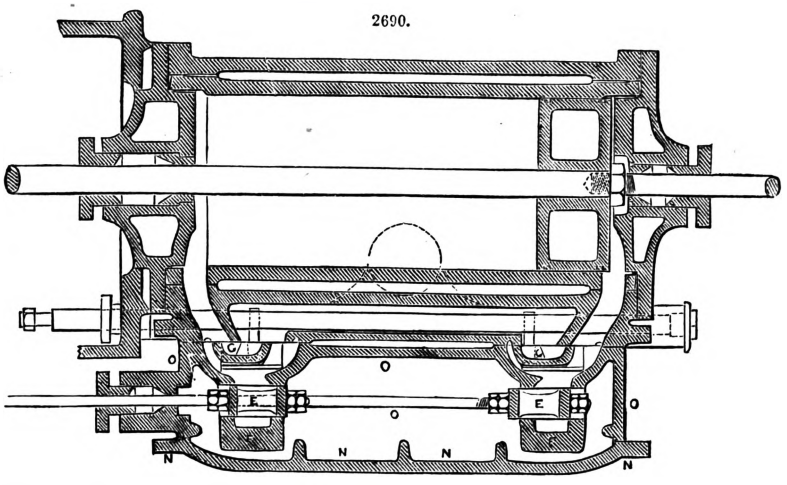

valves, and two separate valves are employed, one for each port. The two steam-valves E E are driven with separate motions, independent of each other, so as to effect a sharp cut-off at each end of the cylinder by the rapid motion of each valve at the point of closing the port; the motion of one valve being rapidly accelerated at the point of cut-off, at the same time that the other valve is greatly retarded. Each steam-valve consists merely of an open rectangular frame sliding between two parallel faces, which are fixed, so that the valve is in equilibrium and its motion is not affected by the pressure of the steam. The outer face F, against which the back of the valve slides, is a rigid plate bridging across the port and fixed down solid to the port face; and it is adjusted so as to allow the valve to slide freely, but with so good a fit as to be steam-tight. The travel of the valve in opening extends beyond the two faces, so as to admit the steam to the port at four places simultaneously, as shown in the separate diagrams, Figs. 2700, 2701, in which the length of the valve-rods and the distance between the valves are shortened for convenience in the diagram. In Fig. 2700 the steam is shut off from the nearer port; and in Fig. 2701 the farther steam-valve is shown at the point of opening the port, just previous to the commencement of the stroke, the crank being at that moment in the position shown by the dotted line.

2691.

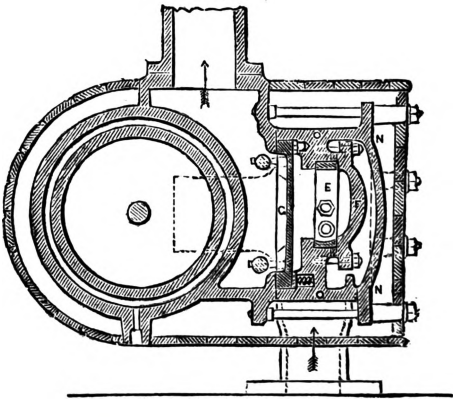

In order to maintain the proper working of these valves, the back plate F, Figs. 2690, 2691, is

made very rigid, so as to prevent any yielding under the pressure of the steam; and the entire plate with its side supports being surrounded by the steam is consequently exposed to the same expansion as the slide-valves In order to provide the means of adjustment in case of any wear, a packing strip is inserted on each side between the back plate and its side supports; so that by reducing the thickness of these packing strips the two faces can be readily let together at any time to fit the slide-valve. The wear is found however to be so exceedingly slight, on account of the absence of pressure on the rubbing surfaces, that there is no probability of any adjustment being required oftener than once a year.

2692.

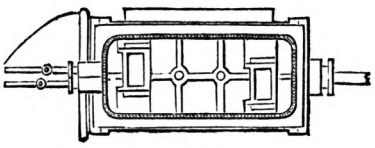

2693.

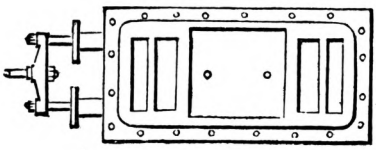

2694.

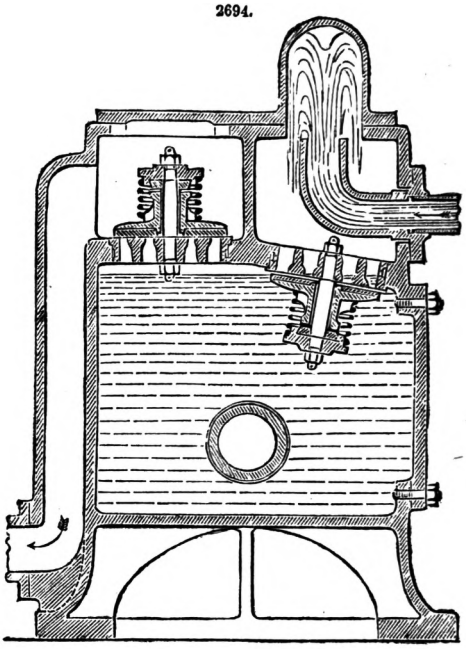

2695.

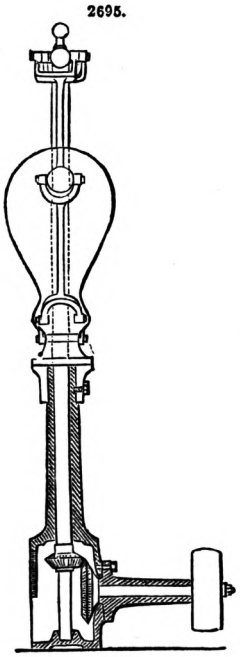

2696.

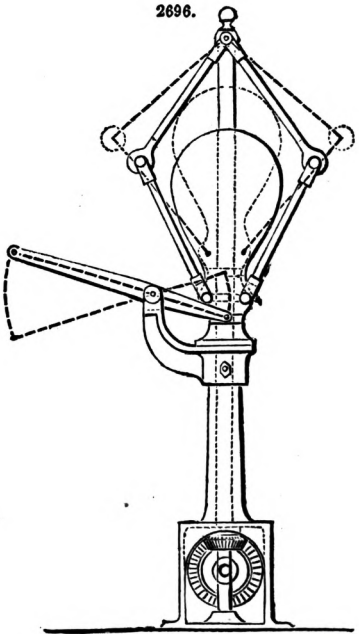

2697.

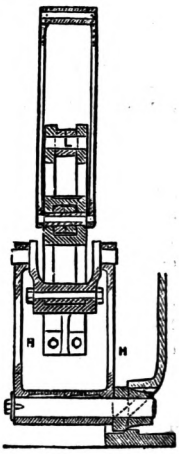

The exhaust-valves G G are also two separate valves, as shown in Figs. 2690, 2691, and in the diagram, Fig. 2702; but they move together and are driven by the same valve-rod. These slide-valves are of the ordinary form, and work in separate chambers, between the steam-valves and the cylinder; they travel beyond the port face, so as to open for the exhaust at the two edges simultaneously. As the steam-valves, however, open at four places simultaneously, the exhaust-valves

are made of nearly double the width, as shown in Figs. 2691 and 2693, in order to give a corresponding area of opening; and the extent of their motion is such as to give an area of opening for release of the steam more than double the largest area for admission. These valves work in equilibrium through most of their stroke.

2698.

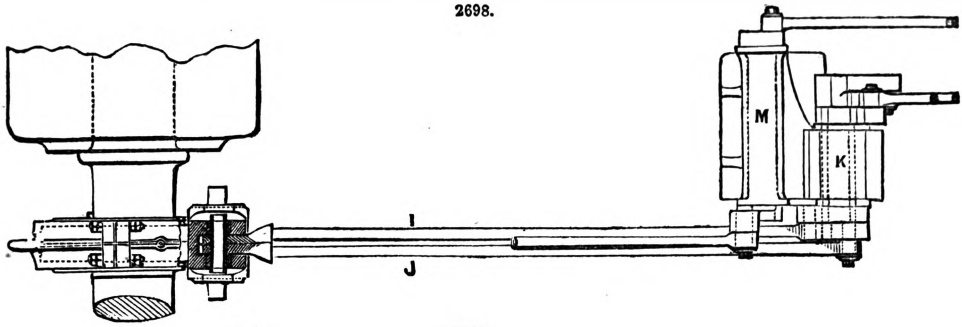

2699.

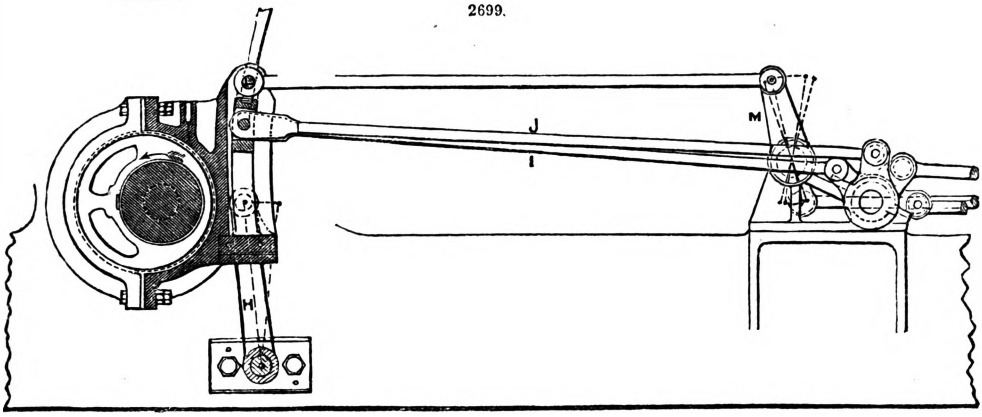

2700.

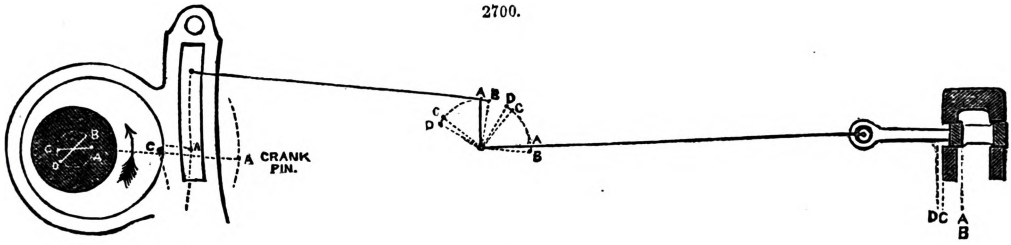

2701.

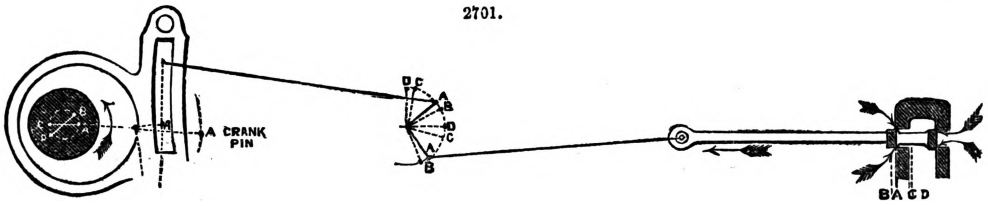

Although there are thus four separate valves for the steam and exhaust, the motion of all of them is obtained from a single eccentric, which is fixed on the crank-shaft in the same position as the crank, and without any lead, as shown in the diagram, Fig. 2703. The eccentric is shown in Figs. 2697 to 2699, and has a curved slot in one side of the strap, which acts as the expansion-link; and it is guided in its motion by being connected to the upper end of the vibrating lever H centred below. Two valve-rods, I and J, are connected to the same slide-block in the link, and attached at the other end to two separate bell-crank levers upon intermediate rocking shafts, as shown in the diagrams, Figs. 2700, 2701. One of these rocking shafts is made tubular, with the second running through it, as shown at K, in Figs. 2698, 2699, so that the two shafts work independently of each other. The second arms of the two bell-crank levers are connected respectively to the two steam-valves, Figs. 2700, 2701. The slide-block in the expansion-link is carried by two side links from the arm of the governor, as shown in Fig. 2688, so that its position is regulated entirely by the governor, the block being lowered so as to cut off the steam earlier whenever the governor balls begin to fly out in consequence of any increase of velocity.

The motion of the exhaust-valves is invariable, and they are connected direct to a point L, Figs. 2697 and 2699, beyond the outer end of the link-slot. A greater travel is thereby given to the exhaust-valves, as shown in Fig. 2702, than the greatest travel of the steam-valves; and this motion is continued the same during every change of expansion produced by shifting the slide-block from which the steam-valves are moved, so that the exhaust continues equally free with every degree of expansion. The point of connection to the link is so placed as to give the required lead to the exhaust-valves, and is arranged beforehand to suit the intended speed of piston. The exhaust-valves are driven through an intermediate rocking shaft M, Fig. 2699, for reversing the motion obtained from the eccentric; and a pair of valve-spindles are used, one at each edge of the two valves, as shown in Figs. 2691 and 2693, and working within the intermediate exhaust-port, Fig. 2690. The spindles are guided at each end, and each valve is connected to them by two studs fixed in the valve, which fit into slots in the spindles, working clear within the opening of the ports, Figs. 2690, 2691, and 2702. In the case of the steam-valves, as the two valves have independent motions, the spindle for driving the farther valve passes free through a short tube in the lower side of the nearer valve, Fig. 2691; the two spindles are made to clear each other by the valves being placed out of line with each other, as shown in the elevation of the steam-port faces, Fig. 2692; the spindles are kept central in each of the valves.

2702.

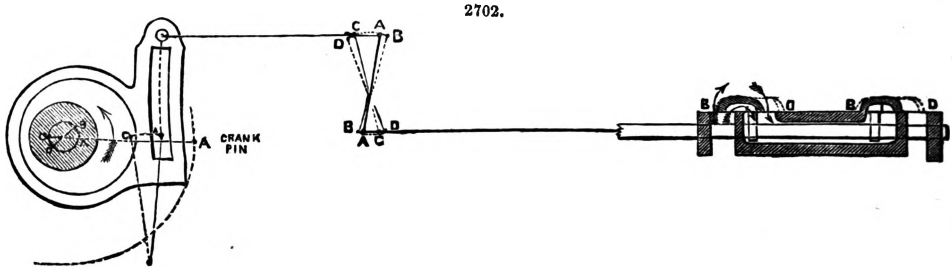

2703.

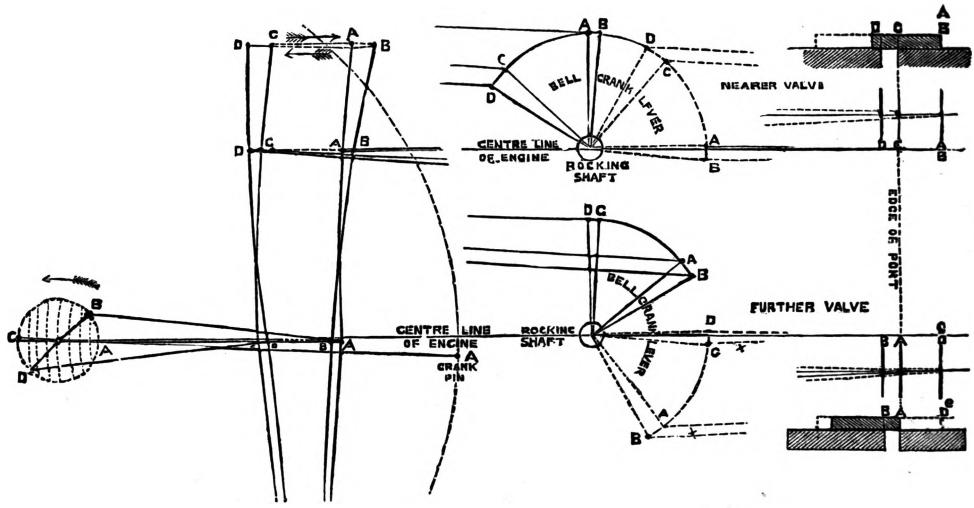

All the valves are readily accessible by simply removing the nuts of the steam-chest cover N, Figs. 2690, 2691, as the steam-chest is not cast solid upon the cylinder, but is a separate rectangular frame O O, fitted down with a scraped joint on both faces, and secured by the same through-bolts that fix the cover N. This construction has the important practical advantage that the steam-chest can be entirely removed, and all the port faces can be readily got at like plain outside surfaces.

In this valve-motion the proportion between the throw of the eccentric and the length of eccentric-rod, or the distance from the centre of the eccentric to the centre of the link, is made the same as the proportion between the main crank and the connecting-rod, which in this engine is 1 to 6, or the length of connecting-rod is three times the stroke. Consequently as the eccentric is set exactly to correspond in position with the crank, the angular vibration of the one compensates for that of the other, and an exactly correct valve-motion is obtained, giving the same results for each end of the cylinder. A considerable difference often exists in the indicator figures taken from the opposite ends of a cylinder, in consequence of the discrepancy between the motions of the connecting-rod and the eccentric-rod; and the difference in speed of piston during the first degree of rotation of the crank at the extreme opposite ends of the stroke amounts to 28 per cent. of the higher speed when the connecting-rod is six times the crank, 33 per cent. when five times, and 40 per cent. when four times the crank. In such cases, therefore, the point of cut-off is not the same in the two strokes

of the piston; but in the present engine the two strokes are identical throughout, in consequence of the eccentric and connecting rods having exactly parallel and simultaneous motions.

The connection of the expansion-link to the steam-valves by the intermediate bell-crank levers introduces in effect a toggle-joint movement, which has the important advantage of allowing the length of the valves to be reduced very considerably, because more than half of the lap or useless motion of the valves after having covered the ports is dispensed with by their motion being greatly retarded at that time; whilst the opening for steam admission is correspondingly increased by the motion of the valves being accelerated at the opposite extremity of their travel. This variation in the motion is shown by the diagram of the link-motion in Fig. 2703, and also in Figs. 2700, 2701, together with the varying angular motion of the bell-crank levers on the rocking shaft, the reference letters indicating corresponding positions throughout. The result is seen to be a very great range or variation in the motion of the valves, giving on the one hand a wider steam opening and a sharp cut-off with high degrees of expansion, and on the other hand a very slow motion of the valve during the time that it is simply retaining the port closed. The whole action is obtained with a continuous and perfectly smooth motion throughout.

In the adjustment of the centres of the link-motion, the centre of the supporting lever H, Fig. 2699, is slightly lowered, so that its upper end vibrates entirely below the centre line, as shown in Fig. 2703, in order thereby to equalize the extent of tipping of the link at the two extremities of its vibration. This gives a slightly increased lead to the steam-valve opening at the farther end of the cylinder, where the motion of the piston is the more rapid on account of the smaller arc of rotation of the crank; but the point of cut-off of the valves is exactly the same at the opposite ends of the cylinder for each degree of expansion, and the point of cut-off can be varied from $\frac{1}{10}$ of the stroke to the very commencement of the stroke.

For the purpose of obtaining the full benefit of expansion, it is requisite, in addition to having the full boiler-pressure in the cylinder and providing a sharp cut-off, that superheated steam should be used, in order not only to prevent water from being carried over into the cylinder with the steam, but also to prevent any loss arising from the freshly admitted steam becoming condensed in the cylinder by contact with the cylinder surface which has been cooled in the previous expansion. About 50° Fahr. of superheating is found desirable; and this proves a more efficient mode than steam-jacketing, because the superheated steam on admission into the cylinder supplies heat to the very surfaces that have been cooled by exposure to the low-pressure expanded steam.

Speed of Piston.—One of the objects aimed at in this engine is to work at speeds considerably higher than those ordinarily used in any but locomotive engines. For the following reasons it is considered that the speed of piston should not be less than 600 ft. per minute; but these engines have been worked continuously at the higher speed of 800 ft. per minute with complete success, and it is believed that still higher speeds may in some cases be employed with advantage. The valves and the whole of the working parts are so well adapted to maintain a high speed, that the practical objections which ordinarily limit the speed of piston to lower rates do not apply in the case of the present engine.

The principal object in adopting the high speed of piston is to obtain a sufficient reciprocating force in the moving parts for balancing the initial force of the steam upon the piston when admitted at full boiler-pressure at the commencement of the stroke, so as to relieve the crank from strain on passing the centres; and also to equalize more fully the driving force upon the crank during the entire stroke. At the commencement of each stroke, an accelerating force is required sufficient to put in motion the mass of the reciprocating parts at the velocity at which the piston moves from a state of rest; and the speed of piston is adjusted so as to make this required force as great as the actual full force of the steam upon the piston when admitted at the boiler-pressure, so that the two forces are in equilibrium at that point and the crank-pin is thereby relieved from strain when passing the centre. This accelerating force imparted to the piston at the commencement of the stroke is given out again during the retardation of the piston in the latter half of the stroke, and thus compensates for the diminishing driving force of the expanding steam, and acts to equalize the driving power upon the crank. A similar action takes place in all engines, but at the speeds of piston ordinarily employed its extent is too small to produce any material effect; and it is only with a high speed that the effect becomes important, since the force required to put in motion or to stop the reciprocating parts increases as the square of their velocity of motion. Where a high speed is combined, as in this engine, with an unusual weight of the reciprocating parts and a short stroke, the inertia of these parts acts as a powerful reciprocating fly-wheel to equalize the driving power of the engine throughout the revolution of the crank.

In the present engine the weight of the reciprocating parts is 470 lbs., the cylinder 12 in. diameter by 24 in. stroke, and the number of revolutions 200 per minute, or one revolution in 0·3 second. Taking the motion of the piston in the first degree of revolution of the crank at the commencement of the stroke, the extent of motion will be the versed-sine of an angle of 1° with a radius of 1 ft., or 0·000152 ft. in the time of $\frac{1}{300}$ of 0·3 second, or $\frac{1}{1200}$ second; which is equivalent, as regards the accelerating force required to produce it, to a motion of 219 ft. in one second, the space passed through under a uniform accelerating force being in proportion to the square of the time. This motion of 219 ft. in one second is 13·7 times the effect of gravity (16·08 ft. in one second); and consequently the force required to impart the velocity amounts to 13·7 times the weight of the reciprocating parts (470 lbs.), making a total force of 6439 lbs., which is equal to a pressure of 57 lbs. per square inch upon the area of the 12-in. piston. It follows, therefore, that the steam at the full pressure of 57 lbs. may be admitted suddenly to the cylinder at the commencement of the stroke, without causing any strain upon the crank-pin; and indeed this full pressure is absolutely required upon the piston at that moment, in order to prevent a strain in the opposite direction upon the crank-pin from the inertia of the reciprocating parts.

For carrying out a high degree of expansion a high speed of piston is essentially requisite, in order that a sufficient amount of equalizing effect may be obtained from the inertia of the re-

ciprocating parts, to compensate for the extreme variation in steam-pressure which is consequent upon an early cut-off. Indeed, in consideration of smoothness of running, the engine should be run so fast that the driving force produced by the highest pressure of steam cannot exceed the inertia of the reciprocating parts; and then a knock upon the centres becomes as impossible as it would be in a revolving sling.

A high speed of piston is also advantageous on account of the reduction in size of engine required to supply a given amount of power, whereby an important saving in space and cost is effected; and also on account of the increased uniformity of motion obtained with the higher speed. Taking the case of a single engine in place of a pair of coupled engines running at half the speed, the strokes are as frequent as those of the pair of engines, while the inequalities in the rotative force are not much larger, owing to the great equalizing effects of the inertia of the reciprocating parts at the high speed. Moreover, as the regulating power of the fly-wheel increases in proportion to the square of the number of revolutions in a given time, the same wheel has four times the regulating power when run at double the speed.

The practical objections generally considered to apply to a high speed of working are, increased wear and tear, risk of hot bearings, cutting of the cylinders and pistons, and shaking loose in the fixings. But instead of any difficulties of this kind having been experienced, this engine runs smoothly and quietly, without tremor and without warming in the bearings, running continuously without requiring attention, and showing exceedingly slight wear in the cylinders, valves, and bearings. This result has been attained simply by good mechanical construction and workmanship; avoiding any unbalanced action, overhanging strains, insufficient stiffness of framing, inadequate bearing surface, or want of truth in workmanship. Unless all these conditions are carefully attended to, high speed is certainly not practicable; but when they are thoroughly carried out, no difficulty is experienced in working at any desired speed.

In the previous consideration of the effect produced by the inertia of the reciprocating parts, this has been taken as the same at each end of the stroke; but in reality a considerable difference is caused by the angular motion of the connecting-rod at the two ends of the stroke; and the actual motion of the piston during the first degree of rotation of the crank, instead of being 0·000152 ft. at each end, is 0·000178 at the outer end of the stroke, and only 0·000127 at the inner end. Consequently, from this approximate mode of calculating by the difference in motion of the piston during the first degree of rotation from each end of the stroke, the pressure on the piston required to balance the inertia, instead of being 57 lbs. an inch at both ends, as named before, would be 66 lbs. at the outer end and 47½ lbs. at the inner end. In the case of inverted vertical engines, the weight of the reciprocating parts acting vertically tends to equalize these amounts, by being added at the outer or upper end and deducted at the lower end. For this reason, and on account of the more correct support of the cylinder and the absence of overhanging strains, that form of engine seems preferable for the highest speeds.

Condenser and Air-Pump.—In the arrangement of the condenser and air-pump the object has been to meet the difficulty of combining the advantage of a simple direct-acting air-pump with the very unusually high speed of working, 200 revolutions per minute. This has been effected with complete success by the construction adopted; a vacuum of 27 in. of mercury is maintained with great steadiness, and the air-pump works quite quietly and without noise at the full speed, and keeps thoroughly in order without requiring any attention.

The air-pump, as shown in Figs. 2688, 2689, and in the transverse section, Fig. 2694, is a nearly cubical box filled with water, with a plunger working through a stuffing-box in the lower part; the plunger is attached to the piston-rod and forms a continuation of it. The end of the plunger is made of a parabolic shape, as shown in Fig. 2688, for displacing the water easily; and the plunger works entirely immersed in the water, simply displacing its own bulk of water at each stroke.

The inlet and outlet valves are all placed in the top plate of the box in two parallel rows, three inlet-valves in one row and three outlet-valves in the other, as shown in the plan, Fig. 2689. They are india-rubber disc-valves with 8 in. diameter of opening, Fig. 2694, and slide parallel upon their centre spindles without any bending of the india-rubber, being fitted with a metal plate and a long centre bush to guide the discs steadily in opening and closing, and to prevent any wear upon the edge of the india-rubber. The lift of the valves is about ½ in.; and in order to obtain a quick action in closing they are closed by spiral springs, which load the valves to the extent of ¼ lb. per square inch. These springs are found necessary upon the outlet-valves as well as the inlet, in consequence of the quickness of the action required to close them 200 times per minute; and it was found that even at the speed of 120 times per minute there was a loss of 1 lb. per inch in the vacuum when the springs were not used, from the valves not closing promptly enough.

The condenser forms one half of the chamber above the air-pump, and the hot-well the other half, as shown in Fig. 2694. The injection is introduced by a single opening in the centre of the condenser, with the full area of the pipe, in order to avoid any risk of the injection-opening getting contracted by accumulation of deposit in a spreader or rose; and it has been found that no perceptible difference is caused by this arrangement in the vacuum obtained with the injection. In consequence of the position of the valves in the top plate of the air-pump chamber, the air entering from the condenser does not pass through the water, but simply passes over the surface of the water from the inlet to the outlet valves: and the water rising up to the outlet-valves at each stroke ensures the discharge of the whole of the air. As no air gets to the lower portion of the air-pump chamber, the plunger works always in solid water, avoiding any churning action of mixed water and air; and indeed the effective piston of the air-pump may be considered to be, not the plunger, but the surface of the body of water that always remains in the air-pump chamber, which rises and falls at each stroke of the pump through a distance of less than 1 in. The working velocity of the air-pump piston is therefore reduced in effect to only about 30 ft. per minute, instead of 800 ft. per minute, the actual velocity of the plunger.

For the purpose of facilitating the passage of the air from the inlet to the outlet valves, the former are set at a small inclination below the horizontal position, as shown in Fig. 2694. The arrangement and position of this condenser and air-pump are very convenient for access to all the parts, the whole being above ground and at the level of the engine. It is held steady in its position by a connecting-tie to the frame below and by the fixing of the exhaust-pipe above; and it serves as an additional guide for the smooth working of the piston-rod beyond the cylinder. The weight of the plunger moving at the full velocity of the piston serves also as an important addition to the compensating action of the inertia at the commencement and end of each stroke.

Governor.—The expansion-gear of the engine is regulated entirely by the self-acting movement of the governor, Figs. 2688, 2689; and for carrying this plan out satisfactorily it is essential to have a governor that is extremely sensitive to any change of velocity, and acts with great promptness upon the expansion-gear, with power sufficient to shift it instantly to the full extent required. The governor used for the purpose has been designed by the writer as a modification of the ordinary Watt centrifugal governor, with the view of increasing its sensitiveness and quickness of action, and adding to the power available for overcoming the resistance of the valve-motion. This resistance is, however, reduced to a very small amount in the present engine, on account of the valves being in equilibrium.

The governor is shown in Figs. 2695, 2696, and consists of two revolving balls of small size, but moving at a high velocity, which pull up a heavy central weight when they rise in consequence of an increased velocity of revolution: the balls are only about 2 to 3 lbs. weight, but the central weight is from 50 to 300 lbs., according to the size of the governor. The connection of the radius rods to the centre spindle is made with forked ends, having considerable width of fork, as shown in Fig. 2695, and fitting upon a pin which passes through the axis of rotation, Fig. 2696. The friction which opposes the rise and fall of the balls is thus reduced, by the pressure upon the pin at the joints of the rods being diminished in consequence of their increased leverage; and the sensitiveness of the governor is thereby increased, its friction being much less than that of the ordinary governor.

With the very heavy revolving balls employed in the ordinary construction of governor, a large amount of resistance is opposed by their inertia when they are required to act, by rising or falling, on the occurrence of a change in the velocity of revolution. A serious pressure is also caused on the joints of the radius rods when the inertia of heavy balls of 1 cwt. each has to be overcome in order to accelerate their motion; and the friction caused by this pressure on the joints prevents the change of position of the balls until a sufficient increase of velocity has occurred to accumulate force enough for overcoming this resistance. The engine is thus allowed to vary considerably in speed; and the balls of the governor are then liable to fly out too far, causing too great an action for properly regulating the speed of the engine. In the present governor the revolving balls, being of very small weight, offer little resistance by their inertia to any change, and they rise or fall instantly when any change takes place in the speed of revolution of the engine. Their centrifugal force is made up to that of the ordinary heavy balls by their increased velocity of revolution, the centrifugal force increasing as the square of the velocity; and they are driven at a speed of from 320 to 400 revolutions per minute.

This governor is liable to the same objection in principle as the ordinary Watt centrifugal governor, namely, that it can only regulate the engine for a variation of load by maintaining a corresponding change of velocity in the engine; but in this governor the action is so much more sensitive and extended than in the ordinary governor, that this objection is practically got rid of. It is found to regulate the speed of the engine with certainty within the range of 2 per cent. variation of speed, with the greatest extent of variation that can occur in the load; and a variation in speed of 5 per cent. would carry the governor through its entire range of action, and shut off the steam from the engine. In practice the steam stop-valve is always set wide open, and the engine runs under all circumstances with complete steadiness and uniformity of motion, without requiring any attention; and the most sudden and extreme changes of load do not affect its motion perceptibly.

Special Construction.—In practically carrying out the high speed of working that has been adopted in this engine, special attention has been required to ensure the rigidity of both the stationary and the moving parts, to balance the forces of the moving parts, and to obtain a large extent of hardened rubbing surface, with perfect truth of form in the wearing parts. When due attention is paid to these points, it is found that there is no practical difficulty attending the employment of the high speed; and the objections ordinarily felt to it arise really from imperfections of construction in these respects.

For the purpose of obtaining the required rigidity in this engine, the base-plate is made a hollow casting of great stiffness and unusual depth, and the centre line of strain of the engine is brought down very near to its surface. The cylinder is bolted to the end of the base-plate, and is held all round the circumference of its inner end; but it is left free from the base-plate throughout its entire length. The object of this arrangement is to leave the cylinder free to expand and contract, without the tendency to distortion which arises when the cylinder is fixed down throughout one side to a cold base-plate, whilst kept heated along the other side by the steam-chest. The cylinder thus preserves its parallelism when at work, so that a deep and well-fitted piston can be used; the piston employed is a plain hollow block, turned a close fit to the cylinder, and fitted with two Ramsbottom rings. The result is that, instead of the injurious wear often experienced in horizontal cylinders working at the lower speeds, the cylinders of these engines are found to be always in a polished and greasy condition, and their wear is inappreciable.

In all the working parts of the engine the bearings are made both unusually long and large in diameter, and by this means the pressure per square inch on the bearing surfaces is diminished, so that a thicker film of oil is maintained between them, reducing the coefficient of friction. The smoothness of running is thus increased also, by avoiding the injurious effects that arise from the

bearings not having sufficient rigidity to resist flexure or torsion. In all the bearings special care is taken to obtain perfect truth of form, which is a point of great practical importance; and if properly formed and hardened, these bearings should not be subjected to wear at all. The difference in working is remarkable between a true cylindrical form and such an approximation to it as can be produced by turning in a good lathe. When a truly cylindrical journal or pin has been produced by the operation of grinding with a traversing wheel, in dead centres which have themselves been ground to true cones, such a cylinder, if it has sufficient surface and rigidity, and is fitted in proper bearings, floats in an oil bath, being separated from the bearings at every point by a film of oil of exactly uniform thickness: this film cannot anywhere be broken, and having scarcely any disposition to work out, will last without renewal for a great length of time; and the coefficient of friction under pressure is thereby greatly diminished. This truth of form is really easy of attainment, and if its value were fully appreciated, it would certainly be obtained in general practice.

R. Wilson's Direct-acting Engine.—This engine is specially designed for the purpose of supplying water under a high pressure to hydraulic machinery, and has been extensively applied to the working of cotton presses. It is usually made in pairs (to secure a uniform delivery of water), each pair consisting of two steam-cylinders and four pumps coupled together, as shown in Figs. 2704, 2705, which represent two views of a complete pair of engines. The arrangement and action of

2704.

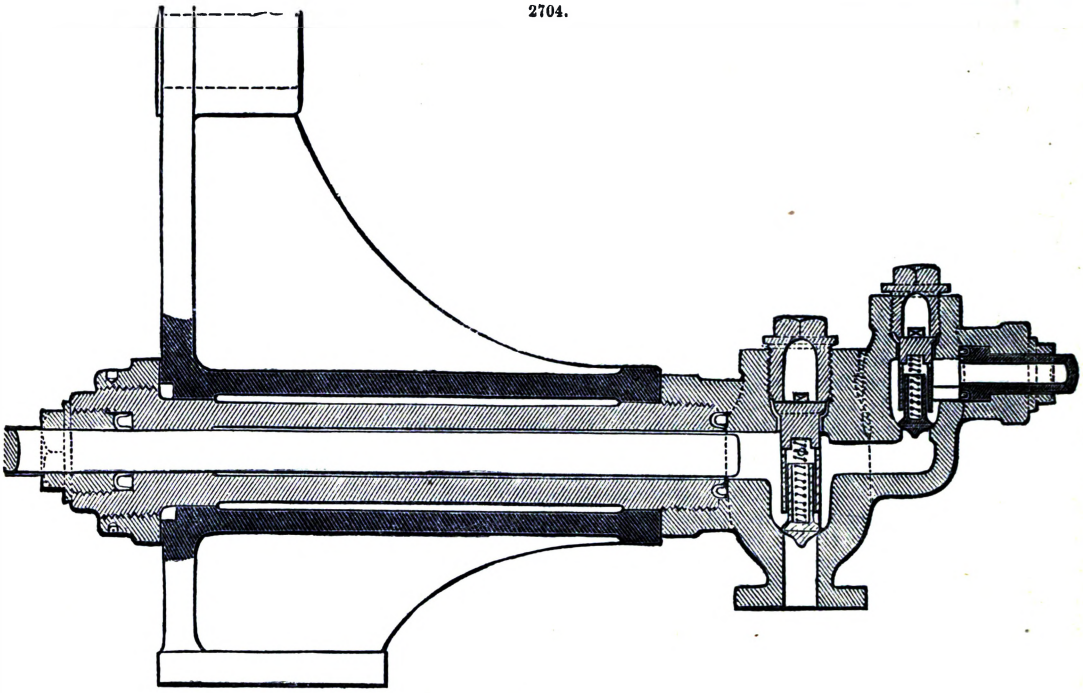

2705.

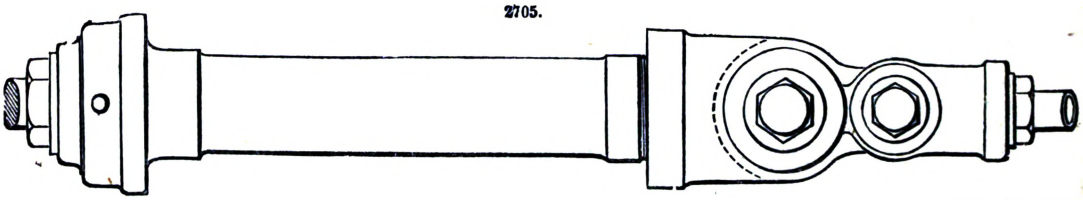

the engines will be readily understood by reference to Fig. 2706, which is a longitudinal section through one engine, or say one steam-cylinder and two pumps. A is the steam-cylinder; B B′ the pumps; C, steam-piston; D, piston-rod extending through both ends of cylinder; E E′ are pump-rams attached directly to the piston-rod, one at each end; F F′ the suction, and G G the delivery pipes, each with their respective valves. At the junction of the pump-rams with the piston-rod at each end is a cross-head with a pair of slide-blocks working in slides H H. To the cross-head H is attached one end of a forked connecting-rod I, the other end of which is connected to the crank and crank-shaft with fly-wheel, as in an ordinary steam-engine. The other steam-cylinder and pair of pumps are attached to the same crank-shaft at right angles to those already described, by this means ensuring the pumps to be alternately brought into action, and therefore—the pumps being all connected to one delivery-pipe—secures a continuous uniform discharge of water.

It will be seen that if steam be admitted into the steam-cylinder at the right-hand end J, the piston will be pushed forward in the direction of the arrow by the full force of the steam, and the water contained in pump B is expelled by the pump-ram E, and passing over the suction-valve, which it keeps down, finds an outlet through the delivery-valve into the pipe G, at a high pressure.

The difference in pressure between the steam in the cylinder and the water passing out of the pumps is directly proportional to the areas of steam-cylinder and pump-ram respectively. In the engines illustrated the diameter of steam-cylinder is 24″, and of the pump-ram $1\frac{11}{16}$″, so that a pressure of steam, say 35 lbs. a square inch in the cylinder, will give a pressure of water in the delivery-pipes of over 3 tons to the square inch. While the pump B has been delivering its water, B′ has been receiving its supply through the suction-pipe F, and when the return stroke is being made the operation is reversed, the pump B receiving its water supply through suction-pipe F, and pump B delivering the water into pipe G. All the suction-pipes are joined together and connected to a tank, which contains a sufficient supply of water for the number of machines to be worked. The delivery-pipes are also joined into one main pipe, which conveys the high-pressed water to the machines, and after being used is returned to the tank to be used as a fresh supply over and over again without loss. The distribution of steam to the cylinders is effected as in an ordinary steam-engine. The slide-valves, which are constructed on R. Wilson's plan, are perfectly balanced, and capable of being moved with the greatest ease, avoiding the usual wear and tear of valve-gear and effecting a great saving in the consumption of fuel. The valves are worked by means of eccentrics on the crank-shaft. The engine is fitted with two governors; the one marked K is of the ordinary ball construction, and the other, L, termed the hydraulic governor, is acted upon by the pressure of water in delivery-pipes. Each of these governors is independent of the other, and at perfect liberty to control the engine, by means of a throttle-valve, which is common to both. The object of this combination is that the engine may be controlled and kept at a uniform speed by the ball governor when the pumps are disconnected, and the engine used for driving other machinery (as an ordinary engine). When the pumps are connected and the pressure of water rises, the engine requires more steam, the hydraulic governor is by that pressure caused to act upon the throttle-valve to open it, and when the pressure lowers, the governor closes the throttle-valve and gives less steam, so keeping the engine at a uniform speed under its varying load.

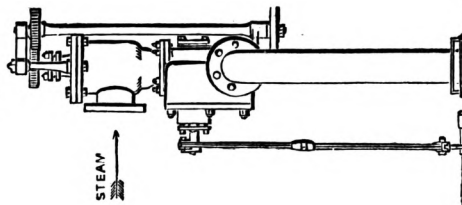

2706.

Prospect Hill Pumping Engine, Brooklyn, U.S.— Fig. 2707 represents a section in outline of the pumps and an elevation of the pumping engine at Prospect Hill.

It will be observed that the engine is of the crank and fly-wheel system of arrangement, and in this respect is entirely different from the engine at Ridgewood. The steam-cylinder S is fitted with slide-valves, and a cut-off controlled by a governor constructed in accordance with the invention of Wright. The speed during the experiments was varied by weights suspended to the governor-rods. The pumps are constructed on the same general principles and mode of action as the pumps usually employed. They are two pumps, attached to opposite sides of the working beam; they have valves in their buckets, and in channels at the sides of the pump, shown in Fig. 2707. The pumps are placed in a branch main, and the water flows into and through the air-pumps under a considerable head, variable with the draught upon the mains in other parts of the city. There are two air-chambers: one shown at R on the rising main; the other, and a somewhat larger one, is connected by a branch pipe with the induction-pipe at E. At A are the connections with the air-pump. At *p* the connections of a small single-acting plunger-

pump, to supply the boiler-feed, and return the injection-water to the main. By P is denoted the lower pump; by P′ the upper; *a*, *b*, and *c*, represent the apertures in connection with the indicator.

2707.

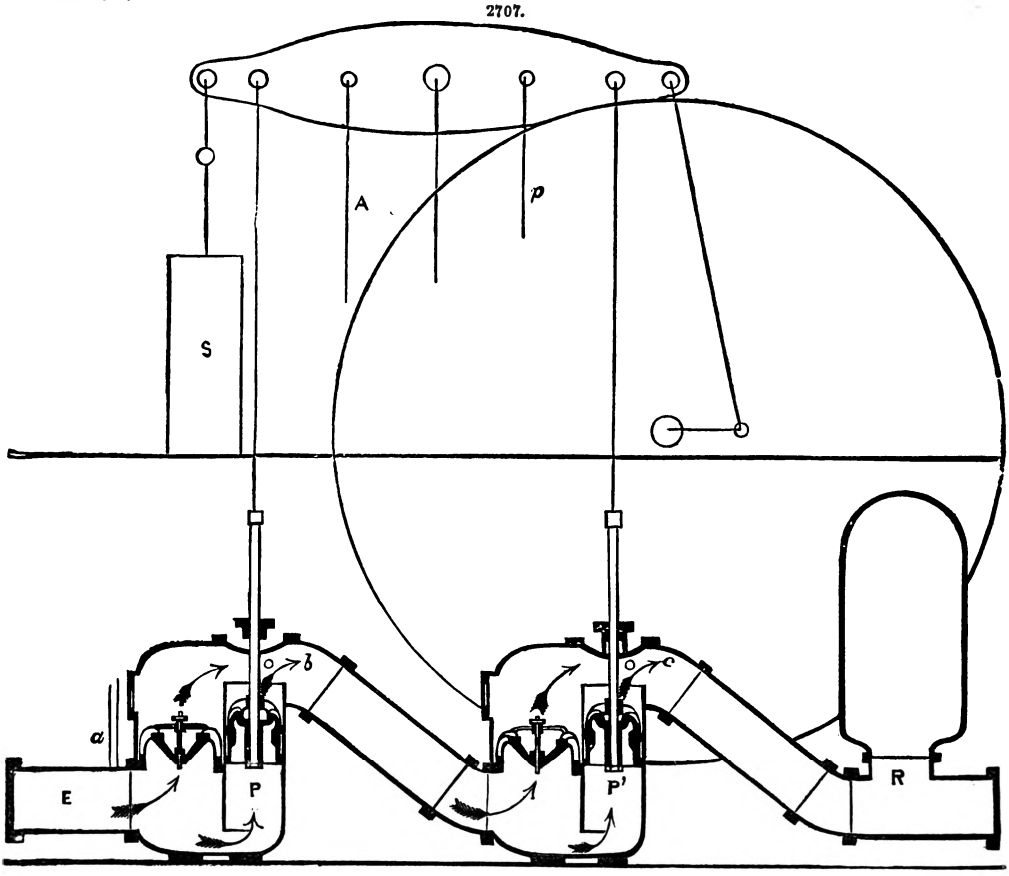

Dimensions.—Steam-Cylinder.—Length of stroke, 4 ft. 6 in.: diameter of cylinder, 24 in.; diameter of piston-rod, 3¼ in.

Pumps.—Length of stroke (average), 3·466 ft.; diameter of barrels, 20¼ in.; diameter of piston-rods, 3 in.

Pump to turn Injection-water into the Main.—Length of stroke, 1·604 ft.; diameter of plunger, 8 in.

Fly-wheel.—Diameter, 20 ft.; length of crank, 27 in.

Boiler—One, Drop Flue.—Length of shell, 18 ft.; diameter of shell, 6 ft.: length of fire-grate, 5 ft.; width of each fire-grate during trial, 2 ft. 2½ in.: number of upper flues, 4; diameter of upper flues, 13 in.; length of upper flues, 11 ft.: number of lower flues, 9; diameter of lower flues, 7 of 9 in., 2 of 7 in.; length of lower flues, 9 ft. 3 in.

Explanation of Coaling Profile.—The profile of the coaling for seventeen hours will serve as an explanation of the form in which the register of coal consumed has been kept and plotted during the late experiments at Ridgewood and Prospect Hill. The hours selected have been taken rather than those at the commencement of the experiments, as profiles of steam and water pressures are given for the same period.

The firing was commenced on the morning of May 13, 1862, and the fires and water were got into the state in which it was determined to keep them as nearly as possible uniform. The coal was first noted at 0 h. 14 m. P.M., when 100 lbs. were thrown on one of the grates; at 1 h. 2 m. 100 lbs. on the other: at 1 h. 55 m., 60 lbs. on the first grate, and at 2 h. 32 m., 20 lbs. on the second. In this way the quantity of coal was taken every time any was put on, and on which grate it was thrown. The fire-box was divided in two by a brick wall, to maintain a more even fire. The coal was weighed in lots of 100 lbs. each, and the amount at each firing was then estimated. At

6.56 P.M.	.. ..	the total quantity fired was	1155 lbs.
7.43 „	.. ..	90 lbs.	1245 „
8.12 „	.. ..	100 „	1345 „
9.03 „	.. ..	Cleaned fire No. 2.	
9.10 „	.. ..	120 lbs.	1465 „
9.47 „	.. ..	115 „	1580 „
10.27 „	.. ..	80 „	1660 „
10.58 „	.. ..	80 „	1740 „
11.30 „	.. ..	60 „	1800 „

12.00 P.M.	Cleaned fire No. 1.	
12.06 „	100 lbs.	1900 lbs.
12.37 „	50 „	1950 „
12.56 „	50 „	2000 „
1.25 A.M.	70 „	2070 „
1.47 „	80 „	2150 „
2.22 „	50 „	2200 „
2.42 „	70 „	2270 „
3.02 „	90 „	2360 „

and so on. Each of the firings is represented by dots on the profile, and the dots are connected by lines. In this way the firing is graphically represented, Fig. 2708, and the quantity consumed during a period of a few hours can be quite accurately determined.

The firemen had been employed on board of ocean steamers, and had never been inside of the building till the experiments were commenced. They were directed to keep the water, as near as possible, a certain level, and their fires always in one condition. The boiler-pressure was varied from time to time, to test the comparative economy of the engine under different pressures and speeds. The watch of the firemen was twelve hours on and twelve off.

The coal used during the whole trial;—

	Lbs.
Of Delaware and Hudson Canal coal	11,800
Buck Mountain	2,360
Total	14,160
The total quantity of clinker ..	645
Small coal in ashes	383

2708.

COALING PROFILE.

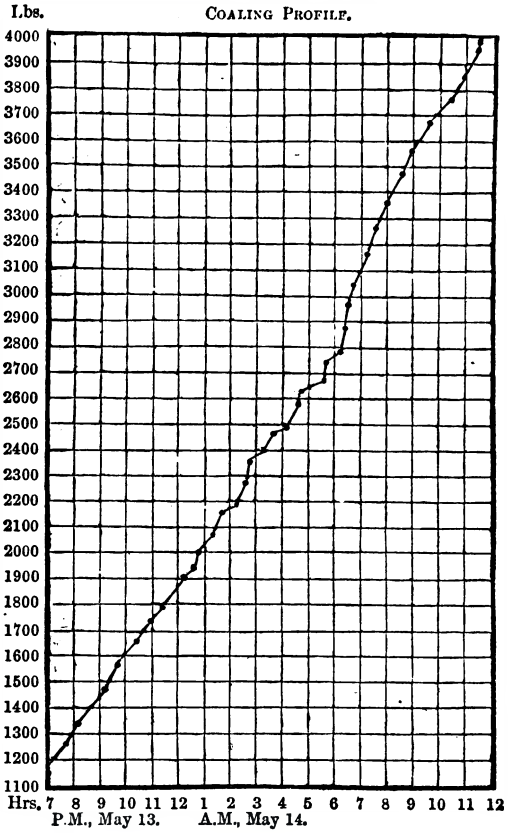

TABLE OF RESULTS OF EXPERIMENTS MADE ON PROSPECT HILL PUMPING ENGINE, MAY 13TH, 14TH, 15TH, 16TH, AND 17TH, 1862.

Date, 1862.		Number of Revolutions during the Hour.	Average. Mean Steam-Pressure per square inch in Steam-Cylinder.	Mean Water-Load per square inch in Pumps.	Boiler-Pressure per square inch.	Vacuum in Condenser.	Steam-Cylinder. Initial Pressure.	Cut-off. Full Stroke, 1·00.	Final Pressure below 0.	Gross Amount of Coal consumed during the Hour.	Remarks.
		1	2	3	4	5	6	7	8	9	
Day.	Hour.		lbs.	lbs.	lbs.	inches.	lbs.		lbs.	lbs.	
May 13	8 P.M.	1478	22·3	28·7	47·6	27·3	42	·15	3·5	140	7 h. Ryan commenced firing.
	9 „	1487	21·7	27·8	47·3	27	39	·15	5	145	9 h. 3′ cleaned No. 2 fire.
	10 „	1482	21·2	26·8	45·7	27	40	·18	5·5	160	
	11 „	1494	20·4	26·25	45·0	27·4	39·5	·14	6	140	
	12 „	1523	19·6	26·0	46·1	27·2	37	·15	6·5	140	12 h. 3′ cleaned No. 1 fire.
May 14	1 A.M.	1578	19·15	25·5	45·1	27·2	35	·15	6	125	
	2 „	1600	19·15	25·25	44·3	27·5	34	·15	6	160	
	3 „	1638	19·25	26·6	46·5	27·5	38	·16	6	183	
	4 „	1686	19·5	27·3	48	27·5	38·5	·15	5·5	121	
	5 „	1720	20·1	27·8	48·5	27·5	39	·16	5·5	160	
	6 „	1775	21·9	20·3	47	27·5	38·2	·20	4	130	6 h. 30′ Kenny commenced firing.
	7 „	1771	23·75	32·1	47·5	27·5	39	·20	4·5	285	
	8 „	1680	24·5	33·9	45	27·5	35·5	·17	3·5	260	
	9 „	1679	23·9	34·75	49·7	27·5	41	·19	3·5	210	9 h. 18′ cleaned No. 1 fire.
	10 „	1675	24·1	35·15	45·8	27·5	41	·18	4·5	170	
	11 „	1670	24·1	34·9	45·6	27·5	42·5	·18	3·5	150	
	12 „	1669	23·4	33·5	51·1	27·5	42	·18	4	200	
	1 P.M.	1645	23·35	33·35	49	27·5	42	·18	4	200	
	2 „	1663	23·45	33·75	48·5	27·5	41	·19	3·5	190	2 h. 20′ cleaned No. 2 fire.
	3 „	1663	23·6	33·65	44·1	27·4	36	·19	3	220	
	4 „	1664	23·55	33·25	48·0	27·5	41·5	·15	3·5	213	
	5 „	1681	23·15	33·7	46·2	27·4	37·5	·18	3·5	185	
	6 „	1514	23·3	32·3	46·8	27·6	39·5	·16	4·5	120	6 h. 25′ Ryan fires.

TABLE OF RESULTS OF EXPERIMENTS, &c.—*continued.*

Date, 1862.		Number of Revolutions during the Hour.	Average. Mean Steam-Pressure per square inch in Steam-Cylinder.	Mean Water-Load per square inch in Pumps.	Boiler-Pressure per square inch.	Vacuum in Condenser.	Steam-Cylinder. Initial Pressure	Cut-off. Full Stroke, 1·00.	Final Pressure below 0.	Gross Amount of Coal consumed during the Hour.	Remarks.
		1	2	3	4	5	6	7	8	9	
Day.	Hour.		lbs.	lbs.	lbs.	inches.	lbs.		lbs.	lbs.	
May 14	7 P.M.	1289	21·4	29·1	49·7	27·7	39·2	·15	4·5	125	
	8 „	1288	20·1	27·55	48·0	27·2	38·5	·14	5·5	105	
	9 „	1285	19·0	26·5	48·0	27·2	37·5	·15	6	110	
	10 „	1286	18·5	28·8	48·5	27·6	37	·14	6·5	140	10 h. cleaned No. 1 fire.
	11 „	1293	18·5	27·3	48·0	27·7	36·5	·15	6	150	
	12 „	1299	18·4	25·05	46·5	27·7	36·5	·15	6	120	
May 15	1 A.M.	1279	18·0	24·45	46·75	27·7	35·5	·15	6	120	
	2 „	1280	17·55	24·45	47·5	27·7	34·5	·13	6	130	2 h. 5′ cleaned No. 2 fire.
	3 „	1286	17·2	23·9	45·5	27·5	34·5	·12	6	125	
	4 „	1281	16·95	24·3	45·5	27·2	34·5	·13	6·5	116	
	5 „	1279	17·7	25·8	45·2	27·5	34·5	·14	6·5	140	
	6 „	1286	19·3	28·6	46·5	27·7	38	·17	5·5	110	6 h. 21′ Kenny fires.
	7 „	1276	21·55	31·7	45·5	27·7	38	·20	4·5	153	
	8 „	1258	22·65	33·55	37·5	27·7	32	·25	4·5	161	
	9 „	1255	22·35	33·5	33·5	27·9	29·5	·25	4	190	9 h. 25′ cleaned No. 1 fire.
	10 „	1254	21·85	32·1	34·7	27·9	31·5	·24	3·5	190	
	11 „	1256	21·3	30·5	34	27·9	30·5	·23	3·5	169	
	12 „	1258	21·1	30·0	34·5	28	31	·23	3·5	140	12 h. 32′ cleaned No. 2 fire.
	1 P.M.	1231	20·95	30·0	35·5	28	31·5	·20	4	150	
	2 „	1266	20·85	30·8	35·0	28	33	·24	4·5	110	
	3 „	1255	20·3	30·5	35·5	28	30	·22	5	134	
	4 „	1260	20·15	29·7	36	28	31·5	·21	5	110	
	5 „	1256	20·25	29·55	33	28	29	·23	4	115	
	6 „	1264	20·75	29·9	31·5	28	28·5	·26	4	119	6 h. 40′ Ryan fires.
	7 „	1233	20·75	30·65	33·5	27·7	29	·26	3·5	100	
	8 „	1277	19·9	27·6	32	27·5	25·5	·23	3·5	96	
	9 „	1260	18·6	26·8	31·5	27·5	25·5	·20	5	90	9 h. 38′ cleaned No. 2 fire.
	10 „	1264	17·95	26·65	31·5	27·5	24·5	·19	5·5	120	
	11 „	1267	17·8	26·4	31·5	27·5	26·5	·18	5·5	195	11 h. 18′ cleaned No. 2 fire.
	12 „	1266	17·9	25·95	32	27·5	25·5	·22	5·5	144	
May 16	1 A.M.	1252	17·7	25·5	27	27·6	21	·27	5	141	
	2 „	1244	17·35	25·35	21·5	27·7	17	·30	4·5	130	
	3 „	1241	17·35	25·35	21	27·6	17	·33	3·5	100	
	4 „	1238	17·5	25·35	21	27·6	17·5	·28	3·5	140	
	5 „	1239	17·8	25·9	20·5	27·7	17	·30	4	130	6 h. 30′ Kenny fires.
	6 „	1233	18·3	27·8	19·5	27·6	15·5	·42	2·5	160	
	7 „	1229	19·15	30·4	20	27·4	16·5	·38	1	164	
	8 „	1198	20·5	31·95	21	26·9	20	·37	1	125	8 h. 55′ cleaned No. 1 fire.
	9 „	1204	21·15	32·3	20	26·5	19·5	·43	1	130	
	10 „	1203	20·7	31·9	20·5	26·5	18·5	·38	1	150	10 h. 14′ cleaned No. 2 fire.
	11 „	1175	20·4	31·15	20	27	19	·35	2·5	204	
	12 „	1262	21·3	31·15	23	27·5	23	·31	2·5	205	12 h. 10′ Ridgewood fireman commenced firing.
	1 P.M.	1490	22·5	33·3	38	27·5	33	·18	3	155	
	2 „	1480	22·5	34·15	49	27·7	43	·19	3·5	120	
	3 „	1482	21·7	34·1	48·5	28·2	40·5	·19	3·5	190	3 h. 56′ cleaned No. 1 fire.
	4 „	1482	21·5	34·61	48·5	28·2	41	·20	3·5	165	
	5 „	1431	21·3	35·75	48·5	27·9	40	·18	4·5	190	
	6 „	1405	21·4	32·15	49	28	40	·19	4·5	195	6 h. 40′ Ryan fires.
	7 „	1403	21·35	32·35	48	27·9	40	·20	4	180	
	8 „	1406	21·45	31·7	49	27·5	40·5	·18	4	160	
	9 „	1404	21·5	30·0	50	27·5	41	·17	4·5	170	
	10 „	1408	20·7	28·75	49·5	27·5	40	·17	4·5	145	
	11 „	1396	19·4	27·95	49	27·5	38	·15	5·5	165	11 h. 50′ cleaned No. 2 fire.
	12 „	1356	18·7	27·15	47	27·6	37	·16	5·5	180	
May 17	1 A.M.	1267	18·3	26·7	47·5	27·6	34·5	·05	4·5	120	
	2 „	1313	18·6	26·75	49·5	27·5	32·5	·07	4·5	120	
	3 „	1308	19·15	26·95	49	27·5	31	·12	4·5	130	
	4 „	1333	20·0	27·15	49·5	27·5	35	·18	4·5	120	
	5 „	1385	20·75	28·5	48·5	27·5	39·5	·13	4·5	120	5 h. 30′ cleaned No. 1 fire.
	6 „	1382	20·95	32·8	47·5	27·1	39·5	·20	3·5	144	6 h. 30′ Ridgewood fireman commenced firing.
	7 „	1376	23·3	35·5	48	27	42·25	·21	2·5	166	
	8 „	1376	24·3	36·7	47·5	27	42·5	·21	2·5	150	
	9 „	1375	24·0	37·5	47	27	41	·22	2·5	150	

Ommanney and Tatham's Horizontal Pumping Engine.—This engine, Figs. 2709 to 2711, consists of a pair of horizontal double-acting pumps coupled together, as shown in Fig. 2711; it is placed in a

2709.

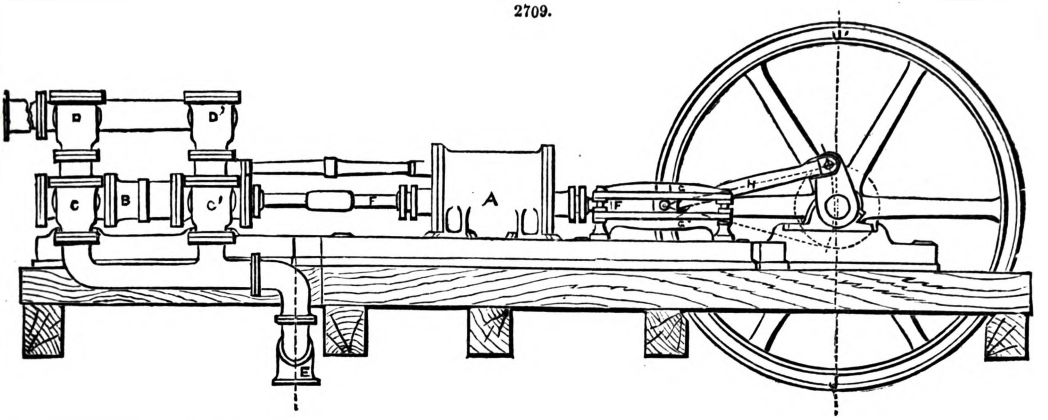

2710.

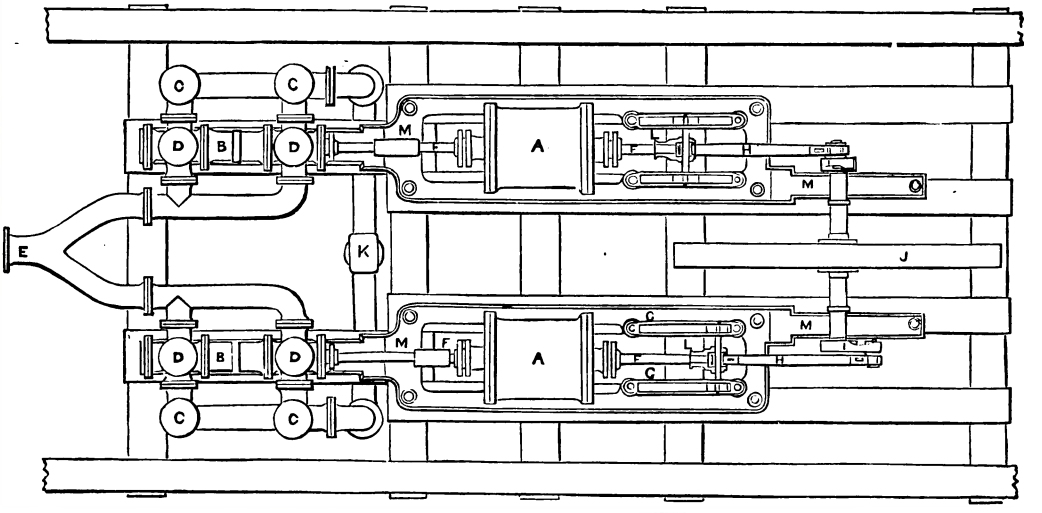

2711.

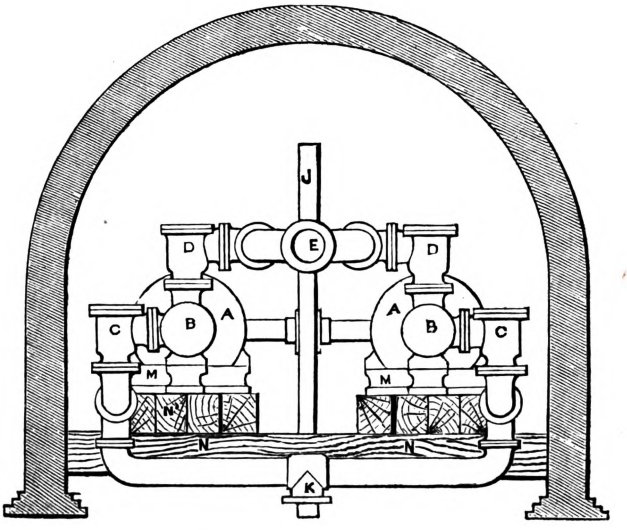

coal-pit in Staffordshire to force water up a vertical shaft of 900 ft. at one lift. The cylinders of this engine are 43 in. diameter and 36 in. stroke; the pumps 10½ in. diameter with brass Cornish *valves*.

In Figs. 2709 to 2711, of Ommanney and Tatham's engine, A A are the cylinders; B B, pump-barrels; *c c*, suction-clacks; E, the main delivery-pipe; F F, piston-rods; G G, slide-bars; H H, connecting-rods; I I, cranks; J, fly-wheel; K, main suction-pipe; L L, cross-heads; M M, engine-beds; N N, supporting beams.

Tank Locomotive for Turning Sharp Curves.—We illustrate an arrangement for giving lateral play to the axles of locomotive engines, which has been lately designed and introduced with much success by Black, Hawthorn, and Co., of Gateshead-upon-Tyne, Figs. 2712 to 2714. Our figures show the arrangement as applied to the trailing axle of a class of six-coupled tank engines constructed for working the

traffic on colliery lines and similar branches, a class of work for which they are well adapted. This arrangement is nothing more than a substitute for the American *lateral motion beam*. On such lines sharp curves and heavy gradients are generally to be met with, and the engines employed on them should thus possess good hauling power, and yet should be carried on a short or flexible

2712.

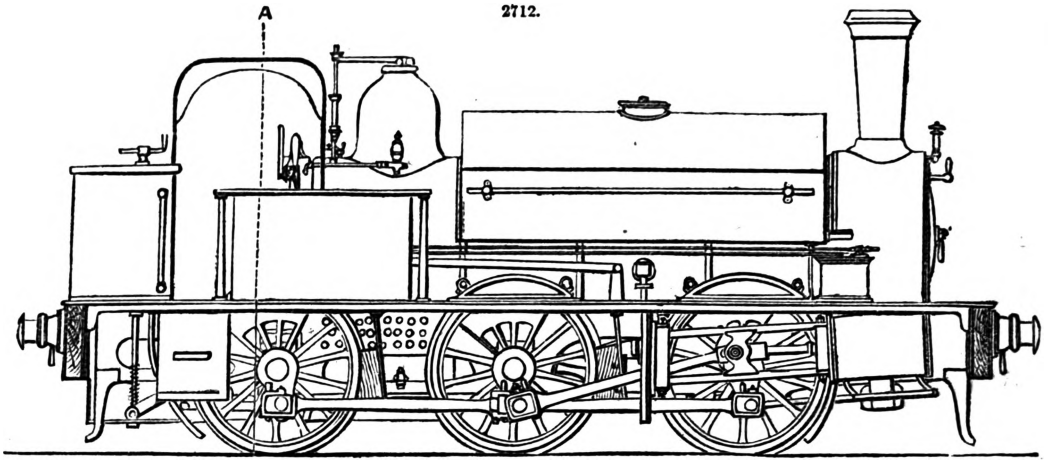

2714

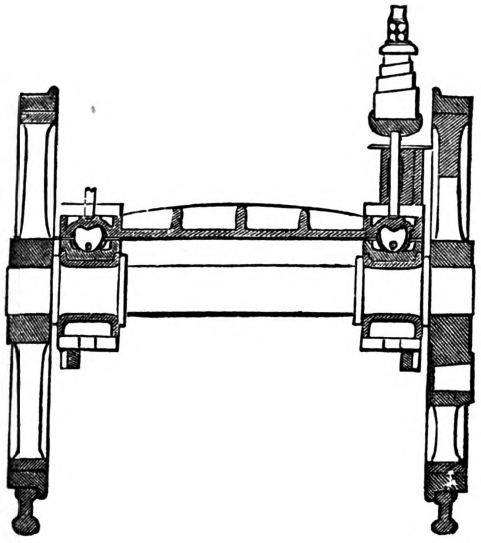

2713.

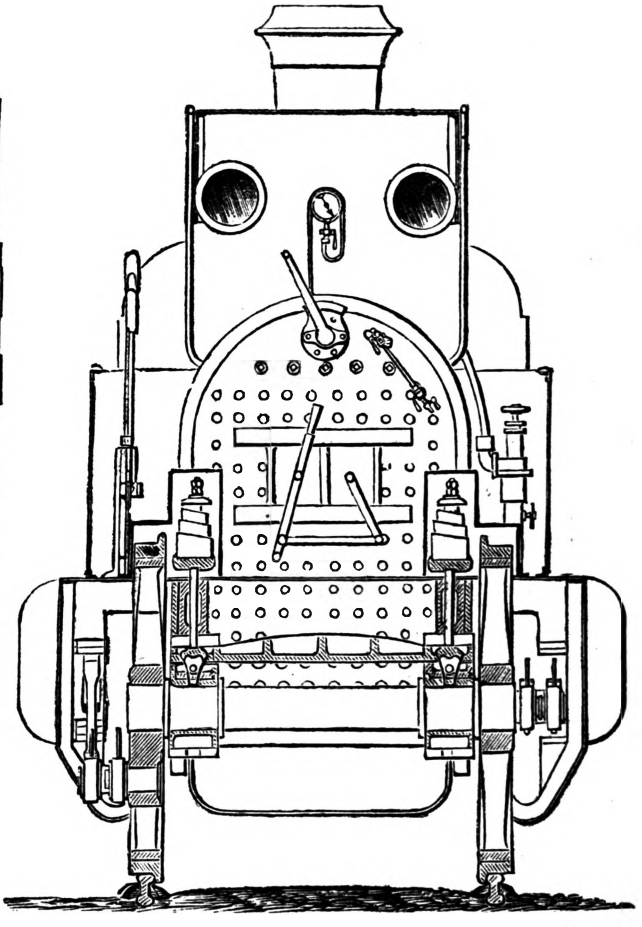

wheel base. For lines of this kind, where there is usually much shunting to be done, and where there are seldom facilities for turning the engine, tank locomotives are far superior to those with tenders, as indeed they also are for a great proportion of ordinary main-line traffic.

The engine to which our figures refer has outside cylinders 16 in. in diameter, with 24 in. stroke, and the six coupled wheels are 4 ft. 6 in. in diameter, and are arranged with a total wheel base of 12 ft. 9 in., the trailing axle to which the arrangement for giving lateral motion is applied being behind the fire-box. The quantity of water carried is about 950 gallons, part of this quantity being contained in a saddle-tank, and the remainder—about one-fourth of the whole—in a tank placed beneath the foot-plate at the trailing end. As this latter tank is at a lower level than the saddle-tank, the water in it is not used until the latter is empty, and it is therefore generally full of water, thus increasing the load on the trailing axle, which in six-coupled tank engines of this class is

generally too lightly loaded. The fuel is also carried at the trailing end, where there is a box capable of carrying about 35 cwt. of fuel. The weight of the engine is as follows;—

	Tons.
On leading wheels	11½
„ centre „	12
„ trailing „	9
Total	32½

The frame is of plates $1\frac{1}{16}$ in. thick, and is very strongly braced by cross and diagonal stays; cylinders are secured to each other by a strong box-girder, thus being, as it were, self-contained, and preventing a separate and independent strain on frames. All the working parts and tires are steel, and the slide-valves are equilibrium-valves. The boiler is double riveted in the longitudinal seams, the holes for rivets in all flanged plates being drilled instead of punched, and the whole of the boiler-plates being planed on all edges before being put together. The engine is worked at a pressure of 140 lbs. to the square inch.

Referring to Figs. 2712 to 2714 it is observable that the pressure of the trailing springs is received upon a casting which extends from one side of the engine to the other above the axle-boxes, this casting having at its under-side recesses and projections, which fit the upper edges of a pair of cams which are interposed between the casting and the axle-box crowns. These cams, which are made of steel, are heart-shaped, and they are retained in position by pins, which connect them to the axle-boxes. The axle-boxes are free to move laterally in their guides for a certain distance, and as they move to one side the cams each turn on one of their upper corners. It follows, from the shape of the cams and the relative positions of their bearing points, that when the axle is thus moved over to one side, the action of gravity tends to bring it back to its central position, and the movement, therefore, does not take place with any slight or ordinary oscillation of the engine, but is only caused when a certain pressure comes against the flanges of the wheels as the engine traverses a curve. It also follows, from the nature of the arrangement, that the pressure requisite to cause lateral movement increases in a certain proportion as the distance of the axle from its central position increases. The whole arrangement is very simple, and can be applied to existing engines in all cases where there is nothing to interfere with the lateral traverse of the wheels.

Oscillating Engine invented by James Hamer, of London. Referring to Fig. 2715, it will be seen that the cylinder of this engine is fixed upon a ball K, which works steam-tight in a cup M fixed to the bed-plate, this cup being provided with two ports or passages, the one being in communication with the boiler, and the other with the exhaust-pipe, by means of the pipes R, R. The ball has three ports formed in it, the central one communicating with the bottom, and the two outer ones with the top of the cylinder, these two outer ports being connected by an annular groove formed in the ball around the central port. The use of this annular groove is to enable the outer ports to communicate with the ports in the cup even when the cylinder has turned round so that a line drawn through the three ports in the ball would lie at right angles to the plane of oscillation of the cylinder.

2715.

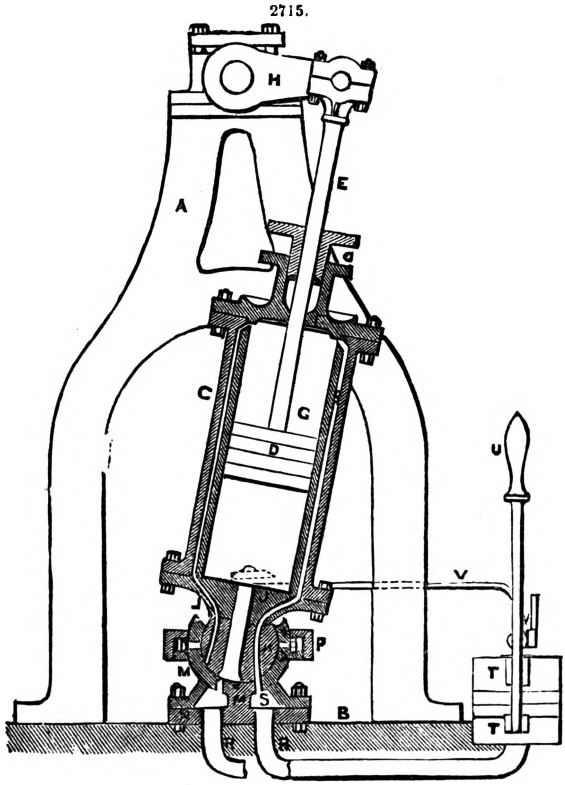

The ball is kept in place by a cap O and screwed ring P, and it will be readily understood that as the cylinder oscillates the movement of the ball in the cup regulates the admission and egress of the steam in the same way as an ordinary slide-valve having neither lap nor lead. It is found in working that a constant slow rotating movement of the cylinder takes place, and this movement conduces greatly to the equal wear of the cup-and-ball surfaces. To reverse the engine Hamer simply alters the course of the steam, making that which was the exhaust-pipe the steam-pipe, and *vice versâ*. Steam is led from the boiler to the chamber in which the valve T works; and by moving the valve T by means of the lever U, the engine can be stopped or started in either direction at pleasure. Hamer's arrangement, with a fly-wheel, will be found useful where the power required is not great.

Winding Engine of Fletcher, Jennings, and Co.—This engine, Figs. 2716 to 2718, which has been made at a hematite iron-ore mine in the Cumberland district, although it does not present many

2716.

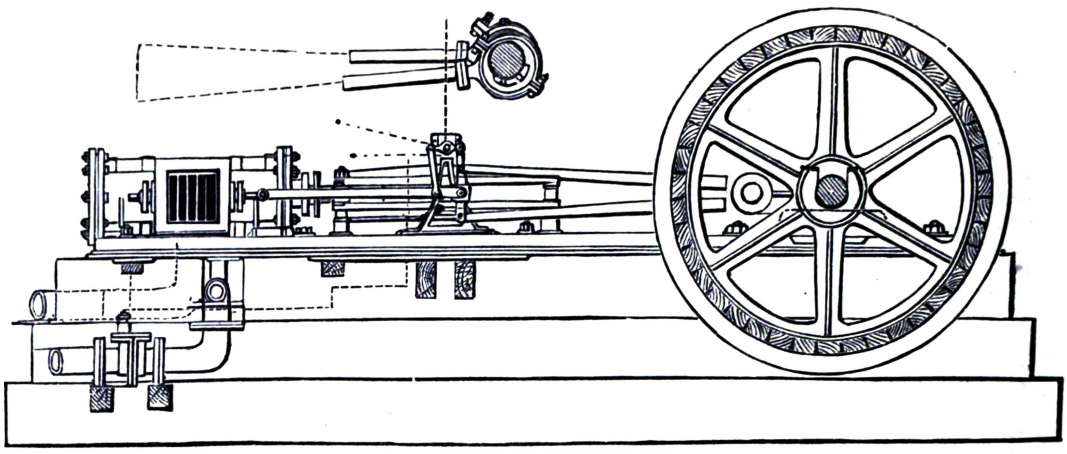

2717.

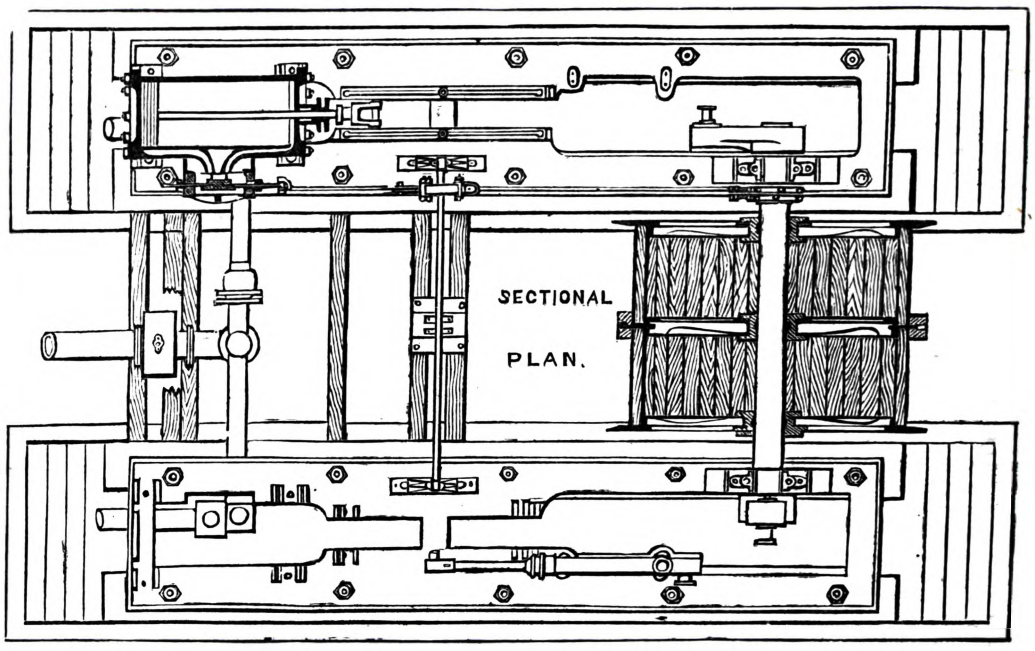

features of novelty, it affords a good example of modern winding engines of medium size. Coupled horizontal winding engines are now almost always employed, both for colliery and ore mines, in preference to beam, direct-acting vertical, or any other form of single engine.

In the present example the different parts seem to be massive and well proportioned, with strong heavy bed-plates. The cylinders are 20 in. diameter, and the pistons have a stroke of 4 ft.; the cranks in this instance are of cast iron, though the makers generally prefer and recommend wrought-iron ones. The main

2718.

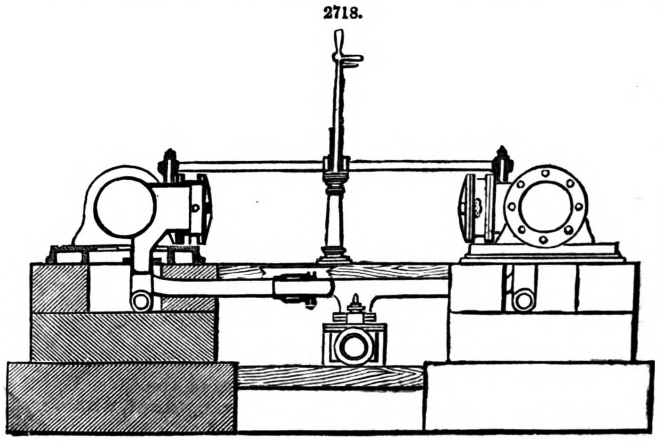

shaft is of wrought iron, 9½ in. diameter on the body, and 8 in. diameter in the journals. There is no fly-wheel attached, and the rope barrels, which are constructed for round ropes, are placed upon the engine-shaft, and are 8 ft. diameter. They are divided in the centre by a series of wooden cribs of elm which form a brake-sheave, which is operated upon by a wrought-iron strap not shown in the figures, but the action of the whole will be easily understood. See BRAKE.

The valves are ordinary slides, and are worked by means of two *eccentrics* to each, and the ingenious straight link-motion invented by Alexander Allan, p. 1199. The application of this link and winding engines is particularly valuable, especially where the valve is unbalanced, as reversing is effected with great facility. In some larger examples these makers balance the slide-valves by means of the thin flexible plates connected with them by links.

Chaplin's Hoisting Engine, on cast-iron sole-plate, Figs. 2719 to 2721, for use on shore or on ship-board. Manufactured by Wimshurst and Co., London.

A, boiler; B, engine-pillar; C, cylinder; D, fly-wheel; E, winding shaft or barrel; F, *winch ends;* G, *brake;* H, brake foot-lever; J, sole-plate or carriage; K, disengaging *clutch;* L, clutch lever and rod; M, reversing lever to link-motion; N, feed-pump.

2719

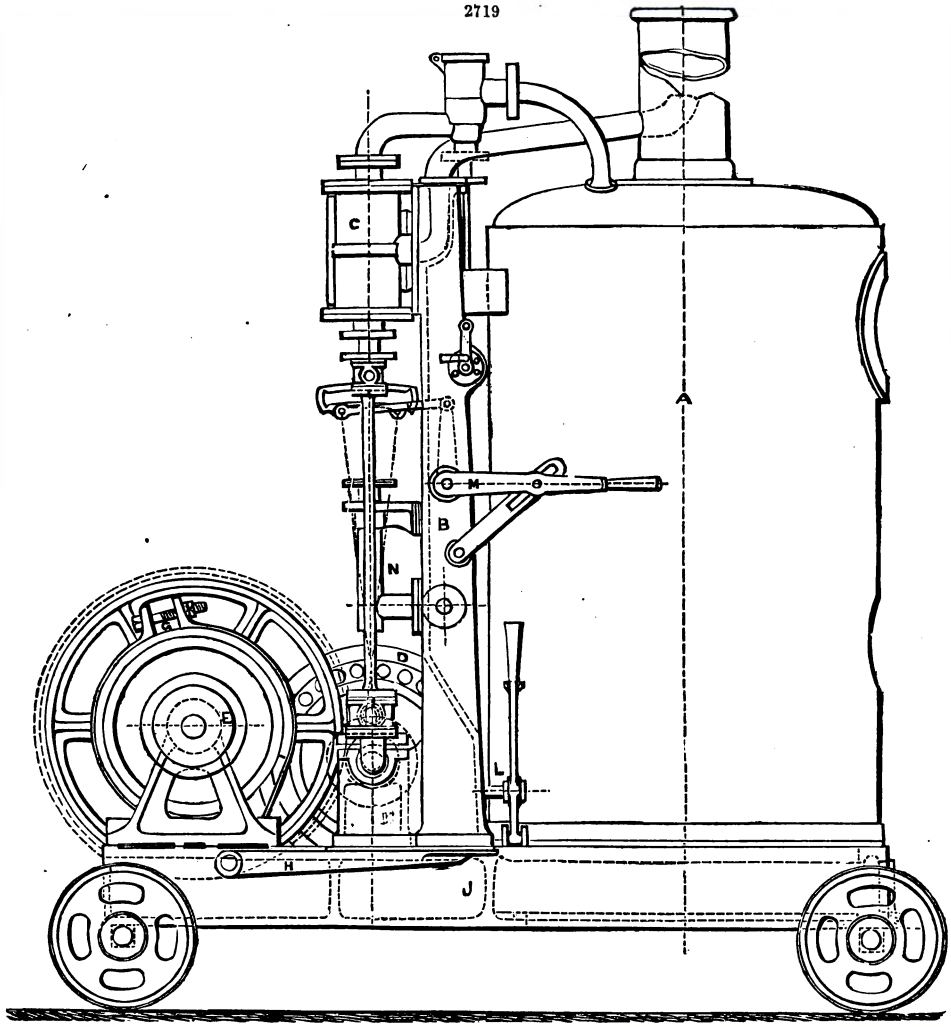

N. P. Burgh's Single or Double Acting Steam-Pump.—The mechanical arrangement of the valves of this pump, in relation to the piston or plunger, is in harmony with a well-known principle of hydraulics, namely, when any volume of water and air intermingled becomes compressed, the air, being the lighter, ascends, and the efficiency of pumps therefore consists chiefly in the discharge of the air before the water.

By this invention Burgh proposes to arrange and obviate the difficulties heretofore met with, in the following manner;—The valves for the purposes of admitting and permitting the supply and discharge into and from the pump can be arranged either horizontally, vertically, or otherwise, to suit the particular purpose for which they may be intended.

He proposes to place each valve side by side, above and below, or at each end of the barrel of the pump. The supply-valve on the top opens towards the barrel, and that at the bottom in the opposite direction, so that they work towards each other. The discharge-valves are situated at or

near the same angle or level as the supply valve or valves, but work in opposite directions or from each other.

This invention presents a more compact arrangement of the valves than those previously used for the same purpose, inasmuch that the air admitted with the water into the pump is nearly, if not entirely, discharged at each stroke of the plunger or piston, so that the next following stroke of the piston or plunger is equal to that preceding it, by which means any accumulation of air in the pump is prevented, and the efficiency of the upper and lower portions of the pump is rendered equally effective by the positions of the valves. To further ensure that the air below the piston, in the case when the pump is vertical, shall be as completely discharged as the air at the top, the piston is grooved in its periphery in one or more places sufficiently to allow the air when the piston is descending to escape to the upper portion of the pump, and on the up-stroke of the piston this air and the water will be effectually discharged. The piston may be solid or fitted with rings, valves, or otherwise, to suit the circumstances.

In this arrangement when the pump-valves are of metal or other suitable material, the top supply-valve and the lower discharge-valve being inverted in the case of vertical pumps, it is proposed to fit them with springs, of any kind of material suitable to the particular requirement, above or below the valves to retain them

2720.

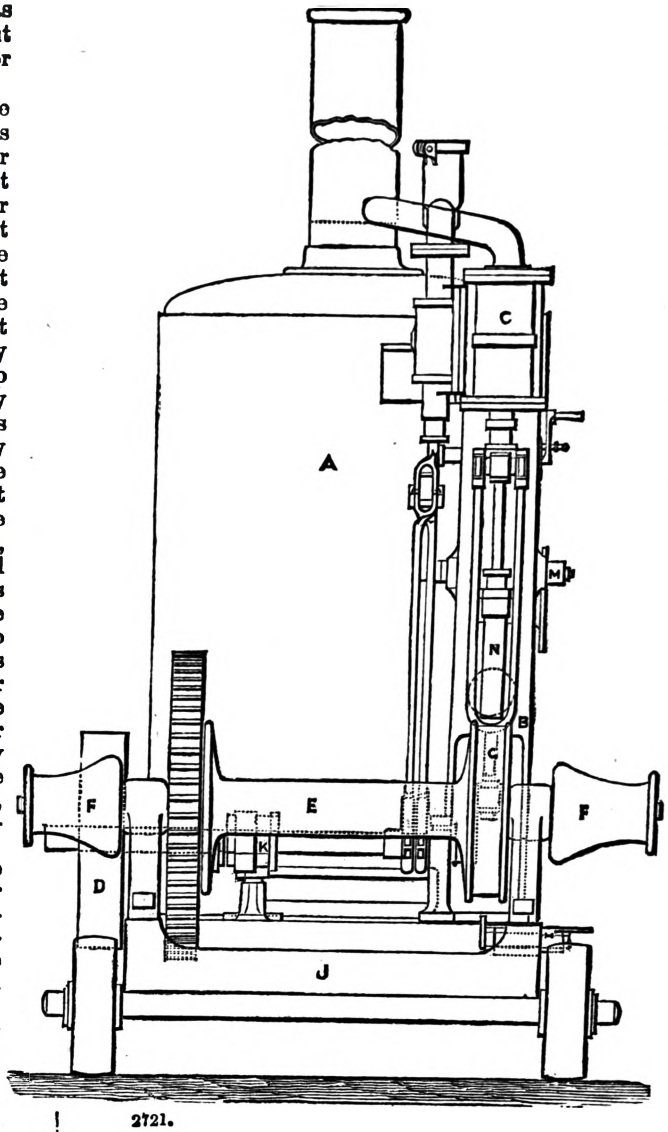

2721.

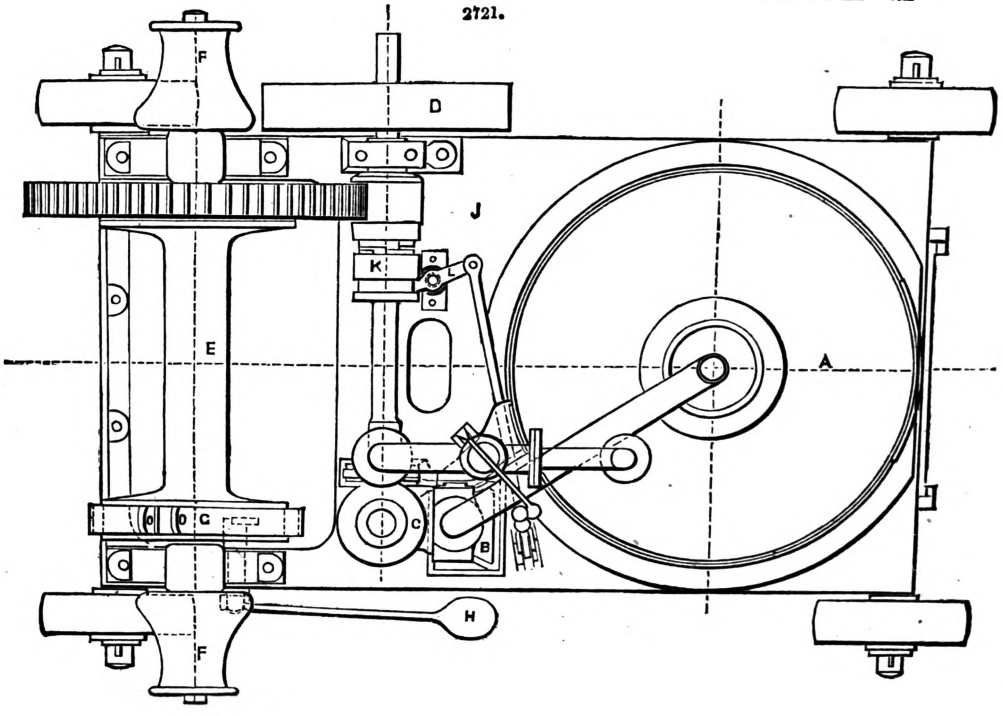

in an equilibrium position, so as to enable them to close at the proper time. If necessary, india-rubber, canvas, or other flexible valves may be used for the specific purpose just described with the requisite seatings, and guards or valves of any shape, form, or material, as a combination is also applicable if deemed necessary.

This arrangement possesses the advantage that a single-acting pump can be made to perform perfect duty on account of the discharge-valve being in such a position that the air admitted by the supply-valve is perfectly discharged with the fluid.

2722.

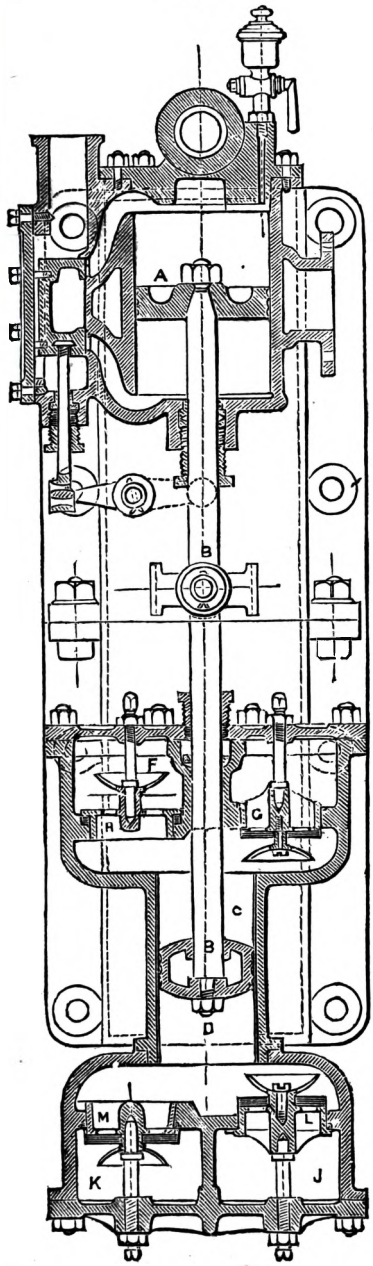

2723.

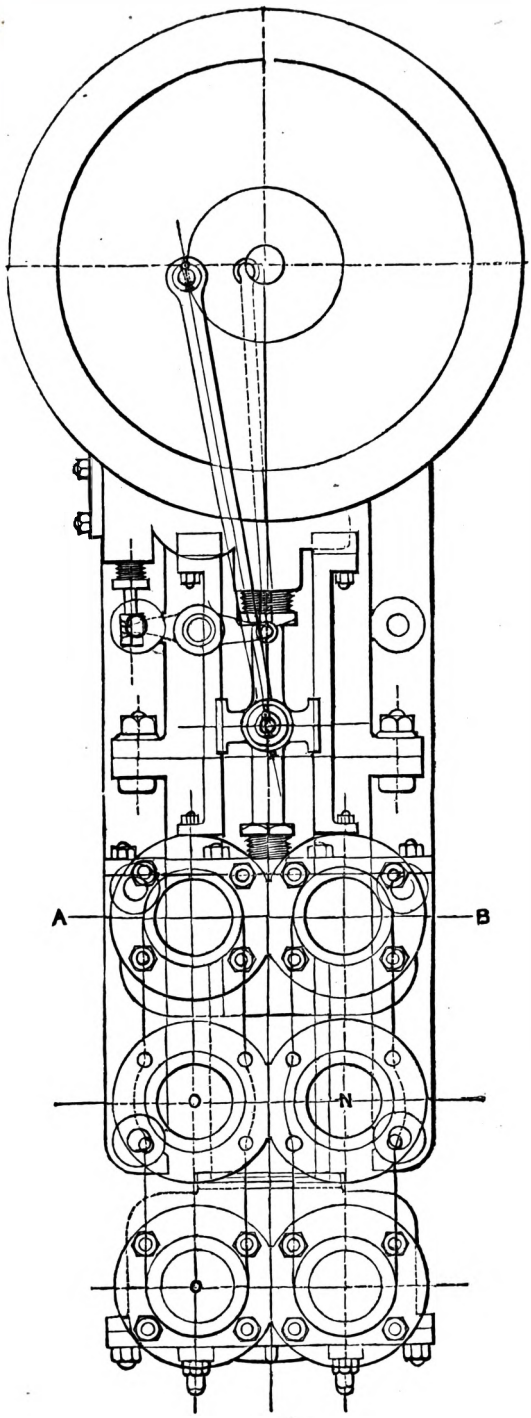

For air-pumps this arrangement is also particularly applicable, because the entire contents is discharged at each stroke of the piston or plunger.

Fig. 2722 is a sectional elevation of this machine as applied to a double-acting pump, and Fig. 2723 a front elevation; Fig. 2724 is a side elevation of Fig. 2722; Fig. 2725 is a sectional

view in plan taken on the line A B, Fig. 2723; Fig 2726 is an elevation in plan of Fig. 2723; and Fig. 2727 a sectional plan of Fig. 2724.

In each of the figures the same letters refer to corresponding or similar parts;—A is the steam-piston connected to the rod B of the pump-piston C working within the barrel D. On the upper

2724.

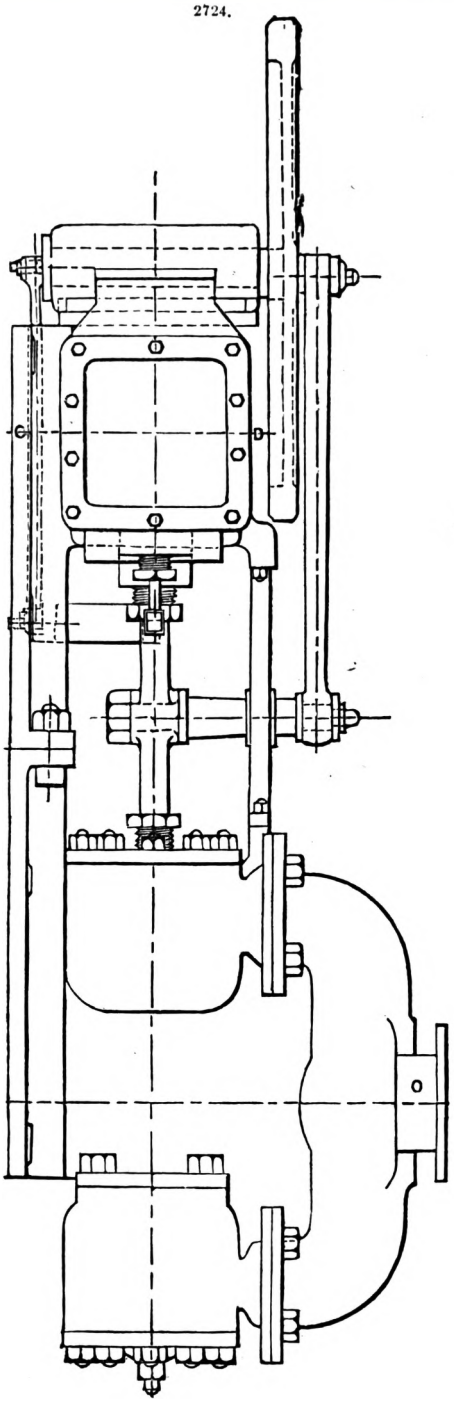

2725.

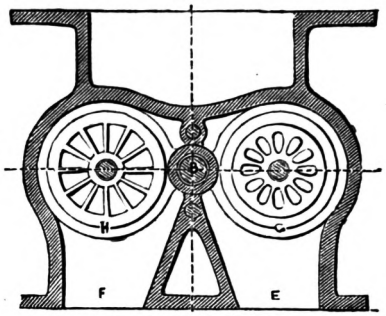

2726.

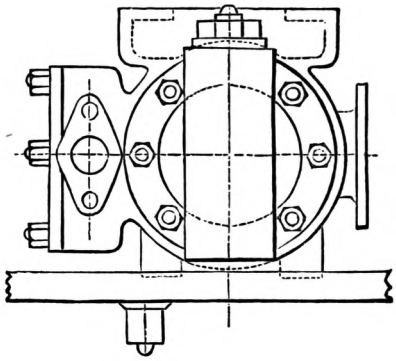

2727.

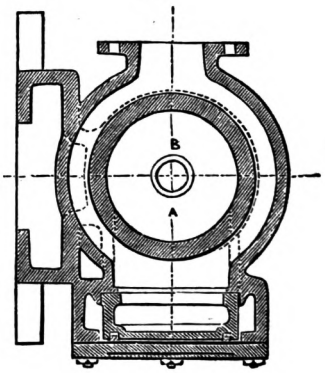

portion of the barrel two separate chambers E and F are cast therewith, forming the suction and discharge chambers E and F, in the bottom portions of which are secured in a suitable manner the seatings and valves G and H for suction and discharge. At the lower end of the barrel D there is bolted a casing containing two chambers J and K, in the bottom of which are secured similar valves, L and M, as those above referred to, G and H. The four chambers, just named, have branch

pieces cast with flanges, the two suction and two discharge chambers are joined together by means of two branch or coupling pipes N and O, and thus forming a single suction-opening and a single discharge-opening for the working connections.

It will be seen on referring to Fig. 2722 that on the piston C moving in either direction, that is, up and down or right and left, the valves G and L open and admit water into the barrel on each side of the piston C, or at each end of the barrel, and at the same time the valves H and M permit of the discharge therefrom, by which means a continuous and effective supply and discharge are produced.

The main feature is that should any air be admitted into the barrel, by this arrangement of the valves it is drawn out by the piston C at each stroke, and thus a continuous uniform action of the valves, and the special duty of the piston C, are fully carried out.

Merryweather's Steam Fire-Engine, Figs. 2728 to 2732.—This engine weighs but 20 cwt.; it is mounted on high wheels and easy springs so that its draught is light, and it is capable of delivering 200 gallons a minute, and of throwing a $\frac{7}{8}$-in. jet 150 ft. high, or two $\frac{5}{8}$-in. streams. In its chief parts the engine is of similar construction to the larger engines manufactured by the same well-known makers of steam fire-engines. The *boiler*, which is shown in vertical section, Fig. 2729, is constructed according to Field's arrangement, and is of a kind well adapted for use on a steam fire-engine. The sides of the fire-box it will be noticed are formed entirely of Field's tubes clustered together. The boiler possesses the advantage that if the water is allowed to get low the only parts damaged are the tubes, and these all can be taken out and replaced in fourteen hours. A single tube if damaged can be taken out and replaced in half an hour, or the hole can be plugged if preferred. In the boiler, Fig. 2729, the tube and top plates and uptake are of iron, while the shell is of mild steel and double riveted. The tubes are of solid drawn homogeneous metal, and the boiler is tested up to a pressure of 300 lbs. a square inch

A strong frame of angle-iron, well stayed, is attached to the boiler by strong independent wrought-iron horn pieces, and on this frame, over the fore and hind carriages, are fixed the steam and pump cylinders, so that no working parts are attached to the boiler. The piston-rod is in one piece, the steam-piston being attached at one end and the pump-piston at the other end. In the centre of the piston-rod is keyed a light cross-head carrying a brass clip, which, as it moves to and fro, glides along a slightly twisted bar, giving it a rocking motion which imparts a reciprocating movement to a finger-lever, and this lever actuates a single slide-valve of equilibrium-piston form. This valve is so arranged that a fixed action places it in such a position as to close the steam-inlet and exhaust-ports when the main piston is at the end of its stroke, and when this is done the stroke of the piston-valve is completed by steam so as to open the reverse steam and exhaust ports. This valve-motion is found to be very certain in its action, and works with great regularity, so that the stroke of the piston is practically always the same length; while, more-

2728.

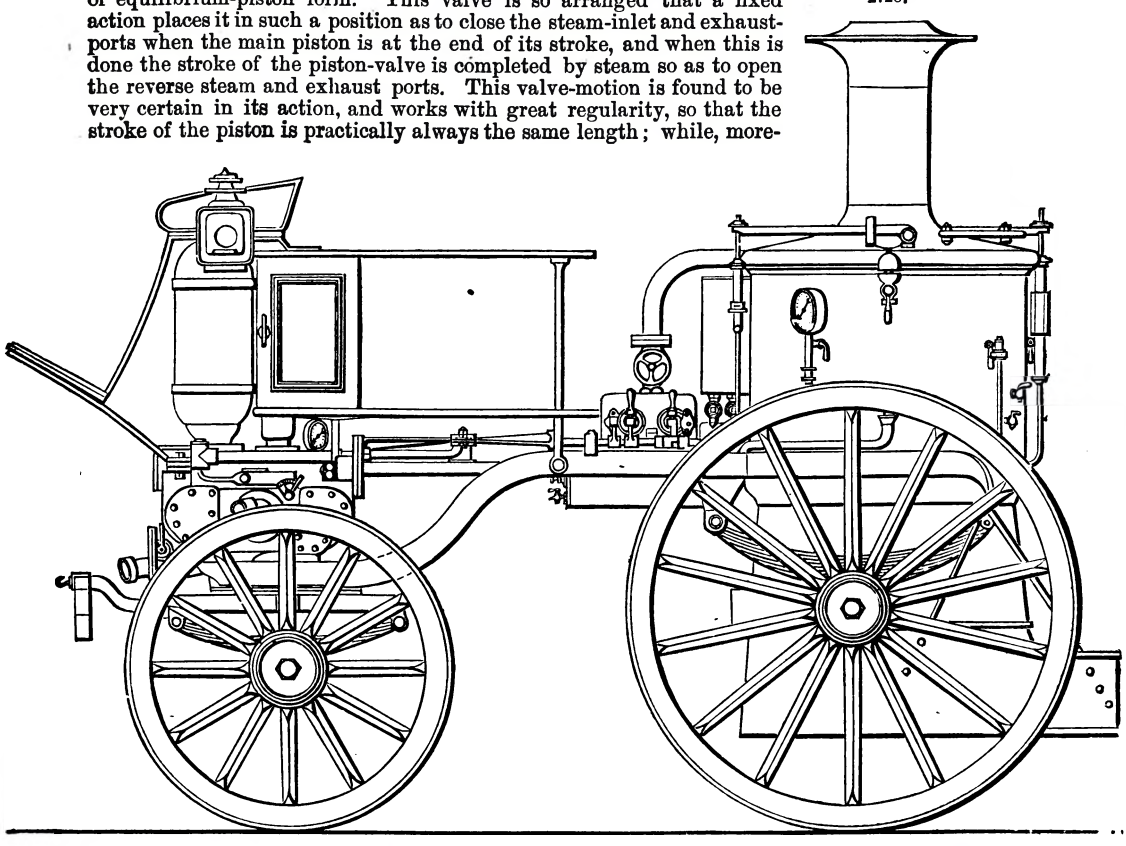

over, the engine is so much under control that it can be run at only one stroke a minute, or at any intermediate speed up to one hundred and sixty or more double strokes per minute.

The pump-cylinder, Figs. 2730, 2731, is cast with its valve-chamber entirely of gun-metal, and is fitted with india-rubber valves. These valves have very large clear openings without gratings,

and with but moderate lift, and are so arranged that immediately the engine has been stopped all water leaves the pump, thus preventing accidents from freezing. These engines possess an advantage, the importance of which is very great, and that is the almost absolute freedom of the pumps from liability to become choked or set fast with sandy water, a defect which, when it exists, not only gives rise to permanent injury to the pumps, but also causes, after a few hours' working, a loss of power of from 35 to 50 per cent. in the useful effect, a loss which continues until the pumps have been taken to pieces and cleaned.

2729.

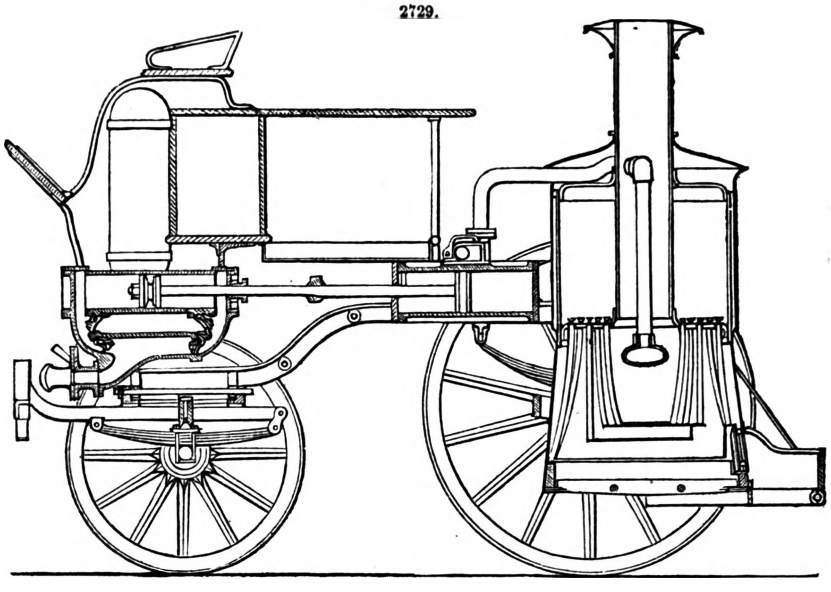

2730.

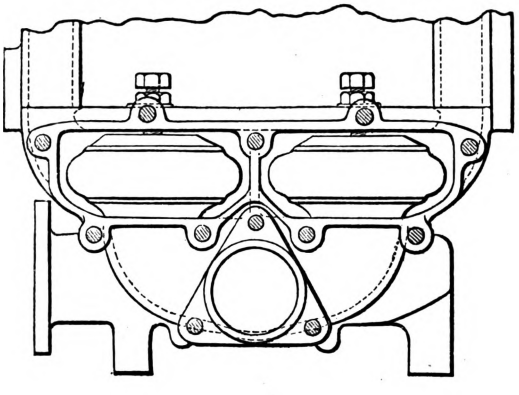

2731.

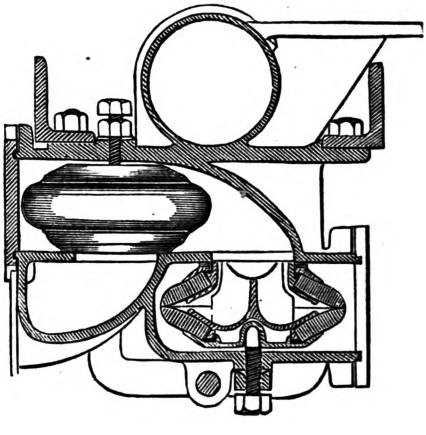

At the side of the main pump is the feed-pump taking its supply of water from the delivery passage of the main pump, and regulated by a cock with a graduated index plate. When the water pumped by the main pump is salt or foul, as it is in some cases, fresh water is supplied to the boiler by opening another suction-cock to the same feed-pump, there being attached to this cock a short suction-hose which is placed in a pail or tub of fresh water as with a portable engine. The feed-pump has a brass-cased ram attached to the main cross-head, and it can be used for feeding the boiler without passing water through the main pump; while, moreover, in case the boiler be carelessly allowed to get short of water, the main pump by working the engine slowly can discharge all its water direct into the boiler.

The main pump is fitted with copper suction and delivery air-vessels, and a pressure-gauge and two delivery-outlets, each with stop-valves screwed to receive the couplings of delivery-hoses. The engine has a driver's seat, seats and room for twelve firemen, and foot-plate behind the boiler on which the stoker rides and attends to the fire whilst *en route*, as the fire-door is at the hind end between the two coal-bunkers. These latter carry more than an hour's supply of coal, and there are brackets provided for 30 ft. of suction-hose, bunker for 280 ft. of leather delivery-hose, and a tool-box for branch pipes, nozzles, and other small things that may be required. A pole and swing-bars are also provided so that two horses may be attached when required. These engines are not only effective when water is close, but they have the power to pump water through delivery-hose 1500 or 2000 ft. long, and yet to deliver a good jet of water at the end. The steam-cylinder is 5½ in.

diameter, and the double-acting pump 4½ in. in diameter, the stroke of both steam and water pistons being 12 in.

Altogether we consider that the engine just described is well planned, and that the details are well carried out.

Fig. 2732 represents one of Merryweather's steam fire-engines which can be used afloat to extinguish fires on shipboard.

Shand, Mason, and Co.'s Equilibrium Steam Fire-Engine.—The boiler and pumps of this engine are conveniently placed, close to the hind axle; the front part of the carriage being reserved for the firemen, with their hose and various implements, the whole being mounted on four high wheels, and well poised on springs.

2732.

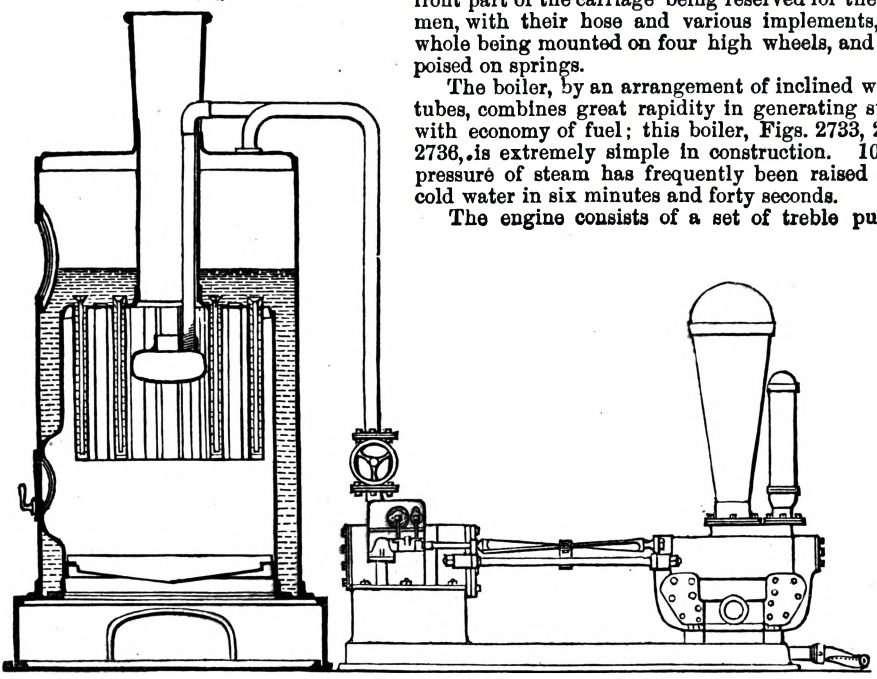

The boiler, by an arrangement of inclined water-tubes, combines great rapidity in generating steam with economy of fuel; this boiler, Figs. 2733, 2735, 2736, is extremely simple in construction. 100-lb. pressure of steam has frequently been raised from cold water in six minutes and forty seconds.

The engine consists of a set of treble pumps, which are worked direct by a corresponding set of treble steam-cylinders, the whole being fixed to the boiler.

Fig. 2733 is a longitudinal section.

Fig. 2734 is an end elevation.

Fig. 2735 is an elevation of the tube-chamber, showing the arrangement of the tubes.

Fig. 2736 is a plan of the tube-chamber for the same purpose.

A are steam-cylinders; A_1, fire-box; A_2, fire-bars; A_3, combustion-chamber; A_4, chimney; A_5, steam-chest; B, plungers; C, connecting-rod; C_1, safety-valves; C_2, exhaust-pipes; C_3, steam-pipe; C_4, steam-regulating valve; D, engine-frame; D_1, feed-cistern; D_2, hose-box; D_3, driver's seat; D_4, driver's footboard; D_5, boot to carry hose, and support locking; D_6, lockings; E_1, front wheels; E_2, rods by which hind footboard is suspended; E_3, hind springs; F, connecting-rods; G, stuffing-box of plunger; H, cranks; H_1, tubes in boiler; I, crank-shaft; J, eccentrics; J_1, feed-pump; K, bucket; L, foot-valve; L_1, foot-valve joint; M, suction-nozzle; N, suction-chamber; O, pump-barrels; P, pump-head; Q, delivery-nozzles; Q_1, delivery-valve handle; R, hind axle; S, fire-door in boiler; T, hind footboard; U, hind wheels; V, air-vessel; W *w*, front-spring shackles; *x*, front axle; Y, front springs; Z *z*, hind-spring shackles.

There are three steam-cylinders and three pumps direct acting, on the bucket-and-plunger type, the plunger being half the area of the buckets. The buckets are bolted to the plungers, and are shown at K, in Fig. 2733. The foot-valve is shown at L in the same figure. Access is obtained to the valves by unscrewing the bolts L, and dropping the suction-chamber N, with the foot-valves, bodily down, then the bucket can be disconnected from the plunger and dropped down in the same manner. The foot-valve is made fast by sweating to its seating.

The suction-hose is screwed to the nozzle M, and the delivery-hose to the nozzles Q Q.

When all is placed ready for starting, the engine, by lifting the bucket, fills the pump-barrel O, and on the return stroke (down) the water is transferred through the bucket K into the upper side of the pump-barrel; but at the same time half of the quantity is discharged by the plunger, and the other half remains to be discharged by the next up-stroke by the bucket. An air-vessel V, Fig. 2734, is in communication with the pump-head.

The boiler is of the water-tube class, having the tubes arranged in separate layers, and each layer at right angles to the one immediately above or below it; they are also inclined, to ensure a circulation of the water, which goes on in the direction shown by the arrows, Figs. 2733, 2736.

When it becomes necessary to examine the boiler, it can be readily done by unscrewing the bolts at B_1 and B_2, Fig. 2733, and lifting the shell entirely off; then every one of the tubes are exposed.

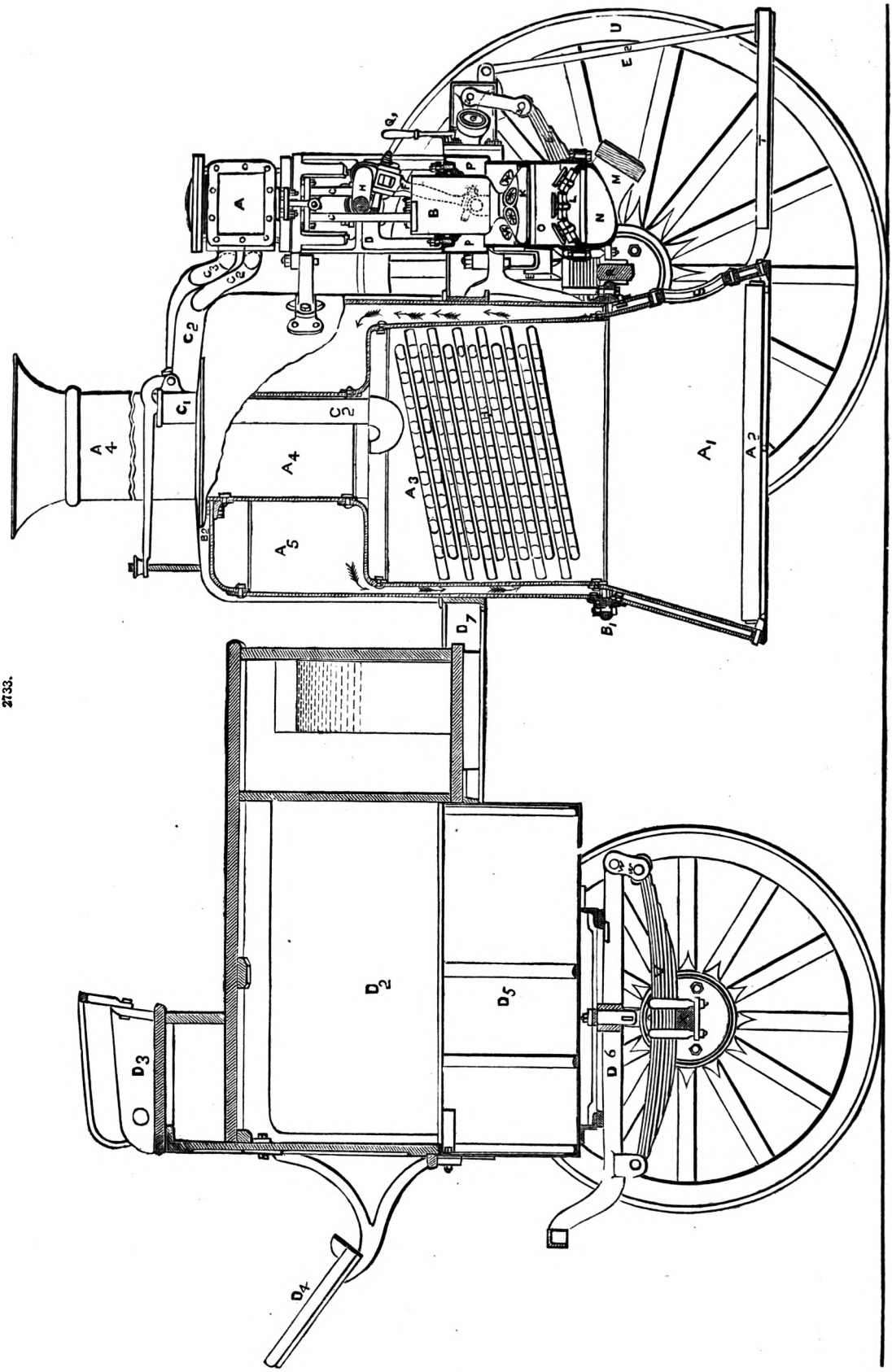

2133.

The springs are provided with shackles W, Fig. 2733, on their hind ends, to give play without injury to the machine.

2734.

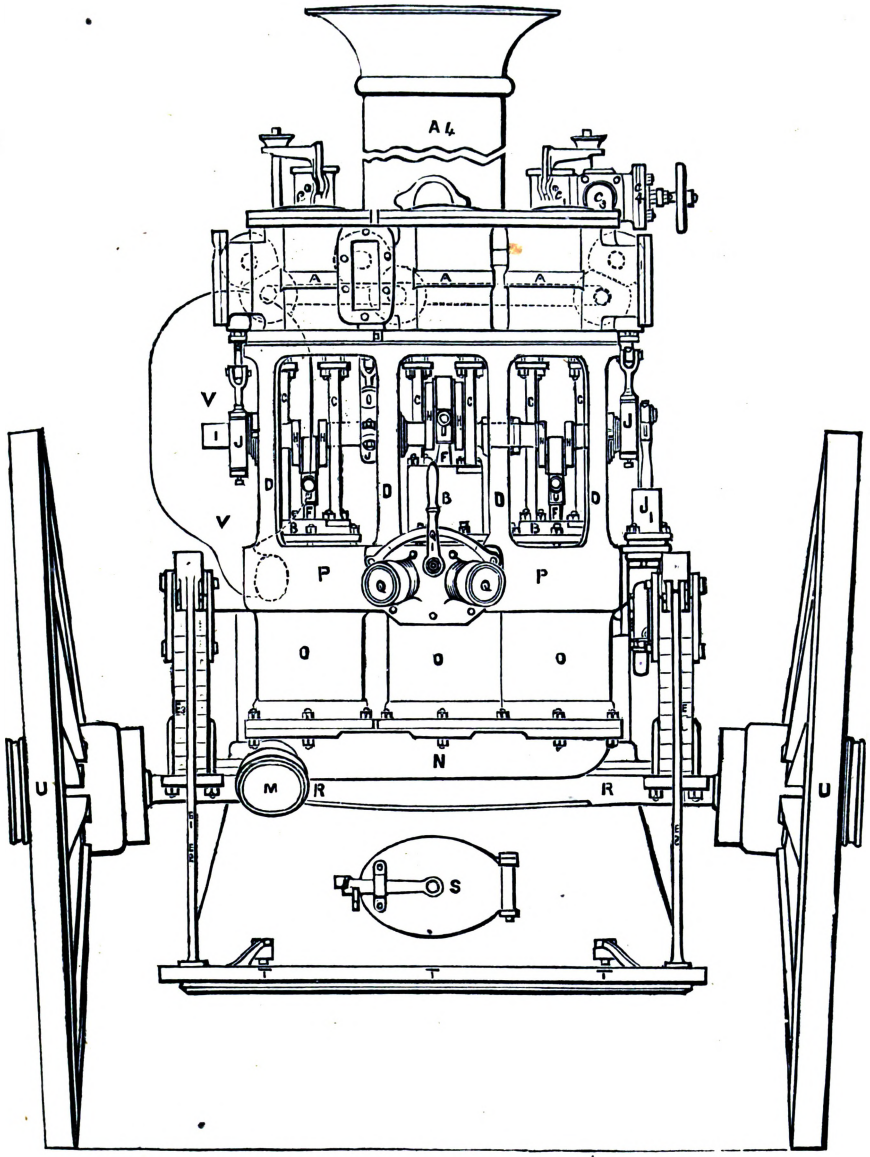

2735.

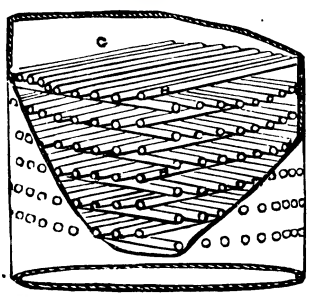

2736.

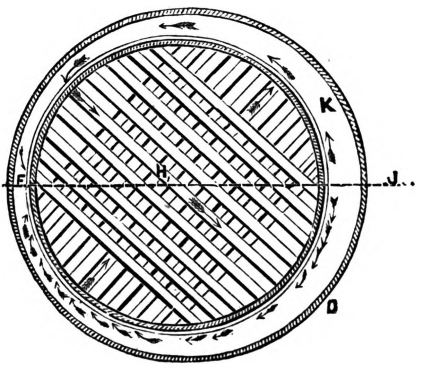

Steam Road-Roller of Aveling and Porter, of Rochester.—This machine, Figs. 2737, 2738, weighs 15 tons, and is mounted on four broad wheels or rollers, the front pair, which are 5 ft. in diameter, acting as the driving wheels; these rollers are so placed that the total width rolled is 6 ft. The hind pair of rollers, which are 4 ft. 9 in. in diameter, are placed close together, so as to form, as it

2737.

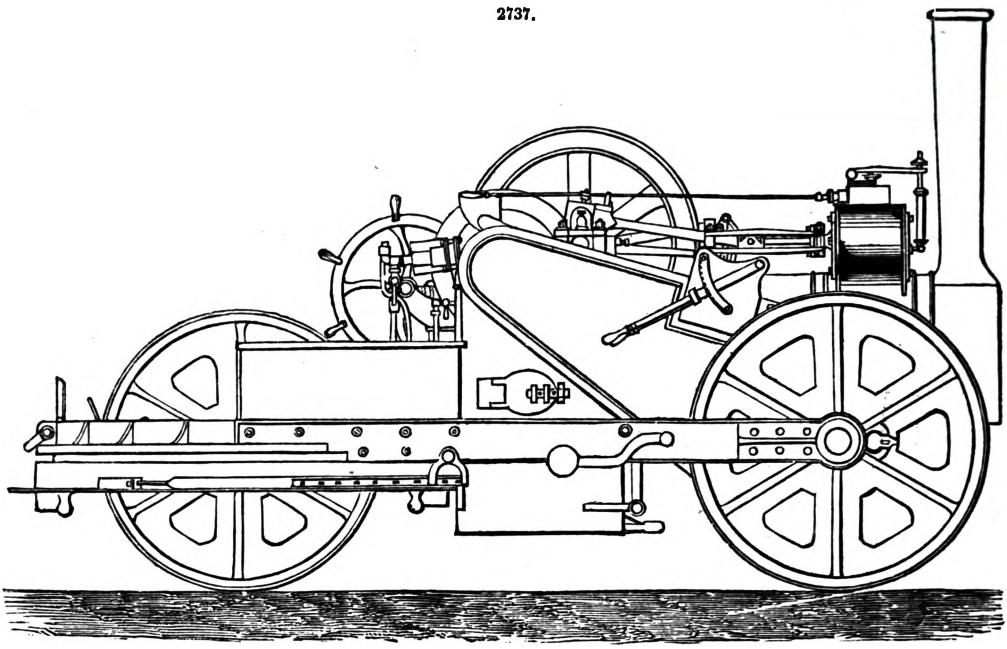

were, one broad roller, and they are of such width that they slightly overlap the tracks of the front rollers, as shown in the back elevation, Fig. 2738. The hind rollers are mounted within a ring acted upon by the steering gear, the hand wheel of which is situated on one side of the engine. The mounting of the hind rollers is, moreover, so arranged that the machine can, as it were, rock on them to some slight extent, and the front wheels are thus left free to adjust themselves to the curvature or inequalities of the road. The machine is practically supported on three points, the most stable arrangement that can be employed.

2738.

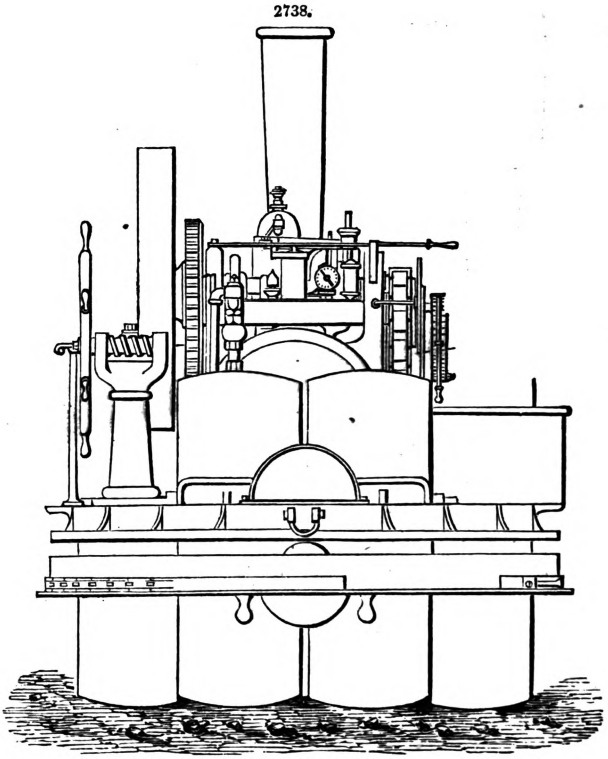

The general arrangement of the steam-cylinder and gearing is the same as that ordinarily employed by Aveling and Porter on their well-known traction engines, and all parts are readily accessible and completely open to inspection. The fire-box is provided with a side door, the firing being performed by the driver, who stands on one side of the engine, while the steersman stands on the other. The fuel and water are carried upon the strong framing, which connects the hind rollers with the fore part of the machine, and the weight is arranged so that it is equally distributed on the two pairs of rollers, while the centre of gravity is kept as low as possible.

At Manchester a road-roller, similar to that we are now describing, rolled down a surface of 2225 sq. yds. of newly-metalled road in ten hours with a consumption of 6 cwt. of coke; while

on another occasion 600 sq. yds. of similar road were rolled down smooth in 2½ hours, the consumption of coke being three bushels.

Besides road-rolling, the machine can, by merely placing spikes in holes provided in the wheels to receive them, be also employed for breaking up the roads. The machine at Manchester was tested with this class of work, and picked up an area of 2048 sq. yds. in three hours forty minutes, with a consumption of 160 lbs. of coke. The cross-picking was subsequently performed by hand-labour, the amount of this hand-labour being only equal to that of one man working sixty hours. See AGRICULTURAL ENGINES. AGRICULTURAL IMPLEMENTS. AIR-ENGINE. BLOWING MACHINE. BORING AND BLASTING, p. 515. BRIDGE, p. 793. CAM, p. 904. COAL-CUTTING MACHINE. COPPER, p. 1070. DREDGING MACHINE. DRILL.

ENVELOPE MACHINE. FR., *Machine à plier les enveloppes;* GER., *Couvertfaltmaschine;* ITAL., *Macchina da copertine;* SPAN., *Máquina para hacer sobres.*

Self-feeding Envelope-folding Machine.—The credit of inventing this machine is due to G. H. Reay, of New York.

To thoroughly appreciate the advantages these machines present, our readers must bear in mind that other machines require three attendants to perform the operations carried out by these, which require one attendant only. There is the attendant to feed with one blank at a time; and as ordinary machines deliver the envelopes simply creased, another attendant must place the flaps of the envelopes in proper order and gather them up, whilst a third attendant is required to band them. In the machine we are about to describe, the attendant sits down in front and places in the proper receptacle a certain number of blanks, regulated according to their substance; the apparatus picks up the blanks singly and conveys them to the creasing-box, and, during their progress, they are stamped, if so required. After having been creased, the envelopes are, by a double action of the plungers, most securely and correctly fastened and folded. After leaving the plungers, they are mechanically collected and delivered to the attendant in symmetrical order ready to be banded. Thus, from the time the blanks are delivered to the machine till the perfect envelope is turned out, the attendant has nothing to do with them, which leaves ample time to band them up.

2739.

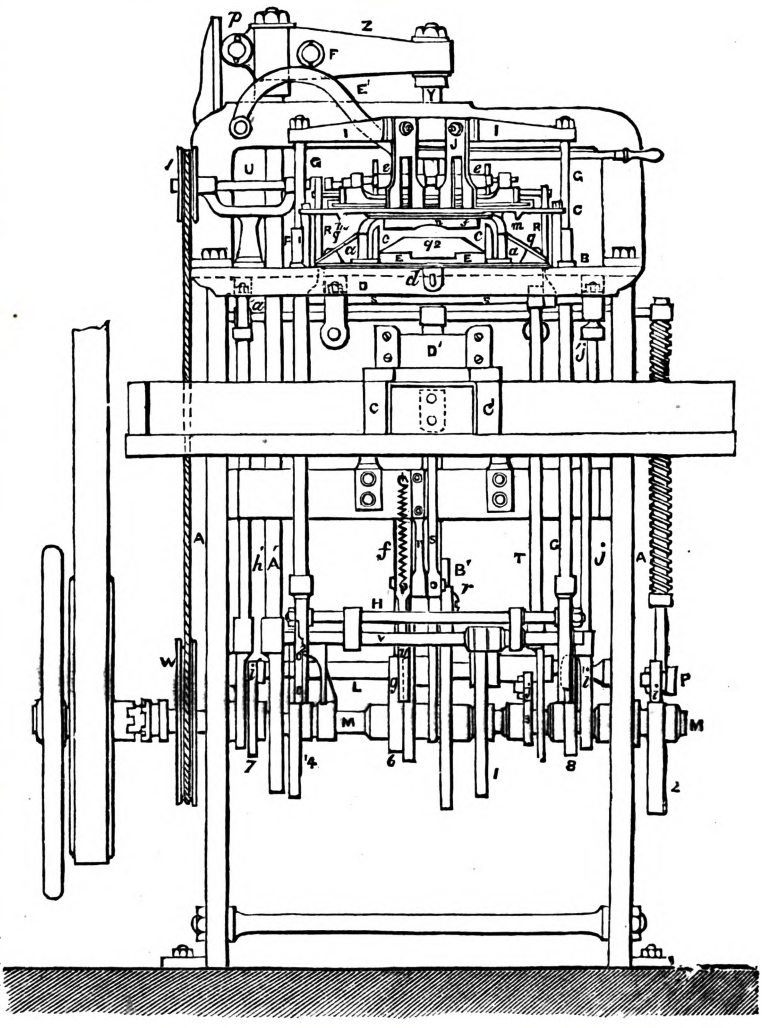

This machine is represented in front elevation at Fig. 2739. Fig. 2740 shows the apparatus in side elevation. Fig. 2741 is a plan, with the upper framing removed, to show more clearly the apparatus for feeding and pressing. A is the main frame of the machine; it carries near its upper part a table B, above which is a plate C supported by columns or pillars D on the table B. The plate C is perforated for the passage of the lifters. The table B also carries near the front end another plate E, free to be moved in and out as required. This plate and a portion of the table B are shown on a larger scale in isometrical view in Fig. 2742, and inside view in Fig. 2746. The envelope blanks are placed on the plate E when drawn out, as shown in Figs. 2740, 2741, and 2746, and are kept in place by projections *a a* on the plate. The projections are fitted at top with bent springs *b b* for a purpose to which we shall presently refer. When the plate E has been sup-

plied with a number of blanks, it is pushed in, as shown in Fig. 2742, until the blanks come against projections *c c* on the table B, when they are in position for being fed singly into the machine. The plate is then secured by means of a thumb-screw *d*.

The table B carries guides F for vertical rods G G which pass through it. These rods are forked at bottom to embrace a horizontal rod H, while at top they are connected by a cross-beam I from which lifters J J depend. These lifters perform the double purpose of gumming the envelope blanks and of lifting them one by one from the supply-plate E. The lifters are forked at bottom, and the forked ends are supplied with gum from the rollers *e e*, which have a to-and-fro motion imparted to them. Immediately after being gummed, the lifters J J fall, come in contact with and take up the uppermost blank, which adheres to their gummed surface. The lifters J J receive up-and-down motion from a rocking lever K centred on a shaft L at back of the machine, and acted

2740.

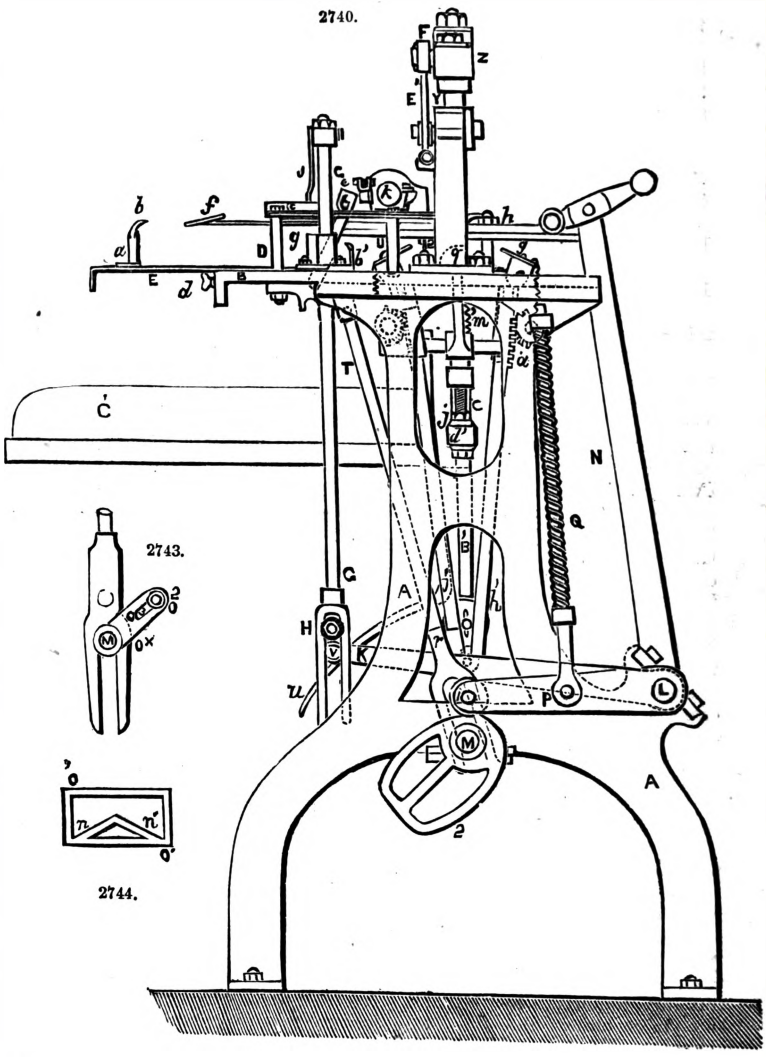

2743.

2744.

2741.

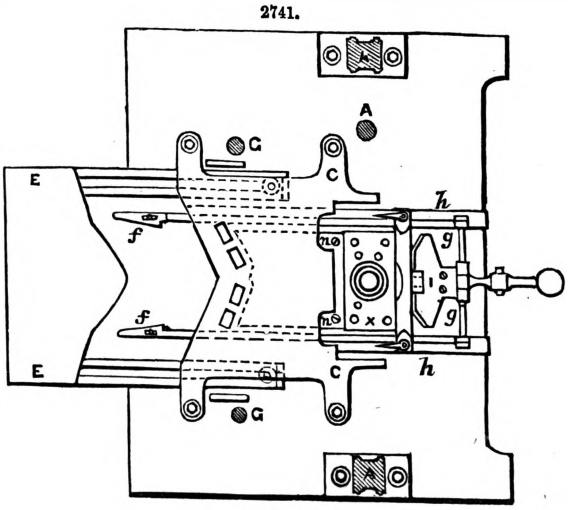

2742.

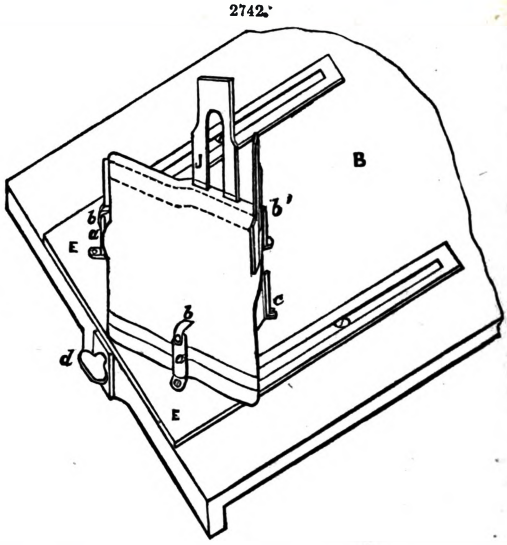

upon by a cam 1 on the main driving shaft M. This cam is double, that is, it is formed so as to produce a double action; it first raises the lifters J J a certain height (after their forked

ends have been gummed and have taken up a blank), in order that the blank may be released by coming in contact with the under-surface of the plate C. The bent springs *b b* on the projections *a a* of the supply-plate E at the same time bend down or curve the end flaps of the blank to ensure its being caught by fingers. The second portion of the cam 1 then acts to raise the lifters J J still higher, when the gumming rollers *e e* come under their forked ends to supply them with gum for another blank. In the meantime, the first blank has been seized by fingers *f f* on the ends of slide-rods *g g*, which are moved to and fro in a framing *h* fixed on the back part of the table B. This movement is effected by a weighted rod N, which connects a cross-bar O of the slide-rods *g g* to the back shaft L. The weight on the rod N prevents all jar and shock in this part of the machine. The shaft L receives motion from a lever P on its end, acted upon by a cam 2 on the main shaft M. The lever P is furnished with a spring rod Q to keep a roller *i* carried by the lever on the face of the cam. The fingers *f f* are undercut at the back, as seen in Fig. 2740, in order that in their backward motion the undercut portions may come against the blank and carry it to the creasing apparatus.

The gumming rollers *e e* receive their to-and-fro motion by means of levers R R connected to a cross-bar S under the table B; the cross-bar S in its turn receives motion from a nearly vertical rod T, the lower end of which is forked and furnished with a roller *j*, which rides upon and is acted on by a cam 3 on the main shaft M. The gumming rollers *e e* are fitted in a frame which moves to and fro in guides on the plate C; any gum which may fall from the rollers is caught upon this frame. The rollers are composed of printer's composition covered with india-rubber. They receive their supply of gum from another roller or doctor *k*, which rotates partly in a box *l* containing the gum. The doctor *k* is made to rotate by a projection on its axis being acted on by a pin on the shaft U carried by a framing on the table B. This shaft receives motion through a pulley V, over which a band passes to another pulley W on the main shaft M. The gum-box *l* is provided with a scraper or spreader to regulate the supply of gum.

The plate C has two ribs *m m* formed on its under-side, which, as the envelope blank is being carried back by the fingers *f f*, as before explained, keep the end flaps slightly curved downwards, in order that the blank may be presented in that position to the plunger. Beneath the plate C is an inclined plate *n* which supports the body of the blank while being carried to the creasing-box. Immediately the blank is brought over the creasing-box, a top plunger X comes down upon it and drives it into the creasing-box, whereby the four flaps are creased or brought into a vertical position; the plunger X then ascends. Up-and-down motion is imparted to this plunger through a vertical rod Y connected to a horizontal beam Z above the machine. The beam Z is again connected to another vertical rod A^1 forked at its lower end, and carrying a roller *o*, which rides on a cam 4 on the main shaft M, except after the plunger X in its down-stroke has reached the envelope blank. If the pressure of the plunger is not sufficient, greater pressure is caused to be exerted by another roller o^2 which rides over the roller *o* at every revolution of the main shaft. This additional roller o^2 is carried on a pin adjustable in a slot o^3 (see the detached view, Fig. 2743) in an arm or crank o^4 on the main shaft. The beam Z is guided in its motion by a roller which bears against a projection on the upper part of the main frame A.

When the top plunger X ascends, two fingers *q q* come down upon and fold the end flaps of the blank; then another finger q^1 comes down upon and folds the back flap, the inner surface of which has been gummed; a fourth finger q^2 then comes down upon and folds the front flap. Simultaneously with the coming down of the two end fingers *q q*, a bottom plunger X^1 is made to ascend to the bottom of the creasing-box to support the blank. Immediately after the folding of the flaps by the four fingers, the top plunger X again descends and carries another blank into the creasing-box. The fingers then retire by means of mechanism we shall presently describe just before the plunger X in its down-stroke would press upon them, and this plunger exerts pressure upon the edges, and still greater pressure upon the gummed portion (owing to the peculiar construction of the face of the plunger) of the envelope, the folding of which has just been completed. The finished envelope and the creased blank are now momentarily held between the two plungers X X^1.

It will thus be seen that each blank remains in the creasing-box during two descents of the top plunger X. The bottom plunger X^1 is made to rise and fall by means of a cam 5 on the main shaft M, against which a roller *r* on a forked vertical rod B^1, which carries the plunger X^1, bears. The finished envelope is caused to fall from the top of the plunger X^1 by means of two projections, which in the down-stroke of this plunger pass through slots, and tilt the back of the envelope, which falls edgewise down a shoot D^1 into a box C^1. The back of this box is free to slide in and out, and is connected to a lever *s*, centred on a support *t* fixed to the main frame A; the pin which connects the lever *s* to the support *t*, also connects to the same support a curved lever *u*. A bar *v*, which supports the vertical rods G G, presses in its downward motion upon the curved portion of the lever *u*, and through the lever *s* causes the back of the box C^1 to carry forward into the box the envelope last delivered from the creasing-box. The box C^1 extends to the front of the machine, and forms a table, which may be used by the attendant while banding the envelopes into packets as they are taken out of the box.

The two fingers *q q*, for folding the end flaps of the envelope, as before explained, are arranged as shown in Fig. 2745, and act as follows;—They each consist of a plate with bevelled edges secured at back to a block *x*, and are furnished with adjusting screws. Each block *x* works upon a pivot *y* in an arm *z*, carrying a boss a^1 formed with teeth on a portion of its periphery; the teeth on each boss are geared into by a rack or toothed boss on the upper part of a vertical rod c^1. The two vertical rods c^1 are connected by a horizontal bar d^1 caused to rise and fall by another vertical rod f^1, the lower end of which is forked and furnished with a roller g^1 which rides over a cam 6 on the main shaft. In the down-stroke of the forked vertical rod f^1 the racks on the rods c^1, by gearing into the toothed bosses a^1, cause the fingers *q q* to turn upon their pivots *y*, and take up a position over the creasing-box and under the top plunger, and so fold the flaps. In the up-stroke

of the rod f^1 the fingers q q are caused to retire, and as soon as they are free from the plunger X a spring m^1, connected to the back of each finger-block x, draws down the back of the block, and thereby raises the fore end of the finger.

2745.

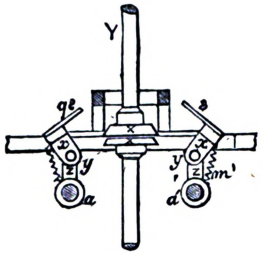

2746.

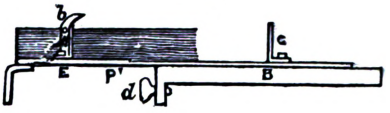

The fingers q^1 q^2 for folding the back and front flaps of the envelope are arranged and act similarly to the fingers q q, for folding the end flaps, as just explained. The finger q^1 is acted on by a nearly vertical rod h^1 toothed at its upper part and forked at bottom, where it carries a roller s^1, which rides over a cam 7 on the main shaft. The finger q^2 is similarly acted on by a rod j^1, roller l^1, and cam 8. In order that the top plunger X, the second time it acts on each blank, may, after the fingers retire, exert greater pressure on the gummed portion of the envelope, ribs or projections n^1 are formed on the face of the plunger, as shown in Fig. 2744, which is a view of the face of the plunger, to correspond with the gummed portion, in addition to the ordinary rib or projection o^1 on the edges of the face of the plunger. As there are three thicknesses of paper at the gummed portion of the envelope, this portion consequently receives the greatest pressure. The plunger X is perforated for the escape of air. To prevent the envelope blanks adhering to each other, a portion of the supply-plate is removed, as seen at p^1, Fig. 2746, so that the lifters J J, in coming down upon the blanks, may press down and separate their edges.

The forked vertical rods referred to as being fitted with a roller riding on a cam on the main shaft are each furnished with a spring to keep the roller down upon the face of its cam. To raise the top plunger X and its beam Z when necessary for cleaning or repairing the machine, a curved lever E is fitted on the main frame A. By turning the lever on its pivot it comes against a roller F^1 on the beam Z, and raises the beam until the roller falls into a slot formed for the purpose in the lever E^1. See PIN-MAKING MACHINE.

EPICYCLOIDAL WHEEL. FR., *Roue épicycloïdal*; GER., *Epicykloidenrad*; ITAL. *Ruota epicicloidale*; SPAN., *Rueda da epicicloide.*

See MECHANICAL MOVEMENTS.

ESCAPEMENT. FR., *Échappement*; GER., *Hemmung*; ITAL., *Scappamento*; SPAN., *Escape.*

Escapements are contrivances for converting a reciprocating circular motion into a discontinuous circular motion in one direction.

Fig. 2747 represents an arrangement of this nature. Upon the shaft O is fixed a toothed wheel, the teeth of which form an acute angle, but present one face coinciding with the radius, whilst the other makes with this radius a more or less considerable angle, or, in other words, one face of the tooth is perpendicular to the axis and the other forms a kind of inclined plane. This is called the ratchet-wheel. A lever O A, which moves independently of the shaft, turns upon the same axis O. In a point C of this lever is a ratchet or click C D, the end D of which drops into the teeth of the wheel, and is held in this position by a spring r fixed to the lever. When the lever is moved in the direction of the arrow, it drags the wheel with it, thereby causing the wheel to revolve to a certain extent. When the lever is moved in the contrary direction, the end D of the click slides up the inclined plane formed by the next tooth and drops into the following one, and so on over several teeth in succession. The reciprocating motion of the lever thus causes the shaft to revolve constantly in one direction, but in a discontinuous manner. As the shaft is usually acted upon by a resisting force which would tend to make it revolve in the contrary direction, a contrivance is required to prevent this backward motion. This contrivance is a click, or, as it is commonly called, a pawl I E, which turns about the point I, and drops at its other extremity into the teeth of the wheel; in this position it is held by a spring r' fixed, as well as the axis I, to the frame-work of the machine. When the wheel turns in the direction of the arrow, the inclined faces of the teeth slide over the *pawl* by forcing the spring r' to yield, and in this way a certain number of teeth escape. But when the lever turns in the contrary direction without moving the wheel, this latter is held in its position by the pawl, which cannot yield to the pressure exerted upon it by the tooth, because this pressure normal to the tooth has a direction E N passing between the axes of rotation I and O, and tending to drive the pawl towards the right, which is impossible, since the points O, E, I, are the summits of a triangle the sides of which are invariable.

2747.

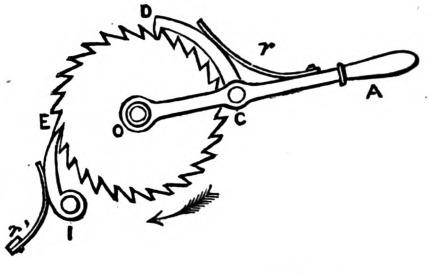

This kind of ratchet is frequently employed in those manual machines which are used to lift the materials in building. It has also been applied with some slight modifications to drags, cranes, presses, &c.

It will be seen that the shaft revolves during one-half only of the oscillation of the lever. But by placing a ratchet at each end of the axis O in such a way that one ascends while the other descends, the motion of the shaft may be rendered nearly continuous. This condition is, however, equally fulfilled by *Lagarousse's lever*, represented in Fig. 2748.

This lever, which turns about a fixed axis I, has two clicks jointed to it in the points C and C′; these clicks fall into the teeth of the wheel O upon the axis of the shaft. They are held in this position by springs fixed to the lever, and the wheel is held by a pawl as in the first arrangement. The way in which Lagarousse's lever works is evident. When the end A is lowered, the click C D drags the wheel round; at the same time the click C′ D′ is liberated and allows a certain number of teeth to escape successively. When, on the contrary, the end A is raised, the click C′ D′ drags the wheel round, and the click C D is liberated, allowing, in its turn, a certain number of teeth to escape. In this way the wheel is left stationary only during the very short space of time occupied in changing the direction of the motion of the lever.

In the example, Fig. 2748, the lever acts upon the toothed wheel by *pulling*; it might be made to act upon it by *pushing*, by merely changing the direction of the inclination of the teeth. The shaft, in this case, would turn in the contrary direction.

2748.

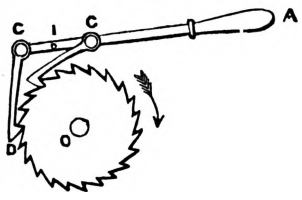

2749.

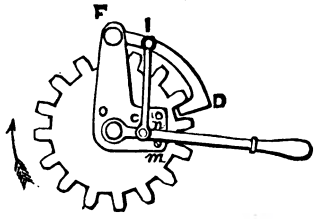

The ratchet-wheels described above are open to the grave objection of causing, when they are large, an intolerable noise, due to the shock of the click each time a wheel escapes. This objection has been removed by the arrangement represented in Fig. 2749. The teeth of the wheel are, in this case, nearly straight, and offer on each side only a slight inclination with respect to the radius. A bent lever F O *m n* turns about the axis of this wheel independently of the wheel itself. In the point F is fixed a click F D, the end D of which falls into the teeth of the wheel. A lever O A, to the end A of which the force is applied, also turns about the axis O; this lever and the click are connected by the rod C I jointed at its extremities. The play of the lever O A is limited by two pins or studs *m* and *n* fixed to the bent lever. When the end A is lowered, the click drops into the teeth of the wheel and forces it round. But when the end A is raised, the click is forced up by the rod C I; and the lever striking against the stud *n* turns the bent lever independently of the wheel. The end A being now brought back to its former position, the click is drawn down into the teeth of the wheel by the rod I C, and the wheel is again forced round. The stud *m* merely shows the position of the lever when the click has a firm hold of the teeth. With this arrangement, the intervals of rest are somewhat longer than in those described above.

Instead of the ratchet and toothed wheel, friction may be employed to bring about the same result. Of these contrivances, the two most important are that due to M. Saladin, of Mulhouse, and that known as Dobo's. We will first explain the principle of the former. To that end we will consider, in the first place, a horizontal cylindrical rod or shaft A B, Fig. 2750, revolving between guides, and suppose it embraced by a ring *a a′*, the inner diameter of which is a little greater. This ring is provided with a handle or lever *a b*, to the end *b* of which a motive force F may be applied in the plane of the symmetry of the system, which we will suppose to be that of the figure. On account of the play between the shaft and the ring, the latter will slide freely along the shaft when it is held nearly parallel with a right section. But if it is acted upon by a force F which causes it to assume the position shown in the figure, in which it touches the shaft in the two opposite points *a* and *a′*, sliding may become impossible, independently of the intensity of the motive force. For, in order that the ring may slide along the shaft while maintaining this position, the reactions R and R′ exerted by the shaft at the points of contact *a* and *a′* must make with the normals *a n* and *a′ n′* angles equal to the angle ϕ of the friction of the bodies in contact. Let I be the point of intersection of the directions of the forces R and R′. In order that the ring may be moved along with a uniform motion, or in order that it may be on the point of being so moved, equilibrium must exist between the three forces F, R, and R′, and consequently the force F must pass through the point I. This condition is sufficient for equilibrium (neglecting the weight of the ring), and to obtain the intensities of the reactions R and R′ we have only to transport the force F to I, in a contrary direction, and to decompose it according to the rule of the parallelogram of forces, in the directions *a* R and *a′* R′. If now we vary the angle which the reactions make with the corresponding normals, the point of meeting I of these reactions describes a branch of an equilateral hyperbola

2750.

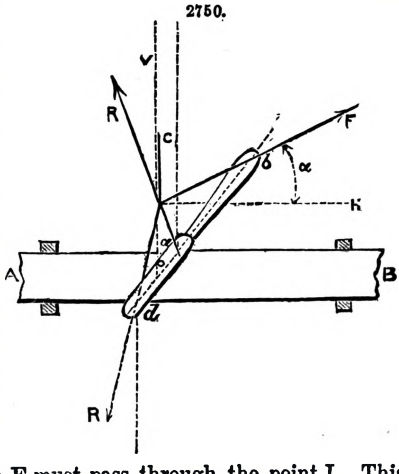

$a\,I\,c$ which passes through the point a and which has as its asymtote the straight line O V, drawn through the middle O of $a\,a'$ perpendicularly to the direction of the shaft, or to the horizontal I H. This granted, if the force F, passing through the point b, made with I H an angle greater than the angle $b\,I\,H = \alpha$, it would meet the hyperbola between I and a; therefore, the reactions, at the point of meeting, must make with the normals angles greater than the angle ϕ, which is impossible. This amounts to saying that, in this case, equilibrium would not exist, and the ring would be forced along the shaft. But if the force F made with the direction of the shaft an angle less than α, its direction would meet the branch of the hyperbola between I and C, and consequently the reactions R and R′ would then make with the normals an angle less than the angle of friction ϕ; and, in this case, sliding becomes impossible. This result is independent, as the student will see, of the intensity of the moving force F. From all this we conclude that, in the case in which the force F makes with the direction of the shaft an angle smaller than α, the ring being unable to slide along the shaft, the latter will be forced in the direction of A towards B, whilst if the angle of F with the shaft is greater than α, the ring may slide without dragging the shaft. Upon this fact, which may be easily verified by experiments, is founded the invention of M. Saladin.

Upon the axis of the shaft is fixed a wheel, the outer rim or fellies of which are broader than the arms or spokes in the direction parallel to the axis of rotation; the section of this rim is shown by the hatched portion of Fig. 2751. It is embraced by a kind of ring formed of the branches $a\,b$, $a\,b$, between which the arm $m\,n$ passes, and a sphere O fixed to the branches $a\,b$, $a\,b$, by a pin through its diameter $a\,a$. This sphere is affixed to a rod p which slides through a hole C in a piece on the end of a lever A B turning about the axis of the wheel, but independent of this wheel. Fig. 2752 shows the general arrangement of the wheel and the lever. In the position there indicated, the rim is seized or pressed between the branches $a\,b$ and the sphere O; it follows from this that when the end B′ of the lever is lowered, the rim is acted upon by a force which tends to make the wheel revolve in the direction of the arrow. When, on the contrary, the end B′ is raised, the end B descending, the branches or arms $a\,b$ assume a position normal to the circumference of the wheel, and may, in virtue of the play left between the circumference and the sphere O, follow the motion of the lever without exerting any force upon the wheel. A similar system $a'\,b'$, on the end of a fixed arm M N, plays the part of the pawl in a ratchet-wheel. When the wheel turns in the direction of the arrow, the branches $a'\,b'$ occupy a position normal to the circumference, and therefore allow the wheel to pass freely. But when the motion is arrested, the branches $a'\,b'$ fall back by their own weight, and if the motion had a tendency to take the direction the contrary of that indicated by the arrow, the circumference of the wheel would be pressed between these branches and the sphere, and the motion would thus be rendered impossible.

2751.

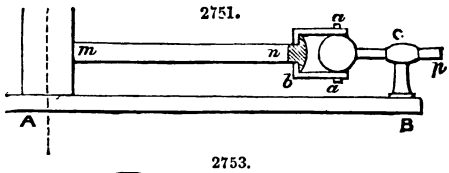

2752.

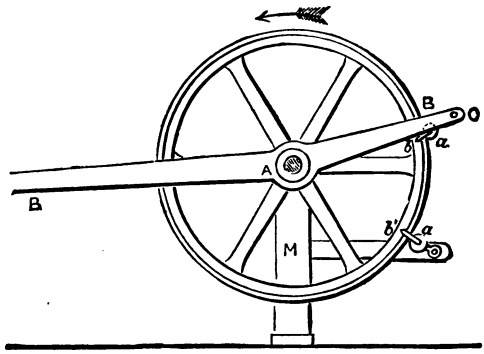

2753.

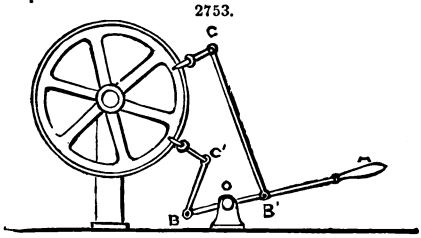

It will be seen that the wheel revolves during one only of the two oscillations of the lever. But a system similar to that of Lagarousse's may be adopted; this arrangement is represented in Fig. 2753. To a lever A B B′, turning about a horizontal axis O, are jointed two rods or arms B C and B′ C′, and to the ends of these C and C′ rings are adapted analogous to those of the system we have been describing; these rings embrace the circumference of a wheel fixed upon the shaft it is required to turn. When the end A of the lever is raised, the point C is raised also; the corresponding ring presses against the circumference of the wheel and causes it to revolve. The point C, on the contrary, is lowered, and the corresponding ring assumes a direction normal to the circumference, allowing the wheel to pass freely. The inverse of this takes place when the point A is lowered, so that the wheel is made to revolve with each movement of the lever.

Dobo's system is founded upon similar principles. A plane and a sectional view is given in Fig. 2754. Upon the shaft O O is fixed a disc A A, revolving with a gentle friction in a ring B B to which the motion is communicated, either by hand on the handles P P, or by some other means. Upon the disc A A in the hollow space between the shaft O O and the ring B B, are fixed a number of pieces M, M, M, turning about axes c, c, c, fixed to the disc, and terminating on the side of the ring in arcs of a circle having a radius a little less than that of the ring. Small springs r, r, r, also fixed to the disc, press lightly upon these pieces; and, as the distance from the axis c to the angle of the piece in contact with the spring is a little greater than the normal distance from the point c to the ring, the effect of the spring is to force this angle to rest against the ring. The normal $m\,O$ at the point of contact makes only a small angle of about 9 degrees with the straight line $m\,c$. When the ring is turned in the direction contrary to the arrow, the pieces M, M, M, force the

corresponding springs to yield, and, in virtue of the play which is thereby produced, the ring revolves without turning the disc. When, on the contrary, the ring is turned in the direction of the arrow, the springs establish contact between the pieces M, M, M, and the ring; the piece M not being able to turn about the point c in the direction that the ring tends to give it, it follows that the reaction of the ring passes through the point c. But the angle O m c being less than the angle of friction for the substances in contact, the piece M cannot slide with a relative motion upon the ring; consequently, the latter forces the disc, and of course the shaft upon which the disc is fixed, to revolve. The particular advantage offered by Dobo's system is that the extent of the motion communicated to the ring is absolutely arbitrary, instead of being, as in the other systems, limited to the oscillations of a lever.

2754.

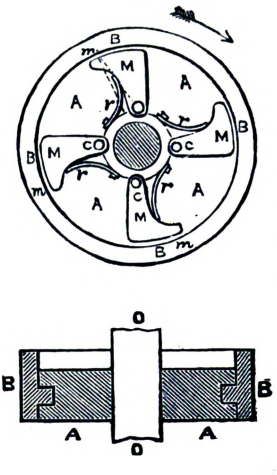

2755.

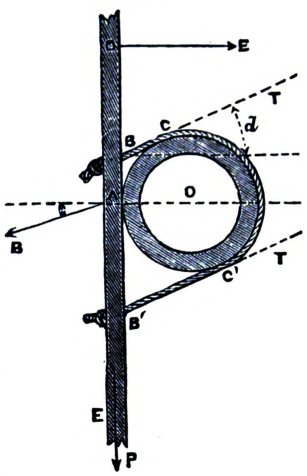

To the foregoing systems may be added that of Chameroy, which is employed in screwing together gas or water pipes. It consists of a cord B C C′ B′, Fig. 2755, which is passed round the pipe and fixed at each end to a lever D E, the lever being thus pressed against the pipe. If a force F be exerted upon the lever in the direction indicated in the figure, the cord cannot slip over the surface of the pipe, and consequently the pipe is turned upon its axis. If, on the contrary, a force be exerted in the contrary direction, the cord and the lever slip over the surface of the pipe, and may be brought up to their first position. Again applying a force in the direction of F, the pipe is turned upon its axis, and so on till the work is completed.

Viewed mathematically, these results appear as follows:—

Let P be the weight of the lever, T and T′ the tensions of the cords B C and B′ C′, R the reaction of the pipe upon the lever. For the sake of simplicity we will suppose the cords B C and B′ C′ parallel. Let α be the angle which their direction makes with the horizontal, and i the angle of the reaction R with this same horizontal. The conditions of the equilibrium of the lever D E give the three equations,

$$\begin{aligned} &F + (T' + T)\cos.\,\alpha - R\cos.\,i = 0,\\ &P - (T' + T)\sin.\,\alpha + R\sin.\,i = 0, \end{aligned}$$

and, making D A $= h$ and A O $= r$,

$$F h - P r - (T' - T) r - R r \sin.\, i = 0.$$

The condition of the slipping of the cord upon the pipe requires $T' = T e^{f\pi}$; putting f for the coefficient of friction, we make $e^{\pi f} = k$, whence $T' = kT$.

The equations of equilibrium thus become

$$\begin{aligned} &F + (k+1)\,T\cos.\,\alpha - R\cos.\,i = 0,\\ &P - (k+1)\,T\sin.\,\alpha + R\sin.\,i = 0,\\ \text{and}\quad &F h - P r - (k-1)\,T r - R r \sin.\, i = \end{aligned}$$

$$\text{or}\quad F\frac{h}{r} - P - (k-1)\,T - R\sin.\,i = 0. \qquad [1]$$

From the first two we deduce

$$\begin{aligned} &F\sin.\,i + P\cos.\,i = (k+1)\,T\sin.\,(\alpha - i),\\ &F\sin.\,\alpha + P\cos.\,\alpha = R\sin.\,(\alpha - i). \end{aligned}$$

If we deduce from these latter the values of T and of R, and substitute them in [1], we obtain

$$F\frac{h}{r} - P - \frac{k-1}{k+1}\cdot\frac{F\sin.\,i + P\cos.\,i}{\sin.\,(\alpha - i)} - \frac{(F\sin.\,\alpha + P\cos.\,\alpha)\sin.\,i}{\sin.\,(\alpha - i)} = 0,$$

a relation from which, by putting $\frac{k-1}{k+1} = m$, we deduce

$$F = \frac{P}{\frac{h}{r}\cdot\frac{\sin.\,(\alpha - i)}{(m + \sin.\,\alpha)\cos.\,i} - \tan.\,i}. \qquad [2]$$

This formula gives a negative value for F, when α is equal to or less than i. But in the present case i is the angle of the friction of the lever upon the pipe. Therefore, when the common inclination of the cords B C and B′ C′ becomes equal to or less than the angle of the friction of the lever upon the pipe, we have a result incompatible with the hypothesis, which shows that this

hypothesis is then inadmissible, and that consequently the apparatus cannot slide upon the surface of the pipe.

If the force be exerted in the direction contrary to F, the sign of F must be changed in the formulæ; also, the sliding motion having a tendency to take a contrary direction, we must put $T = T' e^{\pi}$, or $T' = \frac{1}{k} T$, that is, the k must be changed into $\frac{1}{k}$, which is equivalent to changing the sign of m; and, in accordance with the principles relative to friction, the sign of i must be changed. The formula [2] thus becomes

$$F = \frac{P}{\frac{h}{r} \cdot \frac{\sin.(a - i)}{(m - \sin. a) \cos. i} - \tan. i}. \qquad [3]$$

It will be observed that, provided sin. a be less than m, h may be so arranged as to render the denominator positive; therefore the force F is positive in this case. And the result being compatible with the hypothesis of the sliding, it follows that sliding may take place.

The above modes of producing motion is applied to various purposes, among which we may mention *sawing by machinery*, in which case the wood to be sawn has to be pushed forward while the saws ascend; and *weaving by machinery*, where a similar movement of the fabric is required.

Fig. 2756 represents a verge escapement. On oscillating the spindle S, the crown-wheel has an intermittent rotary motion.

2756.

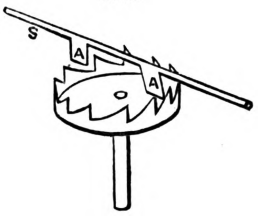

2757.

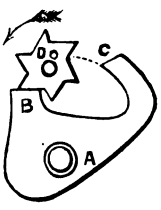

2758.

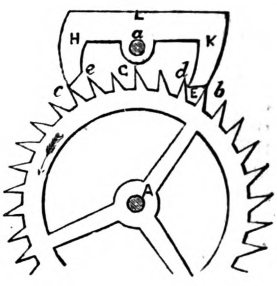

Fig. 2757. An escapement. D is the escape-wheel, and C and B the pallets. A is the axis of the pallets.

Figs. 2758, 2759. The former is what is termed a *recoil*, and the latter a *repose* or *dead-beat* escapement for clocks. The same letters of reference indicate like parts in both. The *anchor* H L K is caused, by the oscillation of the pendulum, to vibrate upon the axis a. Between the two extremities or pallets H K is placed the escape-wheel A, the teeth of which come alternately against the outer surface of the pallet K and inner surface of pallet H. In Fig. 2759 these surfaces are cut to a curve concentric to the axis a; consequently, during the time one of the teeth is against the pallet the wheel remains perfectly at rest; hence the name *repose* or *dead-beat*. In Fig. 2758 the surfaces are of a different form, not necessary to explain, as it can be understood that any form not concentric with the axis a must produce a slight recoil of the wheel during the escape of the tooth, and hence the term *recoil* escapement. On the pallets leaving teeth, at each oscillation of the pendulum, the extremities of teeth slide along the surfaces $c\,e$ and $d\,b$ and give sufficient impulse to pendulum.

2759.

Fig. 2760. Another kind of pendulum escapement.

Fig. 2761. Arnold's chronometer or free escapement, sometimes used in watches. A spring A is fixed or screwed against the plate of the watch at b. To the under-side of this spring is attached a small stop d, against which rest successively the teeth of the escape-wheel B; and on the top of spring is fixed a stud i, holding a lighter and more flexible spring which passes under a hook k at the extremity of A, so that it is free on being depressed, but in rising would lift A. On the axis of the balance is a small stud a, which touches the thin spring at each oscillation of balance-wheel. When the movement is in the direction shown by the arrow, the stud depresses the spring in passing, but on returning raises it and the spring A and stop d, and thus allows one tooth of escape-wheel to pass, letting them fall immediately to arrest the next. At the same time that this tooth escapes, another strikes against the side of the notch g, and restores to balance-wheel the force lost during a vibration. It will be understood that only at one point is the free movement of balance opposed during an oscillation.

2760.

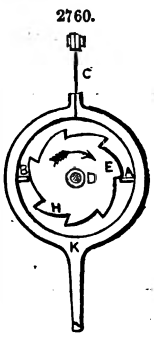

2761.

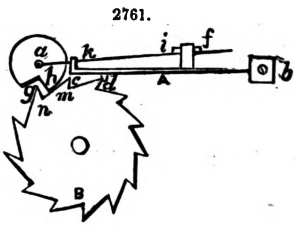

Fig. 2762. Stud escapement, used in large clocks. One pallet B works in front of the wheel, and the other at the back. The studs are arranged in the same manner, and rest alternately upon

the front or back pallet. As the curve of the pallets is an arc described from F, this is a *repose* or *dead-beat* escapement.

Fig. 2763. Duplex escapement, for watches, so called from partaking of the characters of the spur and crown wheel. The axis of balance carries pallet B, which at every oscillation receives an impulse from the crown teeth. In the axis A of balance-wheel is cut a notch into which the teeth round the edge of the wheel successively fall after each one of the crown teeth passes the impulse-pallet B.

2762.

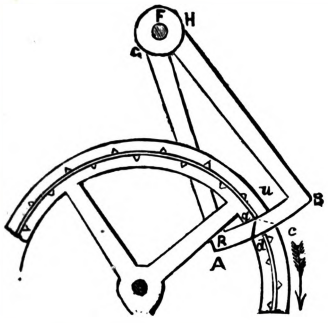

2763.

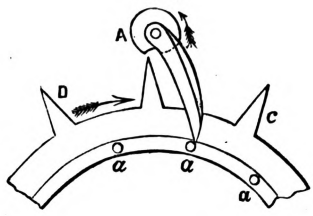

2764.

2765.

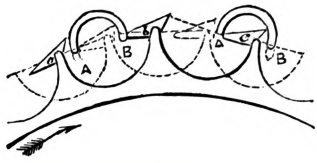

Figs. 2764, 2765. A cylinder escapement. Fig. 2764 shows the cylinder in perspective, and Fig. 2765 shows part of the escape-wheel on a large scale, and represents the different positions taken by cylinder A B during an oscillation. The pallets *a*, *b*, *c*, on the wheel rest alternately on the inside and outside of cylinder. To the top of cylinder is attached the balance-wheel. The wheel pallets are bevelled, so as to keep up the impulse of balance by sliding against the bevelled edge of cylinder.

Fig. 2766. Lever escapement. The anchor or piece B, which carries the pallets, is attached to lever E C, at one end of which is a notch E. On a disc secured on the arbor of balance is fixed a small pin which enters the notch at the middle of each vibration, causing the pallet to enter in and retire from between the teeth of escape-wheel. The wheel gives an impulse to each of the pallets alternately as it leaves a tooth, and the lever gives impulse to the balance-wheel in opposite directions alternately.

2766.

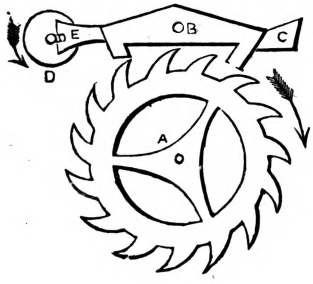

2767.

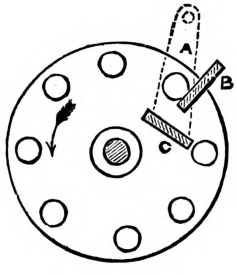

2768.

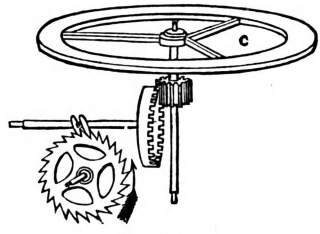

2769.

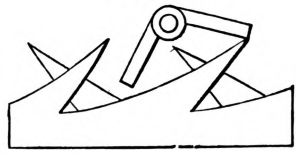

Fig. 2767. An escapement with a lantern-wheel. An arm A carries the two pallets B and C.

Fig. 2768. An old-fashioned watch escapement.

Fig. 2769. An old-fashioned clock escapement.

Figs. 2770, 2771. A clock or watch escapement; Fig. 2770 being a front elevation, and Fig. 2771 a side elevation. The pallet is acted upon by the teeth of one and the other of two escape-wheels alternately.

2770.

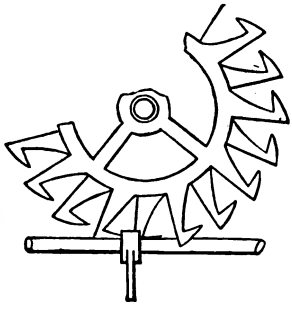

2771.

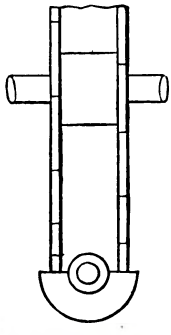

2772.

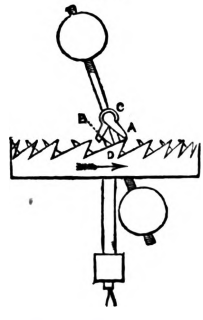

Fig. 2772. Balance-wheel escapement. C is the balance; A B are the pallets and D is the escape-wheel.

Fig. 2773. A dead-beat pendulum escapement. The inner face of the pallet E and outer face of D are concentric with the axis on which the pallets vibrate, and hence there is no recoil.

Fig. 2774. Pin-wheel escapement, somewhat resembling the stud escapement shown by Fig. 2762. The pins A B of the escape-wheel are of two different forms, but the form of those on the right side is the best. One advantage of this kind of escapement is that if one of the pins is damaged it can easily be replaced, whereas if a tooth is damaged the whole wheel is ruined.

2773.

2774.

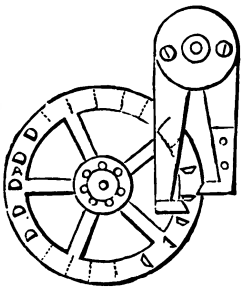

2775.

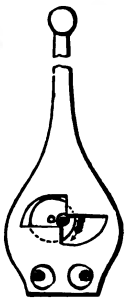

Fig. 2775. A single-pin pendulum escapement. The escape-wheel is a very small disc with single eccentric pin; it makes half a revolution for every beat of the pendulum, giving the impulse on the upright faces of the pallets, the horizontal faces of which are dead ones. This can also be adapted to watches.

Fig. 2776. Three-legged pendulum escapement. The pallets are formed in an opening in a plate attached to the pendulum, and the three teeth of the escape-wheel operate on the upper and lower pallets alternately. One tooth is shown in operation on the upper pallet.

Fig. 2777. A modification of the above, with long stopping teeth D and E. A and B are the pallets.

Fig. 2778. A detached pendulum escapement, leaving the pendulum P free or detached from the escape-wheel, except at the time of receiving the impulse and unlocking the wheel. There is but one pallet I, which receives impulse only during the vibrations of the pendulum to the left. The lever Q locks the escape-wheel until just before the time for giving the impulse, when it is unlocked by the click C attached to the pendulum. As the pendulum returns to the right, the click, which oscillates on a pivot, will be pushed aside by the lever.

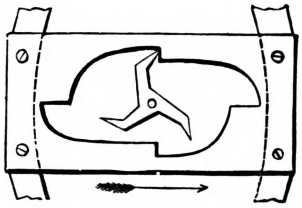

2778.

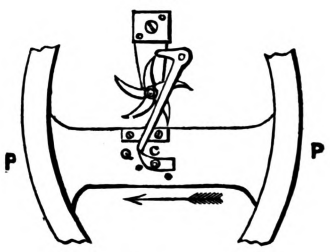

2780.

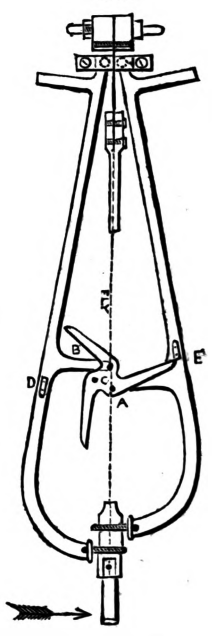

2777.

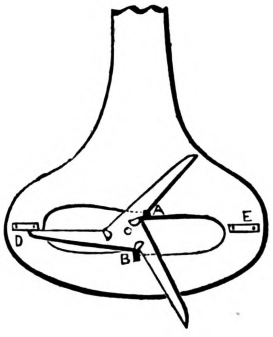

2779.

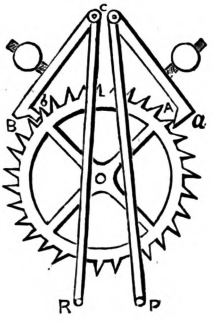

Fig. 2779. Mudge's gravity escapement. The pallets A B, instead of being on one arbor, are on two, as shown at C. The pendulum plays between the fork-pins P Q, and so raises one of the weighted pallets out of the wheel at each vibration. When the pendulum returns, the pallet falls with it, and the weight of the pallet gives the impulse.

Fig. 2780. Three-legged gravity escapement. The lifting of the pallets A and B is done by the three pins near the centre of the escape-wheel, the pallets vibrating from two centres near the

point of suspension of the pendulum. The escape-wheel is locked by means of stops D and E on the pallets.

Fig. 2781. Double three-legged gravity escapement. Two locking wheels A B C and *a b c* are here used with one set of lifting pins between them. The two wheels are set wide enough apart to allow the pallets to lie between them. The teeth of the first-mentioned locking wheel are stopped by a stop-tooth D on one pallet, and those of the other one by a stop-tooth E on the other pallet.

Fig. 2782. Bloxam's gravity escapement. The pallets are lifted alternately by the small wheel, and the stopping is done by the action of the stops A and B on the larger wheel. E and F are the fork-pins which embrace the pendulum.

Fig. 2783. Chronometer escapement, the form now commonly constructed. As the balance rotates in the direction of the arrow, the tooth V, on the verge, presses the passing spring against the lever, pressing aside the lever and removing the detent from the tooth of the escape-wheel. As balance returns, tooth V presses aside and passes spring without moving lever, which then rests against the stop E. P is the only pallet upon which impulse is given.

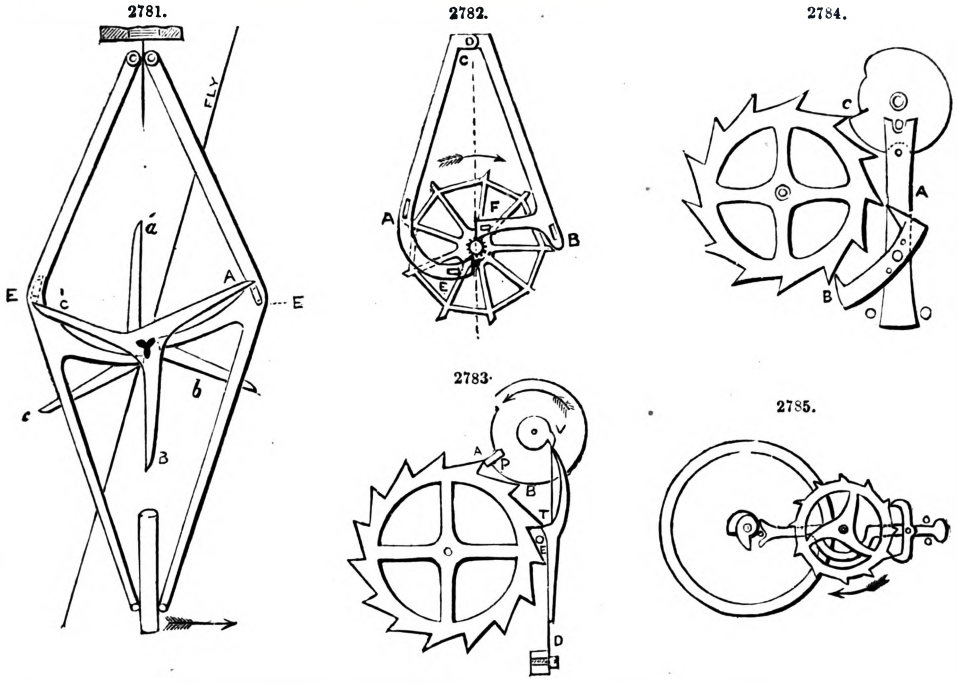

Fig. 2784. Lever chronometer escapement. In this the pallets A B and lever look like those of the lever escapement, Fig. 2766; but these pallets only lock the escape-wheel, having no impulse. Impulse is given by teeth of escape-wheel directly to a pallet C attached to balance.

Fig. 2785. G. P. Reed's patent anchor and lever escapement for watches. The lever is so applied in combination with chronometer escapement, that the whole impulse, balanced in one direction, is transmitted through lever, and the whole impulse in the opposite direction is transmitted directly to chronometer impulse-pallet, locking and unlocking the escape-wheel but once at each impulse given by said wheel.

Fig. 2786. G. O. Guernsey's patent escapement for watches. In this escapement two balance-wheels are employed, carried by the same driving power, but oscillating in opposite directions, for the purpose of counteracting the effect of any sudden jar upon a watch or timepiece. The jar which would accelerate motion of one wheel would retard the motion of other. Anchor A is secured to lever B, having an interior and exterior toothed segment at its end, each one of which gears with the pinion of balance-wheels.

2786.

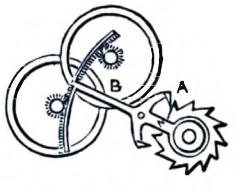

ESCAPE-VALVE. Fr., *Soupape de trop plein*; Ger., *Flucht Ventil*. See Water-works.

EVAPORATOR PAN. Fr., *Chaudière évaporatoire*; Ger., *Abdampfpfanne*; Ital., *Apparecchio d'evaporazione*; Span., *Cápsula*.

Sugar Evaporating Apparatus.—In concentrating cane-juice, after it has been expressed by the cane-mill, a variety of processes has been adopted; the apparatus most generally in use is called the Battery, and consists of five or six pans all placed in a line, each less than the preceding one in the proportion that the liquor is concentrated. The liquor is first put into the largest pan, and ladled from one to another successively till its arrival at the last, called the finishing teache, in which the sugar is brought to the required density. It is thence taken to the curing house, where it is placed in suitable vessels for allowing the complete drainage of all the molasses or uncrystallizable portion, a large part of which, however, can be rendered into sugar by reboiling, which is mostly effected in refineries.

In the battery process the greatest danger arises near the termination of the boiling in the teaches, under which the fire is immediately placed. The density to which the sugar has been brought renders carbonization difficult to be avoided at this stage of the process, and great care is necessary in the management of the fire.

To meet these difficulties, the apparatus, shown in Figs. 2787 to 2789, has been introduced, by which the requisite degree of concentration can be arrived at, without the possibility of applying a temperature injuriously high.

The Bour pan, named after the inventor, and now successfully in operation in many of our sugar-growing colonies, is shown in Figs. 2787 to 2789. It consists of a series of thin hollow discs of copper A A, securely fixed upon a central axis B. The discs are heated and maintained at a uniform temperature by steam, which enters at one end through the hollow axis B. A section of the axis is a cross, Fig. 2789, the edge of each portion having a flange set to one side, forming longitudinal grooves, the use of which is to retain the condensed water from the steam, and deliver it at the extreme end of the axis. The axis is about 9 ft. long, and has fitted upon it ten hollow discs A A, 3 ft. in diameter. In the inside of each disc are two spoons C, fixed to one side of the disc, and running from the centre to the circumference; these collect the water of condensation from the steam, and terminate in tubes, delivering the water into the longitudinal grooves in the axis B. On the outside of the discs are a series of small buckets D, which lift the liquor as the discs move round, and being open at the sides, allow a quantity of it to be distributed in a thin equable film over the entire portion of the surface of each disc that is not immersed in the liquid. This is a feature in the machine that is peculiarly favourable to the liberation of water from the liquor undergoing concentration, when it approaches the density necessary for finish. The axis B is mounted on a frame E carrying a flat shallow pan F, the bottom of which is curved to a radius about 1½ inch longer than that of the discs; into this pan the cane juice is put, after having been evaporated in open pans to 28° or 30° Baume. When the concentration has been carried to the required degree, the remaining liquor is run out of the pan by a valve and pipe G.

2787.

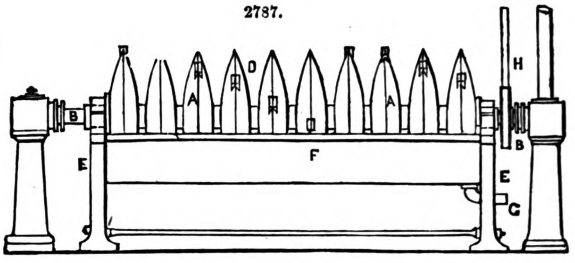

2788.

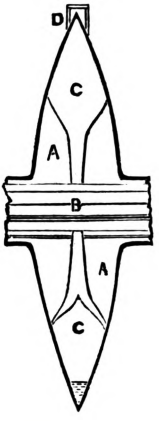

2789.

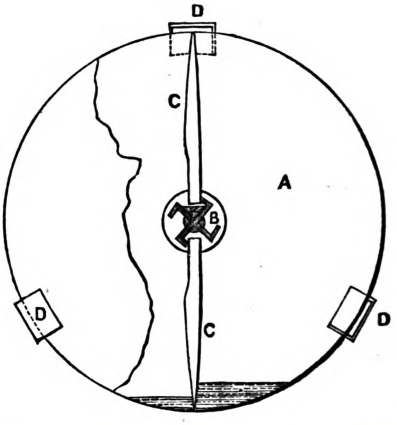

The discs are made to revolve about ten times a minute, and are driven by a strap and pulley H on the axis B. The exhaust steam from a high-pressure engine is made to enter at one end of the hollow axis at 2 lbs. a square inch pressure above the atmosphere, and the large amount of heating surface which the discs expose for the steam to act upon is the source of the efficiency of the apparatus as an evaporator. The low temperature under which the process is effected, the liquor never exceeding 170° Fahr., renders it peculiarly adapted for the Colonies, where skilled labour is very expensive, and in many places cannot be had.

The adoption of the Bour pan supersedes the use of the teache in the battery, and the granulation of the sugar is finished at a much lower temperature than by the teache, thereby avoiding any tendency to carbonization of the sugar. An apparatus designed for the same object has been previously introduced under the name of the Wetzel pan, so called from its inventor. A side elevation of this apparatus is shown in Fig. 2790. It consists of two hollow discs I I connected by a number of horizontal tubes K; steam is admitted to one of the discs through the hollow axis, and passes through the tubes to the other disc, in which the water of condensation collects and is carried off through the axis at that end. In the use of the Wetzel pan it was found that the crystallization of the sugar is most perfect at the two end discs; and this circumstance led to the adoption in the Bour pan of a series of discs in place of the tubes, whereby the whole apparatus now produces the superior crystals that were previously obtained only from the two end discs.

2790.

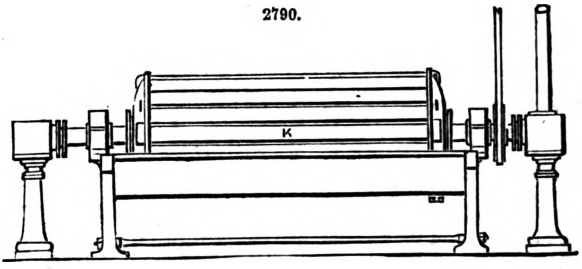

EXCAVATION. Fr., *Déblai; Tranchée;* Ger., *Einschnitt;* Ital., *Scavo, Sterro;* Span., *Desmonte.*
See Embankment.

EXHAUST-PIPE. Fr., *Tuyau d'échappement à vapeur;* Ger., *Ausströmrohr;* Ital., *Tubo di sfogo;* Span., *Tubo de escape.*
See Details of Engines, p. 1173. Locomotive.

EXPANSION GEAR. Fr., *Mécanisme de distribution de la vapeur;* Ger., *Expansions Steuerung;* Ital., *Congegno d'espansione;* Span., *Regulador.*
See Engines, *Varieties of.*

EXPANSION JOINT. Fr., *Joint glissant;* Ger., *Expansions-röhrenverbindung;* Ital., *Congiunzione a dilatazione libera.*

An *expansion joint* is a pipe so formed as to be compressed endwise by the expansion of the metal by heat.

EXPLOSIONS, *Boiler.* Fr., *Explosion des chaudières;* Ger., *Zersprinyen oder Platzen der Kessel;* Ital., *Esplosione;* Span., *Esplosiones.*
See Gunpowder.

EYELETTING MACHINE. Fr., *Machine à percer les œillets;* Ger., *Schnürloch Stossmaschine;* Ital., *Macchina da occhiellare;* Span., *Máquina para hacer ojetes.*

The *Eyeletting Machine* of Timothy K. Reed is very complete; it has a hopper K, Fig. 2791, an inclined shoot O leading therefrom, and a striking-up arrangement. The hopper K is cylindrical and placed in an inclined position; within it a brush radiates horizontally from the centre, nearly half-way round the circumference, and, by a rocking movement of the standard I, presses the eyelets through properly-shaped lateral openings in the perimeter directly into the shoot, with their flaring or flange parts down so as to keep the shoot full of them, a spring stop at their lower end preventing their escape. The die, which forms the new flange, is fixed in a socket C, over its end, and beneath the die a pin *o* passes up loosely through an anvil fixed to the frame B, through the lowest eyelet and through the work to be eyeletted. The movement of the lever G elevates the shoot and carries it out of range of the striking-up arrangement, the spring stop yielding in the lateral movement of the shoot. The hopper being connected with the shoot is thus brought to a less inclined position, and the brush within the hopper is rocked by the same movement. When these parts descend, the guide-pin *o* E goes down into its socket.

2791.

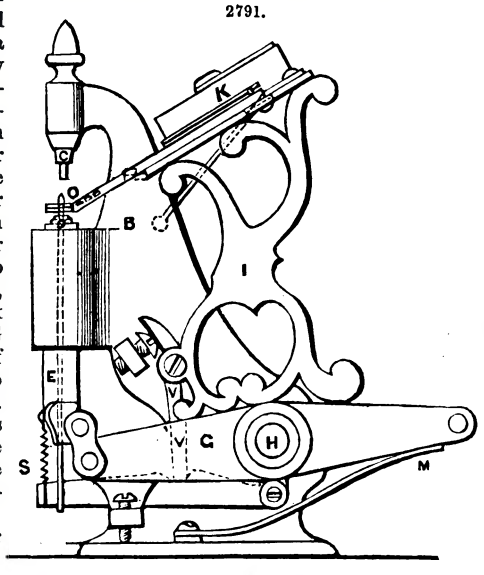

FAN. Fr., *Ventilateur, Machine soufflant;* Ger., *Ventilator, Windrad;* Ital., *Ventilatore.*

A *Fan* is an instrument used for producing artificial currents of air, by the wafting or revolving motion of a broad surface symmetrically formed.

Guibal's Ventilating Fan.—J. S. E. Swindell, in P. I. M. E., states that this ventilating fan is employed for the entire ventilation of the workings of the Homer Hill Colliery, which is situated at Cradley, near Stourbridge, at the south-west of the South Staffordshire coal-field, and consists of about ninety acres of the Thick or Ten-Yard coal. The colliery has been in operation between three and four years, and the plant and machinery are capable of raising 600 tons of coal a day.

The coal seam in that locality is very much cut up by numerous faults, as shown by the section of this colliery in Fig. 2792, which is taken along the line A B C D upon the plans, Figs. 2793, 2794. In the section, Fig. 2792, there is, beginning at the right-hand side, a piece of coal extending 200 yds. distance; then a down-throw at A, bringing the top coal to face the bottom coal; then a length of 380 yds. from A to B, followed by another down-throw of 31 yds. from B to C; then a length of 300 yds., and an up-throw of 15 yds. at D; and still farther to the west two or three smaller faults. These faults, together with numerous fissures, or black things, cause the ventilation of this colliery to require more than ordinary care; and it is from one of these last-named fissures that the gas which caused an unfortunate explosion in this colliery about three years ago is supposed to have issued, having been brought down by the falling roof or shut. Two shafts have been sunk, as shown in the section, Fig. 2792, each 7 ft. 6 in. diameter. The down-cast shaft is carried to a depth of 202 yds. for getting the lower portions of coal lying between the two largest faults; and the upcast shaft is sunk to a depth of only 165 yds. to the upper portion of the coal. A *jackey* pit 19 yds. deep, and an inclined road, connect the lower and upper portions of the seam, and by means of this pit and road the air of the ventilation current returns from the lower workings to the upcast shaft.

Coals are being raised at both shafts in cages having a sectional area in plan of 20 sq. ft., thus leaving for the passage of the air in the shafts by the side of the cages an area of about 24 sq. ft., the total sectional area of each shaft being 44 sq. ft. Previous to the application of the present mechanical ventilation, when the extent of the workings was small, and only natural ventilation from the heat of the workings was used without the aid of a furnace, it was found that the cages acting as pistons in the shafts reversed the current of air every time they ascended or descended;

and the consequence was that, if during the time the colliery was standing, say from Saturday until Monday, a quantity of gas had accumulated at the working faces; this had to be driven backwards and forwards, and in fact churned up with the air, until sufficiently diluted to allow of

2792

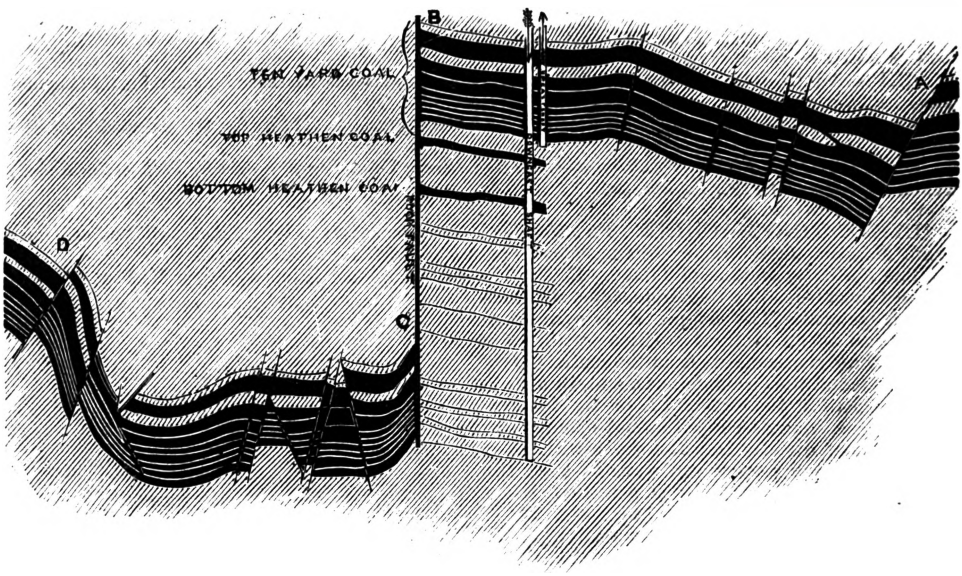

men entering the workings. This state of circumstances, especially with rapidly extending workings, could not be allowed to go on; and it was consequently suggested by Swindell that a mechanical ventilator should be adopted. As, however, a mechanical ventilator had never been used previously for the Thick coal workings, it had to be considered whether a ventilating furnace would not be better for the purpose but after the question had been thoroughly gone into, it was decided to adopt mechanical ventilation, and the plan of ventilator to be employed had then to be determined

2793.

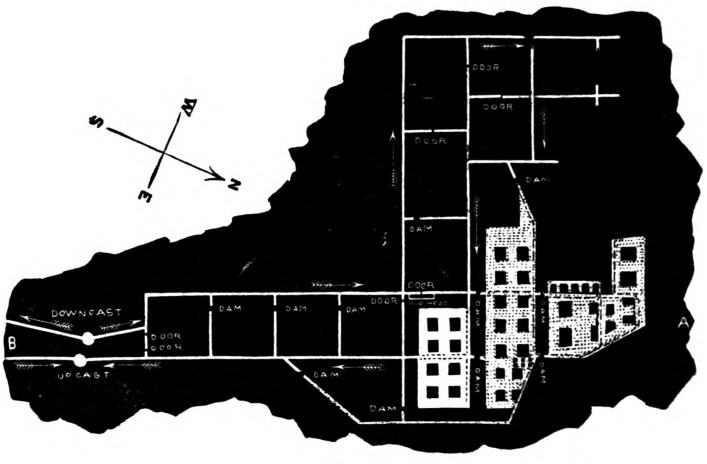

2794.

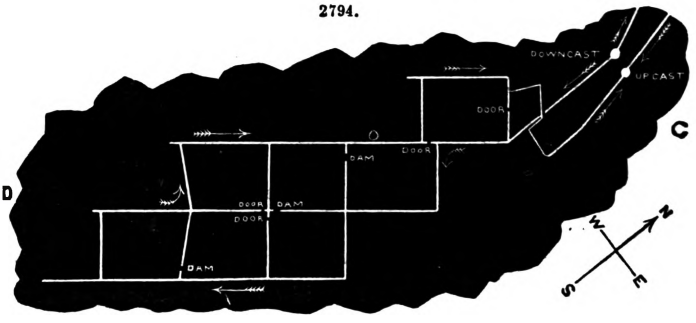

Amongst the earlier plans for the mechanical ventilation of mines, Struvé's ventilator was introduced in South Wales twenty years ago. It is shown in Fig. 2795, and is a large pump, consisting of a pair of inverted cylindrical vessels like gasholders, each 16 ft. diameter, which are worked up and down alternately with a 6-ft. stroke in annular tanks of water contained within closed chambers. They thus produce the effect of double-acting pumps, drawing in the air from the pit at the top and bottom of each vessel alternately through large inlet flap-valves, and discharging the air so collected at the next stroke through corresponding outlet flap-valves. The

vessels are worked up and down by a pair of beams driven by a steam-engine. This ventilator working at five double strokes, or 60 ft. a minute, delivers 13,000 cub. ft. of air a minute.

2795.

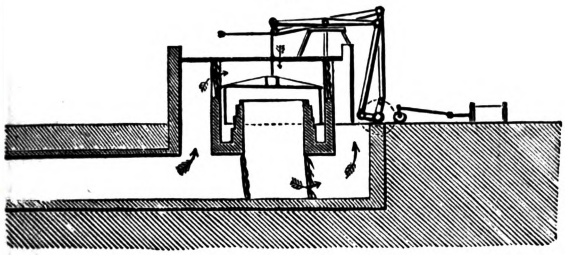

2796.

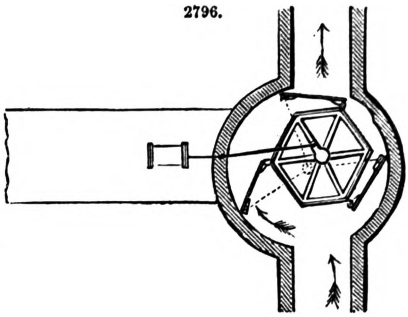

Lemielle's ventilator was used extensively at that time in the collieries of France and Belgium. It is shown in plan in Fig. 2796, and consists of a horizontal hexagonal drum revolving eccentrically within a cylindrical casing, 14 ft. diameter and 7 ft. deep, and carrying three vanes, which are made to open and close during each revolution by eccentric arms, like a feathering paddle-wheel; the drum works close against one side of the casing, giving a passage for the air on the opposite side only. By the rotation of the drum, therefore, the air is drawn in at one side of the casing and discharged at the other side, in a manner similar to the passage of the steam in some forms of rotary engines. This ventilator working at twenty-one revolutions a minute delivered 16,000 cub. ft. of air a minute, with a vacuum of 0·8 in. water-gauge, the velocity of the tips of the vanes being 900 ft. a minute.

The simplest form of mechanical ventilator was Nasmyth's ventilating fan. This ventilator, Figs. 2797, 2798, consists of a simple fan with eight radial vanes, 13½ ft. diameter and 3½ ft. width, driven direct by a small vertical steam-engine coupled to a crank on the end of the fan shaft. The fan works within a casing enclosed only at the two sides and entirely open round the circumference; and it draws the air in at the centre on each side. It ran at a speed of sixty revolutions a minute, or 2500 ft. a minute velocity of the circumference, and delivered 45,000 cub. ft. of air a minute; the lineal velocity of the air-current in the upcast shaft was 800 ft. a minute, with a vacuum of 0·5 in. water-gauge.

2797.

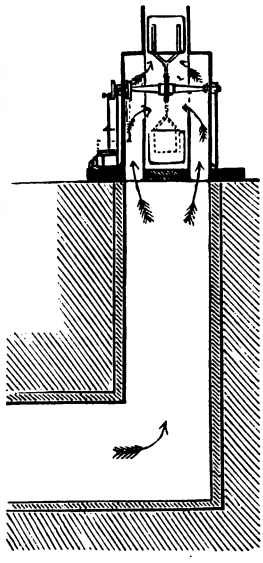

2798.

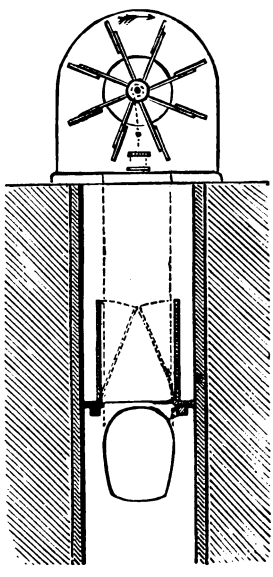

The two mechanical ventilators first referred to involve a complication of construction and a consequent risk of accidental derangement and stoppage, which form a serious objection to the introduction of mechanical ventilation in the place of furnace ventilation; but the fan ventilator, says Swindell, is so simple, compact, and substantial in its construction, as to be free from this objection.

The Guibal fan is represented in working order in Figs. 2799, 2800; Fig. 2799 being a longitudinal section, and Fig. 2800 a side elevation.

The ventilating fan F is 16 ft. 6 in. diameter and 4 ft. 9 in. wide, and is driven by a horizontal steam-engine K, Fig. 2799, coupled direct to a crank on the shaft of the fan. The engine is shown in plan, Fig. 2801; it has a 10-in. cylinder with 16 in. stroke, and is made of simple construction, very strong and durable. The steam for working the engine is supplied from the winding-engine boilers at 50 yds. distance, by a 3-in. pipe laid in sand underground, the pressure of steam being 40 lbs. a square inch.

The ventilator consists of an outer casing of brickwork E, Figs. 2799, 2800, the rotating fan F, an adjustable shutter G at the discharge orifice, and an outlet chimney H. The casing E is a ring of brickwork 14 in. thick, about two-thirds of the circumference being a circle concentric with the fan, and the remaining portion eccentric and with a larger radius, so as to enlarge the casing gradually towards the point of discharge. The upper portion of the arch springs from a cast-iron girder J, Fig. 2800, which extends across the opening into the chimney, and is formed of a wedge-shaped section to connect the two lines of brickwork. The side of the chimney, which forms the continuation of the bottom of the casing, is carried up inclining outwards, thus gradually increasing the sectional area of passage up to the top; the other three sides of the chimney being vertical, Figs. 2799, 2800. The sides of the fan-casing E are closed by vertical walls of brickwork 20 in.

thick; and a circular opening 6 ft. 7 in. diameter is made in the centre of one side for admitting the air from the mine to the fan. This opening is connected by a drift L with the upcast shaft M; the drift is 35½ sq. ft. in sectional area and 43 ft. long.

2799.

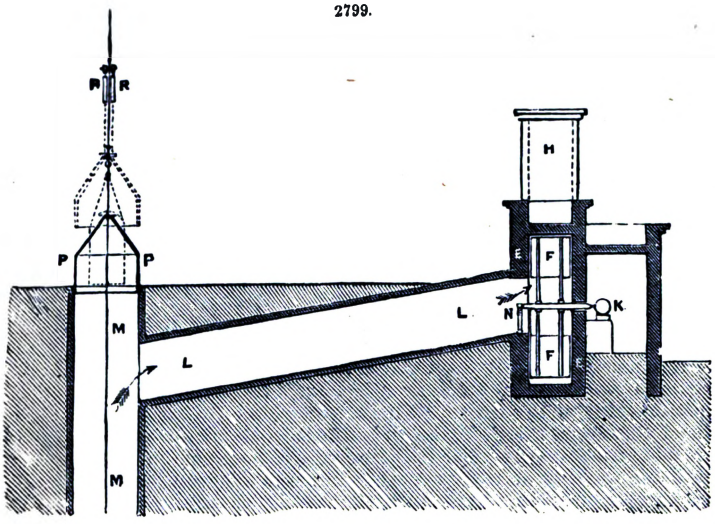

2800

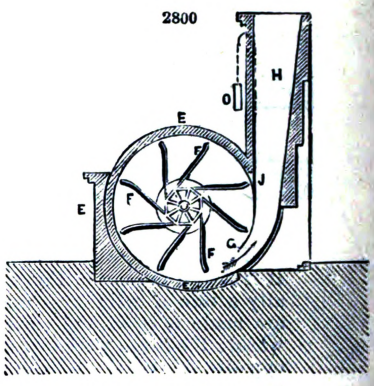

2801.

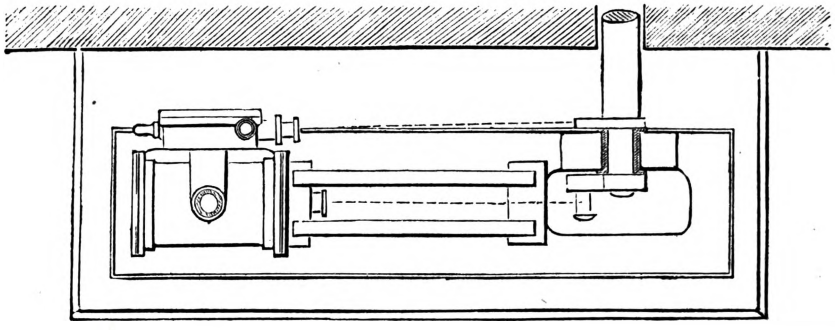

The centre framing of the fan consists of two cast-iron octagonal centres 4 ft. 7 in. diameter, which are keyed upon the main shaft made of wrought iron 7 in. diameter; and on each of the eight sides of these castings is bolted a wrought-iron arm made of a flat bar 3½ in. by ¾ in.; these arms are bolted together where they cross one another, so as to form a strong and light frame. The eight vanes of the fan are made of 1¼ in. deal, bolted to angle-irons that are riveted upon the wrought-iron arms; the vanes are each 4 ft. 9 in. wide and 5 ft. 7 in. long, giving an area of 26 sq. ft., and they work with 1 in. clearance at each edge from the side walls and 2 in. clearance from the circumference. Each vane is inclined backwards through the inner half of its length at an angle of 45° from the radial direction; and the outer half is curved forwards to the extent of 10 in. at the end. The inner ends of the vanes extend to 3 ft. 2 in. distance from the centre, the clear space in the centre being about ⅜ of the diameter of the fan. The outer end of the fan-shaft works in a carriage fixed upon a cast-iron girder N, which extends across the inlet opening in the side wall of the fan-casing E; and the inner end of the shaft is carried upon the engine-bed, Figs. 2799 and 2801. When the fan is running at its usual working speed of twenty-six revolutions a minute, the outer ends of the vanes move at the speed of 1350 ft. a minute, but the speed of the engine-piston at the same time is only 70 ft. a minute.

The adjustable sliding shutter G, Fig. 2800, at the outlet side of the fan-casing, is made of 1¼-in. deal boards similar to those of the vanes of the fan, sliding in cast-iron grooves that are built into the side walls; these grooves are made to the same circle as the upper part of the fan-casing, with the same clearance from the tips of the vanes. The boards forming the sliding shutter are bolted to flexible strips of hoop iron, so as to allow of their freely following the curved groove; and the shutter can be raised or lowered as desired by means of a chain passing over a pulley near the top of the outlet chimney, with a balance-weight O, Fig. 2800, the upper end of the shutter sliding up within the chimney. This adjustable shutter is used in the varying conditions of the underground workings, for securing the most effective results from the fan by adjusting from time to time the area of discharge-opening in accordance with the quantity of air to be discharged at any time. The opening of the outlet chimney is 3 ft. 3 in. by 4 ft. 11 in. at the bottom, and increases to 6 ft. by 4 ft. 11 in. at the top, giving an area of discharge of 29·4 sq. ft. The total height of the chimney is 32 ft. from the bottom of the fan.

In applying the ventilating fan at the colliery, an arrangement had to be made for covering the

top of the upcast shaft, in order to prevent the air from being drawn in by the ventilator at the top of the shaft instead of from the workings below. There were two ways of doing this; either to enclose and cover a sufficient extent of ground round the shaft for allowing the tubs to be changed within closed doors; or to have a movable cover over the shaft, to be raised like the ordinary fence at the mouth of the shaft every time the cage ascended. The latter method was adopted as the simplest and most convenient, and it has been found to answer every purpose. The movable cover of the shaft, as shown in Fig. 2799, consists of a rectangular wood box P, about 6 ft. square and 3 ft. 6 in. high, upon which is a pointed roof with a hole 8 in. square at the top for the winding rope to work through; and this hole is covered with a loose sliding piece of wood, through which the rope works in a close-fitting hole, so that every time the rope oscillates laterally this sliding piece moves freely with it in any direction, without uncovering the larger hole. The movable cover is connected to two balance-weights R by chains passing over pulleys fixed at the top of the conductors; and the cage every time it reaches the top of the shaft raises the cover, as shown by the dotted lines in Fig. 2799, the strain being relieved from the winding rope by the balance-weights, so that the cover as now balanced is not so heavy on the rope as the ordinary fence at the other shaft.

The course of the current of air in the workings of the colliery is shown by the arrows on the plans, Figs. 2793, 2794. The current passes from the downcast shaft to the first split at a depth of 165 yds., where the greater portion passes along the gate roads for a distance of 810 yds. in the upper workings, returning by the gate roads and air-head for 500 yds. distance to the upcast shaft. The remaining portion of the in-going air descends to the second split at a depth of 202 yds., and passes along the gate roads 530 yds. to the lower workings, returning by the gate roads and jackey-pit and air-head, 710 yds. distance to the upcast shaft. Here it joins the return air from the first split; and the whole quantity of air passes into the ventilating fan through the inclined drift L, Fig. 2799, of 43 ft. length, which goes off from the upcast shaft at 6 ft. depth below the surface.

The fan is kept running in ordinary working at about twenty-six revolutions a minute, at which speed 13,600 cub. ft. of air a minute pass into the ventilator with a vacuum of 0·15 in. water-gauge. This supply of air is found to keep the workings well ventilated, their average temperature being only 54°, and only 60° in the hottest portion of the workings even when the temperature was 75° at the top of the downcast shaft on the hottest day observed. The fan can be got up to full speed from standing, in only about one minute's time. At the speed of sixty-five revolutions a minute, 37,500 cub. ft. of air a minute pass into the ventilator, with a vacuum of 1·02 in. water-gauge and at the extreme speed of ninety-six revolutions a minute, 51,700 cub. ft. a minute pass into the ventilator, with a vacuum of 1·75 in. water-gauge.

When the ventilator is standing still with the adjusting shutter wide open, about 9130 cub. ft. of air a minute pass through it from the natural current of ventilation due to the heat of the workings. When the ventilator is stopped after running at twenty-six revolutions a minute, and delivering 13,600 cub. ft. of air a minute, the quantity of air passing through it in the sixth minute after stopping is 4260 cub. ft., and in the sixteenth minute 4080 cub. ft., the adjusting shutter in this case being only half open. When it is stopped after running at sixty-five revolutions a minute, and delivering 37,500 cub. ft. a minute, the air passing through it in the sixth minute afterwards is 4790 cub. ft., and in the sixteenth minute 4400 cub. ft., the shutter being half open.

The lifting of the cover at the top of the upcast shaft, and the passage of the *cages* in the two shafts, affect the vacuum in the fan drift in the following manner, as shown by the *water-gauge* placed about midway in the drift, when the fan is running at about sixty-five revolutions a minute.

	Water-Gauge.
Cover open and cage empty	0·95 in.
Cover closed and cage standing still	1·10 „
Cover closed and cage beginning to descend in upcast shaft	1·25 „
Both cages half-way in the two shafts	1·45 „
Cage reaches bottom of upcast shaft	1·15 „
Cage ascending in upcast shaft	1·05 „
Both cages half-way	1·00 „
Cage at top of upcast shaft and empty, and cover open as at first	0·95 „

Whilst the cover is open at the top of the upcast shaft during the changing of the tubs, $\frac{7}{16}$ of the total quantity of air passing into the ventilator is drawn in direct from the surface through the open top of the shaft, occasioning a momentary loss of that amount in the ventilation of the workings. This occurs about once every minute when the pit is in full work, and the cover remains open for about six seconds each time, or $\frac{1}{10}$ of the whole time of working. The total loss of air from the uncovering of the pit top amounts consequently to less than $\frac{1}{20}$ of the whole work of the ventilating fan.

One object in the design of the Guibal ventilating fan is to discharge the air into the atmosphere with as low a final velocity as possible; because whatever excess of velocity there is in the discharged air beyond the velocity of the ascending current in the shaft is an absolute waste of power. The ascent of air in the shaft at the Homer Hill Colliery being 13,600 cub. ft. a minute with the ventilator running at twenty-six revolutions a minute, and the sectional area of the shaft being 44·2 sq. ft., the velocity of the current of air in the shaft is about 300 lineal ft. a minute. The velocity of the air in rotation at the circumference of the fan at the above speed of twenty-six revolutions a minute is 1350 ft. a minute, or $4\frac{1}{2}$ times the velocity of the ascending current in the shaft; but the area of the orifice of the outlet chimney being 29·5 sq. ft., the air cannot have a greater velocity at its exit, if it fills the outlet chimney, than 460 ft. a minute, or only $1\frac{1}{2}$ times the velocity of the current in the shaft. The surplus moving power in the quicker moving air

at the extremities of the fan arms is therefore restored by the retarding of the current at the outlet, instead of being lost, as would have been the case if the fan had discharged direct into the air round its whole circumference.

Another object in this ventilator is to obtain the maximum useful effect of the fan under each of the varying circumstances under which it has to work in order to meet the requirements of the mine ventilation; because the fan can only work to the best advantage with the exact area of discharge opening that is suited to the quantity of air to be discharged in each case, and the resisting pressure at that particular time. If the discharge opening is too large, a back current into the fan from the upper part of the discharge opening is produced, causing a waste of power by putting useless air into motion; and if, on the other hand, the discharge opening is too small, an unnecessary resistance to the discharge of the air is produced, with a consequent waste of power.

The following case that occurred at the Homer Hill Colliery will illustrate the facility with which the ventilator can be immediately adapted to any alteration in the requirements of the ventilation. A length of about 70 yds. of gate road having been cut off from the course of ventilation, it soon became filled with gas; and in order to remove the accumulation of gas, and allow the men to enter this portion of the workings, a dam sheet was put across the in-going airway, just beyond the entrance to the gate road that had to be cleared of gas, thereby partially stopping the passage of the air-current; and an air-pipe was carried from the entrance of the gate road through a fixed dam into the return air-passage. The ventilator was then set running at double speed, about sixty revolutions a minute, thus maintaining the ordinary ventilation of the pit by drawing the same quantity of air past the sides and bottom of the dam sheet as had previously, with the ordinary speed of twenty-six revolutions a minute, been passing through the unobstructed airway before the dam sheet was put up. The remaining portion of the air being forced into the gate road that was charged with gas, began immediately to drive the gas forward through the air-pipe, and the gas was cleared from the gate road as fast as the air-pipe could be extended along it from the entrance by laying down additional lengths of pipe; the whole of the accumulation of gas was thus cleared out in the course of a few minutes throughout the entire distance, without interfering with the regular ventilation of the pit.

In the use of the ventilating fan, as the ventilation of the pit is dependent upon the continuous working of a piece of machinery, it has been contemplated to provide by the erection of a duplicate engine and fan against any accident happening to the machinery; but the construction of the engine and fan is so simple and durable, and the wear and tear so slight in consequence of the very moderate speed of working, that no such provision of duplicates has yet been made in any instance; and in the writer's opinion it is only in the case of a fiery mine that any such provision will really be required. The liability of the ventilator to get out of order is exceedingly small; and no accidents of any consequence to the maintenance of the ventilation have yet occurred with any of the fourteen ventilators now (1869) at work at different mines, some of which are as large as 30 ft. diameter and 10 ft. width, and capable of delivering 100,000 cub. ft. of air per minute with a vacuum of 3 in. column of water.

At Pelton Colliery, in Durham, where one of the Guibal ventilators has replaced a ventilating furnace, the following is the comparison of the two modes of ventilation. The depth is 180 yds., and with the furnace the average temperature was 235° in the upcast shaft, the quantity of air circulated 48,000 cub. ft. per minute, and the vacuum 0·9 in. water-gauge; and the consumption of coals was 90 tons per fortnight. With the fan the consumption was 60 tons per fortnight, with nearly double the quantity of air supplied, or 82,370 cub. ft. per minute, and a vacuum more than double, or 2·15 in. *water-gauge*. In order to obtain such an increased volume of air with the furnace ventilation, so high a temperature would have been required in the upcast shaft as probably to be impracticable; and the consumption of coals would have been increased to about 290 tons a fortnight, instead of the 60 tons consumed by the fan for the same work.

Thus where the fan has replaced the furnace, it has been proved by actual comparison that the economy of coal resulting from the change is very great. If, indeed, fuel were the only consideration, there would no doubt be a certain depth of shaft, combined with other conditions, at which a given quantity of coal could be burnt in a furnace so as to produce a current of ventilation equal to that produced by the consumption of the same quantity of coal in raising steam for working a ventilating fan. Such a depth, however, could not be less than 400 yds., and would involve an extraordinary high temperature in the upcast shaft with the furnace ventilation. The presence of cast-iron tubbing in the upcast shaft, even though protected with fire-brick, and also of pump or steam pipes, is a very serious objection to the adoption of a furnace; and when the upcast shaft is a working shaft, the wear and tear becomes very great, and the heat and smoke from the furnace render the shaft almost useless for men to work in. In the case of the Homer Hill Colliery it is estimated by Swindell that to produce a current of 45,000 cub. ft. a minute, with a vacuum of 1 in. water-gauge, an average temperature of about 150° would be required in the upcast shaft if a furnace were employed.

With respect to the ventilator of Guibal, the following comparisons were made by W. Cochrane, and printed in the Transactions of the North of England I. M. E., 1865;—

The ventilator employed by Cochrane is illustrated in detail by Figs. 2802 to 2807. This fan also consists of eight vanes, each of which is formed of 1¼-in. oak cleading, secured by bolts to a pair of bars and angle-irons, which are bolted to two cast-iron octagonal bosses keyed on the main shaft. These bars being carried past the boss and interlaced, as shown in the accompanying drawing, form a very firm structure, at the same time simple and inexpensive, admitting of a speed of as much as one hundred and fifty or two hundred revolutions a minute, without any danger. This is an important improvement in construction; which improvement will be seen from Atkinson's paper upon the Elsecar Fan, of which we shall speak presently.

2802.

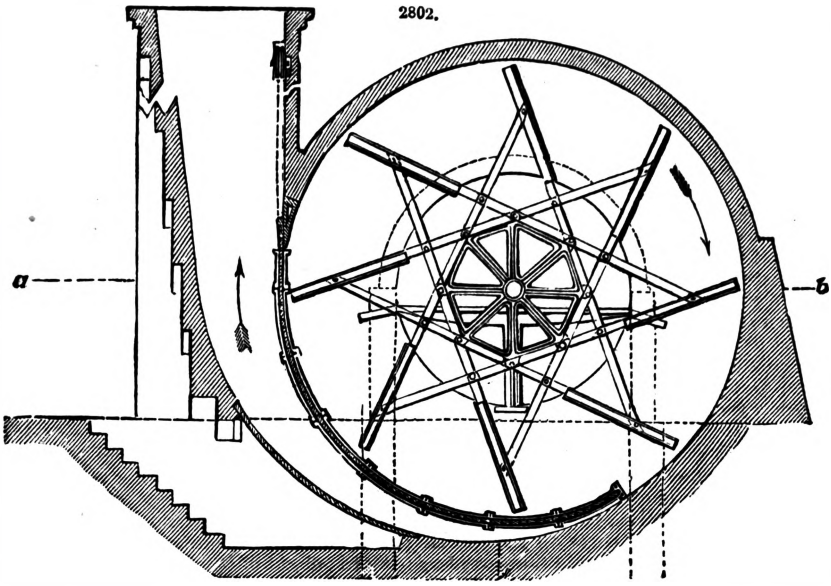

2803.

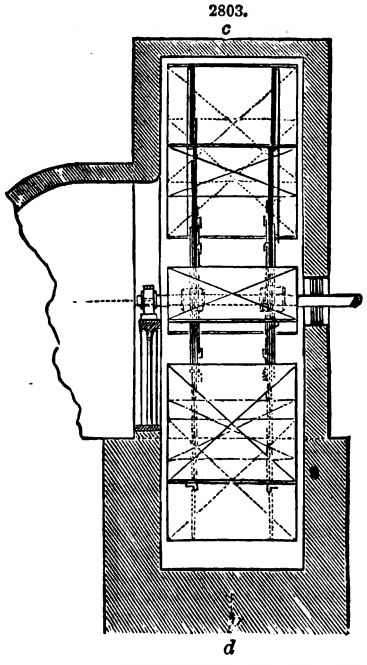

Section following the line *e f*.

2805.

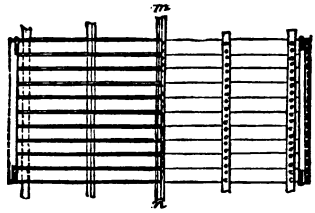

2806.

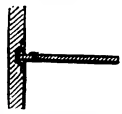

Section following the line *x y*.

2807.

Section following the line *m n*.

2804.

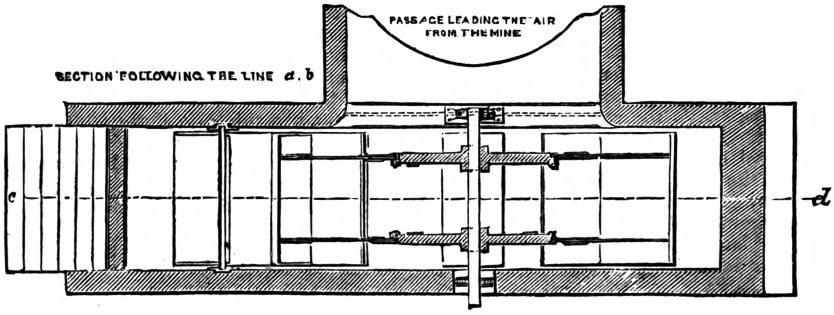

The outside diameter of the vanes is 23 ft., the width 6 ft. 6¾ in., and each vane extends about 8 ft. into the interior of the fan, being inclined at an angle of *sixty-seven and a half degrees* to a radial line through the apex of the octagonal boss.

The main shaft is driven by a vertical direct-acting engine, with cylinder 23⅝ in. internal diameter, and 19$\frac{11}{16}$ in. stroke, worked at high pressure.

A wall is built on each side of the fan, giving about 1 in. clearance to the side of the vanes. Outside of one wall the engine is fixed, and in the other an inlet orifice of proper size is left, such inlet being connected with the upcast shaft. An arch is carried over the fan, giving about 2 in. clearance to the vanes, and in continuation of this arch an invert to a point about one-eighth of the circumference below the centre line, at which point the 2 in. clearance is increased gradually, expanding the lower curve of the casing till it ends in the sloping side of a chimney formed between the continuation of the side walls of the fan-erection; see Fig. 2802. A sliding shutter is fitted into cast-iron grooved rails for about one-fifth of the circumference, which enables the concentric circle of the top arch to be completed nearly round the fan—that is, giving the 2 in. clearance to the vanes. This shutter is worked by a chain passing over *sheaves* at the top of the chimney and to the outside. For convenience, a manhole-door is left at the foot of the sloping side of the chimney.

The fan being set in motion, the air is drawn through the inlet from the mine, and discharged below the shutter into the chimney, from the top of which it is seen to issue at no great velocity.

The theory and practice of exhausting fans having hitherto been, that there should exist a free discharge all round the circumference, this is the first application to mining ventilation of an exhausting fan which is covered in as described, and in the complete arrangement of which are found the requisite correctives of such a covering, which, without them, would still offer only a very ineffective machine. By the covering, the opposing action of winds is prevented, which is a serious check to fans discharging all round the periphery; but the object of chief importance is to prevent the communication of motion by the revolving vanes to the surrounding exterior air, and the formation of currents, which, in an open-running fan, creep along the sides and vanes from the exterior air to supply the partial vacuum caused in the interior by the revolution of the fan; the demonstration of these facts was well seen in an open-running fan at the Tursdale Colliery, county of Durham. A sensible diminution of the ventilating current was perceived in this fan, with a wind from the N. or S., the direction in which the fan discharged; in one instance, with a high south wind, reducing the air-current one-third of its usual quantity with a calm atmosphere. The air-currents from the exterior at all times could be distinctly seen entering the fan by the drawing in with them of the exhaust steam, which was at that time allowed to discharge from the fan engine at the level of the top of the fan. In consequence of Guibal's system being thoroughly and satisfactorily tested in Belgium, it was resolved to adopt the covering and chimney to the Tursdale fan, which was done, but only temporarily in wood, the joints being made as nearly air-tight as possible in the covering, but not in the chimney. The improvement will be seen on comparing the following results:—

	Revolutions a minute.	Cubic Feet of Air a minute.	Water-Gauge.	Steam-Pressure at Cylinder.	Coal consumed in 24 hours.
Open running—May, 1862 ..	50	22,170	·55	25 lbs.	5 tons.
Covered in—October, 1862 ..	50	32,930	90	25 lbs.	4 tons.

while the power utilized was found to be increased from 12·69 per cent. when open running, to 26·3 per cent. when adapted as above described.

Thus a heavy loss by the entry of exterior air into the open-running fan is evident. On the other hand, with the casing and other appliances of the Guibal system, the space outside the vanes, that is between their extremities and the inside of the casing, presents an aid to the ventilating power, instead of a source of loss. Contrary to what might be expected, and contrary to theory (for the air is thrown off the extremities of the vanes against the casing), a partial vacuum is found in this space, the amount of which, at various speeds, will be seen from the annexed tabulated results of experiments. But the covering in of the fan alone would produce the following disadvantages;—it would check the free discharge of the air, and would communicate to it a high velocity—hence the adaptation of the other parts, namely;—

The shutter and chimney, which are the other new elements in this system. By means of the shutter enlarging or diminishing the outlet, the volume of air drawn by the fan can be so regulated as to suit the special requirements of the mine, and produce the greatest economical effect. By no known theory can the quantity of air be determined which such a ventilating machine will draw from any particular mine; hence the necessity of experimental trials to determine the best size of outlet and the easy means employed for this purpose. If the outlet be too large, air will be drawn back into the fan, as is the case with open-running fans, and in this also if the shutter is imperfectly adjusted. If the outlet be too small, the air cannot get quickly enough away. In either case, economical effect is lost; and as the circumstances of a mine are never long the same, it seems evident that a machine incapable of such an adjustment must be defective.

The following experiment upon the Elswick Fan to fix the position of the shutter shows the results above mentioned.

Calling the lowest position of the shutter zero, and the highest 1, the intermediate positions will be expressed fractionally;—

	No. of Revolutions a minute.	Water-Gauge near Inlet.	Position of Shutter.	Remarks.
a	55	1·150	1	
b	60	·350	0	Steam-pressure 32 lbs. constant, and valve not altered.
c	55	·800	$\frac{1}{4}$	
d	52	1·040	$\frac{1}{4}$	
e	55	1·100	$\frac{1}{4}$	Steam increased in quantity to get 55 revolutions.
f	52	1·085	$\frac{1}{8}$	Steam as at *e*.
g	55	1·180	$\frac{1}{8}$	Steam increased in quantity to get 55 revolutions.

The position of $\frac{1}{8}$ was fixed as the best for these conditions.

The chimney contributes also greatly to the useful effect, being shaped for this special object —the sectional area increasing upwards. This enables the air which is discharged under the shutter at a high velocity to expand, and, spending its force in the chimney, to pass out at a very low velocity, thus benefiting the ventilating power to the extent of this difference. It is true that the high velocity of discharge absorbs a corresponding amount of the power applied to the fan, but the attainment of the partial vacuum in the interior of the fan, due to the centrifugal force of the vanes in the first instance, must impart to the discharged air their velocity, and it is to restore some portion of this power and make it useful for the ventilating effect that the chimney is arranged. From the following Table of results the depression of the water-gauge will be noticed in the positions, Nos. 3, 4, 5, and 7, the three first being fixed into the space between the vanes and interior of the casing, No. 7 being near the foot of the chimney.

No. of Experiment.	Stroke of Engine a minute.	Position of Shutter.	Indicated H.P. applied.	Indicated H.P. transmitted to the Fan.	Loss in the Engine—expressed in H.P.	Indications of Anemometer 112 A, in Drift at Bank, a minute.	Velocity of Air a minute, calculated from Formula $V = \sqrt{1{\cdot}2327\ R^2 + 18930}$.	Cubic Feet of Air a minute.	Water-Gauge at No. 1 Station, Area 74·27 ft.	Calculated useful effect in H.P.	Calculated per cent. useful effect on the whole Power applied.	Calculated per cent. useful effect on Power transmitted to the Fan.	Water-Gauges. No. 1.	No. 2.	No. 3.	No. 4.	No. 5.	No. 6.	No. 7.
							ft. a min.												
1	20	1	2·59	1·99	·60	265·	324·8	24,123	·200	·76	29·34	38·2	·200	·125	·100	·050	·025	0·00	0·03
2	38	1	9·94	8·37	1·57	450·	518·2	38,487	·600	3·64	36·62	43·5	·600	·550	·250	·125	·100	0·25	0·15
3	38	$\frac{1}{4}$	10·02	8·81	1·21	467·5	537·	39,883	·550	3·45	34·43	39·1	·550	·500	·200	·075	·100	·25	·125
4	39	$\frac{1}{4}$	9·72	7·80	1·92	425·	491·5	36,504	·500	2·88	29·63	37·0	·500	·450	·150	·025	·050	·25	·135
5	39	$\frac{1}{4}$	8·21	6·85	1·36	337·5	399·1	29,641	·250	1·17	14·26	17·1	·250	·100	+ ·375	+ ·500	+ ·200	·035	·250
6	41	0	7·63	6·00	1·63	256·25	316·	23,469	·100	·37	4·85	6·2	·100	·000	+ ·400	+ ·475	+ ·150	·025	·065
7	55	1	23·84	20·94	2·90	672·5	759·1	56,378	1·200	10·66	44·71	50·9	1·200	1·100	·400	·275	·300	·05	·200
8	55	..	..	..	..	680·	767·4	56,995	Not recorded.				..	..	..	..	..	..	..
9	57½	1	23·53	19·73	3·80	722·5	813·8	60,441	1·400	13·33	52·40	67·56	1·400	1·350	·500	·325	·350	·05	·310
10	87	1	69·96	58·16	11·80	1030·	1151·8	85,544	2·550	34·37	49·13	59·10	2·550	2·500	1·00	·650	·675	·10	1·200
11	94	1	..	Not indicated.		1266·6	1413·	104,943	3·150	52·09	..	..	3·150	3·200	1·150	·900	·800	·125	1·300

NOTE.—Except where + sign is attached, the water-gauges are all depressions.

Figs. 2808, 2809, indicate the positions of the water-gauges.

2808.

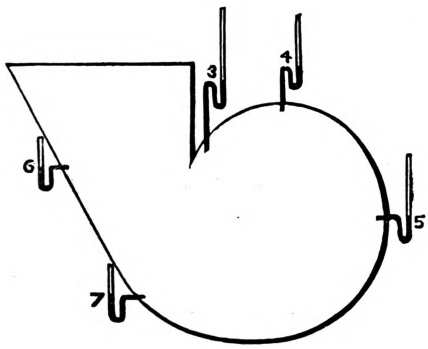

2809.

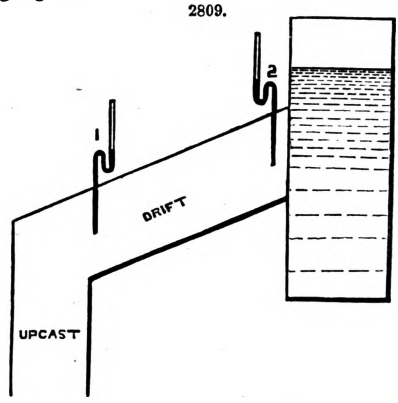

It is especially worthy of notice that the water-gauge indicated at the inlet is greater than the theoretical result obtained by calculation, every adjustment being correct; so that if h be the height of water-gauge, and h^1 the height computed, as due to the velocity of the extremity of the vanes, then $\frac{h}{h^1}$ is always > 1, and this result is different to that obtained from any other machine ventilator; $\frac{h}{h^1}$ in other cases is > 1 rarely $= \cdot 75$. The cause of this is assignable to the pre-

vention of the return of air-currents into the fan, and the utilization of a part of the power carried off by the discharged air.

In the Elswick experiments the value of h^1 being computed from the formula

$$h^1 = \frac{v^2}{2g} \cdot \frac{12}{815} \text{ inches of water column,}$$

where v = velocity of the extremity of the vanes in feet per second, the following results arise, though the shutter was not varied in each case, as it ought to be, to produce the best results;—

No. of Revolutions a minute	Indicated Water-Gauge (h).	Theoretical Water-Gauge (h^1).	$\frac{h}{h^1}$.
40	·600	·530	1·13
50	·925	·830	1·11
60	1·300	1·191	1·09
70	1·875	1·625	1·15

The relation $\frac{h}{h^1}$ is generally 1·25, and it has been proved by M. Guibal as great as 1·60 in the case of a small volume of air, and the shutter nearly at its lowest. The value of $\frac{h}{h^1}$, if calculated from observations taken in various positions of the shutter, no alteration being made in the pressure of steam, nor in the opening of the regulator-valve, and multiplied by the number of revolutions in each case, say $R\frac{h}{h^1}$, is an indication of the best position of the shutter when such product gives the highest result, for it shows that the minimum resistance is offered to the fan at the same time that a maximum water-gauge is obtained.

It is upon this principle that the position of the shutter can be experimentally tried, for the production of the best economical effect.

The consumption of coals at one boiler, arranged to work this fan, was for twenty-four hours taken over a fortnight, 2 tons 16 cwt., the average speed of the fan being forty revolutions a minute, day and night. This is found to yield sufficient air for the present workings, the quantity passing through the mine being nearly 40,000 cub. ft. a minute. The indicated steam-pressure at the boiler is 35 lbs. to the square inch, the water-gauge at bank near the inlet is ·70 in., and underground ·70 in. (at higher speeds there is a greater depression at bank than underground) the seam being very low, the return air-courses are of small area, and the upcast is a 11-ft. diameter shaft, used for ventilation only. No engineman is required, one of the firemen being instructed to attend to the requisite oiling of the bearings. In some cases the pumping engineman might take the engine in charge; the simple arrangement of all the parts offers the least possible risk of any of them getting out of order.

In order to test the capabilities of the ventilator, the experiments above tabulated were made; and it will be seen, from the calculated useful effect, how much superior are the results obtained to those of previous machines.

We add an account of the performance of the ventilating fan at the Hemingfield Pits of the Elsecar Colliery, by J. J. Atkinson.

In connection with the workings or mine ventilated by this fan, at the Hemingfield Pits, there are two downcast shafts, each 468 ft. in depth. One of these is used as a winding shaft, and is elliptical in section, its transverse diameter being 10 ft., and its conjugate diameter 9 ft.; the other downcast shaft is circular in section, and 10 ft. in diameter, but has three lifts of pumps in it; being the engine-pit.

There are also two upcast shafts, employed exclusively for ventilation; they are both circular in section, the one being 9 ft., and the other 7 ft. in diameter. These two shafts are, near the surface, brought into one, which opens into the central part of one side of the fan.

The downcast shafts are situated at a distance of about 530 yds. to the dip (of the strata) from the upcast shafts; the dip being about 1 in 11, or 3¼ in. a yard.

The workings ventilated by the fan extend about 726 yds. in one direction, and 770 yds. in the other, on the level course of the strata, and embrace about 136 acres.

Description of the Fan.—Diameter, outside of the extremities of the vanes, 22 ft. 8 in.; diameter, outside of the rim, 22 ft. The extremities of the vanes project 10 in. beyond the rim of the fan. Diameter of the fan, on the inside of the rim, 16 ft. 10 in.; width of the vanes, 5 ft.; depth of the same, 3 ft.

The vanes are stated to be fixed so as to form an angle of 45° with a line drawn to them from the centre of the fan. This particular angle, it was stated, had been found to give the best results, by special experiments made for the purpose of finding the best angle for the vanes.

There are twenty-six vanes in the fan, and it has seven arms, to which the rim is attached.

The vanes are not curved, but quite straight.

Description of the Engine.—The fan is driven by a steam-engine, having a vertical cylinder, and a connecting-rod attached to a crank at the extremity of the main shaft of the fan, so that the fan makes a revolution for each double stroke of the engine.

The engine cylinder is 22 in. in diameter.

The length of the stroke of the engine is also 22 in.

The engine is worked by means of three boilers (cylindrical, with hemispherical ends, and having wheel flues), each of which is 30 ft. long, over all, and 5 ft. in diameter. All the three boilers were at work when the experiments were made on the 3rd of October; but it was stated that two of these boilers were ordinarily sufficient to supply steam for driving the fan.

The pressure of the steam during the experiments was 43 lbs. the square inch; but 40 lbs. a square inch was stated to be the ordinary working pressure, that is, the pressure on the boilers.

The average quantity of air circulating in the mine, under the ordinary working of the fan, was stated to be 88,000 cub. ft. a minute, with a water-gauge of 0·5 to 0·6 in. at the fan, which includes the shaft resistances.

The average number of strokes of the engine, during the ordinary working of the fan, was stated to be sixty a minute, and the coals consumed 6½ tons in twenty-four hours, or 10⅓ lbs. a minute. Near to the principal fan an auxiliary fan is erected, to be employed only in the event of the larger fan being stopped for repairs, or from any other cause.

This small fan has an outside diameter of only 14 ft.

2810.

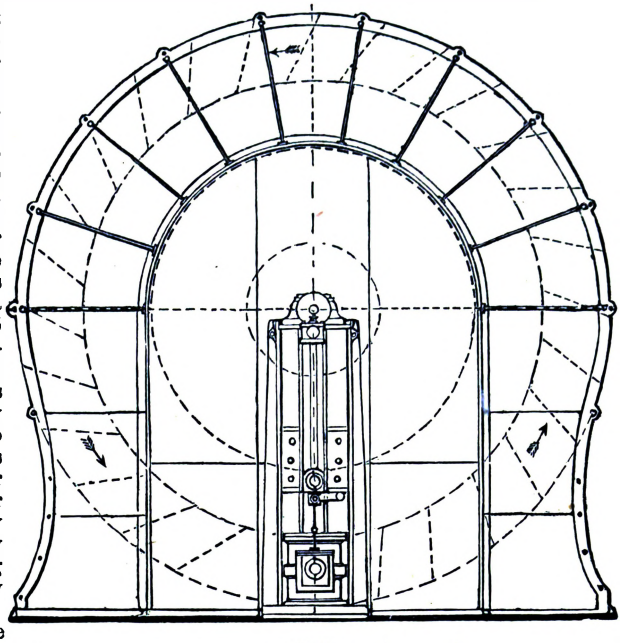

Fig. 2810 is a side elevation, and Fig. 2811 a front view of the fan at Simonwood.

2811.

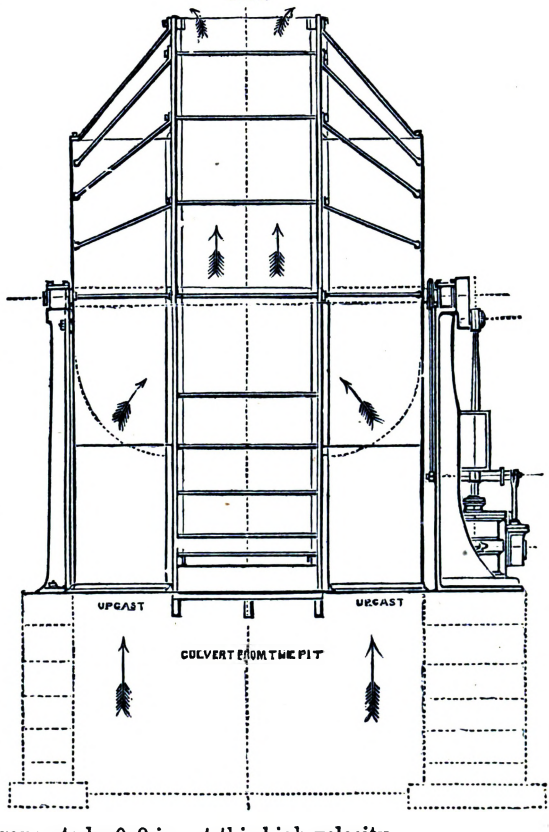

The air was only admitted on one side of the fan at the Hemingfield Pit; but there is a fan of a similar description at the Simonwood Pit of the Elsecar Colliery, having two air-inlets, one on each side, by means of external iron casings, which render it somewhat more costly.

The following is an account of the experiments and observations made on the 3rd October, 1861;—

	Top.	Bottom.
Temperatures of the downcast shafts	54°	54¼°
Temperatures of the upcast shafts ..	..	60½°

The air might be considered as being saturated with vapour at the surface, and also in the returns, there being a difference of only half a degree between the wet and dry bulbs of the *hygrometer*.

There are five separate return airways leading into the bottoms of the two upcast shafts, the dimensions of which are given on next page, as taken at the points where the air was measured.

It was intended to have made an experiment with the fan working at seventy revolutions a minute, but owing to some slight defect in the fan, this velocity could only be maintained for a very short time, without endangering its breakage; there was consequently only sufficient time to observe the water-gauge to be 0·9 in., at this high velocity.

About sixty revolutions a minute appeared to be the highest speed at which the fan could be worked with safety.

			Dimensions and Areas of the Five Return Air-ways, at the parts where the Currents of Air were measured.					
			No. 1.	No. 2.	No. 3.	No. 4.	No. 5.	
Dimensions of the returns			ft. in. ft. in. 8 5 by 5 8	ft. in. ft. in. 8 2 by 5 10	ft. in. ft. in. 6 5 by 5 6	ft. in. ft. in. 8 9 by 5 11	ft. in. ft. in. 9 5 by 6 1	
Areas of the returns			sq. ft. 47·7	sq. ft. 47·64	sq. ft. 35·29	sq. ft. 51·77	sq. ft. 57·28	
Formulæ applying to the anemometers. No. XIV. $V = R + 49{\cdot}32$. No. XV. $V = 1{\cdot}03113.\ R + 27{\cdot}5$. Where V = velocity of air, and R = revolutions of anemometer a minute.			The currents of air in Nos. 1, 2, and 3 returns were measured with No. XIV. anemometer.			The currents of air in Nos. 4 and 5 air-ways were measured by No. XV. anemometer		
No. of Experiments.		Inches of Water-Gauge.	Revolutions of Fan a minute.					
	Natural ventilation	0·00	0·00	35	0	51	40	0	Revolutions of anemometer a minute.
	Velocities of wind .	..	..	84·32	40*	100·32	68·75	20*	
	Cub. ft. of air a min.	..	..	4,022	1,906*	3,540	3,559	1,146*	Cubic feet a minute, 14,173.
	Fan working	0·8	60	132	350	382	350	300	Revolutions of anemometer a minute.
	Velocities of wind .	..	..	181·32	339·32	431·32	388·4	336·84	
	Cub. ft. of air a min.	..	..	8,649	19,023	15,221	20,107	19,294	82,294 cubic feet of air a minute.
	Fan working	0·7	60	85	320	310	330	295	
	Velocities of wind .	..	..	134·32	369·32	359·32	367·77	331·68	
	Cub. ft. of air a min.	..	..	6,407	17,594	12,680	19,039	18,998	74,718 cubic feet of air a minute.

No. 2 experiment was made immediately the pit stopped working; and No. 3, not until a few hours after it had stopped. The quantities marked * are only estimated, as the *anemometers* did not move with the currents.

After this, with the view of ascertaining the amount of water-gauge which the fan was capable of overcoming, the top of the upcast (above where the two shafts were confined to a single channel) was contracted by means of a pair of folding-doors, and the following experiments were made;—

No. of Expts. — Inch.

4.—In the ordinary working of the fan, at sixty revolutions a minute, with the top of the upcast open, the water-gauge was observed to be .. .. .. 0·6

5.—With the fan making sixty revolutions a minute, and one-half of the top of the upcast closed, by means of one of the folding-doors, the water-gauge was still about .. .. 0·6

6.—With the fan making sixty revolutions a minute, and one of the folding-doors closed, and the other at an angle of 45°, or half closed, the water-gauge was .. .. 0·7

7.—With the fan making sixty revolutions a minute, while the ventilation of the mine was entirely suspended by closing off the top of the upcast by means of the two folding-doors, the water-gauge was only .. .. 0·8

8.—In a previous trial, with the shafts all open, and the fan making seventy revolutions a minute, during a very short time, the water-gauge was observed, as already stated, at .. .. 0·9

The ventilating pressure arising from the air in the ascending parts of its route being of less density than that in the descending parts (owing to an increase of temperature, or of the quantity of vapour in the air), is not only generated, but also expended, in the mine, on overcoming the resistances offered by the shafts and air-ways of the mine, and consequently does not operate upon or influence a water-gauge connecting the outer atmosphere with the fan at the top of the upcast shaft—the place where the water-gauge was ascertained—so that this pressure, which gives rise to the natural ventilation, is not shown by the water-gauge, although, in all the experiments, it is a force operating in conjunction with the additional force created by the fan; the actual power given out by the fan is simply that which is due to the pressure created by it, and is indicated by the water-gauge, taken in connection with the actual quantity of air observed to be circulating at the time.

The remaining, or natural, pressure, not shown by the water-gauge, but arising from the temperature and vapour rendering the air of less density in the ascending than in the descending parts of its route, may be regarded as being sensibly constant; and, although not shown by a water-gauge placed at the fan, near the top of the upcast shaft, owing to its being expended before reaching that point, would operate equally in favour or aid of a furnace or of any other ventilating power that might be employed at the same mine, in lieu of the fan, and ought, therefore, to be neglected in calculating the power due to the fan.

Neglecting, therefore, this source of natural ventilation, the real power given out by the fan, and utilized in the production of ventilation, is, by No. 3 experiment—

$$\frac{74718 \times 0{\cdot}7 \times 5{\cdot}2}{33000} = 8{\cdot}24 \text{ horse-power,}$$

where 5·2 is taken as the pressure in lbs. the square foot, due to 1 in. of water-column.

By No. 2 experiment, on the same principles, the fan gives out, as utilized,

$$\frac{82294 \times 0{\cdot}8 \times 5{\cdot}2}{33000} = 10{\cdot}374 \text{ horse-power.}$$

Now, if we presume that, at the time of making the second experiment, just alluded to, the boiler fires were consuming the ordinary working quantity of 6½ tons of coals in twenty-four hours, or 606⅔ lbs. an hour, we have a consumption of $\frac{2240 \times 6\frac{1}{2}}{24 \times 10{\cdot}374} = 58{\cdot}48$ lbs. a horse-power, actually utilized, in an hour.

In cases where furnaces are employed to produce ventilation, the consumption of coals a horse-power really utilized in the production of ventilation varies to a great extent, under different conditions as to depth and sizes of shafts, and of air-ways, and as to the relative state of dryness or dampness of the walls or brattice of the shafts; being in some instances much greater, and in others materially less, than the amount just stated as being due to the fan, in this instance.

The following account of the consumption of coals a horse-power utilized each hour by different ventilating furnaces, in use in different collieries, is extracted from page 143 of vol. vi. of the Transactions of the Institution of M. E.;—

No.	Names of Collieries.	Depth of Upcast Column in lineal feet.	Coals consumed per Horse-power utilized per hour.
			lbs.
1	Thornley Five Quarter Seam	556	85·4
2	Thornley Hutton Seam	868	162·4
3	Walker	960	30·5
4	Castle Eden	1038	29·1
5	South Hetton	1212	27·2
6	Wearmouth	1800	29·5
	Averages	1072⅓	60·7

It may, however, be remarked that a furnace would have operated under very disadvantageous circumstances with an upcast shaft like that of the Hemingfield Pit at Elsecar Colliery, owing to its being no more than 360 ft., or 60 fathoms, in depth.

Under such a condition, in order to have got the same amount of water-gauge, and consequently the same amount of air as was yielded by the fan in No. 3 experiment—the pressure indicated by the water-gauge being superimposed upon the naturally existing ventilating pressure—an average upcast temperature of 152·8° would have been required, as will appear from the following considerations.

The head of air-column taken at 54° and 30 in. of mercury, due to the natural difference between the temperature of the air in the downcast and that of the air in the upcast shafts, taken at 54° and 60½° respectively, would be $\frac{60{\cdot}5 - 54}{459 + 60{\cdot}5} \times 360 = 4{\cdot}5$ ft.

But since the temperature of 60·5° was that of the return air as it reached the bottom of the upcasts, and since there would be a little cooling from the expansion of the air as it ascended the upcast shaft, it is probable that the average temperature of the upcast column was slightly less than 60·5°, and in order to allow for this, in lieu of taking 4·5 ft., only 4·16 ft. of air-column will be assumed as the ventilating pressure arising from the natural difference of the temperatures prevailing in the downcast and upcast shafts respectively.

But, taking the weight of a cubic foot of air, saturated with vapour at 54°, and under a pressure of 30 in. of mercury, at ·07704 lb., there would be required, to give a pressure equal to that represented by 0·8 in. of water-column, a further column of such air and vapour of

$$\frac{{\cdot}8 \times 5{\cdot}193\frac{2}{3}}{{\cdot}07704} = 54 \text{ ft. in height.}$$

Making a total height of such air-column (including that due to natural causes) of 54 + 4·16 = 58·16 ft., and the average prevailing temperature, required in the upcast shaft, in order to give such a pressure, will be found from the formula $T = \frac{459\,H + d\,t}{d - H}$.

Where T = the average temperature of the upcast column.
H = the height, in feet, of air-column, arising from the difference of shaft temperatures = 58·16 ft.
d = the depth of the upcast shaft = 360 ft.
t = the temperature of the downcast shaft, and of the air-column H, or 54°.

From whence $T = \frac{459 \times 58{\cdot}16 + 360 \times 54}{360 - 58{\cdot}16} = 152{\cdot}8°$, as above stated.

But, taking the temperature of the return air at 60·5°, and the barometer at 30 in. of mercury (the return air being saturated with vapour), we have

30·000 in. of mercury as the barometrical pressure,
and 0·527 ,, ,, as the tension of the vapour; leaving
29·473 ,, ,, as the tension of the air.

Now the weight of a cubic foot of air, at 60·5°, and under 29·473 in. of mercury, is

$$\frac{1{\cdot}32529 \times 29{\cdot}473}{459 + 605^\circ} = {\cdot}07519 \text{ lb.}$$

The weight of a cubic foot of vapour of water, at the same temperature, and under a tension or pressure of 0·527 in. of mercury, is $\frac{{\cdot}07519 \times {\cdot}527}{29{\cdot}473} \times {\cdot}622 = {\cdot}000833$ lb.

And taking the capacity of water, for heat, at unity, that of air and vapour of water, under a constant pressure, are ·238° and ·475° respectively; so that the capacity for heat, of the returns, passing over the furnace each minute, is equivalent to that of

$$\begin{aligned} {\cdot}07519 \times 82294 \times {\cdot}238 &= 1472{\cdot}67 \text{ lbs. of water.} \\ \text{and } {\cdot}000833 \times 82294 \times {\cdot}475 &= \quad 32{\cdot}56 \quad \text{,,} \quad \text{,,} \\ \text{or, together, to } &1505{\cdot}23 \quad \text{,,} \quad \text{,,} \end{aligned}$$

And admitting that so much of each pound of coal, applied to the furnace, as is actually burnt, yields 13,000 calories or units of heat, the coals required to elevate the temperature of 82,294 cub. ft. of such saturated air from 60·5° to 152·8°, or through the difference of (152·8 − 60·5 =) 92·3°, would be $\frac{1505{\cdot}23 \times 92{\cdot}3^\circ}{13000} = 10{\cdot}687$ lbs.

So that, if even there was no loss of temperature by cooling in the furnace drift and upcast shafts, this would be the necessary consumption of coal by a furnace, to do the same work as the fan, if employed to supersede it, in the ventilation of the Hemingfield Pit at Elsecar Colliery.

But if we presume that one-third of the heat given out by the furnace had been lost by cooling, when the air reached that part of the upcast shaft at which the average temperature prevailed, then the consumption of coals by a furnace, to have given a ventilation of 82,294 cub. ft. of air a minute, at a pressure of ·8 in. of water-gauge (in addition to the natural ventilating pressure), would in this particular case have been $1\frac{1}{2} \times 10{\cdot}687 = 16{\cdot}0305$ lbs. a minute, or $\frac{16{\cdot}0305 \times 60 \times 24}{2240} = 10{\cdot}35$ tons in twenty-four hours, in lieu of only 6·5 tons, used in driving the fan, to produce the same amount of ventilation.

This last result gives for a furnace, in so shallow a shaft, a consumption of 92·71 lbs. of coal a horse-power utilized an hour; compared with one of 58·48 lbs. used for driving the fan, and, if even there were no loss of heat by cooling, in the case of the furnace, the consumption of coal would be 61·81 lbs., compared with 58·48 lbs. a horse-power utilized an hour, as used for the production of ventilation by the fan.

No indicator, friction-brake, or other means, were used to ascertain the actual power of the engine employed to drive the fan; but, as has been stated, the pressure of the steam in the boilers was 43 lbs. a square inch, and the diameter of the cylinder and the length of the stroke were each 22 in.; and as the engine made sixty double strokes a minute when 82,294 cub. ft. of air a minute circulated, it follows that if we allow one-fourth of the pressure of the steam to have been used or lost in overcoming the friction of the machinery connected with the engine and the fan, by condensation, &c., we have $\frac{22^2 \times {\cdot}7854 \times \frac{3}{4} \times 43 \times \frac{22 \times 2}{12}}{33000} = 81{\cdot}728$ horse-power, as the working power of the engine. But we have already seen that only 10·374 horse-power was actually realized, in the ventilation produced, which is only 12·69 per cent. of the power, so calculated, for the engine, showing a loss of 87·31 per cent. of that power.

This result is what might have been anticipated from a consumption of so much as 58·48 lbs. of coals a horse-power utilized an hour; the consumption of coals, on the power of the engine, as above calculated, being only 7·42 lbs. a horse-power an hour.

It appears from these experiments that the Elsecar fan is capable of circulating large quantities of air at a low water-gauge, such as is due to the existence, in the mine, of numerous roomy and short air-ways; and that it is not well adapted for overcoming heavy drags or resistances, such as occur where the air-ways are few in number, limited in sectional area, or very long; inasmuch as it was found impracticable to obtain so much as an inch of water-pressure, from the use of the fan, even when the mine was entirely shut off, and no air allowed to circulate in it; beyond any small amount of leakage that might prevail at the folding-doors, over the top of the upcast shaft.

Cochrane observes that this fan appears only to give a utilization of 12·69 per cent. of the power employed, compared with one of about 60 per cent., alleged to be obtainable from machines similar to those known as Struvé's, Fabry's, and possibly one or two other kinds. It has, however, the recommendation of being moderate in first cost, and so simple in construction as to be little liable to get out of repair; and, as the class of coals used are of no very great value, on many collieries, its waste of power in such cases may not stand greatly in the way of its adoption, where the nature of the mine happens to be one of a character to suit its application.

Ventilator.—The name of ventilator is applied, in general terms, to all of those contrivances designed to renew the air in a given space; but in Mechanics the name is more particularly applied to those which operate by centrifugal force. These instruments consist of a certain number of fans, either straight or curved, fixed upon an axis, and revolving between the sides or cheeks of a drum, the circumference of which may be quite open or partially closed. There are two kinds of these ventilators—those which *suck* the air through pipes opening into the cheeks of the drum on a level with the axis, and eject it into the atmosphere with a feeble velocity through all the

points of the circumference, and those which suck the surrounding air through orifices in the cheeks on a level with the axis, and *blow* it through a pipe communicating with the circumference of the drum. Both of these methods may be combined in one ventilator.

Sucking Ventilators.—Figs. 2812, 2813, represent a sucking ventilator with curved fans. The fans are fixed upon a disc A A, Fig. 2812, perpendicularly with the axis, and revolving with it. The cheek B B has in its centre a circular orifice, to which is fitted a pipe C C, through which the air is sucked. Fig. 2813 shows the arrangement of the curved fans. The rotary motion is com-

2812.

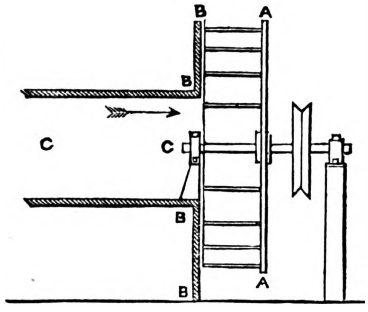

2813.

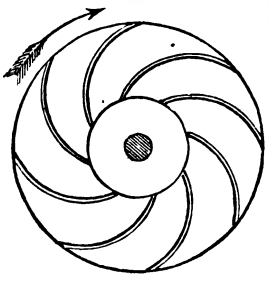

municated to the axis by means of the pulley p. The way in which the apparatus works will be apprehended without difficulty. As the rotation takes place in the direction of the convexity of the fans, as shown by the arrow in Fig. 2813, there tends to be formed on the concave side a partial vacuum, into which the air of the pipe C C rushes. This air is thrown outwards towards the circumference by the centrifugal force acting upon it, and issues by the canals formed by the fans in a direction nearly opposite to that in which the fans rotate; so that the absolute velocity of egress is very feeble.

The motion of the air in a sucking ventilator gives rise to complex phenomena, and the exact theory of this apparatus has yet to be found. We will, however, give an approximative theory, in order summarily to appreciate its effects. Let P_0 be the pressure in the pipe C C, P the pressure at the point where the air enters between the fans, and v the velocity which the air assumes in virtue of this difference of pressure. Calling the temperature of the air t, and its coefficient of expansion a, we have, according to Bernoulli's theorem,

$$v^2 = 2\,g \times 18304\,(1 + a\,t) \log. \frac{P_0}{P}. \qquad [1]$$

This velocity is in the direction of the radius, or perpendicularly to the sides of the pipe C C. Let u_0 be the velocity of the fans at the inner circumference; this velocity is perpendicular to v. If, therefore, we denote the relative velocity of the ingress of the air into the canals formed by the fans, by w_0, this third velocity will be the hypothenuse of a rectangular triangle having as its sides u_0 and v. We have, therefore,

$$w_0^2 = v^2 + u_0^2. \qquad [2]$$

Let w be the relative velocity of the air at the opposite end of these same canals, that is, at the outer circumference of the fans; let u be the velocity of the fans at this point. The pressure at the outer circumference being the pressure of the atmosphere P_a, we have, by applying the principle of the effect of the work for the relative motion,

$$w^2 = w_0^2 + u^2 - u_0^2 + 18304\,(1 + a\,t) \log. \frac{P}{P_a}\,2\,g. \qquad [3]$$

Let α be the angle of the velocities u_0 and w_0; we thus have

$$\tan.\,\alpha = \frac{v}{u_0}. \qquad [4]$$

Let β be the angle which the last element of the fans makes with the outer circumference, and v' the absolute velocity of the egress of the air; this velocity v' will be the resultant of the relative velocity w and the velocity u taken in the contrary direction. We thus have

$$v'^2 = u^2 + w^2 - 2\,u\,w\,\cos.\,\beta. \qquad [5]$$

Let W be the weight of the air which flows off in a second; S the distance between two consecutive fans measured on the outer circumference, and e the thickness of the ventilator, or distance between the disc A A and the cheeks B B. The section of one of the canals will be e S sin. β; and if we suppose all the currents of air moving with the same velocity w, the volume which passes off in a second through one of these canals will be e S sin. $\beta \times w$. This air being at the atmospheric pressure, if Π_a denote the weight of the cubic mètre of air at this pressure and at the temperature t, the weight of air flowing off through one of these canals in a second will be $\Pi_a\,e$ S sin. $\beta \times w$. And consequently, if there are n canals, we shall have

$$W = n\,\Pi_a\,e\,S\,\sin.\,\beta\,w,$$

or, remarking that n S expresses the outer circumference of the fans, the value of which is $2\,\pi\,r$, if r denote the radius of this circumference,

$$W = 2\,\pi\,r\,\Pi_a\,e\,w\,\sin.\,\beta. \qquad [6]$$

Calling the weight of the cubic mètre of air at the pressure P and at the temperature t, Π, and the radius of the inner circumference of the fans or the radius of the pipe C C, r_0, we find

$$W = 2\pi r_0 \Pi e w_0 \sin. a. \qquad [7]$$

The quantities Π_a and Π may be expressed as functions of the pressures and temperatures corresponding, by the formulæ

$$\Pi_a = 1^k \cdot 3 \frac{P_a}{10334 (1 + a t)}. \qquad [8]$$

$$\Pi = 1^k \cdot 3 \frac{P}{10334 (1 + a t)} \qquad [9]$$

Adding member by member the relations [1], [2], and [3], we obtain, after reductions,

$$w^2 = u^2 + 2g \times 18304 (1 + a t) \log. \frac{P_0}{P_a} \qquad [10]$$

which will give the velocity w. Usually the pressures P_0 and P_a differ but little from each other; their relation is very near unity, so that w will differ but little from u, that is, *the relative velocity of egress of the air is sensibly equal to the velocity of the outer extremity of the fans*, a result which is confirmed by experience.

The velocity w being given, equation [6] will give P. If we add equations [1] and [2], we have

$$w_0^2 = w_0^2 + 2g \times 18304 (1 + a t) \log. \frac{P_0}{P}. \qquad [11]$$

Again, equation [7], by substituting the value of Π [9], becomes

$$W = 2\pi r_0 e w_0 \sin. a \times 1 \cdot 3 \frac{P}{10334 (1 + a t)} \qquad [12]$$

The relations [11] and [12] will give the values of the two unknowns w_0 and P. Equation [1] will then give the velocity v; and equation [5] will give the velocity v'. Equation [4] will give a, the angle which the first element or portion of the fan makes with the inner circumference to allow the air to enter the canals without a shock.

The expression of the effective work is $T_u = W \frac{w_0^2}{2g}$.

The motive work T_m is made up of T_u, plus the work corresponding to the absolute velocity of the air at its egress, that is, $W \frac{v'^2}{2g}$, plus again the work T_f, due to the friction of the air against the sides of the canals, and to unavoidable losses. We have, therefore,

$$T_m = W \left(\frac{w_0^2 + v'^2}{2g} \right) + T_f,$$

and, consequently, the expression of the ratio of the effective to the whole work is

$$\frac{T_u}{T_m} = \frac{w_0^2}{w_0^2 + v'^2 + \frac{2g}{W} \times T_f} \qquad [13]$$

It will be seen that the velocity v' should be as small as possible. To obtain this result, as w differs but little from u, it is evident that we must make the angle β as small as possible; that is, the last element or portion of the fan should be as nearly as possible a tangent to the outer circumference.

Losses due to leakage cannot be computed; the friction may be calculated as for a pipe, when the dimensions of the ventilator are known. To this end, as the relative velocity is variable, we may take the mean of the velocities w_0 and w, and substitute it for U in the formula $\phi = \Pi_1 l \chi \beta U^2$, whence $T\phi = \Pi_1 l \chi \beta U^3$, l denoting the developed length of one of the canals, χ the contour of its mean section, β the coefficient 0·000355, and Π_1 a mean between the values Π_a and Π, which enter into the foregoing calculations.

This approximative theory supposes that the currents of air have the same velocity in a given section of the canal; the velocities are, in fact, different. It supposes, too, that the pressure is the same in a given section; this hypothesis is not realized. Behind the fan a partial vacuum is formed, into which the external air rushes, so that there are two currents of air in a given canal at once, one of which is issuing in virtue of centrifugal force, the other of which is entering in virtue of the difference of pressure of which we have spoken above. These complicated phenomena would require a careful experimental study, one that would be both delicate and difficult, and which has never yet been made.

In general, the effective work, or, in other words, the ratio of the useful work effected by the instrument, to the total work expended on it, is very small; it hardly reaches 0·30 in those which have been constructed with the greatest care; and it often descends as low as 0·18 and even 0·10, especially when the curved fans are avoided, as frequently happens, in favour of straight fans fixed in the direction of the radii. This small amount of useful work effected by the most carefully constructed ventilators is accounted for by the influence of friction, which assumes a high import-

ance from the fact that the air in the canals possesses great velocity. Another cause is the unequal distribution of the velocity, and the pressure in a given transverse section, and the entrance of air through the outer circumference, spoken of above.

The arrangement of the fans has been varied in many ways, and various shapes have been given to the cheeks or sides of the ventilators; but none of these modifications have produced a better result.

Usually a length of from 1 to 2 mètres is given to the outer diameter; r_0 is made equal to the half of r; the fans are multiplied in proportion as the diameter of the apparatus increases; their number varies generally from 6 to 12. The depth of the fans is a fourth or fifth of the outer diameter. The speed varies from one hundred and twenty up to a thousand revolutions a minute. The rate of speed which gives the best results has yet to be discovered.

Blowing Ventilators.—Fig. 2814 represents a blowing ventilator with flat fans fixed in the direction of the radius. The direction in which the fans revolve is indicated by the arrow These fans are enclosed throughout about three-fourths of their circumference by a drum which prevents the air from escaping; the remaining portion corresponds to a pipe into which the air is driven by the rotation of the fans. We may apply to this kind of ventilator a theory analogous to that which we have explained above for the other kind of ventilator. According to this theory, the fans, instead of being straight, ought to be curved, as shown in Fig. 2815, *a b c*, in order that the air may, on the one hand, enter the canal without shock, and, on the other hand, issue in a direction nearly tangential to the outer circumference. But the small amount of useful work effected by these machines have led constructors to avoid the expensive curved fans; and the straight fans, which have been generally adopted, are fixed in the direction of the radius, or slightly inclined in the direction opposed to that of the rotation.

2814.

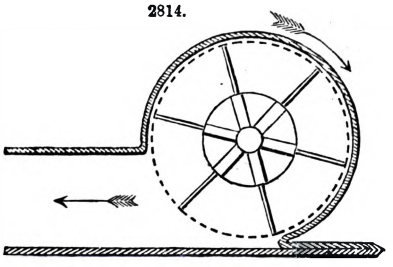

2815.

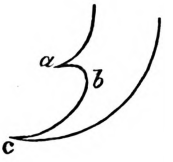

If the central orifice of Fig. 2813, instead of opening into the air, formed the mouth of a pipe communicating with a given space, the ventilator would be at once sucking and blowing. See ADIT. ANEMOMETER. BLOWING MACHINES. BORING. COAL MINING. LAMP, *Safety*. VENTILATION.

FAULTS. FR., *Fente, Fissure;* GER., *Kluft, Gangspatte;* ITAL., *Spostamento;* SPAN., *Dislocacion.* *Faults* are a displacement of strata or veins at a fissure, so that they are not continuous.

See BORING AND BLASTING. FAN.

FEED-PIPE. FR., *Tuyau d'alimentation, Tuyau de refoulement;* GER., *Speiserohr;* ITAL., *Tubo d'alimentazione;* SPAN., *Tubo de alimentacion.*

Feed-pipe Connection for Locomotive Engines, invented by Alexander Allan.—Various constructions of feed-pipe connection between locomotive engines and tenders have been used; but the double ball-and-socket plunger pipes, made of brass, are generally applied, in order to have a continuous metallic connection, allowing of blowing steam through into the tender without injury. These, however, are very expensive, requiring great nicety of fitting and much care in their management, and, in consequence of sand and dirt getting in among the movable parts, they involve a serious outlay for maintenance. In practice it is almost impossible to keep them perfectly tight, while if the joints be too tightly screwed up there is risk of the feed-pipes breaking.

To obviate these defects, and to obtain a continuous metallic connection comparatively inexpensive, and at the same time to present a mechanical combination that should be simple, durable, and efficient, Allan has substituted the connection shown in Figs. 2816, 2817, consisting of a simple brass or copper tube A, coiled in a circle of considerable diameter, so as to have sufficient elasticity to allow for the vertical disturbance due to the unequal deflection of the engine and tender springs, and also for the extreme lateral range required in going round sharp curves, with a minimum strain on the joints. A solid-drawn brass tube is employed, varying from No. 17 to No. 14 wire-gauge in thickness, or ·060 in. to ·085 in., coiled to a circle of 3 ft. to 3½ ft. diameter: see Fig. 2817.

In order to offer less resistance to bending, the tubes are made elliptical in section, about 2½ in. deep by 1½ in. broad: see Fig. 2819. Tubes of circular section 2 in. in diameter, as shown in Fig. 2820, have also been used, but they are more rigid than the elliptical tubes. Experiments were made to ascertain the amount of force necessary to stretch and compress the coiled tube, and also to deflect it vertically and laterally through the extreme range required in practice; and the results show that the elliptical tube has the advantage in elasticity, the first inch of deflection requiring only about 30 lbs. pressure, while a total pressure of from 90 to 100 lbs. is sufficient to produce the extreme deflection of about 3 inches in any direction; up to this pressure there is no permanent set, and consequently no fear of the tube collapsing in any part. The experiments were afterwards extended with the elliptical tube up to 3½ in. movement in any direction, giving a total range of 7 in., up to which the tube may be strained safely; beyond this limit a permanent set is produced. In practice, however, the total range in any direction never exceeds 5 in., or 2½ in. on each side of the central position, leaving a sufficient margin of elasticity to prevent injury to the tube With a thinner tube, or one coiled to a larger circle, an increased range could be obtained if desired.

The connecting tube A is attached to both engine and tender by means of the ordinary screw

and tail-pipe couplings B B, Figs. 2816, 2817, the tail-pipes being brazed upon the circular ends of the tube, as shown in the section, Fig. 2818. It is placed above the axle, and suspended to the foot-plate by short chains C, as shown in Fig. 2816, so that the wheels can be removed without interfering with the feed-pipe connection, and it is less liable to damage should the engine get off the rails than the ordinary ball-and-socket couplings. The connecting tube is placed central in the engine whenever practicable, so that the angular deflection produced in running round curves is reduced to the minimum; but it can be fixed without any practical objection in the usual side position of the feed-pipe, as shown in the plan, Fig. 2817, so as to admit of ready application to existing engines and tenders. Figs. 2816, 2817, show the connection applied to an engine fitted with an injector D for supplying the boiler; and the dotted lines E show the end of the tube when a pump is used.

2816.

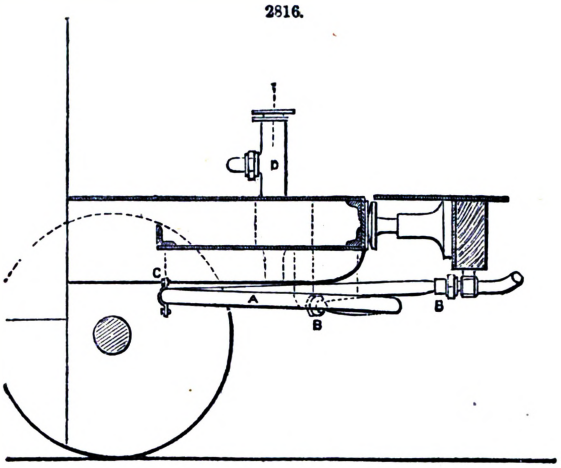

2818.

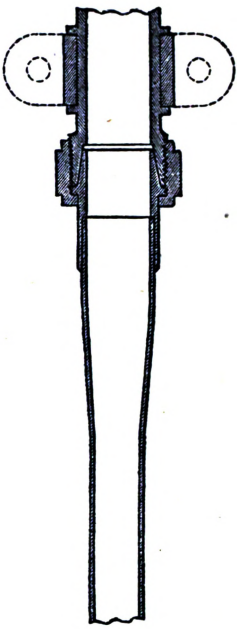

2817.

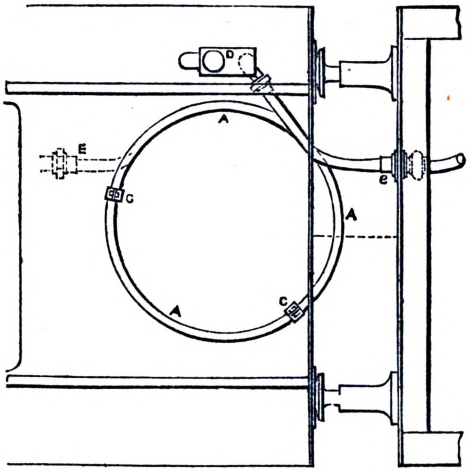

2819.

2820.

This connection has been fitted to a number of locomotives on the Scottish Central Railway, including some large goods engines; and it has been subjected to severe tests during the last twelve months, and has given satisfaction. In the engines on this railway the plan of coupling between the engine and tender, drawing as well as buffing on a heavy laminated spring, allows more movement than is usual, amounting to a play of 2 in. between the engine and tender, and the connecting tube is 6 in. out of the centre; but, even under these conditions, no failure of the connecting tube has occurred. The dimensions of the engine to which it has been longest attached are;—diameter of cylinder, 16 in.; stroke, 20 in.; driving wheel, 6 ft. diameter; steam-pressure in boiler, 130 lbs. a square inch; the boiler was supplied by a No. 9 injector.

FEED-PUMP. Fr., *Pompe d'alimentation;* Ger., *Speisepumpe;* Ital., *Tromba d'alimentazione;* Span., *Bomba de alimentacion.*

See Details of Engines.

FILBOW, or FILBO. Fr., *Boulon à clavette;* Ger., *Gelochter Nasenbolzen;* Ital., *Chiavarda ad occhio;* Span., *Anillo de amarra.*

Any bow or ball, after the fashion of an eye-bolt, with an attached stem, is termed a filbow when either the stem or bow is in use as a guide, swivel, or double swivel. Fig. 2821 shows the eye-bolt of a gland for a stuffing-box, where the stem is made to serve as a guide. In machinery where the *bow* or *ball* is a guide or swivel, Fig. 2822. Fig. 2823 is a shape given to a filbow when this class of eye-bolt is not intended wholly as a permanent fixture.

John Fielden, of Rochdale, the inventor of Fielden's Cast Link Chain, p. 336, properly remarks on this technical term, which is as old as the spinning mule or carding engine, "that although not a

2821.

2822.

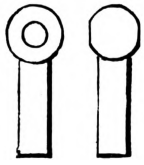

2823.

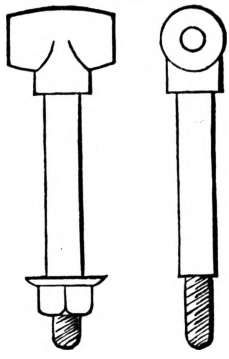

local term, but in use in almost all parts of Great Britain amongst educated engineers and machinists, yet this word, like many others of the same class, has never found its way into any Dictionary."

FILE. Fr., *Lime;* Ger., *Feile;* Ital., *Lima;* Span., *Lima.*

A *file* is a steel instrument having the surface covered with sharp-edged furrows or teeth, used for abrading or smoothing such substances as metals, wood, and so on. A file differs from a *rasp* in having the furrows made by straight cuts of a chisel either single or crossed, while the rasp has coarse single teeth raised by the pyramidal end of a triangular punch. See Hand-Tools.

FILE-CUTTING MACHINE. Fr., *Machine à taille des limes;* Ger., *Feilenhaumaschine;* Ital., *Macchina da tagliar lima;* Span., *Máquina de picar limas.*

It is a remarkable circumstance, says Thomas Greenwood, in the Proceedings of I. of Mech. E., that whilst almost every manual operation in our various manufactures has been either superseded or very materially assisted by the introduction of machinery, the operation of cutting files is still done by hand, and has hitherto been generally considered to be one not admitting of the application of machinery. Several very ingenious machines for the purpose have already been tried, both in this country and in America, but hitherto without any marked success. Large sums have also been expended by some of the leading makers of Sheffield in attempting to introduce file-cutting machines; but the difficulty of the operation, real or imaginary, has been one cause of failure, and another cause has been the very determined opposition on the part of the operatives to the introduction of machinery into any part of the various operations of file-making: indeed, so jealously do the file-cutters guard the art and mystery of their craft, that they do not teach their apprentices how to grind their cutting chisel until they have attained the last year of their legal apprenticeship. The manufacture of files has been kept stationary, instead of advancing and improving like other manufactures, from the mistaken belief on the part of the men that by resisting the introduction of machinery they are preserving their employment. Speaking in 1859, Greenwood observed;—As a further illustration of this mistake it may be mentioned that the tariff of prices for forging files now followed is founded upon the supposition that no improvement has been made in rolling steel in modern times, and that the bars are supplied in the same rude form which was prevalent fifty years ago, thus ignoring the beautiful improvement which has been made in rolling steel; so that the forgers charge the same price for simply drawing down the tang upon a square or round bar of steel for a parallel or equalling file that they do for the entire forging of a half-round taper file-blank of the same length.

Operations much more difficult than cutting files have been performed by machinery in various manufactures; amongst which may be named, as having taken its rise in the Leeds district, the combing of wool, in which, by the manipulation of the machine itself, the long fibres are selected and delivered into one compartment, and the short fibres into another; an operation which at first sight would appear to require an intelligent and discriminating power. Thomas Greenwood truly observes that the actual process of file-cutting is, however, one of the simplest description. It consists in driving a chisel of suitable form and inclination to a small depth into the prepared surface of the blank, and steadily withdrawing it again; and cutting a file is merely a repetition of this operation. The difficulties to be surmounted are—to present the blank perfectly parallel to the cutting edge of the chisel; to withdraw the chisel from the incision made in the blank without damaging the edge of the newly-raised tooth; to prevent a rebound of the chisel after the blow which drives it into the blank, and before the next blow is struck; to give a uniform traversing motion to the blank, ensuring regularity in the teeth; to proportion the intensity of the blow to the varying width of the file, so as to give a uniform depth of cut; and to perform these operations at such a speed as to make them commercially profitable. In most of the attempts that have been made to accomplish this process by machinery, the idea has been to construct an iron arm and hand to hold the chisel, and an iron hammer to strike the blow; and by this means to imitate as nearly as possible the operation of cutting by hand. The difference in the material used inevitably led to failure; the flexible, and, to some extent, non-elastic nature of the fingers, wrist, and arm, enabled the man to hold the chisel, strike the blow, and then lift the chisel from the tooth, without vibration; not so when the iron hand and hammer are tried to perform the same operation; the vibration consequent upon the material employed frequently caused irregularity in the work, and a ragged and uneven edge on the tooth. The slow speed at which these machines were worked rendered them unable to compete with hand-labour.

In the machine, Figs. 2824 to 2826, the above objections have been nearly, if not altogether, obviated by an ingenious modification in the mode of action. This machine is th invention of M. Bernot, of Paris, and has been already working successfully for some time both in France and Belgium. The blow is given by the pressure of a flat steel spring pressing upon the top of a vertical slide, at the lower end of which the chisel is firmly fixed; the slide is actuated by a cam making about one thousand revolutions a minute, and the chisel consequently strikes that number of blows a minute, thus obviating the vibration consequent upon the blow with an iron mounted hammer, and moving at such a speed as to render any vibration impossible.

The accompanying Figs. 2824 to 2834, show the various parts of a machine for cutting 18-in. bastard files, which is nearly the largest size required; for the smaller files, machines smaller in proportion are employed, down to one-half the size of that shown in the drawings. Fig. 2824 is a front elevation of the machine; Fig. 2825, a vertical section taken at right angles to Fig. 2824; and Fig. 2826, a plan. In the front elevation, Fig. 2824, some of the parts at the top of the machine which are behind the main framing are shown in front of it for the sake of distinctness, and a portion of the frame at the top is omitted for the same purpose; but the proper position of these parts is fully seen by a comparison with the vertical section and plan, Figs. 2825, 2826.

The main shaft A, Figs. 2824 to 2826, is mounted near the top of the framing, and is driven by a clutch that engages with a similar clutch on the boss of the driving pulley and fly-wheel B, which, when the clutch is out of gear, run loose upon the shaft; the clutch is moved by a hand-lever with suitable notches to hold it in and out of gear, as shown in the plan, Fig. 2826. The vertical slide C is lifted by a cam on the main shaft, and slides between adjustable V guides fixed in the frame of the machine, as shown in the plan, Fig. 2826, and the enlarged plan, Fig. 2834. The cutting chisel D, Fig. 2825, shown black in the drawings, is held in a socket in the bottom of the vertical slide C, and securely fixed by a set screw, as shown enlarged in Figs. 2833, 2834. The blow is given by means of the horizontal flat spring E, Figs. 2825, 2826, which is fixed at the outer end to a

2824.

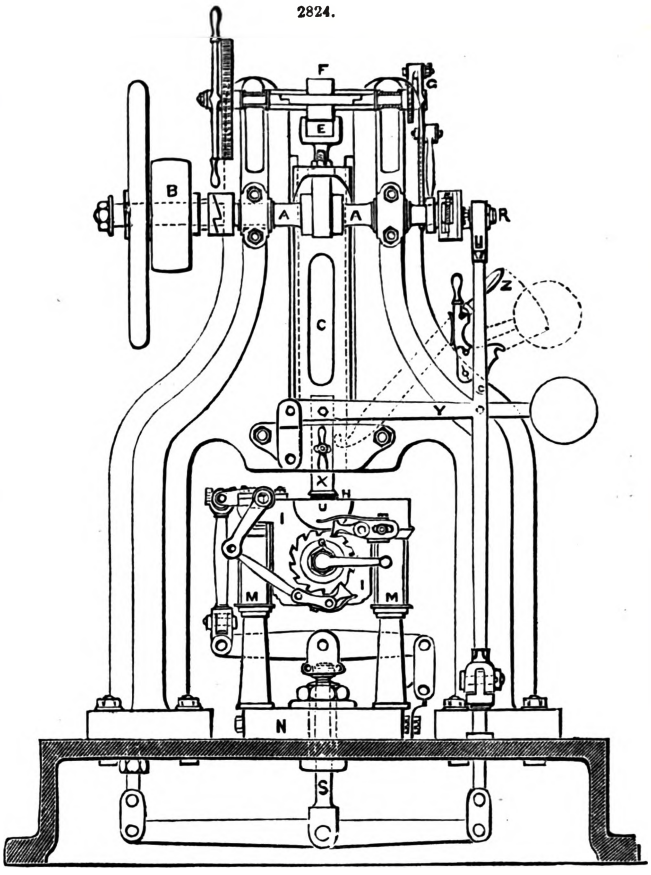

2825.

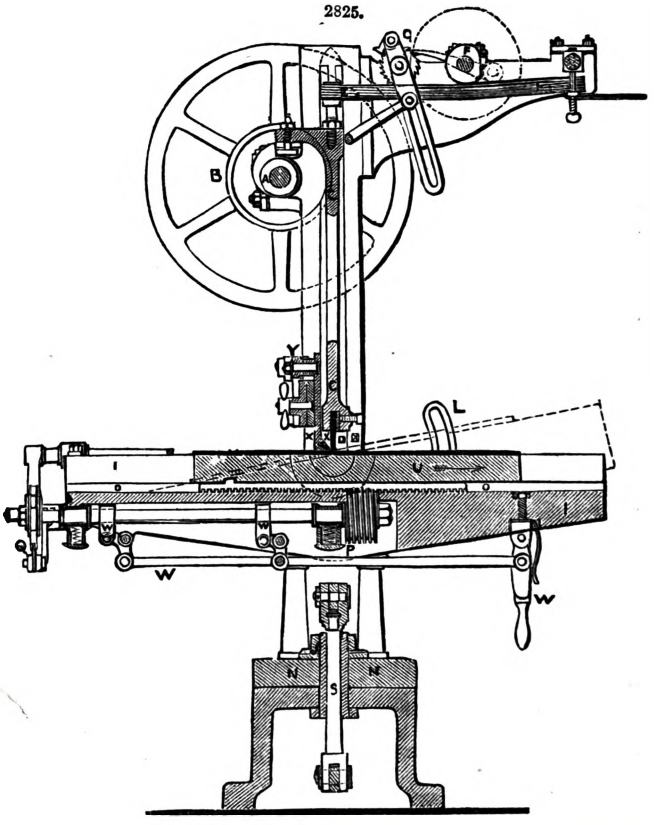

2826.

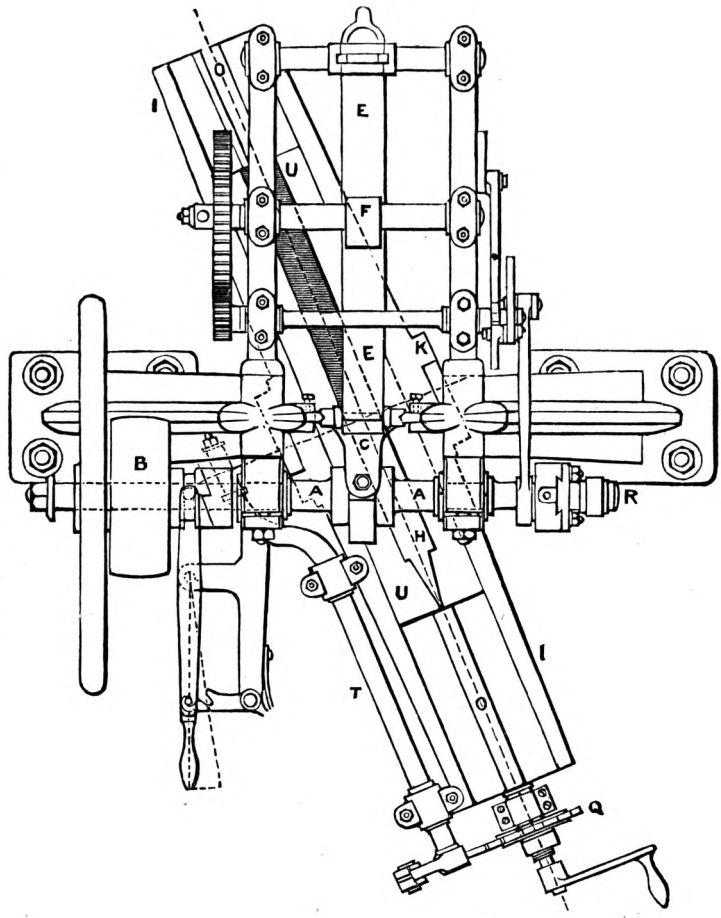

2827

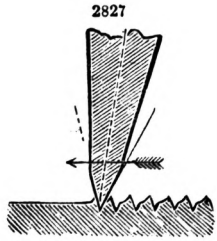

2828.

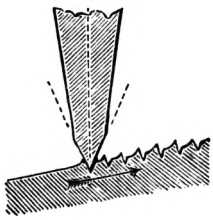

2829.

2830.

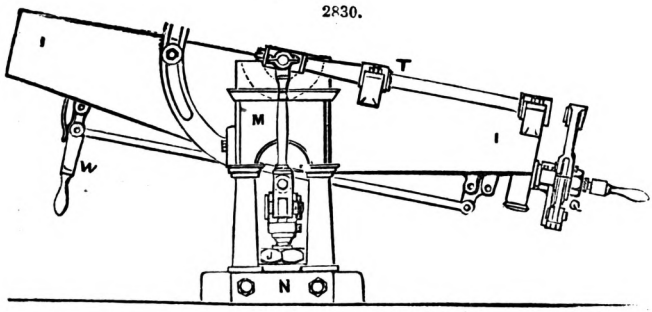

2831.

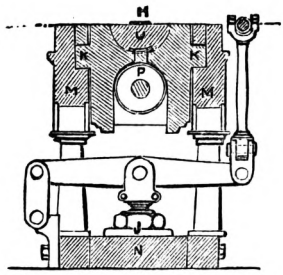

2832.

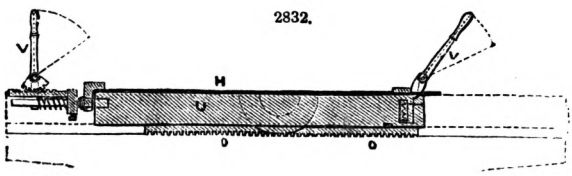

2833.

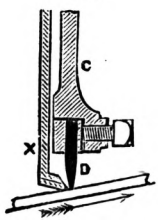

2834.

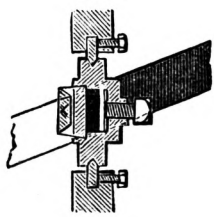

rocking shaft carried in a bracket at the back of the main frame; this bracket also carries the pressure cam F pressing upon the middle of the spring and forming the fulcrum against which the spring is bent when the slide C is lifted by the cam on the shaft A, the spring being always in contact with the head of the slide C. The pressure of the spring and consequent depth of cut of the chisel is regulated by an adjusting screw at the outer end of the spring, Fig. 2825; and in the case of cutting a parallel file this pressure is kept the same throughout. But in cutting a taper file the pressure is varied in the same proportion as the breadth of the file varies, so as to maintain an equal depth of cut throughout, by means of the pressure cam F being made to rotate during the traverse of the file; and the radius of the cam is made to increase and diminish in the proportion of the breadth of the file, thus varying the amount of deflection of the spring at each cut in the required proportion. The rotation of the cam is effected by means of the ratchet-wheel G, Fig. 2825, worked by an eccentric upon the main shaft A, Figs. 2824 and 2826, and thrown out of gear when a parallel file is being cut.

The file-blank H to be cut, shown black in Figs. 2824, 2825, is fixed upon a compound bed I, which admits of adjustment to any obliquity horizontally, as shown in the plan, Fig. 2826, by turning upon a strong centre pivot J in the bottom frame; and to any inclination vertically, as shown in Fig. 2830, by rocking upon the centre bearing K, shown in the transverse section, Fig. 2831, which consists of a semicircular trunnion on each side of the file-bed, as shown by the dotted lines in Fig. 2830. The file-bed is adjusted and secured at any required inclination by means of the circular arc L, Fig. 2830, fixed to one of the pedestals M in which the file-bed is carried. These two movements of the bed give the required obliquity of the chisel-cut across the face of the file, and the inclination of the chisel to the plane of the file-face; the chisel itself remaining always vertical. The trunnions K of the file-bed are recessed into the two pedestals M, each supported by two pillars which are connected at the base by a turning plate N, turning on the centre pivot J. The upper end of this pivot is provided with a nut and washer to hold the turning plate N and secure the file-bed I in the required oblique position.

The horizontal movement or traverse of the file between each cut of the chisel is given by means of a rack which slides in a longitudinal groove O in the file-bed I, Figs. 2825, 2826. This rack is advanced the required distance between each stroke of the chisel by the worm P, Fig. 2825, the shaft of which has a ratchet-wheel Q fixed on the outer end, as shown in Fig. 2824, which is worked through a series of connecting-rods and levers from the crank-pin R upon the end of the main shaft A, Figs. 2824 and 2826. In order to provide for the double motion of adjustment of the file-bed I, with an inclination both vertically and horizontally, this feed-motion is communicated through a vertical spindle S, Fig. 2825, passing up freely through the tubular centre pivot J upon which the file-bed turns; the head of the spindle S is connected by a horizontal lever and connecting-rod with swivel-joints to the cranked rocking shaft T, which terminates at the centre line of the trunnions K on which the file-bed rocks, as shown in the plan, Fig. 2826, and side elevation, Fig. 2830; the other end of the rocking shaft T carries a pawl that works the ratchet-wheel Q on the shaft of the worm P, Fig. 2824. The whole of this set of levers is carried by the turning plate N of the file-bed, and turns freely upon the head of the centre spindle S without interfering with their action in driving the worm P.

The upper side of the file-bed I is cut out in a semicircle, as shown in Figs. 2824 and 2831; and a movable semicircular slide U, Fig. 2825, which is of sufficient length to carry the file, is fitted into this semicircle so as to roll freely in the cavity. To the under-side of this slide the rack O is attached by means of a groove and a cross-piece, as shown in Figs. 2825, 2831, 2832. At each end of the slide U suitable fastenings V, Fig. 2832, are attached for holding down the file, with levers, rack, and springs. A handle W, Fig. 2825, with connecting-rods, bell-crank levers, and springs, is mounted underneath the file-bed I for disengaging the worm P from the rack O and allowing the slide U to be pushed freely endways, so as to bring it back easily after the file is cut. On the front of the main frame of the machine is mounted a leveller X, Figs. 2824, 2825, shown in Figs. 2833, 2834, for the purpose of pressing upon the file H and keeping it truly even with the edge of the chisel D; the upper end of this leveller is jointed to a horizontal weighted lever Y, Fig. 2824, one end of which is centred on the frame of the machine by means of a link-joint, and the other end is weighted by a ball; a rest is provided for holding up the lever when required, as shown dotted in Fig. 2824, so as to keep the leveller X clear of the file. Another lever Z, Fig. 2824, is mounted upon a centre in the frame, for the purpose of raising the vertical slide C, which carries the chisel, and is provided with notches to hold it in position.

Mode of Action.—When the file-bed I has been adjusted to the proper position, and the blank H to be cut fixed upon the semicircular slide U, the chisel-slide C is lowered, so as to bring the edge of the chisel down upon the blank. The force of the main-spring E then brings the surface of the blank perfectly even with the edge of the chisel D, in consequence of the rolling movement allowed by the semicircular slide U; in this position it is allowed to remain whilst the leveller X attached to the weighted lever Y is brought down upon the blank: a slot-hole in the middle of the frame of the leveller X allows it to move so much as to bring its lower edge exactly parallel with the edge of the chisel and true to the surface of the blank, in which position it is then secured by hand by the tightening screw, as shown in Figs 2824, 2825. The blank is now slided along to the starting point, and the machine put in motion. If the blank to be cut is a taper flat file, the pawl G which actuates the pressure cam F pressing upon the main-spring E is put in gear, and the deeper side of the cam is gradually brought down upon the spring, causing it gradually to increase the pressure upon the chisel-slide C, and consequently increase the intensity of the blow until the chisel reaches the widest part of the file. When cutting a parallel or equalling file this apparatus is not required. After the file has traversed the length required to be cut, the driving clutch is thrown out of gear and the machine instantly stops; the chisel-slide C is raised by the lever Z, the worm P disengaged from the rack O by the handle W, and the semicircular slide U drawn back; the file is then released and replaced by another, and the operation repeated. After

the first cut has been completed, as shown in Fig. 2829, the second cut is given in the contrary direction across the file, by turning the file-bed I round to the proper obliquity. Every description of round or half-round files is cut in this machine by the use of a revolving bed and dividing apparatus.

In regard to the durability of the cutting chisels in this machine, it is remarkable that they cut five times as many files as can be cut by hand without re-sharpening; and the reason seems to be that the chisel is driven into the blank and withdrawn again in a perfectly straight line, and without any rubbing action; whereas in hand-cutting, the fine edge of the chisel is rubbed a short distance along the surface of the blank until it comes in contact with the last raised tooth, which is the only guide the hand-cutter has to produce regularity of cut. Fig. 2827 is a diagram of the file-teeth and chisel, exhibiting the action of the chisel in raising the teeth in hand-cutting, and its inclined position; and Fig. 2828 is a corresponding diagram of the chisel in this machine, showing the vertical position of the chisel and the inclination of the file travelling underneath it.

In the files cut by this machine the teeth are raised with perfect regularity, and consequently when the file is used each tooth performs its proper share of work; whereas in hand-cutting, from the varying power of the muscles, especially towards the close of the day, it is impossible to produce such perfectly uniform work.

FILTER. Fr., *Filtre;* Ger., *Filter, Seiher;* Ital., *Filtro;* Span., *Filtro.*

See Water-works.

FIRE-ARMS. Fr., *Armes à feu;* Ger., *Feuerwaffen;* Ital., *Armi da fuoco;* Span., *Armas de fuego.*

Trials of small fire-arms and accoutrements have recently been made by a Board of American officers at St. Louis. The particulars, data, and results of these trials, which we give, are taken from the New York Army and Navy Journal.

The Board met at St. Louis Arsenal, March 2, 1870, in pursuance of orders. Captain K. R. Breese, U. S. navy, was present during all the experiments of the Board until April 5, 1870. General J. H. Potter was deputed to conduct the experiments and tests determined on by the Board. These experiments were commenced March 11, and continued till their completion, May 23, 1870.

The following is a list of the arms, accoutrements, and equipments received at the St. Louis Arsenal, under the provisions of General Orders No. 72, and examined by the Board, namely;—

Rifles.

1 Remington rifle, cal. 50, No. 286, from Springfield armoury.
1 Springfield breech-loading rifle musket, cal. 50, mod. 1868, from Springfield armoury.
2 Peabody (Wessely) rifles, cal. 42 (withdrawn).
1 Peabody (Wessely) rifle, cal. 42.
1 „ (self-cocking) rifle, cal. 42.
2 „ (Spanish) rifles, cal. 43.
2 „ (Roumanian) rifles, cal. 45.
2 „ (Springfield) „ cal. 50.
1 Remington rifle, cal. 42, No. 2.
1 Remington rifle, cal. 44, No. 3, sword bayonet.
1 Remington rifle, cal. 50, No. 4.
1 Remington rifle, cal. 51, No. 5, triangular bayonet.
1 Remington (Spanish) rifle, cal. 43.
1 „ (Ryder) „ cal. 50.
1 „ (modified) „ cal. 50.
2 Roberts' (Springfield) rifles, cal. 50, U. S. bayonets.
1 Roberts' (Springfield) rifle, cal. 50, No. 4, U. S. bayonet.
1 Roberts' (Jackson's improvement), cal. 50.
1 „ (Starr's „), cal. 50.
1 „ centre-lock rifle, cal. 50.
1 Berdan's rifle, cal. 42.
1 Colt's rifle, cal. 42, triangular bayonets.
1 „ cal. 50, „
1 Thieme (Baxter's), cal. 50, U. S. bayonet.
2 Triplett and Scott rifles, cal. —.
1 Sharp's musket, cal. 50, U. S. bayonet.
1 Ward-Burton rifle, cal. 42, triangular bayonet.
1 Ward-Burton rifle, cal. 45, sword bayonet.
1 „ cal. 50.
1 Hubbell rifle, cal. 50.
1 Martini-Henry rifle (long block), cal. 45.
1 „ (short block), cal. 45.
1 Morgenstern rifle, cal. 42.
1 „ barrel, cal. 50.
1 Conroy rifle, cal. 42.

Carbines.

1 Remington carbine, cal. 44, No. 1.
1 Roberts' centre-lock carbine, cal. 50.
1 Sharp's carbine, cal. 50.
1 Remington carbine, cal. 50, from Springfield armoury.
1 Sharp's carbine, cal. 50, from Springfield armoury.
1 Spencer carbine, cal. 50 (Stabler attachment), Springfield armoury.
1 Springfield carbine, cal. 50 (Stabler attachment), Springfield armoury.
1 Conroy carbine, cal. 45.

Pistols.

1 Remington revolver, cal. 44, Springfield armoury.
1 National Arms Company revolver, cal. —.
1 Remington single pistol (modified), cal. 50.
1 „ single-barrelled pistol, cal. 50.
4 Remington revolvers, cal. 44, Nos. 2, 3, 4, and 5 respectively.
1 Smith and Wesson revolver, cal. 44.
1 Whitney Arms Company revolver, stationary breech, cal. 44.
1 Whitney Arms Company revolver, revolving breech, cal. 44.

Bayonets.

2 Remington rifles, cal. 50, with Colonel Anson Mill's bayonet attachment.
1 contract rifle musket, mod. 1861, cal. 58, with P. A. Oliver's bayonet attachment.
1 contract rifle musket, mod. 1863, cal. 58, with trowel bayonet in stock; Captain De Witt C. Poole.
25 trowel bayonets and scabbards; Lieut. E. Rice, U. S. army.

Miscellaneous.

Dr. Hay's attachment to Springfield breech-loader rifle musket, cal. 50, mod. 1868.
Dr. Hay's attachment to Remington revolver, cal. 44.

MISCELLANEOUS—*continued.*

Dr. Calver's automatic extractor for Colt's revolver.

Contract rifle musket, cal. 58, mod. 1869, with hair trigger.

Springfield breech-loader rifle musket, cal. 50, mod. 1866, with firing-pin of proper length to explode but not pierce the primer.

4 sets of tools for reloading Berdan cartridges, cal. 42, 45, and 58 respectively.

2 sets of tools for reloading Berdan cartridges, cal. 50.

Cartridges from J. W. H. Gieseler, New York.

ACCOUTREMENTS AND EQUIPMENTS.

Baxter's accoutrements; Sherlock's accoutrements; Snider's accoutrements; Seymour's accoutrements; Penrose's accoutrements; Horstman's accoutrements; cooking canteen; metallic tompion; picket-pin; A. W. Lee's knapsack; O. E. Wood's knapsacks (2); Lieutenant W. C. Manning's knapsack; Colonel G. K. Mizner's knapsack and saddle-bags; Captain J. Clifford's knapsack and cartridge-belts; General Hoffman's bayonet-scabbard attachment; William Cline's baggage-supporter; Charles Ewing's tent overcoat; two tents (General B. S. Roberts); bridle and bit.

2 cartridge boxes, different sizes (D. W. C. Baxter).

1 cartridge box (C. H. F. Thieme).

6 cartridge boxes, different sizes (Captain S. A. Day).

1 cartridge box and belt (Captain W. F. Brewerton).

1 cartridge box (Lieutenant C. L. Best).

2 cartridge boxes (Lieutenant J. R. McGinness).

1 cartridge-box magazine (J. M. Hawkins).

1 „ (Kilborn Knox).

1 „ (A. D. Laidley).

1 cartridge box (Lieutenant Thomas Connolly).

4 cartridge boxes, cavalry, with belts and pouches (Lieutenant J. G. Butler).

4 cartridge boxes, infantry, with belts and pouches (Lieutenant J. G. Butler).

1 cartridge belt with detachable thimbles and tompions and belt-plates.

10 cartridge belts and plates (Colonel Anson Mills).

1 cartridge box (Captain N. H. Coster).

4 „ boxes (C. Howlett).

1 „ box (General B. J. Roberts).

1 „ „ (General A. Baird).

1 „ „ (Captain Clifford).

1 „ „ (General Morris).

2 „ boxes (Benjamin Loyd).

1 „ box holster, leather (Lieutenant Thomas Connolly).

1 cartridge-box holster, wood (Lieutenant Thomas Connolly).

1 cartridge box (Lieutenant Thomas Connolly).

It was decided to confine the experiments with fire-arms to tests of the qualities of the breech mechanism of the various systems submitted to the Board, using the ammunition furnished by the inventors, and subjecting each arm to the same test as far as practicable.

The following programme of experiments was adopted, namely;—

I. *Simplicity of Construction.*—Each arm to be dismounted, examined, and the number of its pieces to be noted.

II. *Accuracy of Fire.*—Test: fifteen shots to be fired from a fixed rest, at a target. Distance 100 yards.

III. *Rapidity of Fire.*—Test: twenty-five shots to be fired from the shoulder; fair aim to be taken at the target. Distance, 100 yards.

IV. *Endurance.*—Test: each gun to be fired at a target 500 times from a fixed rest; distance, 100 yards. The arm to be allowed to cool at the end of each 100 rounds, but not to be cleaned during the test. At the end of this test the arm to be cleaned and examined to ascertain its condition.

V. *Effects of Exposure to the Weather and Firing.*—Test: 400 rounds to be fired without cleaning the arm; 100 on each alternate day. The arm to be exposed to the effects of the sun and rain (or water artificially applied) during each day of the test, and the exposure continued for three days thereafter. The arms to be cleaned and examined.

VI. *Effects of Sand and Dust on the Breech Mechanism.*—Test: eight shots to be fired; then fine dry sand to be sifted over the breech mechanism when closed, and eight shots fired; then fine dry sand to be sifted over the same parts when open, and nine shots fired. The sand to be removed in each case by shaking the piece, or using only the hand. The piece then to be examined and cleaned.

VII. *Effects of Salt Water.*—Test: the arm to be placed for three hours in brine, covering the breech mechanism and chamber; then to be exposed in the open air until the next day, and fifty shots to be fired.

VIII. *Effects of Defective Ammunition.*—Test: the arm to be fired with six cartridges rendered defective in the following manner;—1st. One cut longitudinally from the end of the case to the ribs, and placed in the chamber with the cut upward. 2nd. One cut longitudinally from the end of the case to the rim, and placed in the chamber with the cut downward. 3rd. One to be cut helically from the end to the rim. 4th. One to be cut at the base, so that the firing-pin in firing will pierce it. 5th. One to be pierced through the base at four points. 6th. One to be filed through the rim.

IX. *Strength of the Breech Mechanism.*—Test: the arm to be fired once with a double and once with the triple charge of powder and lead.

The results with the best samples of the six principal systems reported upon by the Board are as follows;—

I.—REMINGTON RIFLES. Fig. 2835.

1.—*Remington Rifle modified so as to load at the half-cock, cal. 50, sent by Colonel Schofield.*

I. Was dismounted, examined, and found to consist of fifty-five pieces.

II. This arm was fired with the United States' cartridges for accuracy.

III. The arm was fired for rapidity. Time, 2 min. 23 sec. One cartridge failed to ignite. Barrel slightly leaded.

IV. Arm tested for endurance.

First 100 rounds; time, 11 min. One cartridge failed to ignite. Barrel slightly fouled. Distance between extreme shots, 30 in.; cases extracted with difficulty.

Second 100 rounds; time, 10 min. 30 sec. One cartridge failed to ignite. Distance between extreme shots, 34 in.

Third 100 rounds; time, 11 min. Six cartridges failed to explode. Distance between extreme shots, 68 in.

Fourth 100 rounds; time, 12 min. Six cartridges failed to ignite. Balls ranged wild.

Fifth 100 rounds; time, 11 min. Five cartridges failed to explode. Shots all over target.

The arm worked well all through the test; many of the cases were drawn with difficulty. The main-spring worked with much friction on the hammer, and small particles of iron were found in the breech mechanism. Barrel much fouled and leaded.

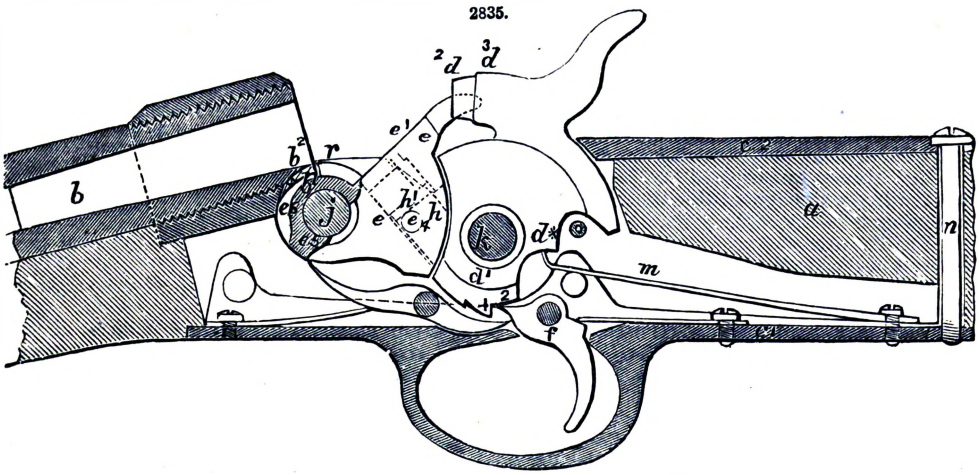

Remington's latest Patent Breech-loading Rifle.

V. Arm was exposed and fired as prescribed in the fifth test, from April 7 to April 16, and worked freely throughout this trial. No additional signs of weakness.

VI. The arm was subjected to the sand test, and worked freely throughout this trial. Some sand was found in the inside of the guard-plate among the springs.

VII. Arm subjected to the salt-water test. It was rusty, but worked freely

VIII. Arm fired with defective cartridges. There was a slight escape of gas from the fifth, and much gas escaped from the sixth cartridge. Piece uninjured.

IX. Test of strength by firing increased charges. After the second charge the breech-block moved very stiffly. The lower portion of the barrel was pressed against the breech-block. The lower portion of the chamber was enlarged.

2.—*Remington Rifle, Springfield barrel, No.* 4, *cal.* 50, *sent from Remington and Sons.*

I. Was dismounted, examined, and found to consist of fifty-five pieces.

II. This arm was fired with the Sharp's (Martin) cartridge for accuracy.

III. The arm was fired for rapidity; time, 2 min. 3 sec.

IV. Arm tested for endurance with United States' cartridges.

First 100 rounds; time, 7 min. 5 sec. Four cartridges failed to ignite. Dispersion of balls, 25 in. by 21 in.

Second 100 rounds; time, 5 min. 28 sec. One cartridge failed to ignite. Dispersion of balls, 22 in. by 19 in.

Third 100 rounds; time, 4 min. 57 sec. Dispersion of balls, 20½ in. by 23 in.

Fourth 100 rounds; time, 5 min. 7 sec. Two cartridges failed to ignite. Dispersion of balls, 24 in. by 20 in.

Fifth 100 rounds; time, 4 min. 40 sec. One cartridge failed to ignite. Dispersion of balls, 24 in. by 20 in.

The arm worked freely throughout this test; the barrel was very little fouled. No leading. No signs of weakness or wear in any of the parts.

V. Arm was exposed and fired as prescribed in the fifth test. It was very rusty, but worked freely throughout, and showed no signs of weakness or wear in any of the parts.

VI. Arm was subjected to the sand test and worked freely; some sand was found in the inside of the guard-plate.

VII. Arm was subjected to the salt-water test, and, though very rusty, worked freely. No signs of weakness.

VIII. Arm fired with defective cartridges. No apparent escape of gas in the first three. The case of the second extracted with difficulty. Gas escaped in the fourth and fifth, and in the sixth cartridge a flame was seen above the breech-block. It worked freely and was not injured.

IX. Arm tested for strength with increased charges. After the second charge the breech was opened with difficulty another shell wa not easily extracted. The chamber was slightly enlarged near the extractor. The piece otherwise uninjured.

The breech-block of this arm differs from the one submitted to the Board from the Springfield armoury in that it is without a groove in its front underneath the barrel, and is somewhat stronger in rear of the pivoted pin. The shell extractor is placed somewhat nearer the bottom of the chamber.

II.—Springfield Breech-loading Rifle Musket.

Springfield Breech-loading Rifle Musket, cal. 50, No. 14,515, sent from Springfield Armoury.

I. Was dismounted, examined, and found to consist of sixty-two pieces.

II. This arm was fired with the United States' cartridge for accuracy.

III. The arm was fired for rapidity; time, 2 min. 33 sec.

IV. Arm tested for endurance.

First 100 rounds; time, 11 min. 30 sec. Barrel slightly fouled.

Second 100 rounds; time, 11 min. Distance between extreme shots, 22½ in.

Third 100 rounds; time, 11 min. Distance between extreme shots, 17½ in.

Fourth 100 rounds; time, 10 min. 30 sec. Distance between extreme shots, 21½ in.

Fifth 100 rounds; time, 9 min. 30 sec. Distance between extreme shots, 21 in.

One cartridge failed to ignite during this test. Barrel slightly fouled; no leading.

The arm was cleaned and examined; no sign of weakness or wear in any of the parts. The extractor worked well, throwing the cases clear of the piece in every instance.

V. This arm was exposed and fired, as prescribed in the fifth test, from April 7 to April 16, and worked freely throughout this test. It was very rusty, especially in the receiver. No signs of wear or weakness in any of the parts.

VI. The arm was subjected to the sand test. It worked freely throughout this test; but very little sand remained in the receiver.

VII. Arm was subjected to salt-water test, and was quite rusty. It worked freely; no signs of wear or weakness.

VIII. Arm fired with defective cartridges. No apparent escape of gas in the first three. These shells extracted easily. In the fourth some gas passed up the firing-pin, and blackened the face of the hammer. Great escape of gas from the fifth and sixth. No signs of weakness or injury in any of the parts. The gun worked well.

IX. Arm was tested for strength with the increased charges. The effect of the second charge was to blow off the entire base of the case. No injury to the piece. Great escape of gas. Gun worked stiffly. Arm examined. No signs of wear or weakness in any of the parts.

III.—Sharp's Rifle Musket.

Sharp's Rifle Musket, cal. 50, sent by Sharp's Rifle Manufacturing Company.

I. Was dismounted, examined, and found to consist of seventy-eight pieces.

II. This arm was fired with the Sharp's (Martin) cartridge for accuracy.

III. The arm was fired for rapidity; time, 2 min. 41 sec. One cartridge failed to ignite. No leading of the barrel.

IV. Arm tested for endurance.

First 100 rounds; time, 11 min. Two cartridges failed to ignite. Dispersion of balls, 11 in. by 13 in. Barrel slightly fouled. No leading.

Second 100 rounds; time, 9 min. Three cartridges failed to ignite. Dispersion of balls, 34 in. by 9 in.

Third 100 rounds; time, 7 min. Dispersion of balls, 16 in. by 9 in.

Fourth 100 rounds; time, 5½ min. Dispersion of balls, 15½ in. by 7 in.

Fifth 100 rounds; time, 6 min. Eight cartridges failed to ignite. Dispersion of balls, 20 in. by 10 in.

The arm worked freely throughout the test. Fouling of barrel not increased after the first 100 rounds. No leading.

V. Arm exposed and fired, as prescribed in fifth test, from April 7 to April 16, and worked freely throughout the test. The front guard-screw was found to be broken. No other signs of wear or weakness in any of the parts. Arm slightly rusted.

VI. The arm was subjected to the sand test. Two cartridges failed to ignite. Arm worked freely, and very little sand remained in the breech mechanism.

VII. Arm subjected to the salt-water test, and though quite rusty worked freely. No signs of wear or weakness.

VIII. Arm fired with defective cartridges. In the fourth cartridge gas passed up the firing-pin. Gas escaped from above and below the breech-block. Piece not injured.

IX. Arm tested for strength with increased charges. The second charge blew off the base of the case, so that the extractor could not remove it from the chamber. Piece not injured, and worked freely.

IV.—Morgenstern Rifle.

Morgenstern Rifle, cal. 42, sent by Herman Boker and Co.

I. Was dismounted, examined, and found to consist of forty-four pieces.

II. This arm was fired for accuracy with the Berdan cartridge (greased). Three cartridges failed to ignite.

III. The arm was fired for rapidity; time, 2 min. 46 sec. Ten cartridges failed to ignite. The cartridges were partially freed from the external lubricant on the ball patch, and the arm again

fired for rapidity; time, 2 min. 25 sec. Seven cartridges failed to ignite. Stock slightly split at the recoil shoulder on both sides of the barrel.

IV. Arm tested for endurance.

First 100 rounds; time, 14 min. 30 sec. Dispersion of balls, 30 in. by 12½ in. Many of the cartridges failed to ignite.

Second 100 rounds. The seventy-fifth cartridge failed to ignite, after which twelve cartridges were tried, and all failed to ignite. Arm removed, as it would not ignite the cartridges.

The same breech mechanism having been fitted to the Springfield barrel, cal. 50 (sent with the rifle), was again tested for endurance with the Sharp's (Martin) cartridge, unpatched ball.

First 100 rounds; time, 6 min. 8 sec. Dispersion of balls, 20 in. by 32 in. Twelve cartridges failed to ignite.

Second 100 rounds. The seventy-eighth cartridge failed to ignite, as did several which were immediately afterwards tried. On examination of the breech-block it was found that the hammer shoulder washer was partially unscrewed, so as to prevent the point of the hammer from projecting sufficiently to ignite the cartridges.

The arm having been cleaned, and the shoulder washer screwed into its proper position, it was tested again for endurance.

First 100 rounds; time, 8 min. 22 sec. Thirty-five cartridges failed to ignite. Dispersion of balls, 41 in. by 28 in.

Second 100 rounds; time, 7 min. 15 sec. Thirty cartridges failed to ignite. Dispersion of balls, 25 in. by 16 in.

Third 100 rounds; thirteen cartridges tried; eight failed to ignite. The arm was withdrawn, and a stronger spring (one sent with the arm for the United States, cal. 50 cartridge) was inserted, and the firing resumed. Dispersion of balls, 14 in. by 16 in. Seven cartridges failed to ignite.

Fourth 100 rounds; time, 10 min. 40 sec. Sixteen cartridges failed to ignite. Dispersion of balls, 34 in. by 22 in.

Fifth 100 rounds; time, 6 min. 7 sec. All the cartridges ignited. Dispersion of balls, 55 in. by 40 in. Barrel somewhat fouled slightly, and leaded. The main-spring did not work freely, owing to too much friction.

V. This arm was exposed and fired, as prescribed for the fifth test, from April 19 to April 28. The arm was very rusty in the inside of the receiver, but the working parts were free from rust and in good working order. The upper end of the thumb-piece was broken during the firing, and was replaced by one of a different pattern (sent with the arm).

VI. Arm was subjected to the sand test, and worked freely throughout; and but very little sand remained in the receiver.

VII. Arm subjected to the salt-water test, and though rusty worked freely. No signs of wear or weakness.

VIII. Arm fired with defective cartridges. Gas escaped from the last three cartridges. The last one threw the hammer back to half-cock. Arm uninjured.

IX. Arm was tested for strength with increased charges. The second charge broke the face-plate off its shoulder and cracked it radially in five places. Hammer thrown back to half-cock. The base of the case was blown off. Except the face-plate, the piece was uninjured.

V.—Martini-Henry Rifle, Fig. 2836.

1.—*The Martini-Henry Rifle, cal. 45 (short breech-block), sent by F. Martini, Switzerland.*

I. Was dismounted, examined, and found to consist of sixty-one pieces.

II. The arm was fired for accuracy, with the Boxer cartridge (bottle-shaped), paper-patched ball. In three instances the hammer pierced the primer.

III. The arm fired for rapidity; time, 6 min. Sixteen cases were forced out with the ramrod. In some instances the base became detached by the ramrod, and the remainder of the case was removed with pliers.

IV. Arm tested for endurance.

First 100 rounds; sixty shots fired. After the fifth cartridge every case was removed with the ramrod, or with pliers. On examination it was found that the cases were covered with a lacquer. This was removed from the remainder of the 100 rounds by means of alcohol. The cases were readily drawn by the extractor, with five exceptions, when the ramrod was applied. Dispersion of balls, 17 in. by 27 in.

There being but 250 cartridges received for each Martini rifle, the number of cartridges used in most of the tests for these arms was necessarily reduced, and one test omitted. One hundred and fifty cartridges were to be used in the fourth test.

Fifty rounds, from some of which the lacquer was removed, were fired. The case of those from which the lacquer was wiped extracted easily: the others it was necessary to force out with the ramrod. In one instance the extractor removed the iron base of the case without starting the shell, and it was removed with pliers. The case of the forty-sixth cartridge could not be removed, even with the rammer and pliers. The test was discontinued. The arm worked stiffly throughout this test. The fifth test was omitted.

VI. Arm subjected to sand test: three shots fired. After the first shot the sand was sifted over the breech mechanism, closed, and one shot fired. Then the sand was sifted over the breech mechanism when open, and one shot fired. The breech mechanism worked freely, but did not extract the cases. Sand was found in the receiver, on the guard-plate, and in rear of the breech-block.

VII. The arm was subjected to the salt-water test, and four shots fired. Arm somewhat rusted, but worked freely. In each instance the cases were extracted by the extractor on second trial.

VIII. Arm tested with defective cartridges. No escape of gas from the first three cartridges.

Gas escaped at the breech-block from the fourth and fifth. Great escape of gas from the sixth cartridge. The lever was unlocked, and the breech-block was slightly lowered.

IX. Arm tested for strength by firing increased charges. Gas escaped from the breech and unlocked the lever. Arm uninjured.

No signs of wear or weakness, with the exception that the lever was unlocked in one instance by firing a defective cartridge, and in two instances by firing increased charges.

2836.

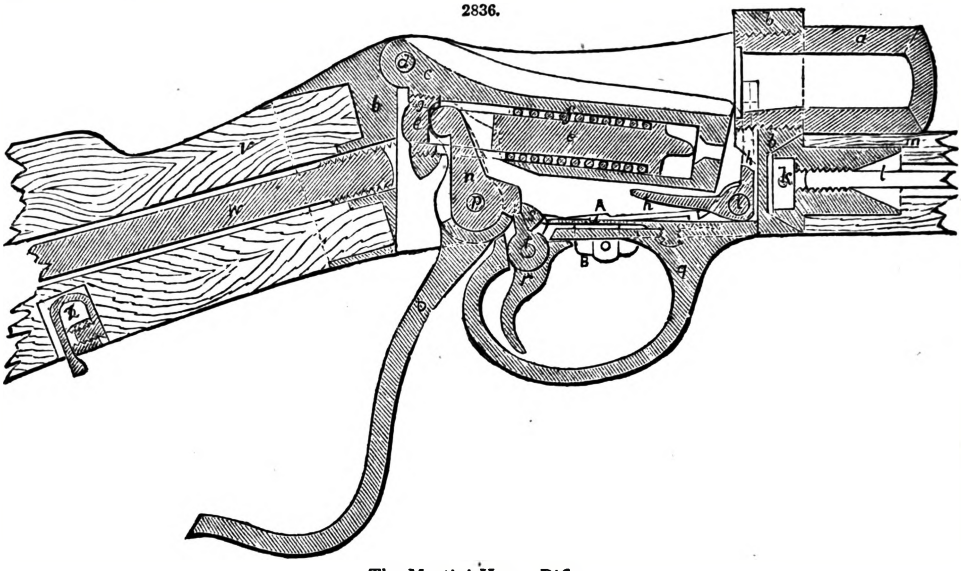

The Martini-Henry Rifle.

2.—*The Martini Rifle, cal.* 45 (*long block*), *sent by F. Martini, Switzerland.*

I. Was dismounted, examined, and found to consist of sixty-two pieces.

II. The arm was fired for accuracy, with the Boxer cartridge (cylindrical paper-patched ball).

III. Arm fired for rapidity; time, 2 min. 38 sec. The cases were not extracted in every instance the first time the breech-block was opened.

IV. Arm tested for endurance with 150 rounds.

First 100 rounds; time, 12 min. Dispersion of balls, 35 in. by 43 in. Two cases were removed with the ramrod. In one instance the base of the shell was removed by the extractor without starting the case. The base was pulled off by the extractor without starting the case, which was removed with pliers. In some instances the primers were pierced.

Fifty rounds. Dispersion of ball, 43 in. by 21 in. The cases, with three exceptions, were drawn by the extractor. Arm worked stiffly; barrel slightly fouled; no leading.

V. Weather test omitted.

VI. Arm subjected to the sand test; three shots fired. After the first shot, sand was sifted over the breech mechanism, closed, and one shot fired; then sand was sifted over the breech mechanism open, and one shot fired. After the second application of sand, the firing-pin at first did not come in contact with the cartridge, but did after several trials. Arm worked stiffly, and with a grating noise. On examination sand was found in the receiver, in the notches of the tumbler, among the pieces attached to the guard-plate.

VII. Arm subjected to the salt-water test, and four shots fired. Arm did not cock at first every time the breech was entirely opened, but did after working it some time. Extractor started the cases, but did not draw them from the chamber.

VIII. Arm fired with defective cartridges. No escape of gas from the first and third cartridges. Gas escaped from the second, fourth, and fifth cartridges. The sixth cartridge unlocked and slightly depressed the lever. The upper stud of the safety device was blown off. Heavy escape of gas below the breech-block.

IX. Arm tested for strength, by firing with increased charges. Gas escaped from the breech, and unlocked the lever.

With the exception above, no sign of wear or weakness in any of the parts.

VI.—Ward-Burton Rifle, Figs. 2837 to 2843.

The Ward-Burton rifle is the most perfect and complete breech-loading fire-arm that has fallen under our notice; this fact will be proved in the sequel.

The Ward-Burton Rifle, cal. 50, *sent by W. G. Ward, New York.*

I. Was dismounted, examined, and found to consist of fifty-seven pieces.

II. The arm was fired with the United States' cartridge for accuracy.

III. The arm was fired for rapidity; time, 2 min. 21 sec.

IV. Arm tested for endurance.

First 100 rounds; time, 5 min. Distance between extreme shots, 99 in.; barrel much leaded.

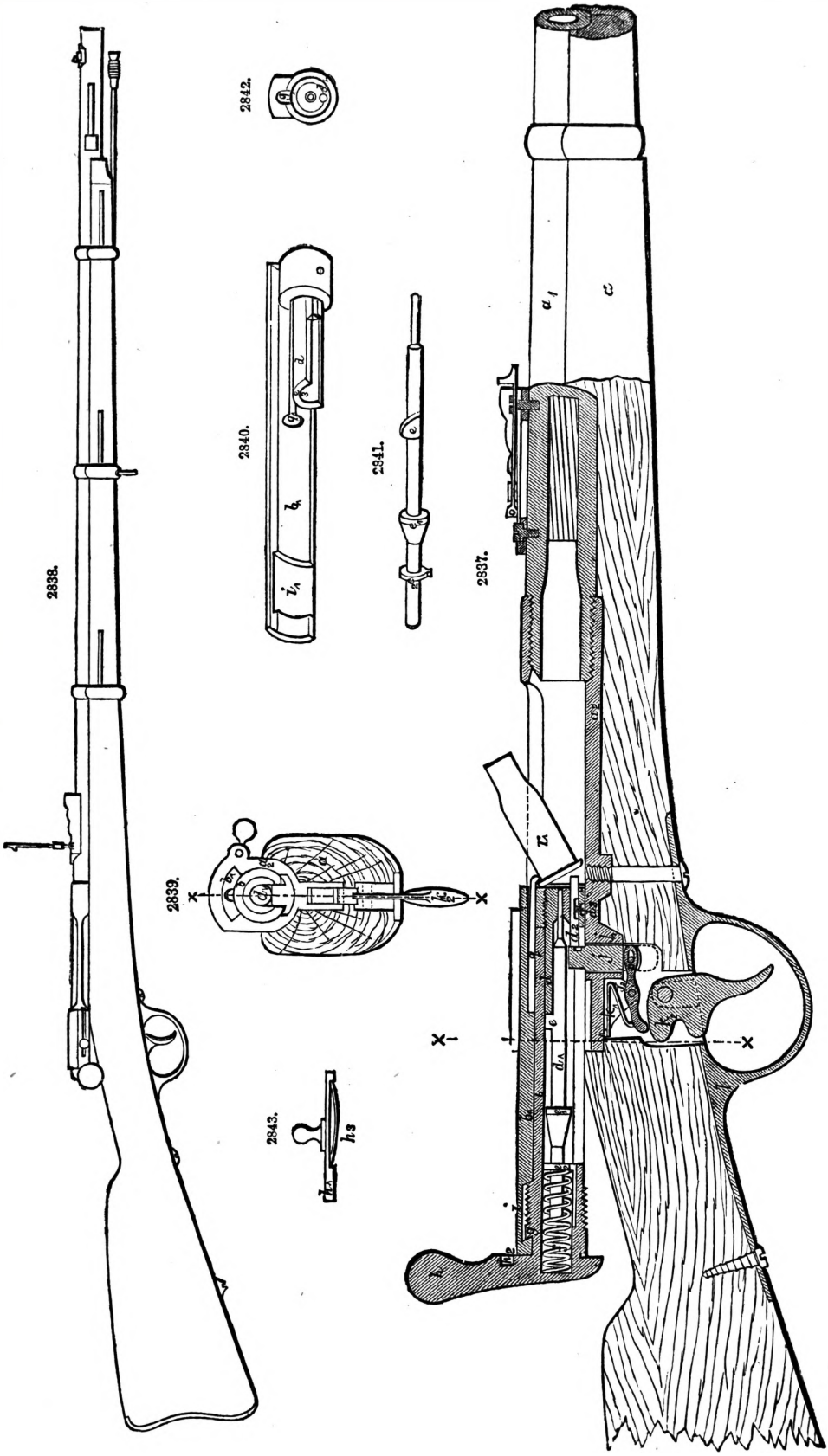
2838.
2842.
2840.
2841.
2837.
2839.
2843.

Second 100 rounds; time, 5 min. 35 sec. Distance between extreme shots, 57 in.

Third 100 rounds; time, 5 min. 10 sec. Distance between extreme shots, 58 in.

Fourth 100 rounds; time, 4 min. 30 sec. Balls wild; gun turned on the river; barrel very much leaded.

Fifth 100 rounds; time, 4 min. 20 sec. Balls thrown on the river.

Arm worked freely; no signs of wear or weakness in any of the parts; cases easily extracted, and thrown clear of the piece.

V. This arm was exposed and fired as prescribed in the fifth test, from April 7 to April 16. Arm rusty, but worked freely; no signs of wear or weakness.

VI. The arm was subjected to the sand test. It worked freely, and very little sand was found in the breech mechanism.

VII. Arm subjected to the salt-water test. The arm was rusty, but worked freely. No signs of wear or weakness.

VIII. Arm fired with defective cartridges. Slight escape of gas from the last three cartridges; piece uninjured.

IX. Arm was tested for strength with increased charges. Piece uninjured; shells were extracted with difficulty.

The Board remained in session, experimenting with and discussing the various arms and other devices presented to them, until the 10th of June, 1870, when they adjourned, after having submitted the following report.

We add the following recommendations and report as a specimen of American official jobbery, which is not far behind the best French or English specimen; what pulled the wires, in this case, we are unable to say.

Office Board on Tactics, Small Arms, &c., St. Louis, June 10, 1870.

General E. D. Townsend, Adjutant-General U. S. Army, Washington, D.C.

General,—The Board of officers appointed by General Orders No. 60, head-quarters of the army, Adjutant-General's Office, August 6, 1869, and whose duties were enlarged by General Orders No. 72, of October 23, 1869, have the honour to submit the following report upon the subject of small arms and accoutrements for the use of the army of the United States;—

Small Arms.

We respectfully refer, first, to the accompanying list of arms, accoutrements, &c., submitted for examination; second, to the daily record of proceedings, giving the plan adopted by the Board for testing the qualities of the various systems of arms submitted, the record of those tests and their results in detail; and, third, an abstract from the record, giving a history of the experiments with each arm. In addition to the recorded experiments, each arm was manipulated and its parts minutely examined by the members of the Board. Our investigations have been limited to the determination of the relative merits of the various systems of breech-loading small arms, without regard to questions of calibre, rifling, ammunition, &c. The main elements of excellence considered are strength, durability, and simplicity of breech mechanism; ease, certainty, and rapidity of firing; and security against injury to arms, or accident from use in the hands of troops. The records of details developed in the various experiments have only been made as incidental to the important tests above enumerated.

The following are the results of the deliberations of the Board, in view of our experiments with and examinations of the several systems of small arms. We have selected the following six systems for infantry musket in the order of relative merit;—(1) the Remington; (2) the Springfield; (3) the Sharp's; (4) the Morgenstern; (5) the Martini-Henry; (6) the Ward-Burton.

For cavalry carbines the order of merit is, in the opinion of the Board, the same as for muskets; but it is regarded as essential for cavalry service that the Remington carbine be so modified as to load at the half-cock.

Only the first three systems named possess such superior excellence as warrants their adoption by the Government for infantry or cavalry without further trial in the hands of troops. Of these three, considering all the elements of excellence and cost of manufacture, the Board are unanimously and decidedly of the opinion that the Remington is the best system for the army of the United States.

Of the breech-loading pistols submitted, the Board have selected the following six in the order of their relative merits;—(1) the Remington single-barrelled pistol, with guard, centre fire; (2) the Smith-Wesson revolver; (3) the Remington revolver No. 2, (4) the Remington revolver No. 5; (5) the Remington revolver No. 3; (6) the Remington revolver No. 4. The Remington is the only single-barrelled pistol submitted. It is an excellent weapon, but should be so modified as to load at half-cock. The Smith-Wesson is decidedly superior to any other revolver submitted. It should be modified as follows, namely: made centre fire; the cylinder lengthened so as to close the space in front of the breech-block, and countersunk to cover the rim of the cartridge; calibre increased to the standard. The main-spring of the Remington arm should be strengthened, so as to increase the certainty of fire; also the plunger should be made to strike more accurately the centre of the base of the cartridge.

The Board respectfully recommend that all small arms be made of the same calibre. Large calibre is regarded as even more important for pistols and revolvers than for arms of longer range. Pistols and revolvers should have the saw-handle so shaped that in bringing the weapon from the holster to an aim it will not be necessary to change the first grasp or bend the wrist. The charge of powder for the pistol cartridge should be increased as much as the strength of the weapon will justify, the limit to be determined by suitable experiments.

It is the opinion of the Board that cavalry armed with the sabre should have one or two single-barrelled pistols as a substitute for the carbine; and that cavalry armed with the carbine should have a revolver as a substitute for the sabre. When time will permit, cavalry troops should be

instructed in the use of all these arms: and all should be kept on hand with small bodies on the frontier, where every variety of cavalry service may be required. In large bodies of cavalry a portion should be armed with the carbine and revolver, and the rest with the sabre and pistols.

The Board recommend that the present dismounted officers' swords be exchanged for a small sword, light, straight, and with metallic scabbard; that company non-commissioned officers' swords be dispensed with—first sergeants to retain the sash: musicians to have a pistol instead of a sword. Light artillery should be armed with the revolver instead of the sabre. All small arms should be made more uniform on the trigger than those now in use. The traction for muskets and carbines should be from 6 to 8 lbs.; that for pistols 4 to 5 lbs. The sights of all rifled arms should be finer than those now in use in the army. In the Remington musket and carbine the comb of the hammer should be made longer, and modified in shape so as to rest more easily on a man's arm while at a support. The face of the hammer should be somewhat rounded, so as to avoid cutting the hand in opening the breech. The Board recommend that the barrels of all small arms shall be browned.

Bayonets.

The trowel bayonet presented by Lieutenant Rice is believed by the Board to be a valuable substitute for the common bayonet, on account of its great usefulness as an intrenching tool. It also appears to be quite as formidable a weapon as the other. This, however, depends greatly on the conception of the soldier who may be armed with it. The Board, therefore, recommend that 500 trowel bayonets be manufactured and placed in the hands of twenty or twenty-five company commanders whose companies are skilled in the bayonet exercise, and that they be instructed to try them with special reference to the *morale* upon their men. If this test prove satisfactory, the Board recommend that the trowel bayonet be adopted to the exclusion of all others.

Cartridge Boxes.

The following appears to the Board to be the order of relative merit of the cartridge boxes submitted;—(1) Lieutenant J. Butler's pouch; (2) Lieutenant J. Butler's box; (3) General Dyer's pouch; (4) Lieutenant C. L. Best's box; (5) Colonel S. Crispin's box; (6) Lieutenant-Colonel Roberts' box. Neither of those named seem quite to meet the present wants of the infantry soldier. The Board recommend the adoption of a form of pouch, a rough sample of which is submitted with this report, which shall fulfil the following conditions, namely; The pouch to be of soft leather, except its face and cover, to be lined with sheepskin, and to be of the size and shape to contain one packet of cartridges; the package to contain twenty-four cartridges arranged in three rows. The pouch will contain the same number of cartridges emptied into it loosely. Each man should be provided in time of war with four of these pouches, to be properly distributed upon his belt. The cartridges should remain in the original packages until required for use, when one package at a time should be broken and the cartridges emptied loosely into the pouch for most convenient handling. In this manner a man will easily carry ninety-six rounds. In time of peace one or two pouches will be sufficient.

Equipments.

The six sets of infantry equipments selected by the Board are arranged in the following order of relative merit;—(1) Penrose's equipments, complete; (2) Baxter's equipments, complete; (3) Sherlock's equipments, complete; (4) Seymour's knapsack; (5) Clifford's knapsack; (6) Mizner's knapsack. The Board do not regard either of those submitted as a satisfactory solution of the important and difficult question of the best form of infantry equipments.

Tent Overcoat.

The tent overcoat submitted by Charles Ewing, attorney, is not regarded by the Board as a good substitute for both the shelter tent and poncho, although it would answer well as a substitute for either one or the other for infantry. It would not be a suitable substitute for the poncho for cavalry. In view of these facts, and of the great number of shelter tents and ponchos now on hand, it is not thought advisable to recommend the adoption of the tent overcoat.

Picket-pin.

The Board recommend that the picket-pin submitted by H. W Lyon, blacksmith Third U. S. Cavalry, be adopted instead of the one now in use.

Bayonet-scabbard Attachment.

The Board also recommend the adoption of General Hoffman's modification of the bayonet-scabbard attachment, as being equally applicable and valuable with the common or trowel bayonet.

All other articles submitted to the Board were examined, as well as those specially named in this report and in the daily record, but none except those specially referred to were regarded as of sufficient merit to require special notice.

All of which is respectfully submitted.

J. M. Schofield, Major-General.
J. H. Potter, Lieutenant-Colonel Fourth Infantry, Brevet Major-General U.S.A.
W. Merritt, Brevet Major-General, Lieutenant-Colonel Ninth Cavalry.
Jas. Van Voast, Major Eighteenth Infantry.
J. Hamilton, Brevet Colonel, Major First Artillery.

Ordnance Office, War Department, July 8, 1870.

Respectfully returned by the Adjutant-General.

The opinion expressed by the Board in regard to the relative merits of the several breech-loading systems for small arms is not wholly concurred in by this bureau, and is not, it is thought, sustained by the record of the proceedings which accompanies this report, which shows that serious defects existed in the Remington arms, not observable in the Springfield or the Sharp's, such as frequent failures to explode the cartridges, occasional sticking of the empty shell in the chamber, and the difficulty of moving the hammer and breech-block after firing with heavy charges. The first two of these defects, and also the objection arising from the arm being loaded only at full-cock, have been brought to the notice of this bureau by the commanding officers of all companies using this arm. These defects show that the Remington arm should not be adopted before being thoroughly tested in service.

I agree with the Board that the Remington, the Springfield, and the Sharp's systems are decidedly superior to all other systems which have been brought to their notice, and I recommend that 1000 muskets and 300 carbines be prepared according to each of the three systems, and issued for comparative trial in service; companies of infantry and artillery to have an equal number of muskets of each system, and companies of cavalry an equal number of carbines of each system; monthly reports on the comparative merits to be made regularly to this bureau by company commanders, during a period of not less than twelve months after their first introduction into service, upon forms to be furnished by this bureau, which reports, at the end of twelve months, to be laid before a Board of officers, to be appointed to select a breech-loading arm for adoption by the War Department for the military service. This department is now making the Springfield musket, and is preparing to make the Remington musket for the navy; and it can readily have some of the Sharp's rifles on hand converted into muskets.

I recommend that authority be given to this bureau to purchase 1000 Remington single-barrel pistols, calibre 50, and 1000 Smith and Wesson revolvers of same calibre as our army revolvers (as recommended by the Board), and to have 1000 Remington revolvers altered after the plan of revolver No. 2; these pistols to be issued for comparative trial in service, as in the case of the muskets and carbines. If the revolver is to be retained in service, as I believe it should be, I do not think that the calibre should be increased to 50, which is the established calibre for muskets and carbines.

The recommendation of the Board that the barrels of all small arms be browned is not concurred in at this time. The Ordnance Board in 1868 recommended that "the sense of the army at large be ascertained in regard to browning arms in the hands of troops," and steps to that end have been taken, resulting in conflicting opinions from the field. Recently a Board of officers recommended that some arms should be plated with nickel and tried in service, and measures have been taken by this department in that direction. A limited number of arms might be browned, as recommended by the Board, and tested in service with other arms. It is recommended that 500 trowel bayonets be made and issued, as recommended by the Board. The recommendation in regard to cartridge boxes is concurred in, and it is recommended that a small number of each kind be procured and issued to troops for comparative trial. The recommendations in regard to picket-pins and bayonet-scabbard attachments are concurred in, so far as they apply to future fabrications and purchases. All other recommendations which relate to and affect this department are concurred in.

A. B. DYER, Brevet Major-General, Chief of Ordnance.

Head-quarters of the Army, July 12, 1870.

Respectfully submitted to the Secretary of War, concurring fully with the report of the Board.

W. T. SHERMAN, General.

The recommendations of the Chief of Ordnance are approved by the Secretary of War, July 16, 1870.

EDWARD SCHRIVER, Inspector-General.

The pious ardour of a political bishop, the patriotism of a well-paid official, or the extravagant views of an ordinary visionary inventor, may be readily exposed and moderated or damped by the application of a little sound reasoning, or by a trifle of common sense; but the bumptious pretentions of the inventor of a breech-loading fire-arm cannot be quenched,—they are irrepressible. The gun inventor requires but a smattering knowledge of mechanics; indeed, he only requires to know how the old gun-lock was formed, and how operated to strike a spark by the action of flint upon steel; this old device, so well adapted to effect the purpose for which it was designed, he generally retains to effect a dissimilar purpose, namely, to explode the *fulminate of mercury*, of which we will speak presently.

Out of every 100 men taken at random we have estimated that 54, at least, have contrived a breech-loading fire-arm: to those of the remaining 46 who are not driving a wedge on some War Office, our remarks are addressed.

To obtain the full advantages from a breech-loading fire-arm, the following qualifications, marked A, B, C, &c., are indispensable.

(A). The arm should be light, strong, serviceable, cheap, and readily made.

(B). The breech action simple and easily understood; the combined pieces easily taken apart, to effect cleaning or repairs, and afterwards easily united without the use of tools.

(C). The parts of the breech subject to motion should be well protected from sand, dirt, or wet · capable of long-continued and rapid firing without having but seldom to be cleaned.

(D). The gun should give a low trajectory with light recoil.

(E). The breech should resist squarely and effectively the force of the explosion; it should have its resisting power equally distributed all round the axis of the bore of the barrel.

(F). The breech should be so constructed that, in the event of a damaged cartridge being used,

or in the case of a cartridge bursting, as is often the case, particularly with the Boxer, the escaping gas should be directed off so that it could in no way injure the face or eyes of the soldier.

(G). The breech mechanism should be composed of but few parts, and be of a nature not easily damaged or broken when in use; there should be few, if any, screws to be removed, so that in the event of a casualty the soldier can repair damages upon the field of action without the aid of an armourer.

(H). A breech-loading gun is not perfect that is confined to the exclusive use of a special cartridge; and that cartridge should be fire and water proof,—not to be ignited by exploding of shells, or damaged by damp, rain, or from being transported.

(I). And, lastly, a fire-arm should have the stock in one piece, and not made up of different pieces.

The gun invented by Bethel Burton, with its details represented in Figs. 2837 to 2843, satisfies all the requirements which we have marked (A), (B), (C), &c. Besides, it is impossible, even when firing loose powder, to blow out the movable breech, which is suited to any calibre: the *piece* weighs but 8 lbs., and its penetration is great. The fire-arm represented, Figs. 2837 to 2843, has lately received some important improvements, which Burton has patented; the following description is taken from his specification;—

Fig. 2844 is a side view of the arm, ready to fire.

Fig. 2845 is a longitudinal section of the same.

Fig. 2846, the bolt and cover detached from the screw-support, with the spiral spring and piston projecting from the chamber of the bolt.

Fig. 2847 is the lever which works the bolt, with the screw-support attached.

Fig. 2848 is a front view of the same.

Fig. 2849 is a front view of the bolt.

Fig. 2850 a view of the piston.

Figs. 2851 to 2856 are sections of my improved cartridge.

In describing the parts, a is the stock, b the barrel, c the breech, d the screw-support, d^1 the lever attached thereto, d^2 the spiral spring in the lever between the pin d^3 and screw d^4, e is the cover and e^1 the bolt in one piece, f the piston-rod, f^1 a rib on the piston, f^2 a groove in the end of the piston, f^3 the finger or sear, f^4 the trigger, g the spiral or main spring, h the extractor, h^1 the pin for ejecting the cartridge, h^2 a pin for fastening in the extractor, i a groove in the breech at the end of the barrel, i^1 a hole through the breech into the groove, j a bevel on the underside of the front end of the bolt, k the position of the hole for the pin h^1 in the bolt, l the trigger-spring, m a stop-pin in the screw-support, n a groove in the screw-support in which the rib f^1 works, o a groove in the finger f^3, and p a groove in the after-part of the cover e, q a cam or incline on the coupling or end of the bolt e^1.

The breech is bored out and secured to the barrel in the usual way, and in the rear end of the breech there is formed a sectional screw corresponding to the one on the screw-support d; the whole of the threads of the screw in the breech are removed for $\frac{3}{8}$ and $\frac{1}{16}$ of an inch. The screw d on the support, Fig. 2847, is not cut close up to the face of the lever, for $\frac{3}{8}$ and $\frac{1}{16}$ of an inch, but is left solid. A groove is made close up to the face of the lever, and down to the diameter of the bolt, and one-half the distance from the face of the lever to the screw d, on the edge of which a bevel is made to fit a corresponding bevel p in the cover e which forms a dovetail. The screw-support d is bored out, as seen in dotted lines; the end of the bolt is turned down to fit; the thickness of the metal being divided, the strength of both is equal. A hole is bored out in the screw-support, and into the lever same size as the hole in the bolt, for the piston and spring to work in; the parts are then pushed into each other, and the lever turned, when they are firmly united together in the manner seen in Fig. 2845. In order to prevent the lever from turning until in its proper place, Burton says, I make a hole in the lever to within $\frac{1}{16}$ of an inch of the front face of the lever. I then make an oblong hole, clear through, which leaves a shoulder on the inside. In the other end of the hole I fit a screw d^4. I make a pin d^3 to fit in this hole by filing off two sides, which forms a shoulder or head on the pin, the head of which I make about $\frac{1}{16}$ of an inch, and place the pin in the hole; I then put in the spiral spring, and the screw which keeps them in place. In the rear end of the cover e I make a slot in which the point of the pin d^3 can readily enter. In coupling together the bolt and screw-support the pin d^3 is pushed back until the end of the cover e comes against it. The lever is turned until the stop m meets the side of the cover e, the point of the pin d^3 then enters the slot in the cover and prevents the lever from turning until the bolt is pushed forward when the point of the pin d^3, which projects above the top of

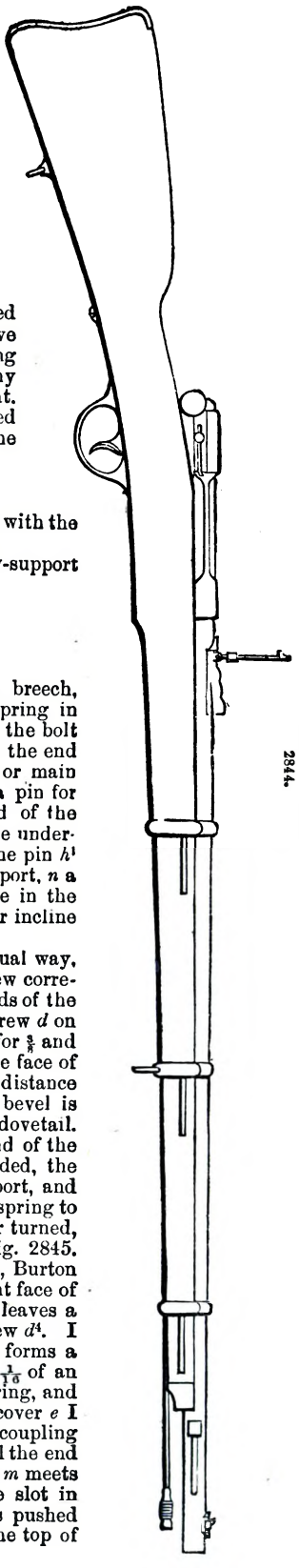

2844.

the cover, strikes against the end of the breech at c, and is pushed back and out of the slot in the cover e, which allows of the lever turning, and uniting the sectional screw-threads of the breech with those on the screw-support, which support the bolt against the explosion of the charge; it is then in the position seen in Fig. 2844. When the lever is turned for the purpose of withdrawing the bolt, the pin d^3 immediately enters into the slot of the cover as before. The bolt e^1 is bored out to receive the piston, as indicated by dotted lines; on the end of the bolt at q an incline or cam is cut on which the point of the rib f^1 of the piston works. The rear end of the rib f^1 enters the groove n in the screw-support when the latter is united to the bolt; when the lever is turned, the rib f^1, being in the groove n, causes the piston to turn with the lever, and the point of the rib to turn up the incline or cam q, compressing the spring and forcing the piston back, so that the face of the piston at f^2 does not come in contact with the finger f^3 until the bolt is pushed forward, and the sectional screws commence to engage in each other. The pressure of the spring upon the piston is then transferred from the cam on to the finger, consequently in opening or closing the breech there is no force required. The bolt is allowed to move in and out by means of an oblong slot ×, ×, in which the end of the finger f^3 works. By making the coupling of the screw-support, with the bolt, behind the finger, I do away with the necessity of a cross-slot to allow the bolt to work on the finger, by which I strengthen the bolt very materially. I strengthen the bolt additionally by the cover and bolt being in one piece, the cover serving for a

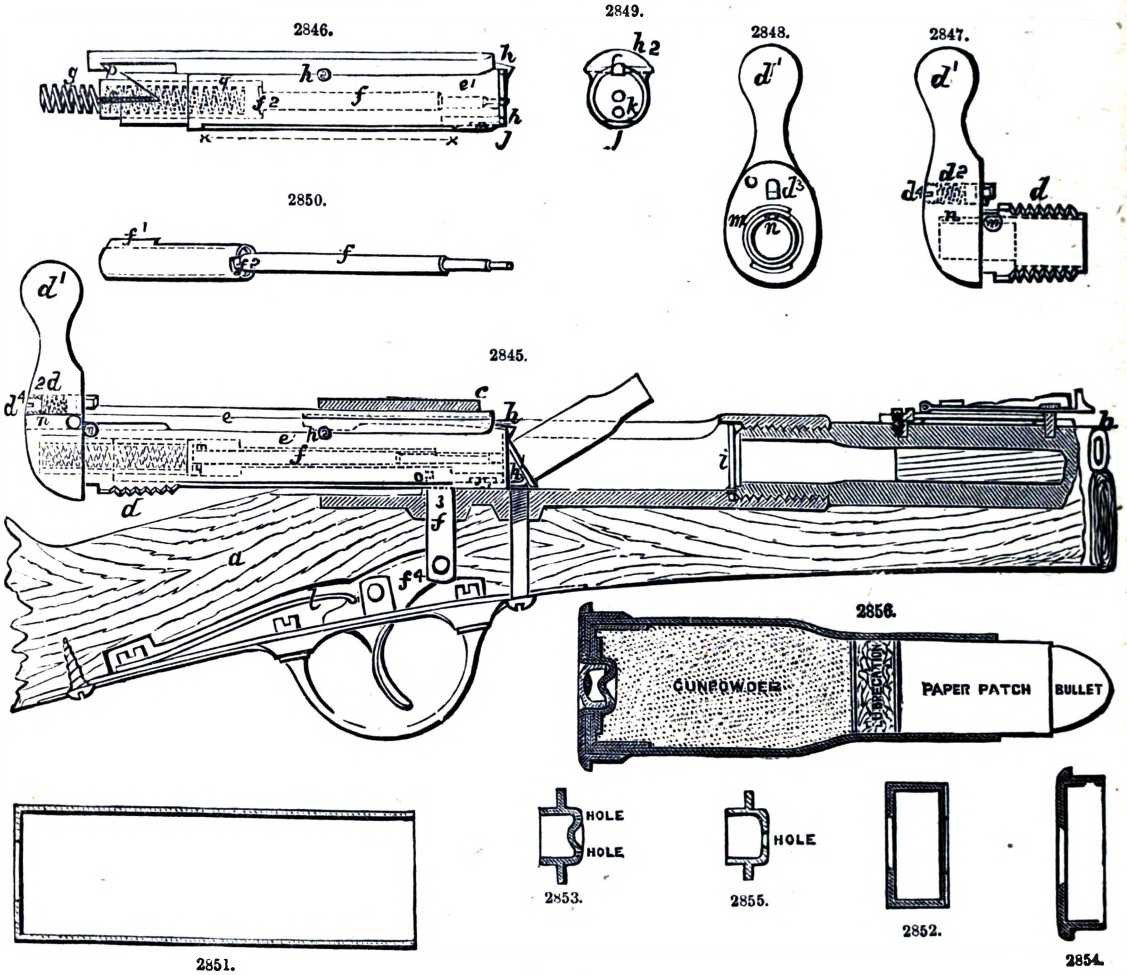

strap in keeping together the bolt and screw-support. In the cover from h to h^2 I make a hole, as seen by dotted lines; I take a wire the size of the hole and form an extractor, a cross-pin h^2 in the cover e passes partially through the extractor and retains it in place. The pin h^1 being longer than the hole in which it works, projects into the slot ×, ×, so that when the bolt is pulled sharply out the end of the pin h^1 strikes against the finger f^3, is driven forward, strikes the head of the cartridge, and expels it from the chamber of the breech, as indicated in Fig. 2845. Upon the pin h^1 there is a flat, and in the under-side of the bolt there is a set screw, the point of which passes up and on to this flat, on the pin h^1, allows the pin to move in the hole, but prevents it from coming out. The breech is formed so as to allow the bolt and cover to pass in and out; a strap running from c to h, Fig. 2845, passing over the cover, gives the necessary strength. An opening is cut in the breech in front of the strap to allow access for a cartridge in and out of the chamber of the breech, which opening is filled up by the cover e when in place, see Fig. 2844. In order to prevent

the arm from being fired until the bolt is entirely screwed up, I groove the end of the piston, and into this groove I cut an opening the thickness of the finger at f^2, and on the finger f^3 at o I cut a groove corresponding to the groove in the piston, which engage each other when the bolt is pushed home and the lever turned into the position seen at Fig. 2844. The opening in the piston f^2 is then brought opposite the finger f^3, the finger is then free to be pulled down by the trigger f^4. The piston is then released and is forced forward by the spiral spring g delivering a sharp blow on the cap; this blow ignites the fulminate and fires the charge. In order to carry the arm with safety when loaded and the breech closed, a bolt on the outside rear-end of the breech, resembling the bolt of a door, is made to enter a hole in the lever, which prevents the lever from turning, and while in that position the tongue and groove on the finger f^3 and piston f^2 engage each other, and prevent the possibility of firing the arm. To fire the arm remove the bolt out of the hole in the lever, turn the lever until the screw-support is entirely screwed up, and the arm is again ready to fire. The safety against premature discharge of the arm is not depending on the tongue and groove on the finger and piston; the end of the rib f^1 on the piston would come in contact with the cam q on the bolt before the point of the piston struck the cap, should the trigger be pulled before the breech-bolt was entirely screwed up, which makes the arm doubly safe. Should damaged cartridges be used, in order to prevent gas-escape from coming in the face and eyes of the person firing the arm and from clogging the bolt, thereby preventing its free action, I make a groove i in the breech at the end of the barrel. Through the breech I make a number of holes into this groove, as seen at i^1, Fig. 2844, the gas escaping from the damaged cartridges enters this groove i and out through the holes i^1 in the breech. I form a lip on the end of the barrel, Fig. 2845, which I bevel off. I also bevel off the under-side of the bolt j, as seen at Figs. 2845, 2846, and fit the end of bolt close up to the end of the barrel. The bevelled lip on the barrel allows the cartridge when placed in the chamber of the breech to slide into the chamber of the barrel by the forward motion of the bolt, without the necessity of entering the cartridge by hand into the chamber of the barrel, which very much facilitates the loading of the arm. The end of the bolt being recessed forms a support for the head of the cartridge, and prevents it from dropping down from the hook of the extractor while it is being pulled out of the chamber of the barrel, and expelled therefrom by being struck by the pin h^1 in the bolt in the manner described. I, says Burton, make my cartridge case with the base thereon of felt by one and the same process, after the manner of making felt hats, or by any other suitable means; the base being formed smooth and even can be more securely riveted to the metal base, Fig. 2854, than though the end of the case was turned round to form a base: the case may be made of sheet brass or other metal if desired. The rivet, Figs. 2853 and 2855, is made of brass or other suitable metal, Fig. 2853, to form an anvil, but the rivet, Fig. 2855, may be used with a loose anvil if preferred. In putting together the different parts of the cartridge, I place the rivet, Figs. 2853 or 2855, in the metal cup, Fig. 2852, and solder them together to prevent the gas escaping between them, and place them in the cartridge case. I place the base or head, Fig. 2854, on the outside, and turn the ends of the rivet over, riveting the whole firmly together, in the manner seen at Fig. 2856.

The Prussian Needle-Gun, Fig. 2857.—This fire-arm does not possess in a high degree the qualifications (A), (B); it possesses (I), but is totally deficient in (C), (D), (E), (F), (G), (H). A is the needle-bolt furnished with projections $a\,a'$; the hinder part passes through a spiral spring.

2857.

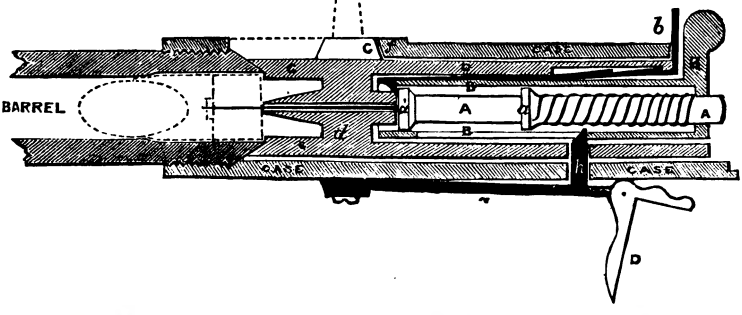

B B is the lock for drawing the needle-bolt back; it is in the form of a little tube with a projecting *thumb-piece* at one end, and a little tooth or catch (catching the projection a' of the needle-bolt) at the other; it is, moreover, held in its place by the locking spring b, but can be drawn back when b is pressed down.

C C is the chamber, also tubular, in which is fixed the needle-guide d. This chamber slides backwards and forwards in the outer case, by an action precisely similar to a street-door bolt, and it is furnished on the outside with a knob or handle by which to move it, bolt-fashion, a slot being cut lengthwise in it to allow it to pass the catch h. Its bevelled or conical end exactly fits the corresponding bevelled or conical end of the barrel, and it is forced into close contact with the latter by a sidewise motion of the knob, which motion, by thrusting the base of the knob c against the slightly inclined edge f of a slot in the outer case, jams the two bevelled surfaces together, and thus tightly closes the breech.

D is the trigger acting upon the spring g, and thus upon the catch h. The upper surface of the

trigger's horizontal arm takes its purchase against the under-side of the case, and is furnished with three knuckles or points of pressure; according as any one of these knuckles is pressed against the case (by pull upon the trigger), so will the catch *h* be drawn down to a greater distance. The first one is in bearing when the gun is out of use, or immediately after firing; when the second or middle one is brought to bear, the catch *h* is drawn down sufficiently to allow the needle-bolt shoulder *a* to pass over it; when the third is brought to bear, *h* is so far withdrawn that the whole of the lock-tube B B will pass over it, so that a soldier can, if necessary, disable his gun in a moment; if he has to retreat, leaving his gun behind him, he merely pulls the trigger very hard and draws B B out by the thumb-piece, and he leaves behind him an empty, useless barrel.

The various parts are thus manipulated in the process of loading and firing;—

First, the thumb is pressed upon the spring *b*, and by means of the thumb-piece the small lock-tube is drawn back, pulling with it—by means of the little tooth at the opposite end—the needle-bolt, till the shoulder *a* is caught behind the trigger-catch *h*. Then, by pulling the *knob* a little on one side, and at the same time pushing it towards the butt-end of the stock, the chamber C C, with the needle-guide, is slid back, and a clear space is left in that part of the case which is in our drawing occupied by the needle-guide. Through the opening thus made the cartridge is inserted into the end of the barrel, as shown by the dotted lines in the diagram. The chamber is then bolted up again, and the thumb-piece (and so the lock) is pushed forward to its original position. The position of things is then just as shown, with the exception that the needle-bolt, and with it the needle, is held back by the shoulder *a*, catching against the trigger-detent *h*, the spiral spring being of course compressed or in tension. The gun is then ready for firing, the trigger is pulled, *h* is drawn down, and the spring, released, darts the needle through the guide into the cartridge, the blunt end of the needle sharply striking the fulminate and thus igniting the charge.

The barrel of the gun is, in the latest pattern, 32 in. long and $\frac{6}{10}$ of an inch bore, the breech end being widened out to admit the cartridge easily; and it is rifled with four grooves, $\frac{3}{100}$ of an inch deep, the rifling taking one turn in 28½ in. The total weight of the gun, without the sword-bayonet, is 10¾ lbs.

The chief objections to the needle-gun are doubtless the danger attending the transportation of its paper cartridge, and the delicacy and complication of its mechanical arrangements. The cartridge, unlike the metallic, does not assist in any way to prevent the escape of gas breechwards, so the junction of the chamber-closer or breech-bolt with the barrel must be a perfect mechanical fit, like the safety-valve of a steam-boiler. If a little sand were to get into the joint, an injurious escape of gas would be inevitable.

The Peabody Gun is represented in section, Fig. 2858. A A is the breech-block hinged on the pin B; C is the pin, or striker, which transmits the blow from the hammer to the cartridge, and which is

2858.

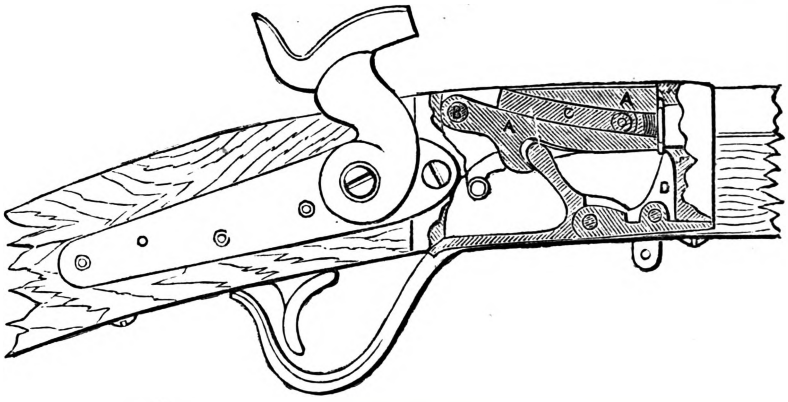

The Peabody Rifle.

capable of a small sliding motion, determined in amount by the pin passed through the oval hole O. In order to open the breech, the trigger-guard is drawn down, by which the breech-block A is depressed, and, catching on the lower part of the elbow-lever D, jerks out the empty cartridge case. By cocking the piece, inserting a fresh cartridge, and pulling up the guard-lever, the gun is again ready for firing. This arm is very deficient in the qualifications (A), (B), (C), (E), (G), and (I).

The gun of Albini and Braedlin, Fig. 2859, is on the Mont Storm system, calibre 0·462 in., adapted for central-fire cartridge. Breech arrangement put on as a shoe. The piston or striker passes through the longitudinal axis of the breech-block, and receives the blow of a horizontal bolt worked by the lock. The extractor consists of two simple forks hinged on the pin of the breech-block, a projecting catch on the back of the fork meeting a similar projection on the block, which, in being turned back, acts as a lever to extract the empty cartridge case. Ammunition: special cartridge, length 3·4 in., weight 689 grains; bullet cylindro-conoidal, with a basal cavity packed with chopped blotting-paper, weight 480 grains: charge of powder 68 grains. Weight of sixty rounds packed, 6 lbs. It will be seen by a reference to Fig. 2859 that the rifle is a combination of the Mont Storm and Snider systems, the arrangement of the extractor being the chief novelty. The breech-block B is here shown open, and the cartridge extractor E in the act of drawing the empty cartridge C. It possesses one or two improvements on the Snider rifle. For instance, if the cartridge does not go home fully, the breech of the Snider cannot be closed, whilst in the case of

the Braedlin the mere closing of the breech helps to force the cartridge to its place. Again, the axis of the striker is in a line with the axis of the barrel, and thus the cap in the cartridge, being struck more fairly, stands a better chance of ignition, and the protrusion of the exploded cap cannot, of course, prevent the breech from being opened. It is scarcely necessary to remark that this fire-arm is deficient of the qualifications (A), (B), (C), (E), (G).

2859.

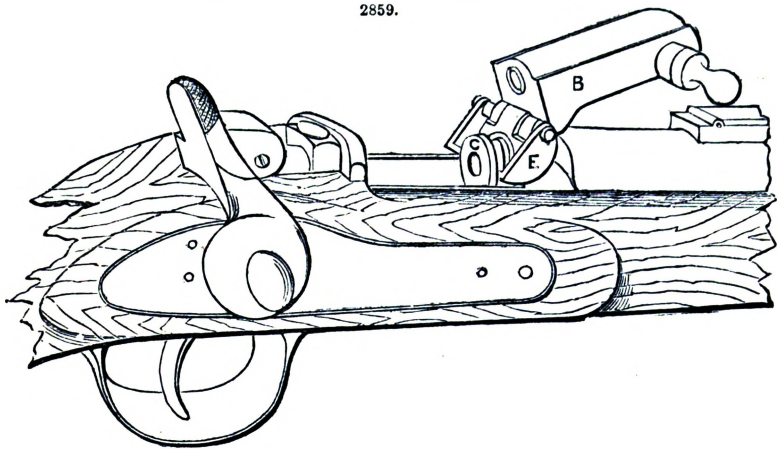

The Albini-Braedlin Gun.

The Chassepot Rifle, Fig. 2860, the weapon of the French army. This fire-arm does not possess in a high degree the qualifications marked (A), (B), and is totally deficient in those marked (C), (E), (F), (G), (H) This is a needle-gun. The fulminate is not in front, but in rear of the charge, and is

2860.

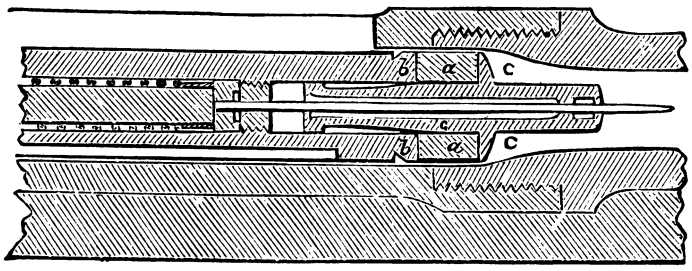

The Chassepot Rifle.

contained in an ordinary copper cap. The chief feature of the invention, however, consists in the contrivance adopted for preventing the escape of gas breechwards. The hermetic closing of the breech parts is obtained by the instantaneous compression, under the action of the explosion, of a vulcanized caoutchouc washer interposed between the front face of the breech-bolt and a flange, or shoulder, upon the needle-guide. The needle-guide being movable, and the front face of the bolt being fixed, the india-rubber washer is nipped between them. The washer and the flange or shoulder are of a little less diameter than the breech in which they are fitted, so as to facilitate their play therein, but the diameter of the front face of the breech-bolt is, as nearly as possible, equal to the inner diameter of the breech. When the explosion takes place, the pressure transmitted by the movable needle-guide to the washer is such, that the latter is compressed sufficiently to close hermetically the rear end of the barrel and thereby prevent all gas-escape. After the charge is fired, and the pressure removed, the washer, by virtue of its elasticity, returns to its natural position. The ring or washer is composed of three layers of different degrees of hardness, the two outward layers being of much harder substance than the centre one, so that on being pressed the intermediate layer, which is perfectly elastic, expands. A reference to Fig. 2860 will explain the nature of this breech-closing arrangement. The india-rubber ring *a* is compressed by the needle-guide C between the washers *c*, *b*, when the charge is ignited, and is therefore forced to fill the barrel in which, in its normal state, it is a loose fit.

The following particulars relate to the Chassepot rifle;—

	French measurement.	English measurement.
Weight	4 kilos. 50 grammes	8 lbs. 14 ozs. 13 drs.
Calibre	11 millimètres	·433 in.
Range	1000 mètres	1094 yds.
Weight of cartridge	31 grammes	478·4 grains.
Weight of ball	24 „	370·4 „
Weight of charge	5½ „	84·8 „
Number of grooves	4	

The Martini-Henry Rifle, Fig. 2836, in which *a*, barrel; *b*, body; *c*, block; *d*, block axis-pin; *e*, striker; *f*, main-spring; *g*, stop-nut; *h*, extractor; *i*, extractor axis-pin; *j*, rod and fore-end holder; *k*, rod and fore-end holder-screw; *l*, ramrod; *m*, stock fore-end; *n*, tumbler; *o*, lever; *p*, lever and tumbler axis-pin; *q*, trigger plate and guard; *r*, trigger; *s*, tumbler-rest; *t*, trigger and rest axis-pin; *u*, trigger and rest-spring; *v*, stock-butt; *w*, stock-bolt; *z*, lever catch-block spring and pin; A, locking bolt: B, thumb-piece

With regard to the so-called Martini gun, better known in the United States and Canada as the Peabody gun—in which places as well as in Switzerland, with this arm numerous accidents have occurred, and all trials with it have been unsatisfactory—the Woolwich committee on small arms, after two years' investigation, we should have said dodging, at great expense to the nation, recommended its adoption as the best arm for the British soldier. Without hesitation we proclaim this truth, the Martini rifle is the most costly and difficult arm to manufacture, and it is deficient in every essential point from (A) to (I), with the exception of (D) and (F).

Westley Richards' Rifle.—Fig. 2861 is a longitudinal section of a portion of a breech-loading fire-arm constructed on the Peabody system.

2861.

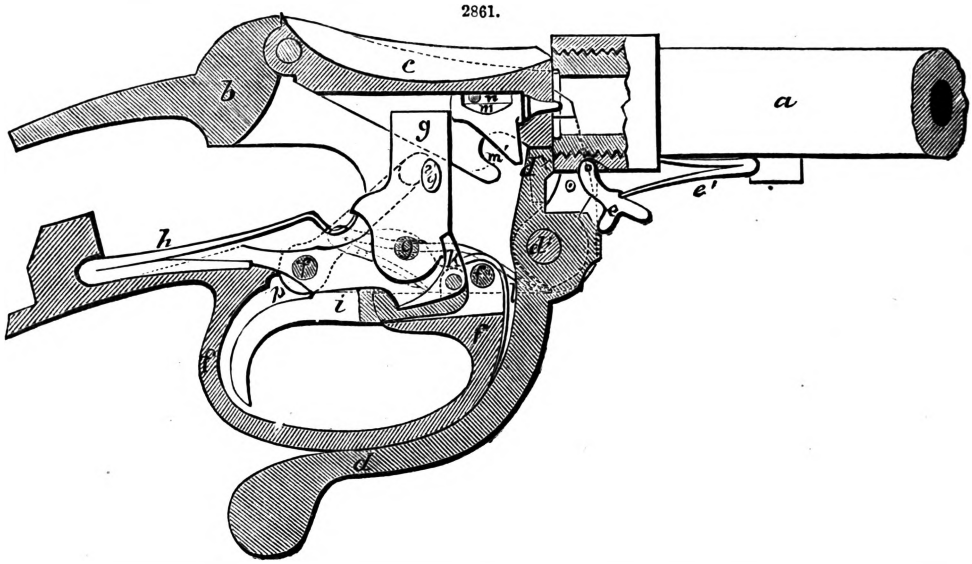

a is a portion of the barrel, and *b* the body or frame into the socket at the fore part of which the barrel is screwed; *c* is the drop-block jointed at its rear end to the body; *d* is the hand-lever for supporting and working the breech-block, it turns on a pin or axis a^1 carried by the side cheeks of the body; *e* is a small lever which by the spring e^1 is caused to bear on an incline on the boss of the hand-lever, giving the hand-lever a tendency to remain at either end of its course; *f* is the trigger plate and guard, it is fixed to the side cheeks of the body by pins f^1 and f^2; it carries the hammer *g* on the axis g^1, the main-spring *h*, the trigger *i*, and the sear *k*, which, as is shown, is mounted on the same pin as the trigger. The main-spring may either press directly on the hammer or act upon it through a swivel or link. The sear-spring *l* is also carried by the trigger plate and guard; *m* is the striker capable of sliding in a straight line in a hole bored and slotted for it in the breech-block *c*. The stop-pin *n* limits the motion of the striker in a backward direction and prevents it escaping from the block; m^1 is a projection on the striker with which, in opening the breech, the inner end or arm $d^\times$ of the hand-lever *d* comes in contact, the striker is thus pushed back a short distance, sufficient to retire its nose beneath the face of the breech-block *c*, before the lever acts on the block to cause it to drop. The back of the striker pushes back the hammer until the breech is partly open, and then the sides of the drop-block act against projections g^2 on the hammer and carry it back until the full-cock bent upon it is caught by the sear. On shutting the breech the drop-block and striker return, leaving the hammer retained by the sear. On pressing the trigger, the sear-nose is lifted out of the bent and the hammer delivers its blow upon the striker and the cartridge is fired. *o* is the extractor, and *p* a level bolt for locking the trigger.

Of this gun we have only to add, that its imaginary improvements consist of a confused complication of its parts, and looks like an endeavour to evade the Peabody-Martini system, like which it is deficient in all the qualifications from (A) to (I), except (D) and (F).

The Remington Rifle.—Fig. 2835 is a side view of the breech.

In this rifle there is no essentially novel feature in the stock *a*, barrel *b*, or frame *c*. Remington in his specification observes, "I prefer to arrange the hammer *d* centrally behind the swinging breech-piece *e*, and to form the same with an extension d^1, which serves as a tumbler, and which is provided with notches 1, 2, for the trigger *f* to take into, but if desired a separate tumbler may be used, the hammer being then arranged at the side of the breech. The breech-piece *e* which is curved on its upper surface to allow it to swing down in front of the hammer *d* (or the tumbler) is bored or recessed from the rear to within a slight distance of its front surface e^1 which lies in contact with the cartridge, this surface being perforated at e^2 to form a passage for the needle *g*. The surface e^1 of the breech-piece is quite plain or flat, and closes the breech perfectly without any valve or gas-check such as is ordinarily employed in breech-loading arms when paper cartridges are used.

The needle g is fixed by screwing or otherwise in the bolt or pin h which works in the recess or cavity e^3 in the breech-block e; the said pin is kept back in the proper position to be struck by the hammer by a spiral spring i, and in order that this spring may not occupy any portion of the space in the said cavity in front of the bolt h, and shall leave the same clear for the advance of the bolt when the same and the needle are driven forward, I make the said bolt hollow and insert the spring within the same. By this means the bolt h can be driven forward till its end h^1 is in contact or nearly so with the end of the recess e^3. To allow the bolt h to be thus made hollow, the needle g, instead of being in the centre, is fixed near the periphery of the said bolt and (as I now construct the arm) above the centre of the same. In order that the bolt h may not be driven too far forward the breech-piece at the back of the recess or chamber e^3 is formed to act as a stop to the hammer d. To drive the needle forward the required distance, it is necessary in this arrangement of parts that the end of the hammer should follow the bolt some distance in the recess e^3. For this purpose I form the end of the said hammer with a circular or other shaped piece d^2, which projects beyond the shoulder d^3 and enters the recess, the said piece being of such a length that the bolt and needle are driven far enough forward to effect the explosion of the cartridge before the hammer is stopped. The escape of the bolt or pin h from the recess e^3 is prevented by a screw or pin e^4 which is passed through the side of the breech-piece e, the front end of the bolt being formed with a stop h^1 which will not pass over the said screw. It is desirable that the distance between the centre of the barrel b and the axle-pin j of the breech-piece e should be as short as possible, and for this purpose the circular part e^5 of the breech-piece which surrounds the said axle-pin is made concave at e^6 on the side adjacent to the barrel b. The lower part of the end of the barrel which lies in this concave part e^6 has a portion of its exterior surface cut away at b^1 to make it conform to the shape of the concavity e^6 in the breech-piece. A compact arrangement of parts is thus obtained in which the free movement of the breech-piece is not affected by its close proximity to the barrel." But it is affected when 85 grs. of powder and 480 grs. of lead are used; for, the lower part of the barrel being cut away (to make room for the joint of the breech-block), the force of the explosion presses that part down on the joint of the block, and prevents the block from being drawn or turned back to extract the cartridge by the pressure of the hand; see test IX., page 1471. "The pin j and the hammer-pin k are passed through both sides of the frame c."

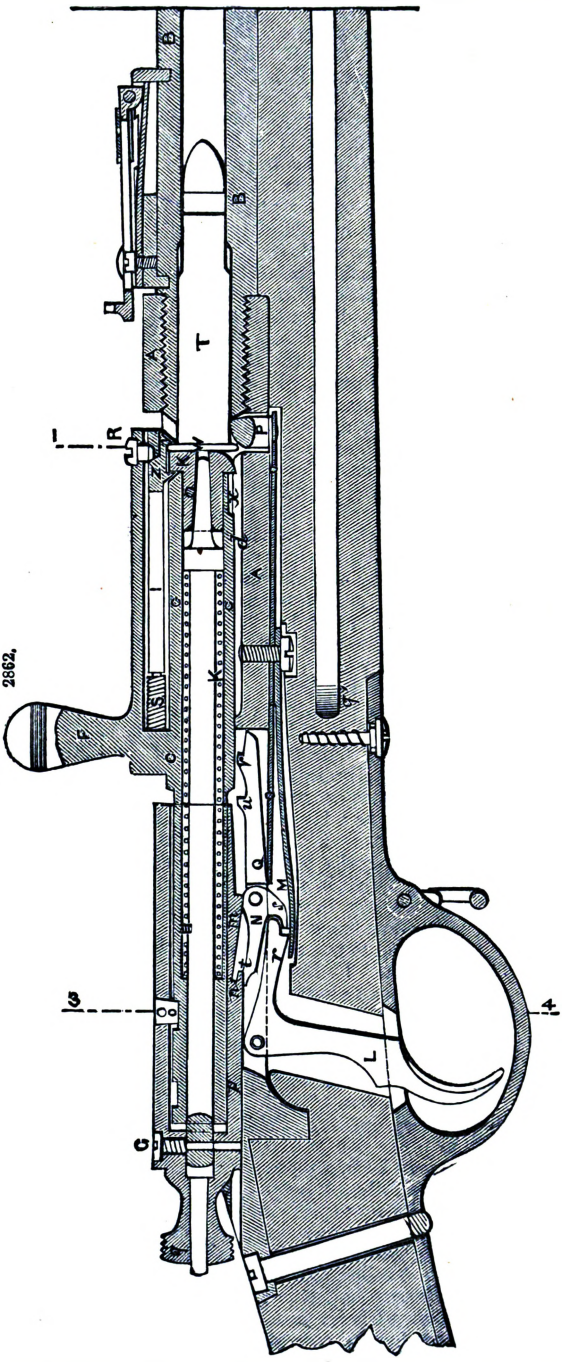

This arm of Remington is greatly deficient in all our requirements marked (A) to (I).

The so-called Berdan gun, Fig. 2862, is merely a clumsy attempt to evade the patents of Bethel Burton. Fig. 2862 is a longitudinal vertical section of this breech-loader taken along the centre line of the barrel. The open part of the breech A which receives the cartridge is provided at its lower part with a cavity d in which the dirt and dust may be received. The extreme faces of this receptacle are provided at f and g with two inclined planes. It may be remarked also that the closing projection b of the movable breech C is on the one hand prolonged in front sufficiently far to afford space for the screw R which secures the cartridge

extractor above the hook of the latter, and on the other hand to form a stop for the bolt, which stop shall come in contact with the fixed breech when this bolt is pushed forward. The long collar or socket D which encloses the bolt C is shown of sufficient length to enable the spring H of the striker to be long enough to ensure a regular and certain action.

The trigger-spring M operates on the end *r* of the shorter arm of the trigger, which in its turn transmits its action to the shorter arm *s* of the curved tumbler or lever N. This lever is so constructed as to enter the bottom of the full-cock bent or notch *m* during the forward movement of the latter by reason of the end *t* of the tumbler N being situate above the axis on which the lever itself works. Care has also been taken to provide the half-cock bent or notch *n* with a heel, which prevents the end *t* of the tumbler or lever N from being disengaged therefrom by any manipulation of the trigger L. The rib or projection *p* in which are formed the bents *m* and *n* is cut with an inclined surface, so as to ensure the free play of the bolt C and the entrance of the point *t* into the bents. To the under-side of the breech-piece A there is fixed a blade-spring O, which at one end terminates in a curved surface P intended to facilitate the automatic introduction of the cartridge into the barrel, whilst the other extremity of the spring tends constantly to elevate the piece Q, which is provided with projections *u* and *v*; the projection *u*, Fig. 2862, is intended to restrict or limit the recoil of the bolt C by entering a notch *x* formed on the under-side thereof behind the enlarged extremity K; thus it is simply requisite to press upon the end of the piece in order to remove or detach the bolt or sliding breech as well as the parts connected therewith; the projection *u* serves also by entering the notch *x* to prevent the bolt C from sliding forward and closing the breech when the muzzle of the gun is inclined downwards. The second projection *v* of the piece serves as a stop or obstruction to the flange of the cartridge when it is drawn back by the extractor I, and thus facilitates its automatic discharge from the arm. The extractor I is contained in the closing projection of the bolt C. It is maintained in its place by a screw R, against which it is constantly pressed by a helical spring S disposed at the rear end of the part. The dimensions of the chamber which encloses the extractor are such that the latter may have sufficient play therein to allow it to seize the flange *w* of the cartridge when moved forward with the bolt at the time of closing the breech. In order to keep the catch of the extractor lowered upon the flange *w* during the whole time of opening the breech the upper surface of the catch is formed with an inclination *z* bearing against the screw R, which thus serves to regulate the position of the extractor in its sheath or chamber. Another inclined surface *y* causes the extractor to mount over the flange *w* of the cartridge case T at the moment the catch or claw encounters the flange when forcing the cartridge into the barrel.

We describe this arm, not for its merits, but because it is a good specimen out of the many we have examined, to show how the would-be inventor of a breech-loading fire-arm appropriates to himself the ingenuity of others; such cases fully represent how deficient are our Patent laws, which grant patents for the same inventions over and over again, thus turning the Patent Office into a mock-auction shop, and thus enabling unscrupulous persons to set aside the honest meritorious inventor. This arm is totally deficient in (A), (B), (C), (E), (F), and (G).

Fig. 2863 represents how the parts of J. H. Burton's gun are combined; it is a longitudinal section. *a* shows a portion of the stock; *b*, a portion of the barrel; *c* is the sight; *d* is the shoe in the cavity (between the breech d^1 and the bridge d^2) of which the cartridge is placed. The cartridge is forced into position for firing in the breech end of the barrel by the breech-bolt *e*; this breech-bolt is formed to slide and turn easily in the shoe *d* and its fore end or face or head e^1 is by preference formed of hardened steel or of case-hardened iron and to screw into that end of the breech-bolt. To facilitate the turning of this part e^1 for its removal or replacement it is formed with a series of holes or recesses e^2 in its periphery adapted to receive the end of any suitable pin to act for the time as a lever in turning that piece e^1 for screwing it into or unscrewing it from the main part of the breech-bolt *e*. *f* is the hammer, in the fore end of which is fitted the striking pin *g* for exploding the cartridge and thereby firing the charge, as is well understood; *h* is the hammer-spring, which is of a helical form and rests at one end against the end of the chamber formed for it, as shown in the breech-bolt *e*, and at the other end it rests against the collar f^1 on the hammer, with a tendency to force the hammer forwards with an elastic force. The collar f^1 is formed to screw on to the end of the hammer *f* as a nut, facility for the application or adjustment of which is obtained by the head e^1 of the bolt *e* being movable. The end of the chamber in the bolt *e* thus acts as an abutment for one end of the helical hammer-spring *h*, whilst the nut f^1 acts as an abutment for the other end of it. This collar or nut f^1 is formed to touch the interior of the breech-bolt *e* at parts of its surface, the other parts of its surface being cut away to admit of the air contained in the chamber of the breech-bolt freely passing from one side to the other of this collar as it moves in that chamber with the movement of the hammer. The hammer *f* is formed with a strong fin or projection f^4, which when the parts are in the position for firing is capable of sliding in a longitudinal opening or slot provided for it in the breech-bolt *e*. The lower edge or surface of this fin or projection f^4 also passes into a groove i^1 formed for it in the rear extension *i* of the shoe *d*, or it may be in a plate separate from it. Across the lower edge or surface of this fin f^4 is also formed the full-cock notch 5 and the half-cock notch 6 to receive the nose j^1 of the sear *j*. The breech-bolt at its rear end is also cut away in order that when the hammer is drawn back so that the nose j^1 of the sear enters the notch 5, the fin or projection f^4 is out of the slot in the breech-bolt; the breech-bolt may then be turned partly round by acting on the handle e^5, so as to bring the projection e^6 coincident with the opening formed for its passage in the bridge d^2, and thereby admit of the breech-bolt being drawn back. The projection e^6 on the breech-bolt *e*, when the parts are in position, with its rear end abutting against the bridge d^2, serves to hold the breech-bolt with its face or head e^1 correctly in the breech end of the barrel, and this projection e^6 in connection with the bridge d^2 receives the shock of the discharge. In the turning and subsequent back movement of the breech-bolt the hammer passes from being held by the sear *j* to being held by its shoulder f^7, resting against the rear end of the breech-bolt, by which, although the hammer is held

as it were at full-cock, it is also so held by the rear end of the breech-bolt as to render it impossible for it to be impelled forward prematurely to explode the cartridge whilst the breech-bolt is in any position other than that for firing. The case of each discharged cartridge is after firing withdrawn from the barrel by means of the plate *l*, which is capable of sliding in a groove formed for it in the lower part of the shoe, and at one end this plate *l* is formed with a projection l^1 to catch on the projecting edge or rim of the cartridge case, and at the other end it is formed with another projection l^2 to pass into a compound longitudinal and transverse groove formed in the underside of the breech-bolt. The part e^7 of this compound groove is in a line parallel with the axis of the breech-bolt, and at its fore end a shoulder is formed to it by the head or face e^1; this part e^7 is of length sufficient to admit of the breech-bolt being withdrawn some distance before the extractor acts upon the cartridge case to withdraw it, and the momentum thus obtained by the breech-bolt renders the action upon the spent cartridge case more effective to withdraw it in the case of its sticking in the breech end of the barrel. The transverse portion of this groove serves to receive the projection l^2 and admit of the turning of the breech-bolt *e* when it is fully in its place in the rear or breech end of the barrel. A stop limiting the longitudinal motion of the breech-bolt backwards is thus provided by the projection l^2 on the rear end of the extractor acting in conjunction with the shoulder formed by the movable head e^1 of the breech-bolt, and the rear end or termination of the groove in the shoe in which the extractor slides. The sear *j* is supported to turn upon an axis j^2 carried by lugs projecting from the under-side of the shoe *d*. The lever j^3 of the sear is in position to be acted upon by the trigger *m*, and it is borne upon by the spring *n* also affixed to the shoe *d* with a tendency to bear the nose of the sear *j* towards the hammer in order that the sear may properly engage the tumbler notches 5 and 6 formed on the projecting fin f^4 of the hammer *f*. J. H. Burton's gun is totally deficient in (C), (E), (F), and is a combination of the Bethel Burton and the Chassepot.

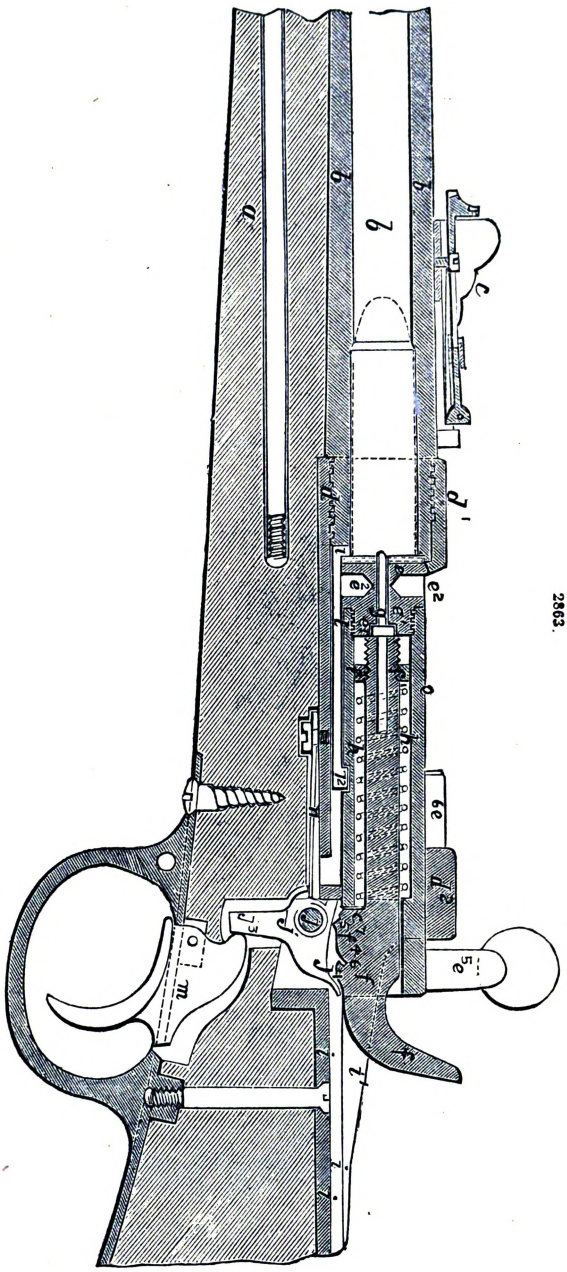

The Snider Gun, Figs. 2864 to 2866.

This fire-arm is deficient of the essential properties marked (A), (B), (E), (G).

The mechanism is extremely rude, the breech-block hinges upon a side pin and works backwards and forwards. It is kept in its place by a small spring stud *a*, Fig. 2866; this stud has been changed from time to time from the breech to the block and from the block to the breech.

The ignition is effected by means of a small piston or striker, which passes through the breech-block and which when in repose is flush with the face of the block. A blow of the hammer causes it to dart forward about a tenth of an inch into the cap which is fixed, as shown in Figs. 2865, 2866. The piston is returned by a spiral spring. To withdraw the empty cartridge case, a claw or extractor forms part of the breech-block. When the block is withdrawn the empty cartridge is necessarily drawn with it, and by canting the rifle sideways the case is thrown out. The extractor is returned by another spiral spring.

Snider's gun proposed in 1866 is illustrated by Figs. 2867 to 2870.

Fig. 2867 is a longitudinal section, and Fig. 2870 a plan of part of the breech. An opening is made at the rear end of the barrel to receive the breech-piece *c*, or this opening may be in a shoe

into which the barrel is screwed. The breech-piece which occupies this opening is attached to the barrel or shoe *f* by a hinge *e* affixed to its upper portion, surrounding the charge chamber so as to form a covering and admit of space within it for the movement of a draw cartridge *g*, and which is placed and moves in a slot or groove formed therein. This draw cartridge is operated by means of a cog or ratchet *a* on it, acted upon by a corresponding cog or ratchet *b* on the movable part of the hinge *e* which is attached to the breech-piece *c*, so that after a charge has been fired the expended cartridge case will be withdrawn from the charge chamber *d* by the action of lifting or opening the breech-piece *c*, causing the cog or ratchet *b* on the hinge *e* to act on the ratchet of the draw cartridge, and forcing the latter against the head or rim of the cartridge case and thus withdraw it.

2864.

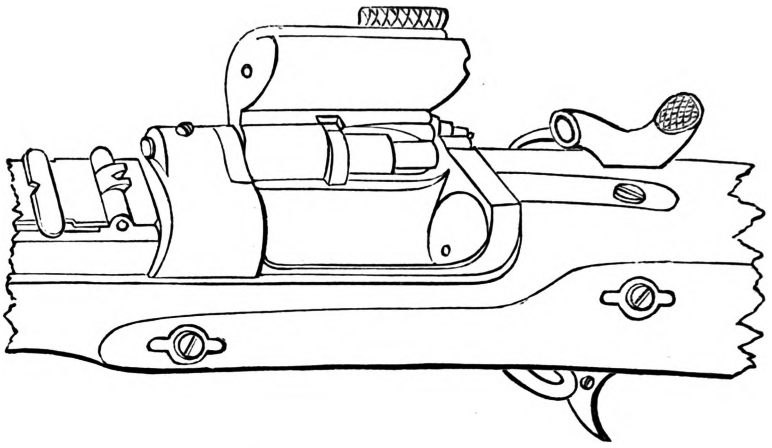

2865.

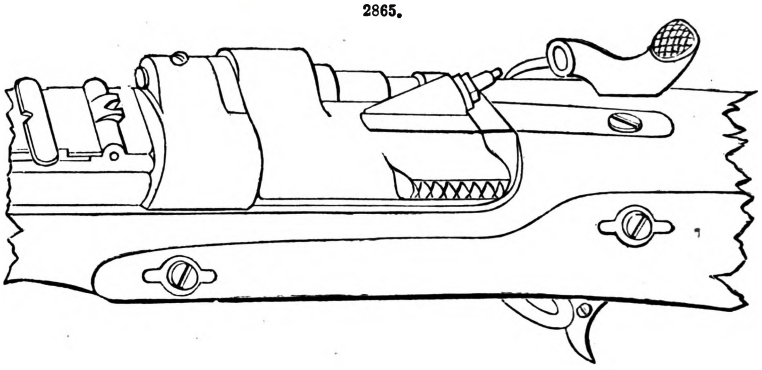

2866.

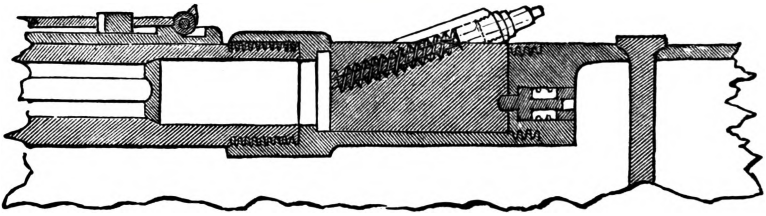

Fig. 2868 is a vertical section through the line *x*, *y*, of Fig. 2867, and Fig. 2869 a similar view through the line *z*, *z*¹. When the arm is charged it is locked and retained in place by means, before described, for locking the breech of fire-arms; see Figs. 2864 to 2866.

There is a hole made through the breech-support or plug, Fig. 2867. In this hole is placed a self-latching locking bolt, to this bolt is connected a shaft that works in a hole or slot in the tang of the breech-support, for the purpose of opening the breech.

These strictures might be continued to a great length on the vast number of fire-arms that we have examined, but we shorten our task by discarding all such contrivances that lack all our qualifications designated (A), (B), (C), (D), (E), (F), (G), (H), and (I).

The revolver or pistol, which is the smallest of breech-loading fire-arms, follows suit. From Colt down to Smith and Wesson there is no mechanical novelty worth attention. The revolving pistol comes under two heads, namely, the pocket pistol and the army pistol. Smith and Wesson's improvements over Colt chiefly consist in making arrangements so that metallic cartridges may be

used, indeed we give preference to Colt's system; to Colt is due the merit of perfecting this species of arm, all other pistol inventors only attempt to attain the same end in a more indirect manner and by greater complication

2867.

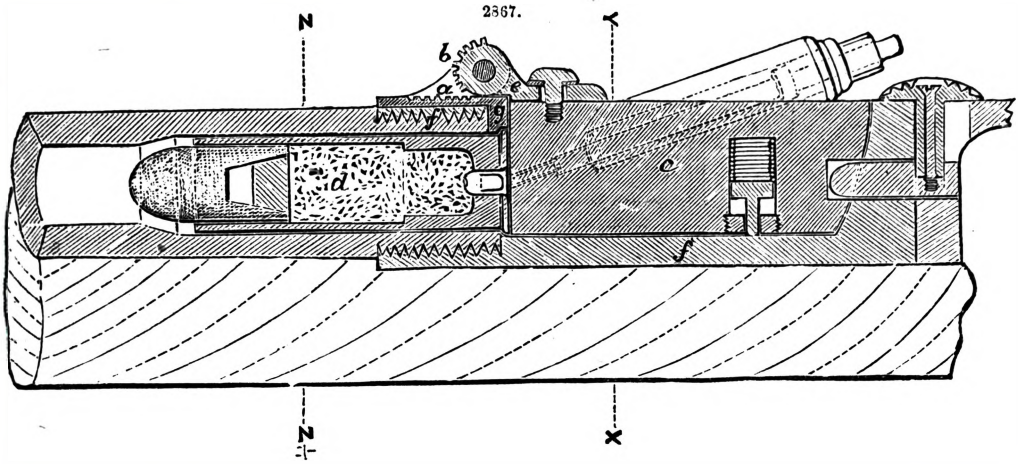

2868.

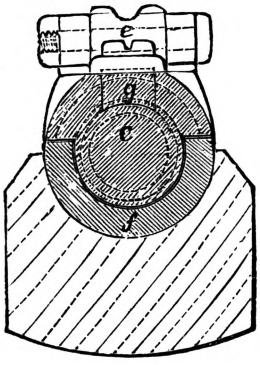

2869.

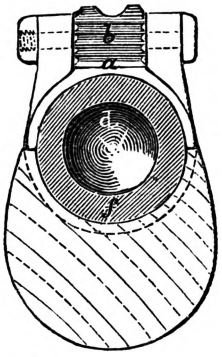

2870.

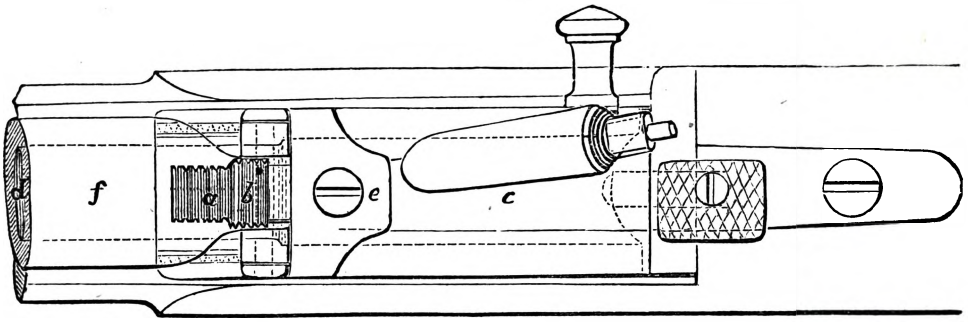

Albini's Revolver.—Fig. 2871 represents in side elevation, and Fig. 2872 in side elevation partly in longitudinal section, a repeating or revolving pistol constructed according to Albini's method of arrangement: Figs. 2873 to 2876 are parts of the same pistol, when detached.

a is the revolving cylinder; *b* is the solid frame of the pistol, and *c* is the barrel; the solid frame and barrel are made in one piece as usual. The cylinder *a* is mounted on the tubular axis *d*, upon which axis the cylinder *a* is capable of revolving to bring each of its chambers in succession in a line with the barrel *c*. The front end of the said tubular axis *d* is carried by the arm *e*, the lower horizontal part of which is jointed at e^2, e^3, to the side of the frame *b*; the axis *d* and arm *e* are shown separately in Fig. 2873. The said arm *e* moves in a vertical plane upon its joint, and the cylinder *a* is by the motion of the said arm capable of being turned out of or into the frame *b*, as illustrated in the drawing. In the tubular axis *d* is a rod *f* by which the extractor *g* is operated and the cylinder *a* locked to and released from the frame *b*, the rod *f* is shown separately in Fig. 2874; the said rod *f* is provided with a thumb-plate or handle f^2 by which it may be moved backwards and forwards in the hollow axis *d*. In the fore part of the frame *b* is a channel *h* in which the front end of the rod *f* works. The hole or channel *h* serves as a guide to the rod *f*, and

assists in locking the cylinder *a* in its frame. The side a^2 of the channel *h* is open, to permit of the removal by a lateral motion of the said rod *f* from the channel *h*, when the cylinder *a* is turned out

2871.

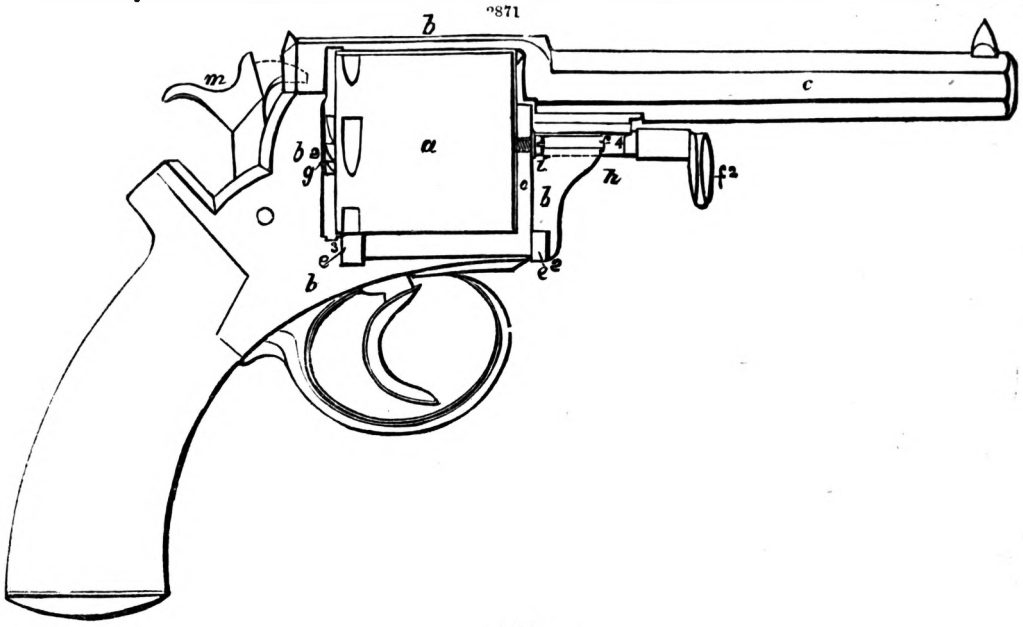

2872.

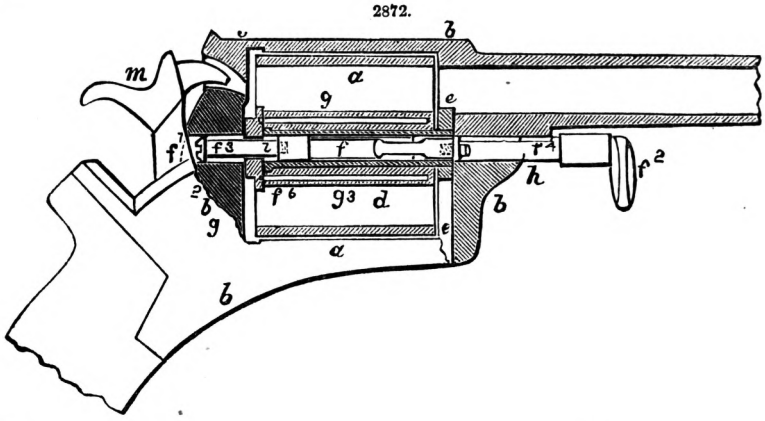

2873.

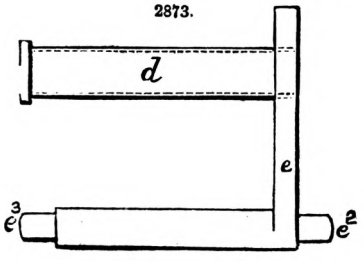

2874.

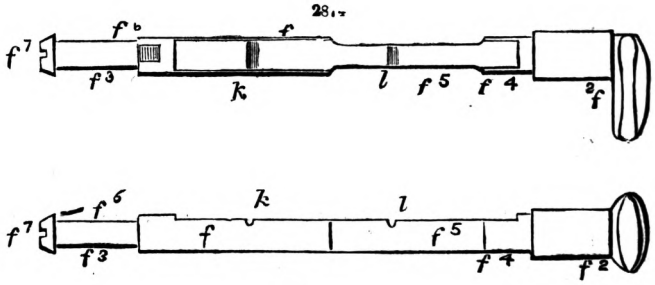

2875.

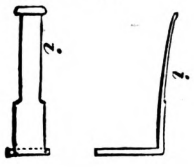

2876.

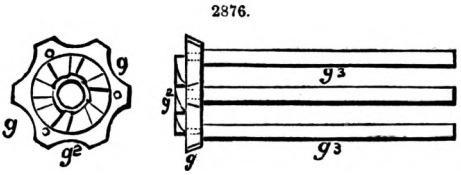

of the frame *b* on its jointed arm *e*. When the rod *f* is pushed forward, its fore end f^3 enters a hole b^2, Fig. 2872, in the back of the frame *b*, and securely fastens the cylinder in the frame. When

the rod is in this position the rear end f^4 is situated in the channel h, and the said part f^4 prevents the rod being drawn through the lateral opening h^2 of the channel h. When it is wished to release the cylinder a the rod f is pulled towards the muzzle end of the pistol, the front end f^3 of the rod is thereby withdrawn from the hole b^2, and the rear part f^4 is also removed from the channel h, when the cylinder a may be turned outwards upon its jointed arm e. When in the last-described position a cut-away part f^5 of the rod f is brought opposite the lateral opening h^2 of the channel h, and the said rod can pass through the said opening. The sliding motion of the rod f is limited by a spring-top i, Fig. 2875, within the tubular axis d engaging with one or other of two notches or depressions k, l, in the rod f; when the rod f is drawn forward to release the cylinder a, the stop i falls into the notch or depression k; and when the said rod is pushed outwards to operate the extractor, the said stop i drops into the notch or depression l; in either case the further motion of the rod is arrested. The extractor g, Fig. 2876, consists of a notched disk or plate having a ratchet g^2 at back, upon which ratchet the lock acts to propel forward the cylinder a. The extractor is connected to the cylinder a, and its motion transmitted to the cylinder a by means of the guide-rods g^3, g^3, sliding in holes in the said cylinder. The extractor g is pushed outwards from the cylinder a, when the rod f is pushed towards the back of the body by means of a shoulder f^6 on the said rod bearing against the inner face of the extractor, and the said extractor is pushed inwards to its place at the rear of the cylinder when the rod f is drawn towards the muzzle of the pistol by means of the head f^7 on the said rod bearing against the outer face of the extractor. When the parts of the pistol are in the respective positions represented in Figs. 2871, 2872, the said pistol is ready for discharge. After discharge, in order to extract the cases of the exploded cartridges and reload the pistol, the parts are manipulated as follows;—The hammer m is first raised to half-cock, the rod f is next pulled forward by its thumb-plate or handle f^2, so as to withdraw the front end f^3 from the back of the body or frame b, and bring the cut-away part f^5 opposite the lateral opening h^2 in the frame b.

Smith and Wesson's Revolver.—Fig. 2877 is a longitudinal section of this revolving fire-arm. Fig. 2878 is a similar section with the parts of the arm in a different position.

2877.

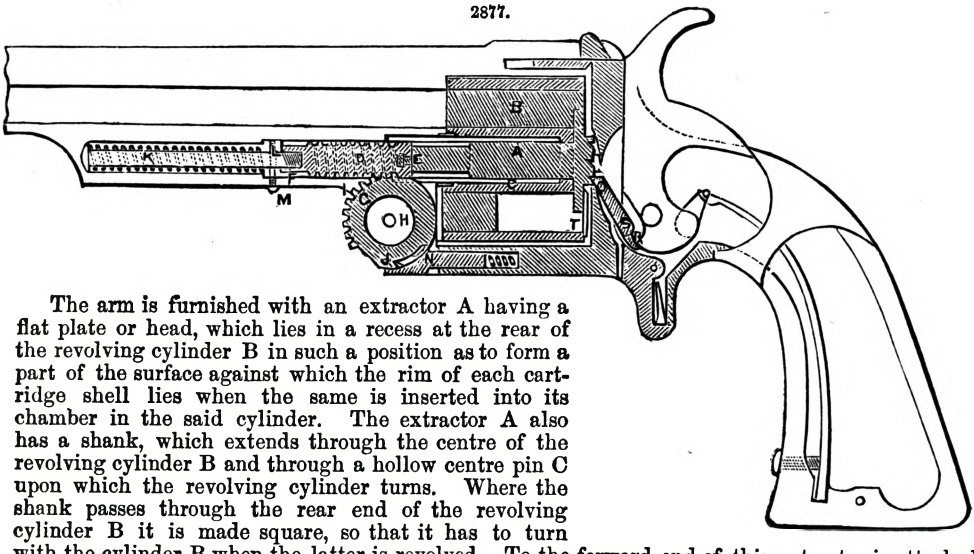

The arm is furnished with an extractor A having a flat plate or head, which lies in a recess at the rear of the revolving cylinder B in such a position as to form a part of the surface against which the rim of each cartridge shell lies when the same is inserted into its chamber in the said cylinder. The extractor A also has a shank, which extends through the centre of the revolving cylinder B and through a hollow centre pin C upon which the revolving cylinder turns. Where the shank passes through the rear end of the revolving cylinder B it is made square, so that it has to turn with the cylinder B when the latter is revolved. To the forward end of this extractor is attached a rack D by a coupling joint E which allows the extractor to revolve without turning the rack D. This latter may be made flat or may be a circular rod with the teeth cut entirely around it, as shown, and for many reasons the latter form is preferable. A chamber F is provided for this rack through the stock below the barrel and in a line with the centre of the revolving cylinder B. In order to operate the extractor by means of this rack, Smith places a toothed wheel G in the joint H in such a manner that it engages with the rack D above. The peculiarity of this pinion is that when the barrel is swung forward the pinion first revolves about one-eighth part of a turn, giving the cartridge shells room to clear the breech-block before they are started from the chambers of the revolving cylinder; the pinion is then caught and held by a pawl N at the lower side, the rack being consequently forced back or left behind, as shown in Fig. 2878, and with it the extractor, which as the barrel is turned farther forward on the hinge pushes out the shells, the head of the extractor catching under their flanges, as shown at T. A projection is formed on the stock in front of the pinion, and when the barrel is swung far enough for this projection I to strike against the head J of the pawl N and push it back, the pinion revolves freely and the rack flies forward to its former position, carrying with it the extractor, and also turning the pinion until it occupies its first place relative to the rack. In order to thus impel the rack forward when the pinion is released any suitably arranged spring may be used. In this instance Smith forms on the forward end of the rack a rod K, which has on its outer end a head and passes through a collar L made stationary by means of a set screw M in the chamber F at a point near the end of the rack when at rest. A spiral spring is coiled around this rod between its head and the collar, and when the rack is forced back towards the revolving cylinder the spring is compressed, its recoil restoring the rack when it is released. In this manner by merely throwing forward the barrel as far as it will go the shells are all extracted

and the extractor restored to its proper position for a new operation as soon as the barrel is returned to the breech.

In these fire-arms as heretofore constructed there has been no provision made for the pawl O, which in the ordinary construction projects beyond the face of the recoil-block in order to engage

2878.

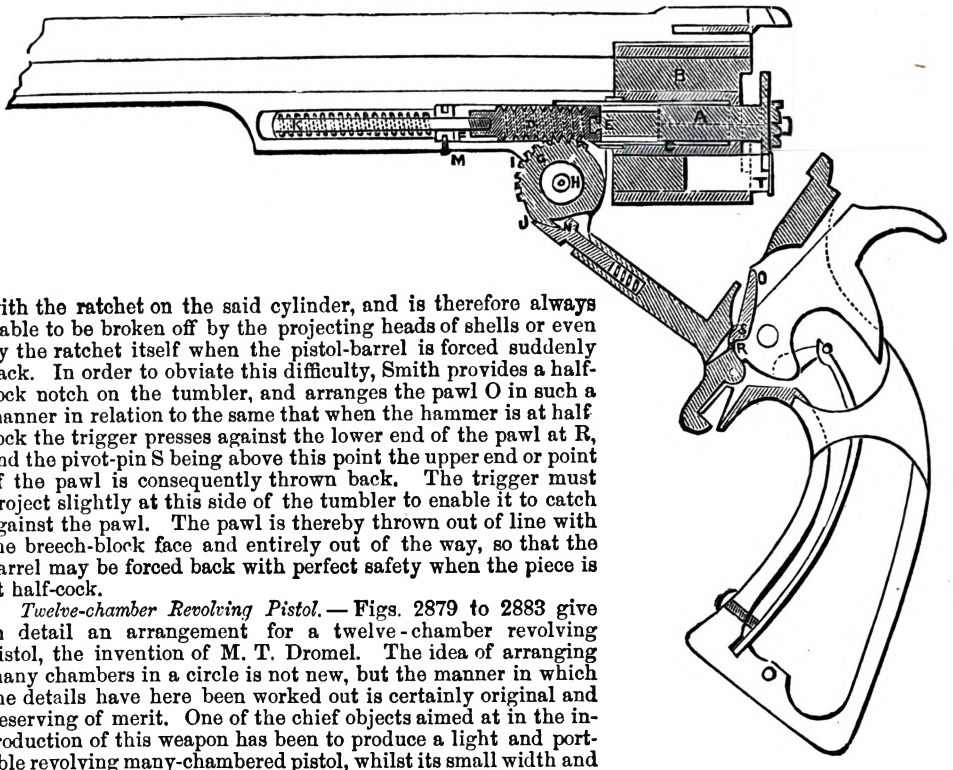

with the ratchet on the said cylinder, and is therefore always liable to be broken off by the projecting heads of shells or even by the ratchet itself when the pistol-barrel is forced suddenly back. In order to obviate this difficulty, Smith provides a half-cock notch on the tumbler, and arranges the pawl O in such a manner in relation to the same that when the hammer is at half cock the trigger presses against the lower end of the pawl at R, and the pivot-pin S being above this point the upper end or point of the pawl is consequently thrown back. The trigger must project slightly at this side of the tumbler to enable it to catch against the pawl. The pawl is thereby thrown out of line with the breech-block face and entirely out of the way, so that the barrel may be forced back with perfect safety when the piece is at half-cock.

Twelve-chamber Revolving Pistol. — Figs. 2879 to 2883 give in detail an arrangement for a twelve-chamber revolving pistol, the invention of M. T. Dromel. The idea of arranging many chambers in a circle is not new, but the manner in which the details have here been worked out is certainly original and deserving of merit. One of the chief objects aimed at in the introduction of this weapon has been to produce a light and portable revolving many-chambered pistol, whilst its small width and the absence of projecting points render it suited for carrying in the pocket, the sight at the end of the barrel being the only inconvenient part of the arrangement; but this might be dispensed with.

2879.

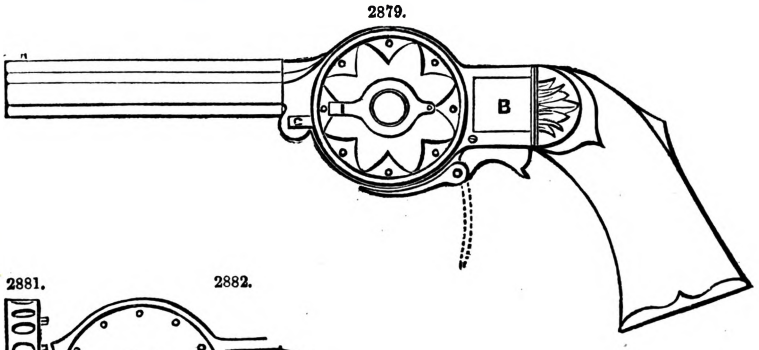

2880.

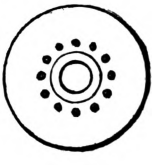

2881.

2882.

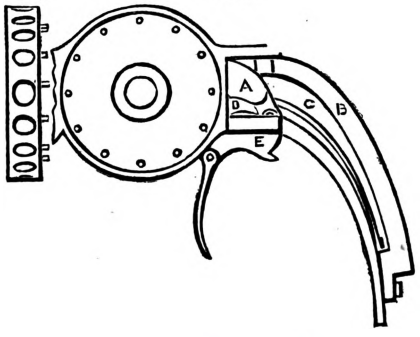

2883.

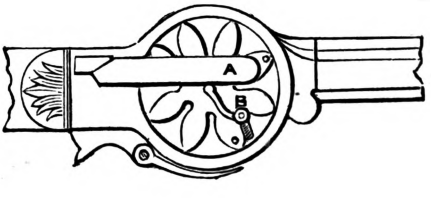

The circular chamber-piece being comparatively small, and easily shifted, a second chamber-piece ready loaded might with safety be carried in the pocket, and thus twenty-four charges might be

always available in cases of danger or emergency. Fig. 2879 shows the pistol complete. A is a catch closing the circular door, moving on a pivot at C, which holds the chamber-piece in its place; and B is a small slide, which draws out for the purpose of cleaning or repairing the lock. Figs. 2880, 2881, show the chamber-piece, Fig. 2882 shows the lock arrangement, and Fig. 2883, the opposite side of the pistol, with the hammer. In Fig. 2882, A is the principal part of the lock arrangement, which is attached by a joint to the trigger-block E. On pulling the trigger, the end of the trigger-block is elevated, and thus throws the piece A forward, which, pressing against a small projection on the hammer, raises it, draws out the point which enters one of the small holes, shown in Fig. 2880, whilst it at the same time presses against one of the small projections shown in Fig. 2882, and causes the chamber-piece to revolve. As soon as the next chamber comes opposite to the barrel, the hammer is released, and the spring B forces it powerfully back, when its point enters the next hole and explodes the cartridge, which contains its own cap; and as soon as the trigger is released the spring C draws back the piece A, whilst the smaller spring D gives its point a slight elevation, and thus raises it so that on the next discharge the point of A shoots out above the next point on the chamber-piece. In Fig. 2883, A is the hammer, from the end of which a small point projects, which enters holes shown in Fig. 2880, to explode the charge, whilst the small piece B is for the purpose of enabling the pistol to be carried safely in the pocket when loaded; for by raising the hammer and elevating B, so that the point on A passes through the hole in B, it is slightly raised away from the cartridge, and cannot, therefore, explode it.

The Magazine gun of Bethel Burton, illustrated by Figs. 2884, 2885, differs only from his other gun, Figs. 2844, 2845, by the addition of a magazine a, $r\,r$, n, underneath the barrel, from which the cartridges are supplied. The mechanism for conveying the cartridges from the magazine up and into the chamber of the breech consists of a crank-lever m, a spring m^1 which steadies the motion of the lever; a tray or carrier m^2, and a feed-regulating spring n. Fig. 2885 is a cross-section, at × ×, in which the tray or carrier m^2 and lever m, and the feed-spring n are situated. r, r, represent the cartridges in the magazine a, $r\,r$; a cartridge r is a so shown on the tray m^2, just taken from the magazine ready to enter the chamber when pushed forward by the motion of the bolt as the breech is closed. When the charge is fired and the bolt again withdrawn, the empty shell is thrown out and another cartridge carried up ready to enter the barrel. The arrangement for firing this arm differs somewhat from Burton's general arrangement before described: in this case he adopts a lever k, Fig. 2884, for the purpose of gaining power over a bent spring k^1 which has to be kept in place. The trigger k^2 acts on the end or point of a lever of the third order which moves round a pin in the centre and is made fast to a projection on the under-side of the breech. The action of the finger j is the same as in the other gun, Fig. 2845.

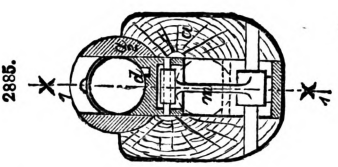

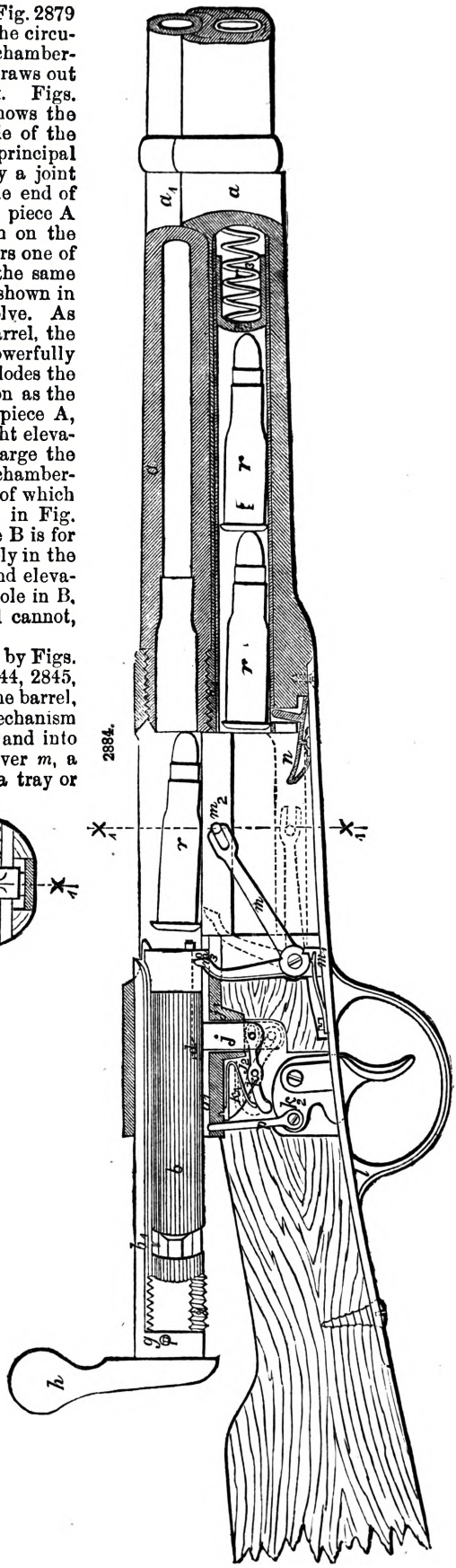

It is important to know that Burton's breech action, without being in any way altered, may, with his system of cartridge, be employed to work a magazine gun, and guns of different calibres.

Before speaking of cartridges we shall say something of the *fulminate of mercury*. This highly-explosive compound consists of protoxide of mercury united with an acid; *fulminic acid*, formed of cyanogen and oxygen, of which the formula is CyO or C_2NO; and is used for the manufacture of percussion caps. Fulminate of mercury

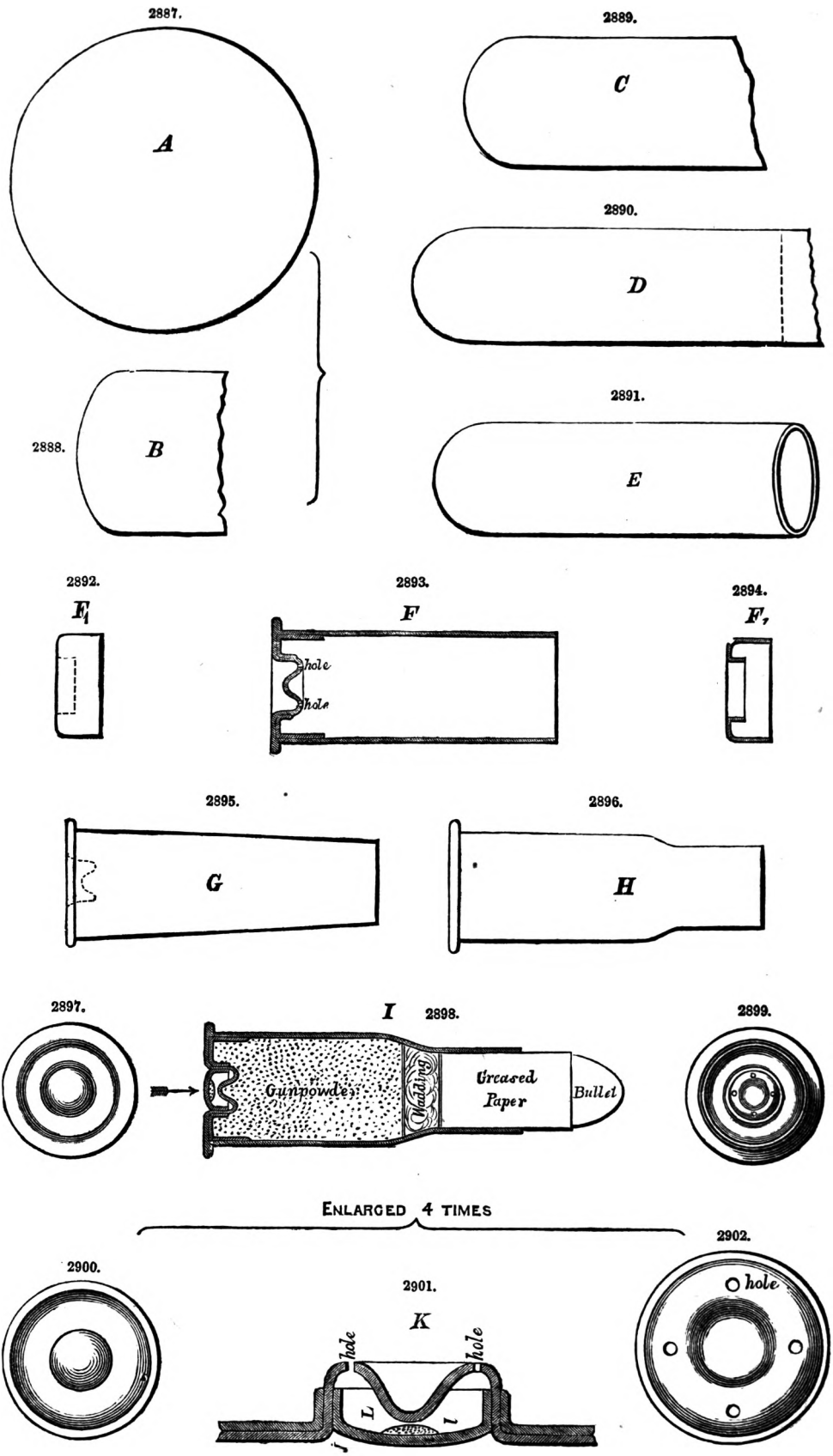
2887.
A
2888.
B
2889.
C
2890.
D
2891.
E
2892.
F1
2893.
F
hole
hole
2894.
F,
2895.
G
2896.
H
2897.
I
2898.
Gunpowder.
Wadding
Greased Paper
Bullet
2899.
ENLARGED 4 TIMES
2900.
2901.
K
hole
hole
L
l
2902.
hole

is prepared by causing alcohol to react on the acid proto-nitrate. A quantity of mercury is dissolved in 12 parts of nitric acid of 35° or 40° of Baumé, and 11 parts of alcohol at ·86 are gradually added to the solution; and while the temperature is slowly elevated, a lively reaction, accompanied by a copious evolution of reddish vapours, soon ensues, when the liquid, on cooling, deposits small crystals of a yellowish-white colour. Fulminate of mercury is one of the most explosive compounds known, and should be handled with great care, especially when it is dry, and it detonates when rubbed against a hard body. It dissolves readily in boiling water, but the greater portion of it is again deposited in crystals during cooling. The fulminating material of percussion caps is made of fulminate of mercury prepared as just stated, after having been washed in cold water. The substance is allowed to drain until it contains only about 20 per cent. of water, and is then mixed with $\frac{2}{5}$ of its weight of nitre, which mixture is ground on a marble table with a muller of guaiacum-wood. A small quantity of the paste is then placed in each copper cap and allowed to dry, the fulminating powder in the cap being often covered with a thin coat of varnish to preserve it from moisture. We shall speak of this again when we treat of other explosive compounds. See GUNPOWDER.

Cartridges.—Most rifles have been invented to suit the cartridge, instead of the cartridge being devised to suit the rifle. A cartridge containing the means of its own ignition, is by no means a recent contrivance. The needle-gun cartridge has been in use for many years, and though not metallic it contains its own ignition. But the metallic cartridge for weapons of war was first largely adopted in the American armies during the rebellion, and was the parent of many inventions in breech-loading small arms, both in Europe and America.

The cartridge of the Prussian needle-gun is peculiarly its own: made for this gun, it can only be used in it or in a gun having a needle arrangement to reach the fulminate through the powder. It consists mainly of four parts, not enclosed in a metallic, but a paper cover. These parts are the powder, the fulminating cap, the carrier-wad, and the bullet. The latter is of an acorn shape, and weighs about an ounce, and the charge of powder is seventy-six grains.

Referring to Fig. 2886, the distinguishing features of this cartridge are the carrier-wad *w*, and the cap *c*. The carrier-wad is formed of strips of paper moulded into the proper shape by heavy pressure, and its uses are as follows;—It holds the cap *c* containing the fulminating compound, protecting it from chemical influence or other injury; it receives the first impulse of the explosion and transmits it to the bullet, thereby economizing the force of the powder: it is compressed into the grooves of the rifling, and thus imparts a rotary motion to the bullet, which does not itself touch the barrel, and hence the grooves never get clogged with lead; finally, it cleanses the barrel at every discharge of the gun, but the friction is very great. The wad accompanies the bullet through some 50 or 60 yds. of its flight, and about 20 yds. from the gun it strikes a target about 3 or 4 in. below the bullet-mark, and at this distance will pierce a pine board of over half an inch in thickness, so that, at short range, the gun may be said to carry two projectiles. This, however, may not always be an advantage, as in the case of firing over a line of troops at some distance in front, the wad might kill or wound a friend instead of a foe. The fulminate of the needle-gun cartridge was at one time believed to be kept a secret, but it is now generally known to consist of a mixture of chlorate of potash, antimony, and sulphur, in the proportions of five to three, to two of the respective chemicals. As already stated, the cartridge is enveloped in a paper case: this case is almost, if not entirely, consumed by the combustion of the powder, and to ensure its complete consumption a certain amount of air is provided for by the air-chamber or cavity surrounding the fore part of the needle-guide, hence there is no empty cartridge to take out of the gun before reloading. The ignition of the powder from the front is, however, the great feature in the needle-gun, as by this means it is all consumed and rendered effective.

2886.

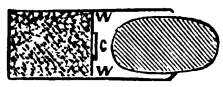

The Needle-gun Cartridge.

The process of making Bethel Burton's bottle-necked cartridge from solid brass or copper is illustrated by Figs. 2887 to 2902. A is a blank cut from a sheet of metal in a double-action press; while the blank is in the press a second punch draws it into the form B by forcing it through a die. B is then taken to a single-action press, in which it is again drawn and made to assume the forms C, D. The case is then cut to a length E by what is called a cutting-off machine. It is then put into another machine, termed a header, which forms the flange or base, as seen in Figs. 2892 to 2899; a cup is then formed in the head or base. The next process is to turn the bottom of this cup J in, to form an anvil on which the fulminate L *l* is placed and exploded. The holes marked in Fig. 2901, through which the fire passes to the powder, are then punched in another machine. A lining F′ is then placed on the inside base of the cartridge; this is intended to strengthen the base and to prevent the force of the explosion from rupturing the cartridge.

The cartridge case is then taken to a tapering press in which it receives the form G, Fig. 2895. The necking process is then performed, and the shape H, Fig. 2896, produced. K, Fig. 2901, is a section through the base, and I, Fig. 2898, a section through the cartridge, when complete. It must be observed that each process is performed after the case has been annealed.

FIRE-BOX. FR., *Boite à feu;* GER., *Feuerkasten;* ITAL., *Focolare Camera del fuoco;* SPAN., *Caja de fuego.*

See BOILER.

FIRE-BRIDGE. FR., *Pont de chauffe;* GER., *Feuerbrücke;* SPAN., *Directriz de fuegos.*

See BOILER. CHIMNEY. LOCOMOTIVE ENGINE. MARINE ENGINE.

FIRE-CLAY. FR., *Argile refractaire;* GER., *Feuerfester Thon;* ITAL., *Argilla apira;* SPAN., *Tierra refractaria.*

Fire-clay is a kind of clay chiefly pure silicate of alumina, capable of sustaining intense heat, and hence used in making fire-bricks.

COMPOSITION OF CLAY.

	Chinese Kaolin.	Stourbridge Fire-clay.	Pipe-clay.		Chinese Kaolin.	Stourbridge Fire-clay.	Pipe-clay.
Silica	50·5	64·1	53·7	Magnesia ..	0·8	0·9	..
Alumina ..	33·7	23·1	32·0	Potash, soda ..	1·9	..	..
Water	11·2	10·0	12·1				
Oxide of iron	1·8	1·8	1·4		99·9	99·9	99·6
Lime	..	..	0·4				

See FOUNDING AND CASTING. PORCELAIN. TERRA COTTA.

FIRE-ENGINE. FR., *Pompe à incendie;* GER., *Feuerspntze;* ITAL., *Tromba da incendio;* SPAN., *Bomba de incendios.*

Merryweather and Sons' Hand-power Fire-engine, Figs. 2903, 2904.—This engine is fitted with gun-

2903.

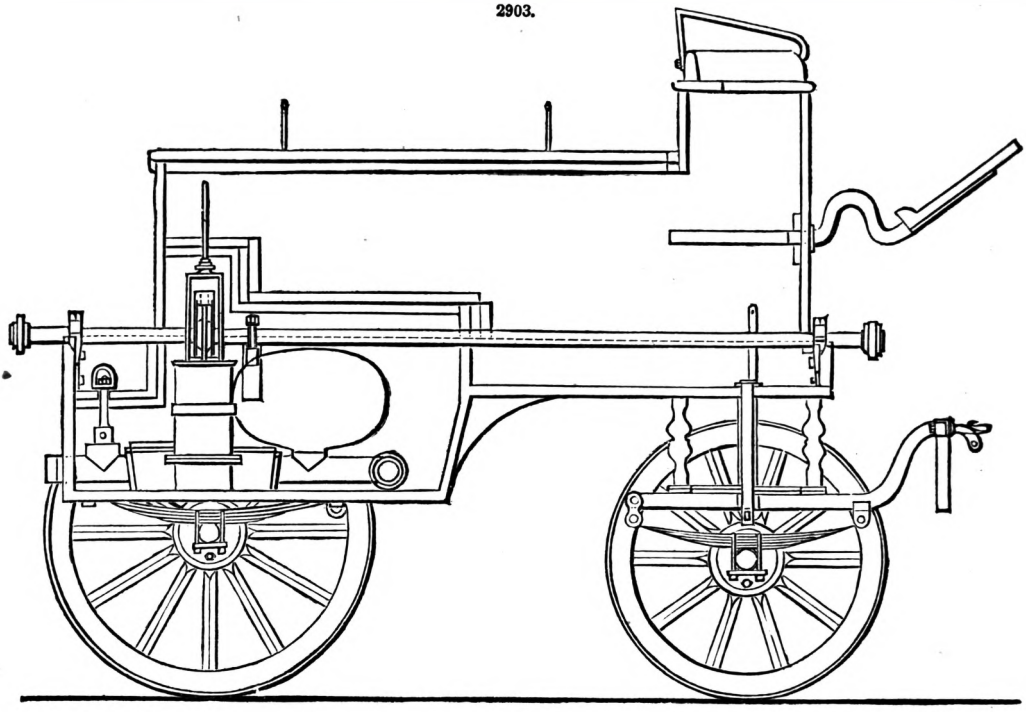

2904.

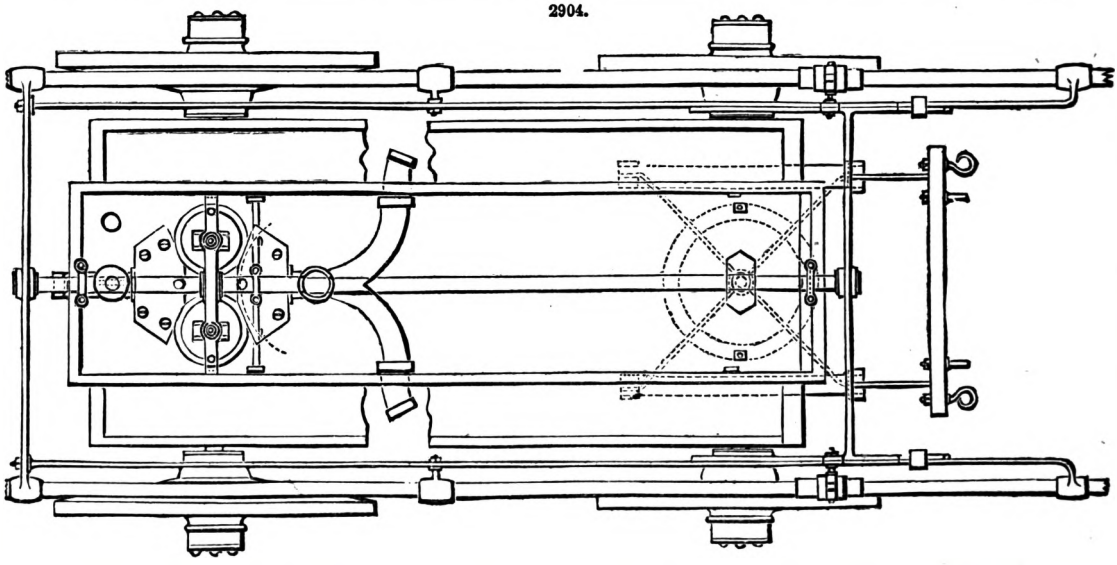

metal or brass valves to the pumps, in such a manner that they are not injured by pumping foul and gritty water, or affected by hot or cold climates. The valves are easy of access. It is fitted with

suction-pieces, to which flexible suction-hoses are attached, and is provided with a stop-valve so that water can be pumped out of its own cistern when required. The larger engines have two outlets, so that two streams may be thrown at once; the delivery-piece has an air-vessel attached to it. The works are fitted in hard wood, and occasionally in metal, cisterns, and are worked by a shaft and cross-levers, to which are attached the working levers for the men, these being arranged so as to fold up when travelling, and to extend out when the men are at work. Above the works is a strong box, which contains the hose and apparatus, and on which the firemen ride. At each side of the cistern is a pocket to contain the suction-hoses. The engine is mounted on high wheels and springs, and is fitted with a fore-locking carriage, which is provided with a pole for horses and drag-handle for men.

FIRE-ESCAPE. Fr., *Appareil de sauvetage*; Ger., *Rettungsapparat.*

The Fire-escape was invented by a very talented artist named Wyvall. Merryweather and Sons' fire-escape, Figs. 2905, 2906, has a strong main-ladder with a sail-cloth trough at the back for sliding down in safety, and this trough is protected either by copper gauze or netting; it has a turnover ladder simply worked by levers and ropes, and an extra piece to attach so as to reach higher windows. All the ladders are kept as light as possible for easy transit, and are bound back and front with wire-rope sunk in so as to gain strength. The carriage part is on high wheels and springs, so as to be readily moved about by two or three men. These fire-escapes reach from 48 ft. to 60 ft. high.

2905.

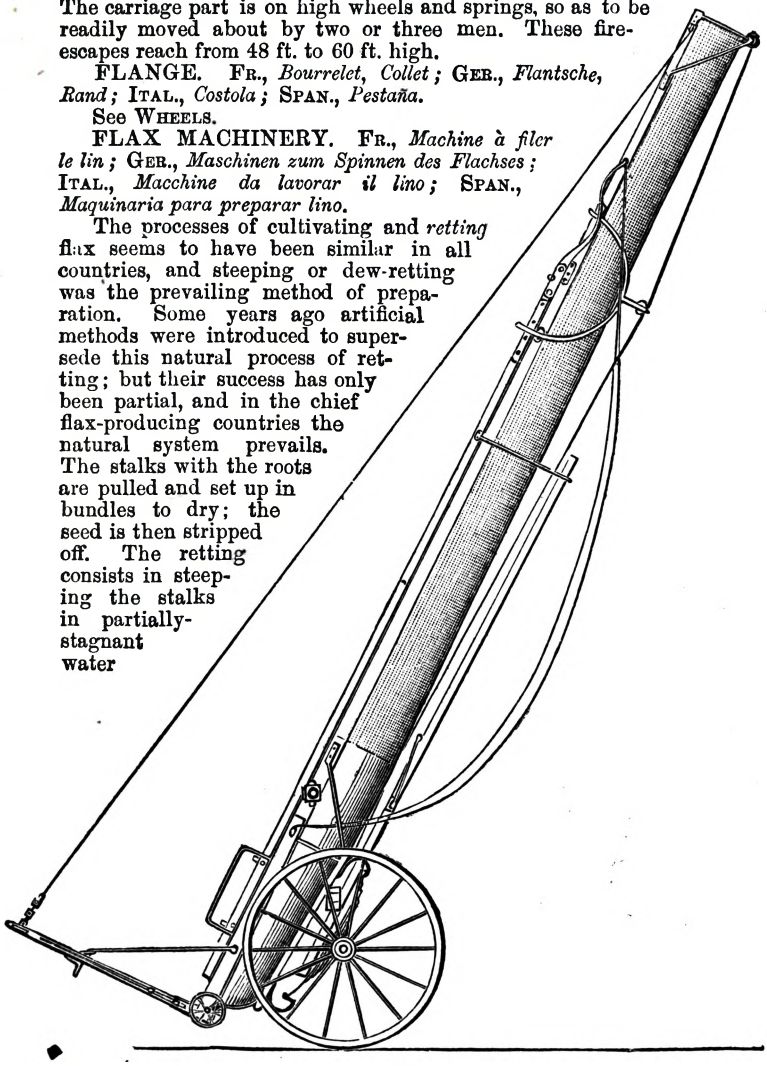

2906.

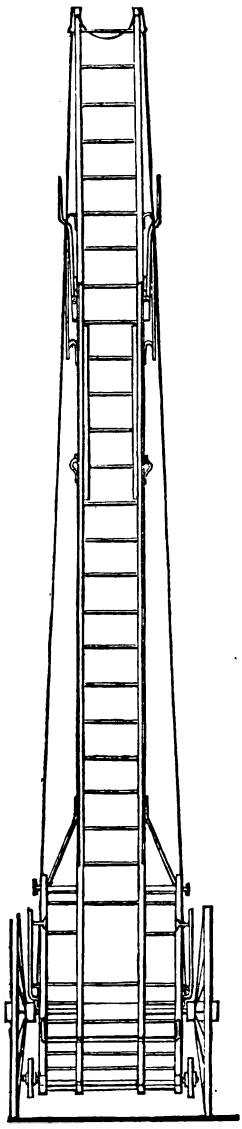

FLANGE. Fr., *Bourrelet, Collet*; Ger., *Flantsche, Rand*; Ital., *Costola*; Span., *Pestaña.*

See Wheels.

FLAX MACHINERY. Fr., *Machine à filer le lin*; Ger., *Maschinen zum Spinnen des Flachses*; Ital., *Macchine da lavorar il lino*; Span., *Maquinaria para preparar lino.*

The processes of cultivating and *retting* flax seems to have been similar in all countries, and steeping or dew-retting was the prevailing method of preparation. Some years ago artificial methods were introduced to supersede this natural process of retting; but their success has only been partial, and in the chief flax-producing countries the natural system prevails. The stalks with the roots are pulled and set up in bundles to dry; the seed is then stripped off. The retting consists in steeping the stalks in partially-stagnant water for about three weeks, during which time a fermentation takes place. The flax fibre being the bark or rind of the flax plant, of which the interior or core is a semi-wooden substance called boom, the object of retting is partially to decompose this woody substance, so that it becomes brittle when dry; and the fermentation should not be continued so long as to injure the strength of the fibre, but long enough to loosen the gum which causes the bark to adhere to the woody portion. The process therefore requires great care and experience, for either too much or too little retting is detrimental to the fibre. When thoroughly dried, the flax is ready to be broken, which is done by passing it in small bunches through pairs of fluted rollers; these break the woody core into short lengths, and also partially split the bark.

The next operation is called *scutching*, which in most flax-producing countries is still done by hand in preference to mill-scutching. In hand-scutching, a bundle of the broken flax is suspended alternately at each end and struck with a wooden beater, by which the broken pieces of the core or boom are dusted out from between the fibres. This operation requires considerable dexterity.

The next process is to *heckle* the flax, which was formerly done by hand by the flax-dressers. The heckle is a board set closely with pins about 4 in. long, which are ground to a fine tapering point; this board is fixed with the points of the pins upwards, and the bundles of flax are drawn over the pins until the flax is sufficiently split. Other heckles of varying degrees of fineness are also used, partly to bring up the fibres to the requisite degree of fineness, but chiefly to clear out the short loose fibres or tow which were split off in the first heckling. The dressed flax was sold in this state under the name of lint, for spinning by hand, which was formerly a common domestic occupation both of rich and poor.

In the early application of machinery to preparing and spinning flax, the fibres were drawn between two pairs of rollers, the first called the receiving rollers and the other pair the drawing rollers, the two pairs of rollers being placed at varying distances apart, according to the length of fibre to be operated upon. The drawing rollers ran at from five to ten times the surface speed of the receiving rollers, so as to elongate the *sliver* or bundle of fibres. Subsequently a series of travelling gills was introduced between the receiving and drawing rollers, these being a succession of small transverse combs, called gills, travelling continuously forwards in the longitudinal direction of the fibres about 5 per cent. faster than the surface speed of the receiving rollers. This proved a step in the right direction, and was followed by the introduction of spinning frames similar to those employed in spinning cotton, but with the modifications rendered necessary by the difference in the material to be spun; the chief feature in the flax machinery being the great difference in the distance between the receiving and the drawing rollers, which amounts to as much as 20 to 24 in. distance in the case of flax, instead of at most only a few inches in the case of drawing cotton, on account of the great difference between the length of fibre in the two materials.

The flax was at first kept quite dry in the spinning process; but a mode of damping the yarn by means of a piece of wet cloth held in contact with the drawing roller was afterwards employed, which had the effect of laying the loose ends of the fibres in the same manner as is done by wetting the fingers in hand-spinning. But the great expansion that has taken place in the flax trade is due to the principle of wet spinning introduced by Mr. Kay; the flax rovings being first put into warm water and allowed to stand until fermentation took place, by which the flax was macerated and brought into a state bordering on putrefaction. This was found to be a dangerous process, for if continued too long the strength of the fibre was destroyed. Subsequent experience showed that it was only necessary to pass the rovings through hot water in order to attain a better result, and that no maceration was requisite. It is only the natural gum contained in the flax fibres that requires to be dissolved or softened, in order to allow them to be drawn asunder; and the slimy nature of the rovings when wet allows this to be done to almost any extent. When spun dry by machinery, No. 40 yarn was about the maximum degree of fineness attained, in which the bundle of 60,000 yds. length weighs 5 lbs., and this size of yarn is suitable for ordinary linen cloth; but now by the improved process of wet spinning, Nos. 300 to 400 are ordinarily attained, in which sizes of yarn the bundle of 60,000 yds. length weighs only $\frac{2}{3}$ and $\frac{1}{2}$ lb. respectively. The bundle of flax yarn consists of 200 leas or hanks of 300 yds. each, making altogether 60,000 yds. length; and the Nos. are marks indicating the sizes of the yarn in inverse proportion to the weight of the bundle, as in the following Table, the unit being No. 200 weighing 1 lb.:—

No.	10	yarn weighs	20 lbs.	a bundle.	No.	200	yarn weighs	1 lb.	a bundle.
No.	20	,,	10 lbs.	,,	No.	300	,,	$\frac{2}{3}$ lb.	,,
No.	40	,,	5 lbs.	,,	No.	400	,,	$\frac{2}{4}$ or $\frac{1}{2}$ lb.	,,
No.	50	,,	4 lbs.	,,	No.	500	,,	$\frac{2}{5}$ lb.	,,
No.	100	,,	2 lbs.	,,	No.	1000	,,	$\frac{2}{10}$ or $\frac{1}{5}$ lb.	,,
No.	200	,,	1 lb.	,,	No.	1200	,,	$\frac{2}{12}$ or $\frac{1}{6}$ lb.	,,

The whole of this advantage indeed is not due to the principle of wetting the roving, but many improvements in the preparation have contributed to the attainment of this result. One of the conditions of spinning flax wet is to bring the receiving and drawing rollers within a few inches of each other, and thus reduce the length operated upon of the fibre of the flax to the distance between the bite of the receiving and drawing rollers. Yet notwithstanding all the improvements of machinery, hand-spinning still produces a yarn of three times the fineness hitherto attained by the finest machine; for while Nos. 300 to 400 are the finest produced by the machines, the hand-spinner produces yarn from Nos. 1000 to 1200, in which the bundle of 60,000 yds. length weighs only $\frac{1}{5}$ and $\frac{1}{6}$ lb. respectively. This finest kind of yarn, the value of which is equal to that of gold, weight for weight, is produced chiefly in Belgium, and is used for making Brussels lace. The subsequent manufacture of flax after the yarn is produced presents great variety, the fabrics made from it ranging from the roughest Dudley cambric used for nail bags to the finest lawn, and from the stoutest ship's sail to the lightest gossamer lace.

Since the introduction of the principle of spinning flax wet, various methods have been adopted to render the fibre of the flax finer, or in other words to split it up into a greater number of fibres by the process of heckling. In order to obtain the finest fibre, it was found necessary to break or cut the flax into three lengths: the top of the plant, the middle, and the root end. Of these the middle is the best part, owing to the fibres being there most uniform in thickness. By this plan of dividing the natural length of the flax into three lengths, which is designated the cut-line system, a very much smaller proportion of short fibres is produced in the heckling process than by heckling the fibre the full length of the plant; and consequently the fibres can be split much finer, and a larger proportion of yarn can be produced from a given quantity of flax, the degree of fineness being

taken into account. Another system is to cut the length of fibre in half; but this although partially pursued is wrong in principle, as the flax is then cut in the middle or most valuable part of the fibre, and each length has one bad end, the tapering end of the top of the plant, and the coarse end of the root. A third system is to heckle the flax the whole length of the fibre, which is called the long-line system, and is the most economical for the ordinary numbers of yarn that always constitute the great bulk of the manufacture. On this system a greater weight of flax can be passed through the heckling and preparing machinery in a given time: and a longer draft can be used at the spinning frame, that is the excess of surface speed of the drawing rollers above that of the receiving rollers can be made much greater than in the three-cut and two-cut systems, thereby producing a greater drawing action and making a finer thread, whilst reducing also the labour in attending to the process. The machinery used in the three-cut and two-cut systems is the same as in the long-line process, only that in the former it is finer in the gills and rollers and shorter in the reach or distance between the pairs of rollers. For some descriptions of manufacture it is absolutely necessary to use the long-line process, as, for instance, in making the best kind of sail-cloth, which is used in the royal navy and in the finest long-voyage vessels. For this purpose the longest and strongest flax is selected, and prepared with the greatest care in the processes of heckling, drawing, and roving, so as to preserve the fibres as long as possible; and in the spinning, which is done dry, very short drafts are used, that is, the excess of surface speed of the drawing rollers above that of the receiving rollers is comparatively small, so as not to break the fibre any more than can be avoided. The government authorities insist upon a test of both weight and strength at the same time, in order to get the sails both strong enough to resist the wind and also as light as possible for the sailors to handle; for as the weight of the mainsail of a first-class ship amounts to more than a ton, it is no easy task to handle it in a gale of wind and rain.

The machinery at present in use for preparing the flax and spinning it into yarn for weaving is shown in Figs. 2907 to 2925.

Fig. 2907 represents the breaking rollers, which are fluted iron rollers coupled together by spur-wheels: and both top and bottom rollers are supported in journals, so as to prevent the flutes from touching each other. The spaces between the teeth of the flutes are also much wider than the teeth working into them, so that, as the rollers revolve, the flutes never come in contact; otherwise the iron would damage the fibre. The object of passing the flax between these rollers is simply to break the boom or woody interior of the flax.

2907.

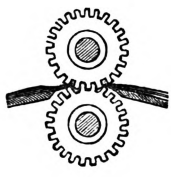

2908.

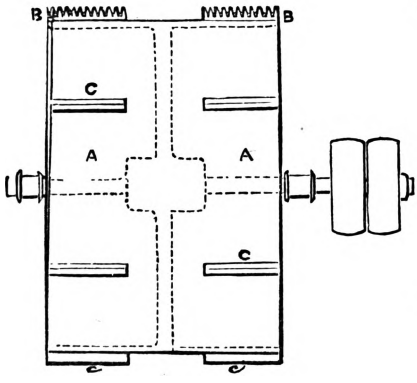

2909.

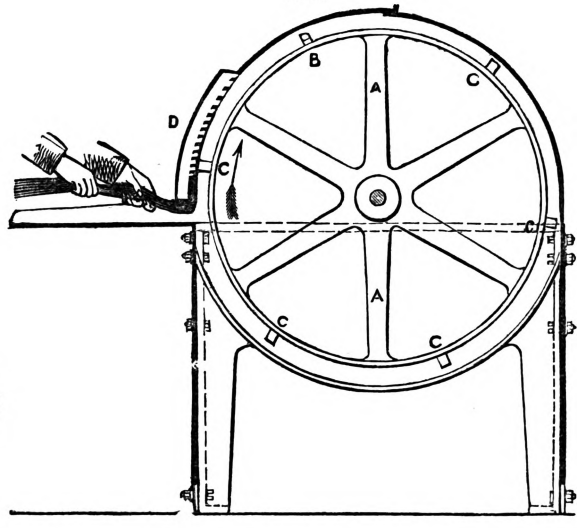

After the flax has been broken between the rollers, it is taken to the scutching machine, shown in Figs. 2908, 2909. The scutching cylinder A rotates in the direction of the arrow at about 300 revolutions a minute or 2800 ft. a minute speed of circumference, and dashes out the broken boom against the grating D by means of the toothed and plain projections B and C. The drawing shows one pair of combs B and five pairs of plain square beaters C C C upon the cylinder A, which are found to act well; but the number of either may be altered. The strick of broken flax is fed into the machine by the attendant up to half its length; and when the boom is thoroughly beaten out, it is drawn back and the other half inserted in the same way. The broken boom beaten out through the grating D escapes by an opening at each end of the grating. The ends of the casing of the machine being closed, a considerable current of air is drawn in through the grating D by the rapid rotation of the scutching cylinder, which is an essential feature in this operation, in carrying away the refuse and dust, and producing a gentle pressure of the flax against the projecting beaters upon

the cylinder. The bottom of the casing of the scutching machine is open, and communicates with a flue or culvert, through which the refuse and dust are carried away by the current of air.

The next process is to heckle the flax, and Fig. 2910 shows an end elevation of the Heckling Machine. The flax is divided into small stricks, and each is held between a pair of clamps A called holders, made sometimes of hard wood, but latterly of steel. These are closed firmly together

2910.

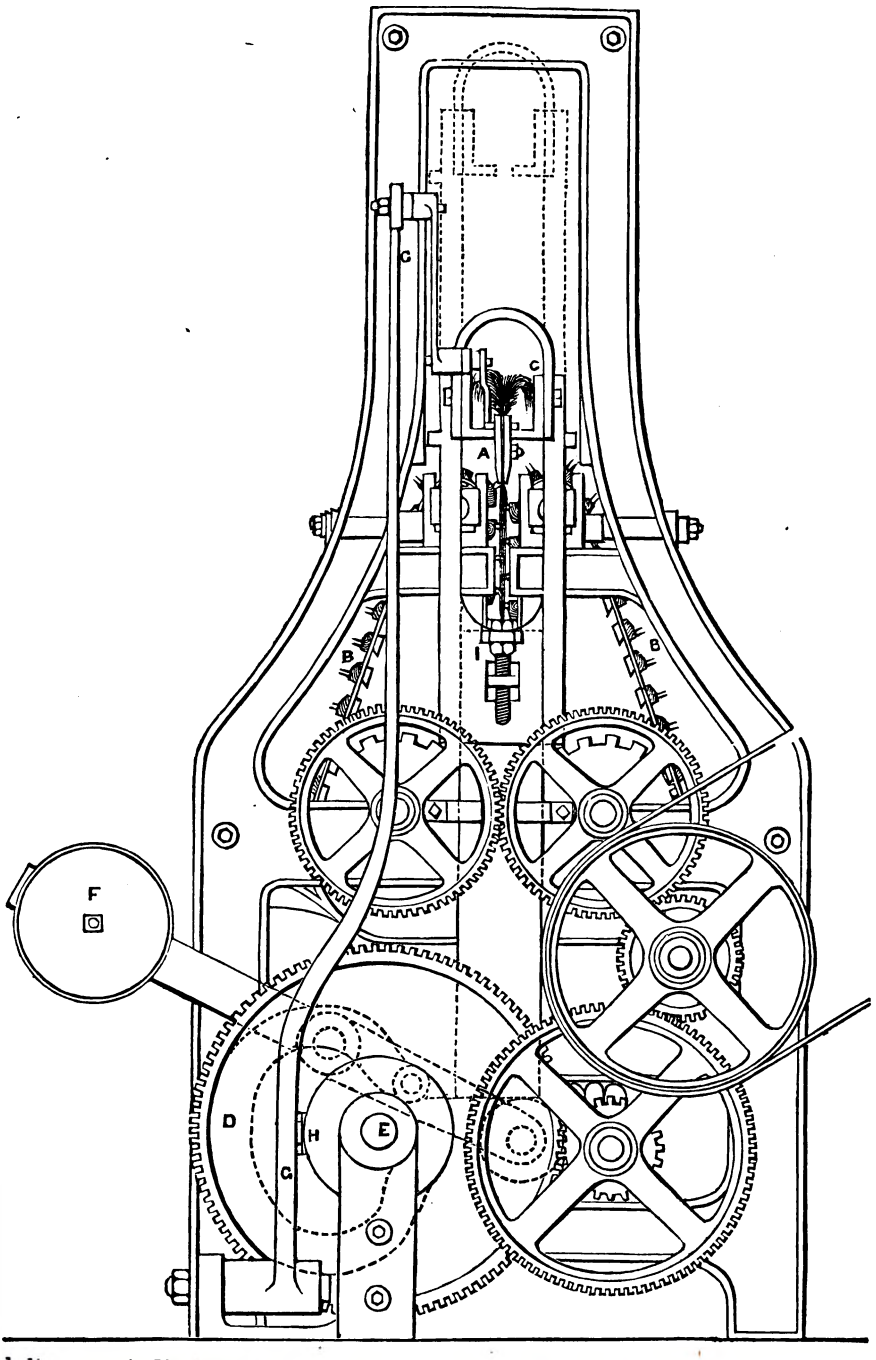

by a bolt, as seen in Fig. 2911, and are lined with either felt or india-rubber to form a cushion for the fibre to bed upon. The heckling machines vary in length, having sometimes four, six, or eight holders in a row; and the heckles B B have corresponding degrees of fineness, according to the amount of heckling that the flax will bear, the stricks of flax being submitted first to the action of the coarsest heckles, and then to the finer heckles in succession. The holders A are carried in a trough C. which extends the entire length of the machine, and also projects some distance at each

end, so as to afford room for feeding in at one end the newly-charged holders and removing from the other end those containing the heckled flax. The trough C receives a vertical motion from two cams D, shown by the dotted lines, mounted on the shaft E below, the weight of the trough being balanced by the weighted lever F. The form of the cams D is so arranged as to bring the pendent end of the flax gradually under the operation of the heckles, and also to allow a slight pause when the trough has descended to its lowest point, as shown in Figs. 2910, 2911, so that the heckles may comb out the fibres straight, and effectually clear out the tow. The trough C then rises gradually; and when it has reached its highest position, as shown dotted in Fig. 2910, the row of holders A are pushed forwards along it, by a series of pawls mounted upon a bar extending the entire length of the trough, and acted upon by the lever G and cam H. Each strick of flax is thus carried along to the next gradation of heckles, and the trough C then again descends as before. The set screw I, Fig. 2910, is for the purpose of adjusting the height of the trough A, so as to allow the holders to come down as near as possible to the bite of the heckles.

Fig. 2911 is a transverse section through the middle of the heckling machine. The sheets of heckles B B are made of leather straps passing round the small pulleys J J at top, and round the larger driving pulleys K K below, travelling at the rate of about 800 ft. a minute in the direction indicated by the arrows. The heckle-bars L L are of wood, attached by only one edge to the straps B, so that when they have passed over the top pulleys J J the heckle-pins may strike into the pendent flax as nearly at right angles as possible, as seen at the top of Fig. 2911. The heckles then descend in a vertical line until they reach the lower pulleys K K. These pulleys are grooved radially, and small slides carrying small iron rods M M are thrown out by the centrifugal force just below the centre of the pulleys. The rods M are for the purpose of stripping off any tow or short fibres of flax which may have remained between the heckle-pins after they have passed through the flax: and as the pulleys K revolve, the rods M are pushed back into their former position by sliding against the guides N, until they reach the upper side of the pulleys, when their weight overcomes the centrifugal force; and they remain drawn back until again thrown out below the centre to strip the tow off the heckle-pins. There are also a series of iron teeth O O attached to the inside of the leather straps B, which act as drivers to the straps, and keep the heckle-bars L always in proper horizontal position, by ensuring both the straps B being driven always at the same rate and without any chance of slipping; these teeth are driven by the teeth of the driving pulleys K K, and the small pulleys J J at top are also notched to receive them, the inner faces of the teeth O being rounded off to the proper curve for forming part of the circle of the upper pulleys J J in passing over them.

2911.

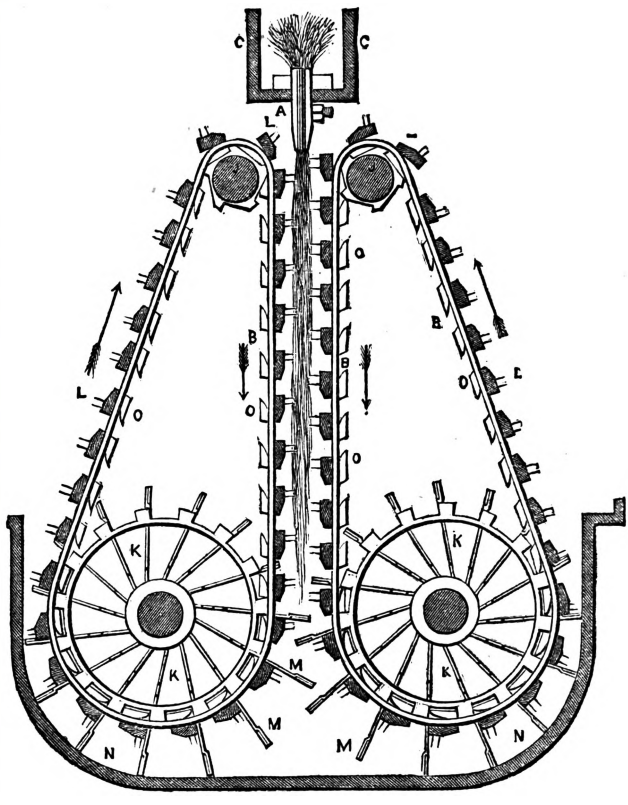

The main difficulty to be encountered in the heckling process has always been to obviate the large amount of waste that is made in the operation; and though heckling machines have been constructed in great variety, the same drawback of excessive waste has attended each, the proportion of the dressed line, or finished flax after the heckling, being as small as only 40 per cent. of the flax put into the machine in the lower qualities of flax, but ranging in the better qualities from 60 to 75 per cent. Heckling machines are also sometimes made with double sets of heckles and holders, for the sake of economy of construction and working; and this may be an advantage in heckling the best kinds of flax. The lower qualities, such as Egyptian and some kinds of Baltic flax, require the least amount of heckling; whilst the best kinds of Flemish and Irish flax, which are strong in the fibre, are capable of being heckled to almost any degree of fineness.

In the next operation the dressed line or heckled flax, which has been obtained thus far in the form of a number of separate stricks of irregular thickness and quantity, is spread and drawn into a continuous sliver like a ribbon, by the combined action of a series of combs and drawing rollers.

Fig. 2912 is a longitudinal section of the Long-line Spreading Frame, so called because the distance between the receiving rollers A and the drawing rollers B is made long enough to take in the greatest length of fibre that has to be worked on the long-line system. The stricks of heckled flax

are laid down upon the endless travelling feed-sheet C, which carries the flax forwards to the receiving rollers A; and between these it passes on to the inclined bed of heckles or gills D, and then between the drawing rollers B, through the doubling plate E, and between the delivery rollers F, which deliver the continuous sliver into the can G, ready to be removed to the next process, the course of the flax through the machine being indicated by the arrows.

2912.

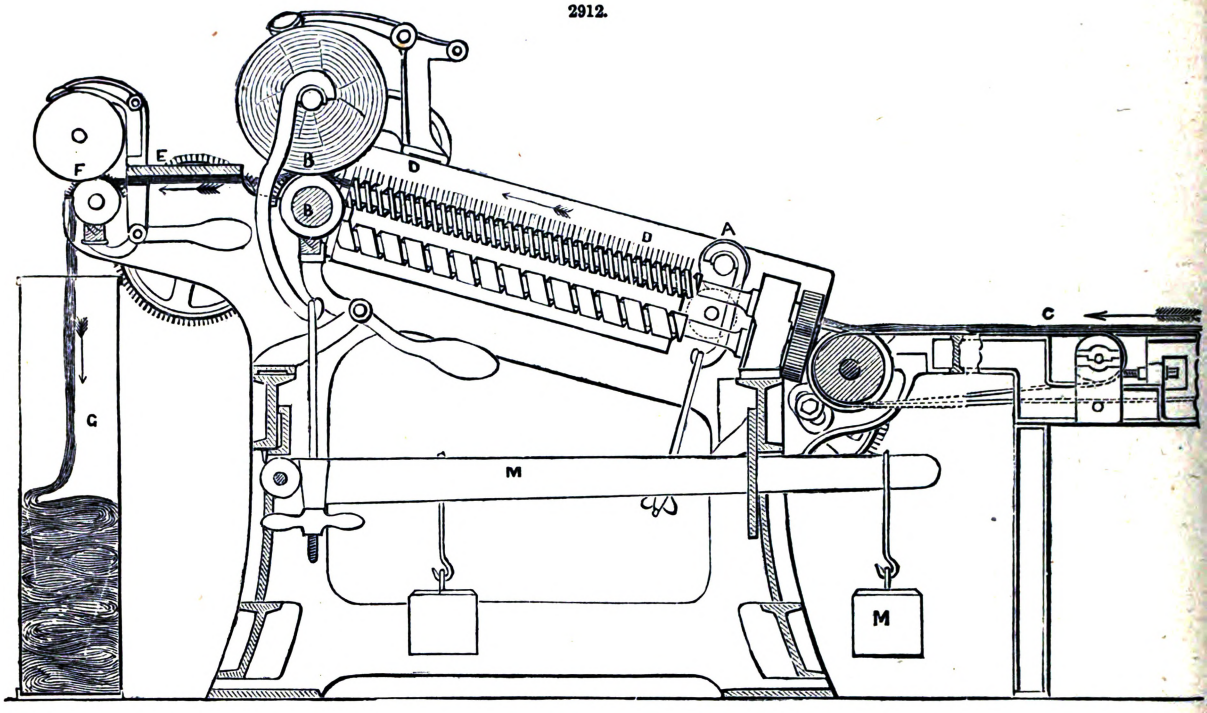

The heckle-bars or gills D are supported at each end upon the slides H, as shown enlarged in Figs. 2913 and 2915; and they are traversed forwards towards the drawing rollers B by means of the upper pair of screws I I revolving in one direction, and back again towards the receiving

2913.

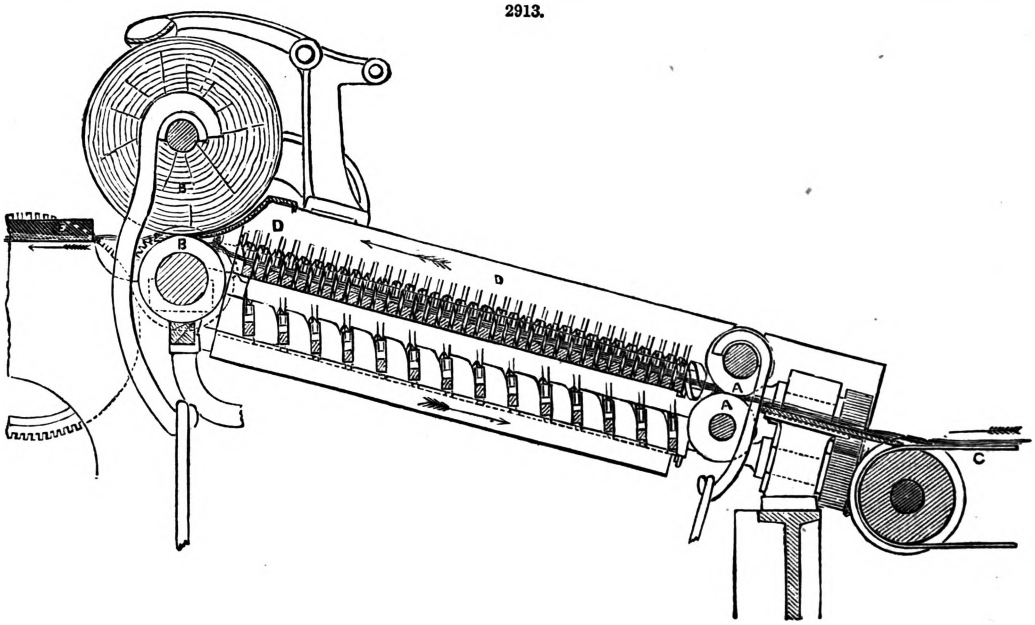

rollers A by the lower pair of screws J J revolving in the contrary direction, each end of the heckle-bar being inserted into a deep-cut groove in the screws I or J. This construction of machine is accordingly known as the screw-gill arrangement; and previous to its invention chains and other methods of propelling the heckle-bars were employed. The heckle-bars are carried forwards by the

upper screws I I till they arrive close to the lower drawing roller B, Fig. 2913, when each bar in succession drops down at the end of the slides H into the groove of the lower screws J J; these are made with a much longer pitch of groove than the upper screws I, partly to economize the number of heckle-bars, and partly to ensure the bar which has just dropped into the lower screw being carried back sufficiently out of the way, to allow the succeeding bar ample room to drop in the same manner. A cam K, Fig. 2915, is placed at the termination of the groove in the upper screw I, so that if the heckle-bar should happen not to drop by its own weight into the lower screw, the cam K will force it down, as shown in Fig. 2916. The heckle-bars are then carried back by the lower screw towards the receiving rollers A; and on each bar arriving close to the lower receiving roller, a

2914.

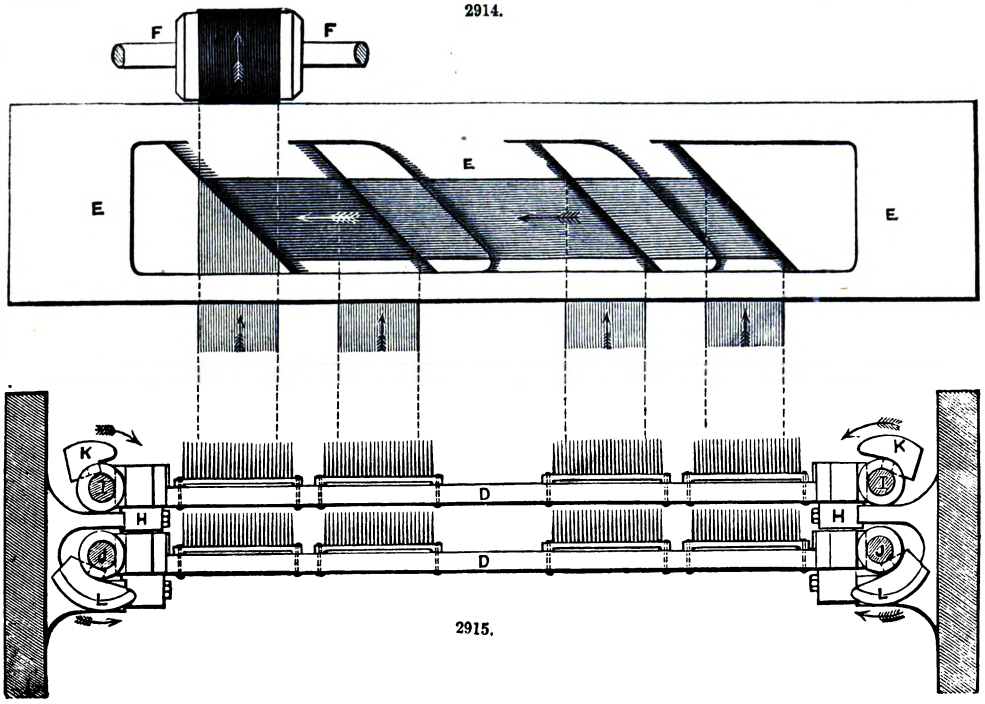

2915.

cam L, Fig. 2915, at the end of the lower screw raises the bar into the groove of the upper screw, as shown in Fig. 2917, when the heckle-pins penetrate the flax, and the heckle-bar begins to travel forwards again towards the drawing rollers. The lifting cams L are continued through about one-third of the whole circle, so as to support the heckle-bar on a level with the slide H, until the screw I carries it a short distance along the slide, and thus to prevent it from dropping down again into the lower screw, which was a serious defect in the earlier screw-gills.

2916.

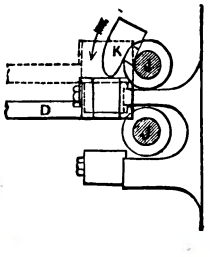

2917.

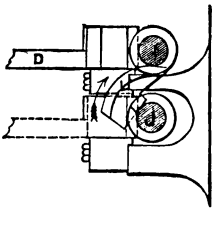

The screw-gills employed in the further process of preparing the flax for spinning are precisely the same in principle as those now described, only varying in their degrees of fineness. The system of screw-gill machinery shown in the drawings is called the long-line system, because by it the flax is worked the natural length of the fibre; and the machinery used for the cut-line and tow is just the same in principle, only shorter and finer to suit the length and fineness of the flax or tow operated upon.

The receiving rollers A, Fig. 2913, travel at a surface speed of about 5 ft. a minute, and the heckle-bars about 5 per cent. faster, so as to hold the flax in a slight tension. The surface speed of the drawing rollers B is from fifteen to thirty times greater than the speed of the heckles, or from 70 to 140 ft. a minute; consequently the fibres are combed or drawn between the pins, and the length of sliver delivered into the can G is elongated to about fifteen to thirty times the length taken in by the receiving rollers A. One object of this operation is to lay the fibres parallel to one another, and also to prevent the long fibres from carrying the short fibres along with them, and thus making an uneven sliver, which must produce uneven yarn. The upper of the drawing rollers B is made of wood, and is heavily pressed down by the links, levers, and weights M.

The flax is delivered from the drawing rollers B in a continuous sliver of ribbon-like form, from 4 to 5 in. wide, and four of such slivers are drawn by the machine, as shown in Figs. 2914, 2915: these are then passed through the doubling plate E, and all four are rolled together into a single sliver of the same width by passing through the single pair of delivery rollers F. The doubling plate E, shown in plan in Fig. 2914, has openings opposite each pair of drawing rollers at an angle of 45°, through which the slivers are passed, whereby they are made to travel first at right angles

to the line of delivery from the drawing rollers, and are afterwards turned again into the same direction towards the delivery rollers F, which deliver the final single sliver into the can G, Fig. 2912.

The next operation is to re-draw and double again the sliver delivered from the long-line spreading frame: and Fig 2918 shows the second Long-line Drawing Frame. A number of cans G, generally eight, containing the slivers delivered from the spreading frame, are placed behind this drawing frame, whence the sliver passes over a high conductor N, in order to allow a considerable length to hang pendent, and thus straighten out the creases made by pressing it down in the can G. The sliver then passes to the receiving rollers A, which are three in number, the object being

2918.

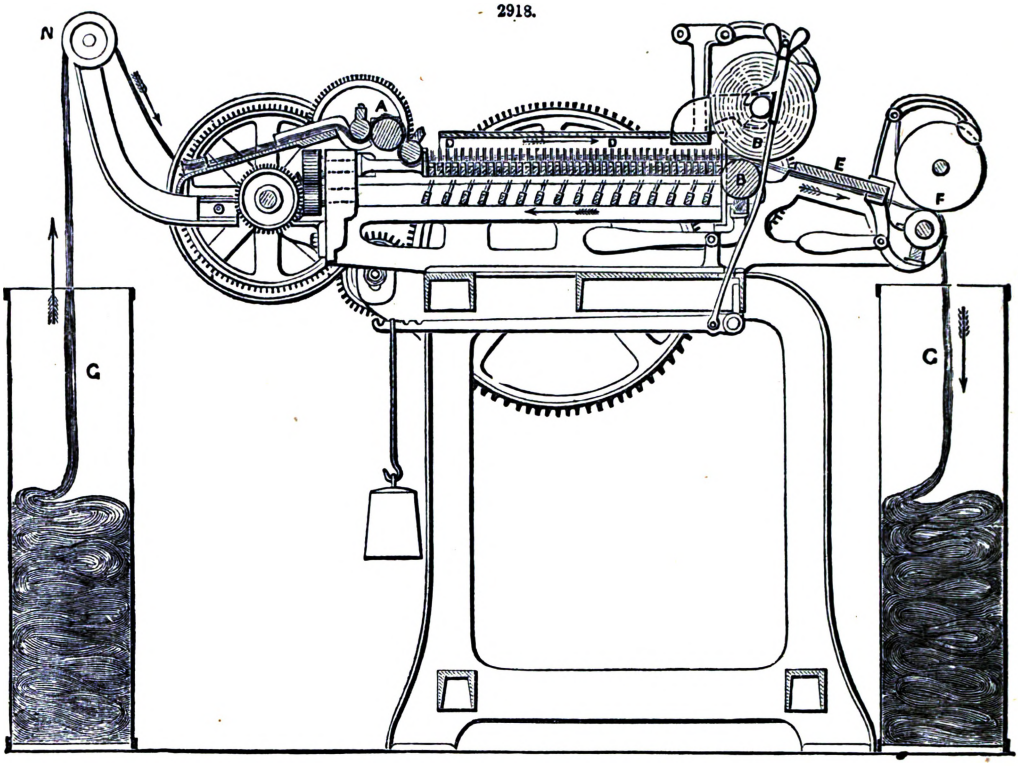

to hold the sliver firmly, and not allow the gills or heckles D to draw it beyond the surface speed of the rollers, which is about 6 ft. a minute. The further operation of this machine is precisely the same as that of the spreading frame, the eight slivers being combed and drawn by the gills D and drawing rollers B, and then doubled by passing through the doubling plate E, and rolled into a single sliver by the delivery rollers F. The gills D, however, are finer and the rollers smaller than in the spreading frame. The speed of the gills is about 6½ ft. a minute, and the surface speed of the drawing rollers B and delivery rollers F about 130 ft. a minute; and the length of the sliver delivered by the rollers F is consequently elongated to about twenty times the length taken in by the receiving rollers A.

The slivers from this machine are then taken to a third drawing frame, of precisely the same construction, but with still finer gills and smaller rollers; by this means the sliver is further elongated about fifteen times, the object being to reduce it in width and thickness. From this third drawing frame the slivers are then taken to the roving frame.

Figs. 2919 to 2922 represent what is known as the Screw-gill Regulating Roving Frame, in which the delicate sliver of flax that has been produced by the previous processes is still further combed and drawn by gills and drawing rollers, and is then twisted into a roving and wound upon a bobbin.

This machine as a whole is perhaps the most complicated one used in spinning any kind of material, and has taken many years to bring it to the present state of perfection. The lower or regulating portion of the frame, by which the speed of winding the roving upon the bobbin is regulated according to the gradually increasing diameter of the bobbin, is similar to that used in the cotton manufacture, where this system of machine was first introduced; but when so much of the machine as is used in the cotton manufacture is added to the screw-gill machinery, the two make what may be considered the most ingenious and perfect machine used in textile manufacture, and great ingenuity has been applied to overcome the numerous obstacles met with in perfecting this machine. The screw-gill part A, Figs. 2919, 2920, is precisely the same as in the drawing frame last mentioned, only so much finer; for here the sliver is reduced to the smallest size previous to receiving the twist which changes it into a roving. The speed of the gills is about 6 ft. a minute, and the surface speed of the drawing rollers B about 90 ft. a minute, whereby the sliver is finally elongated about fifteen times.

The special part of the roving frame, independent of the screw-gills and drawing rollers, is the regulating portion, situated in the lower part of the machine, which takes up the sliver as delivered by the drawing rollers, and after putting in the twist winds it upon a bobbin with a uniform but slight tension, not sufficient to elongate the delicate roving: and as each successive coil presents a larger diameter than the preceding, the speed of the bobbin has to be regulated or gradually increased for winding the roving, which is delivered at a uniform rate from the drawing rollers.

2919.

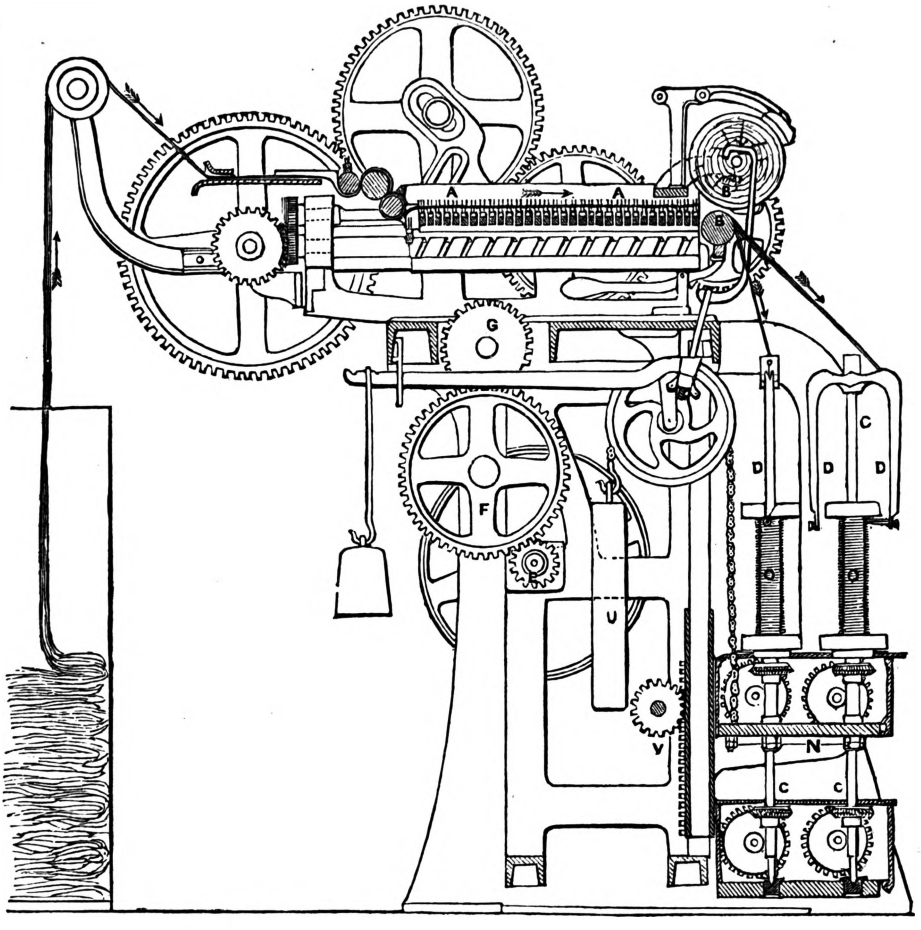

The bobbin-spindles C C, Figs. 2919, 2920, carrying the fliers D D, are driven at a uniform speed from the driving pulley upon the end of the main longitudinal driving shaft E, through a train of spur-wheels driving the skew-bevel wheels at the bottom of the spindles C. The screw-gills A and drawing rollers B are also driven at a uniform speed by means of a change pinion on the end of the driving shaft E, through the intermediate wheel F working into the wheel G on the end of the top cone shaft H. The lower cone K, Figs. 2921, 2922, receives its motion from the upper cone H through a strap L, which is made to travel longitudinally along the cones by means of a chain M passing over a pulley, with a weight hung at the end sufficient to draw the strap-guide along two slide-rods that extend the length of the cones, or about 2½ ft. The speed of the lower cone is thus varied according to the diameters of the cones at the point where the strap may be working. The advance of the strap-guide is governed by an escapement motion acted upon at each vertical reciprocation of the bobbin-lifter N. The bobbins O O run loose upon the bobbin-spindles C, and are themselves driven in the same direction as the spindles C, through the intervention of the regulating gearing and the skew-bevel wheels carried by the bobbin-lifter N.

Upon the driving shaft E is keyed a mitre-wheel I, Fig. 2922, which drives two mitre-wheels mounted in the disc of the spur-wheel P; and these again drive another mitre-wheel J running loose upon the driving shaft E. A spur-wheel R upon the boss of the last mitre-wheel J drives the train of spur-wheels indicated by the dotted lines in Fig. 2921; these are mounted on the jointed rocking frame S, Fig. 2920, and communicate motion to the longitudinal shafts in the bobbin-lifter N, which carry the skew-bevel wheels that gear into the bobbin-pinions. The bobbins O O are thus caused to revolve in the same direction as their spindles C, but at a somewhat slower speed. If the disc-wheel P were not allowed to rotate at all, the bobbins O would be driven, like their spindles, at one uniform speed; and if the disc-wheel P were driven at the same speed as the driving shaft E, no motion whatever would be communicated to the train of wheels which drives the bobbins O; therefore by regulating the motion of this wheel P any required speed can be com-

municated to the bobbins. A pinion on the shaft of the lower cone K gears into a train of spur-wheels and pinions, so as considerably to reduce the speed at the pinion T, which gears into the disc-wheel P, thereby governing this wheel in accordance with the speed imparted to the lower cone. The rotation of the mitre-wheel I, keyed upon the driving shaft, has a tendency to drive the disc-wheel P at a considerable speed, so that the lower cone K is required to retard instead of actually driving it. (See Fig. 2189.)

2920.

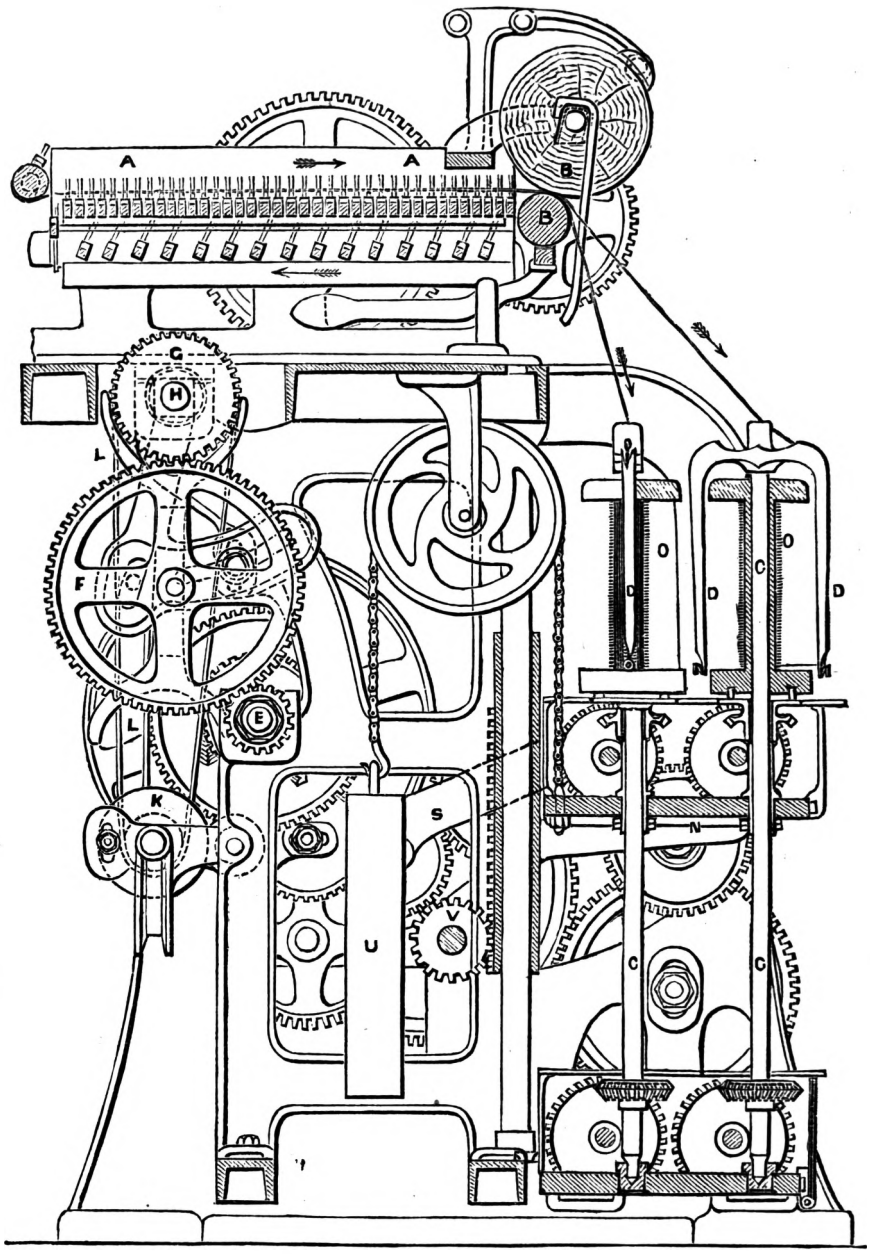

When the end of the roving is threaded through the flier D, and then attached to the bobbin-shank O, Fig. 2920, the flier being fixed upon the spindle C will first put the twist into the roving, according to the number of revolutions, generally from 1½ to 2, which the spindle makes for each inch of sliver delivered by the drawing rollers B. Then the speed of the bobbin must be so much slower than that of the flier as to enable the flier by its greater speed to coil upon the bobbin the length of roving delivered by the drawing rollers. When one coil of roving has been laid upon the shank of the bobbin, its diameter is increased by double the thickness of the roving; and therefore before the next coil is wound on, the speed of the bobbin must be increased in proportion to the increased diameter. This is effected by each ascending and descending motion of the bobbin-lifter

N releasing a pawl, which allows the strap L to be drawn along the cones H and K to a different diameter, and thereby varies the speed of the pinion T gearing into the spur-wheel P. By this means the roving is wound upon the bobbin with an equal amount of tension, and consequently a uniform thickness, throughout the entire length wound. The different thicknesses of the roving, and consequently varying diameter of the bobbin when the coil is made with a thicker or thinner roving, are allowed for by the fineness of the teeth in the ratchet-wheel of the escapement apparatus. The bobbin-lifter N is counterbalanced by the weight U, Fig. 2920, and the vertical reciprocating motion is given to it by means of a mangle-wheel with pinion and rack V, driven from the lower cone K, so as to impart a gradually decreasing speed to the reciprocating motion of the bobbin-lifter, in accordance with the increasing diameter of the bobbin as the roving is wound upon it. These variations in speed can be so nicely adjusted that the bobbin will take up the whole length of the roving wound upon it, amounting to several hundred yards, without any perceptible difference in tension between the first coil and the last.

2921.

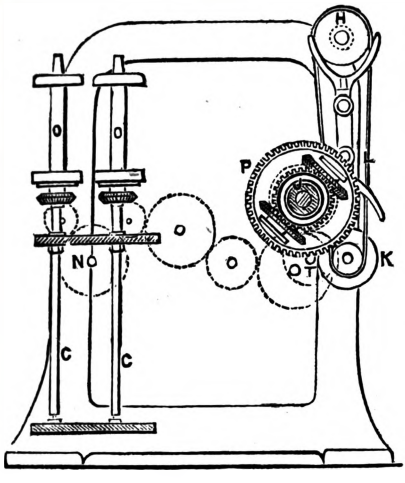

2922.

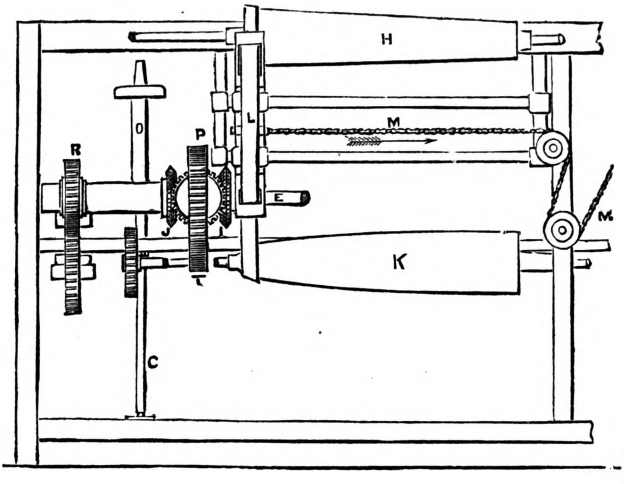

Figs. 2923, 2924, represent a section of a Tow Carding Machine. The tow frequently contains a considerable quantity of dirt and boom that has been left in the flax by the scutching machine. This is principally removed from the dressed line in the heckling process, but is thrown down with the tow or shorter fibres of flax which are combed out by the heckles. The tow carding machine is intended to separate the dirt and boom from the tow, and deliver the fibre in an even sliver ready for the drawing frame.

The large carding cylinder A, Figs. 2923, 2924, is 2 ft. 7½ in. diameter, and is made of cast iron, and covered with beech-lagging set with finely ground and hardened steel teeth. The tow is laid upon an endless feed-sheet B, which carries it forward to the feed-roller C. Under the feed-roller is a cast-iron shell, the upper edge of which is carried up into the angle formed by the carding cylinder and the feed-roller; and as the tow is slowly carried forwards by the feed-roller at a rate of about 2 ft. a minute, it is caught by the teeth of the carding cylinder A, which runs at about 300 revolutions a minute or 2500 ft. a minute speed of circumference. The teeth of the cylinder A throw the tow against the worker D, which is a slowly revolving roller, running at a surface speed of only about 100 ft. a minute, and covered with needle-pointed teeth set in strong leather. The teeth have a keen bend, as shown enlarged in Fig. 2924, and carry the tow round towards the iron bar E, the upper edge of which is polished. The tow is then caught by the stripper F, which is clothed in a similar manner to the carding cylinder A, and runs much quicker than the worker D but slower than the cylinder A, having a surface speed of about 1500 ft. a minute. The teeth of the carding cylinder then strip the tow from the teeth of the stripper F, and carry it forwards to a second pair of workers and strippers of exactly similar construction to the first, where the same operation is repeated for further cleansing and combing the tow.

The carding cylinder next carries the tow forwards to the doffer G, which is clothed with finely ground wire teeth set in leather, and moves very slowly at a surface speed of only 150 ft. a minute. The tow is combed off the doffer by a comb I, Fig. 2924, carried upon an oscillating arm worked by the crank-shaft J, and it passes forwards to the feed-roller H provided with an edge-plate or shell similar to the first feed-roller C, and running at the same surface speed as the doffer G, feeding the tow again on to the carding cylinder A. As the speed of the carding cylinder is so very much greater than that of the doffer and feed-roller, a further combing action takes place upon the tow, by the teeth of the carding cylinder combing out the fibres, which are partially held between the teeth of the slow-moving doffer and of the feed-roller. The carding cylinder then carries the tow forwards to the second and third doffers K and L, where the final combing of the fibre takes place; and from these doffers the tow is combed off as before by the combs I I, where it is divided into three slivers, and passed forwards to the two pairs of rollers M and N, in connection with which is a doubling plate provided with angular openings, as previously described in the spreading frame. The last pair of rollers N N deliver the slivers of tow into cans ready to be taken away to the drawing and roving frames. It is usual to place a gill drawing apparatus in connection with the carding machine, so as to perform the first drawing operation at the same time, immediately upon the slivers

of tow being delivered from the last pair of rollers N N; and this arrangement has been adopted as an improvem

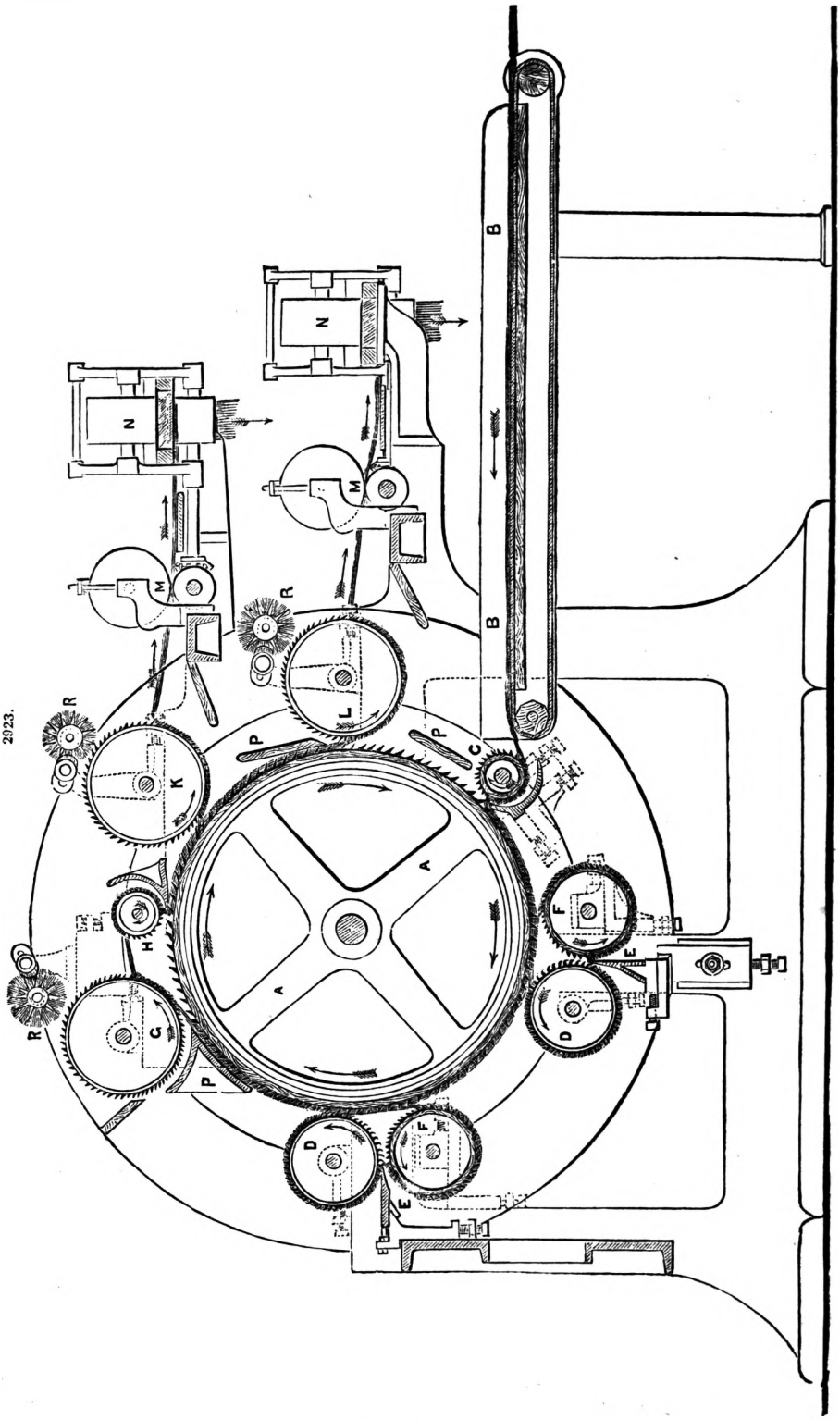

The action of the teeth upon the tow in the carding machine ought to be of a combing character, and in order to get this action the tow requires to be held up to the points of the teeth, which is

effected in the improved carding machine shown in the drawings by means of the edge-plates E E, Figs. 2923, 2924, inserted between the workers and strippers. The tow accumulates upon the

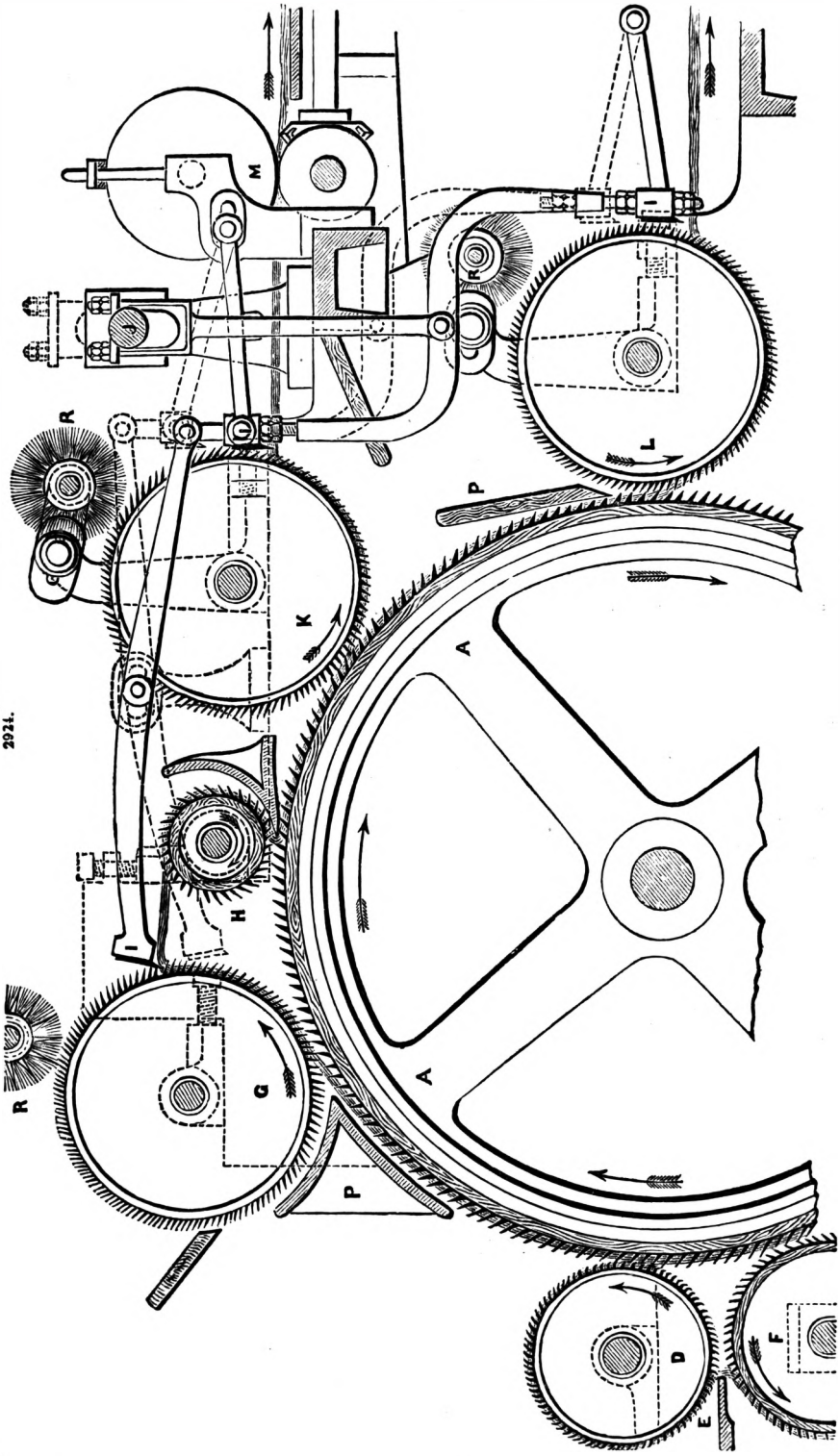

worker D with its keen bent teeth, and is taken off by the stripper F; but the edge-plate E binds the tow into the angle between the two rollers and holds it up to the teeth of the stripper, thereby

causing an amount of friction in the passage of the tow, and enabling the stripper by its quicker motion to comb out the fibres. In the ordinary carding machines, without these edge-plates between the workers and strippers, the tow is plucked in patches from the worker by the stripper, sometimes in such quantities as to roll up the tow, and in this state it is carried back to the carding cylinder, thus breaking the fibre and making uneven work. Carding machines have for a long time been made with cylinders as much as 5 ft. diameter, and a considerable number of pairs of workers and strippers, say from six to eight or even nine pairs; but in these the work produced is in no way

2925.

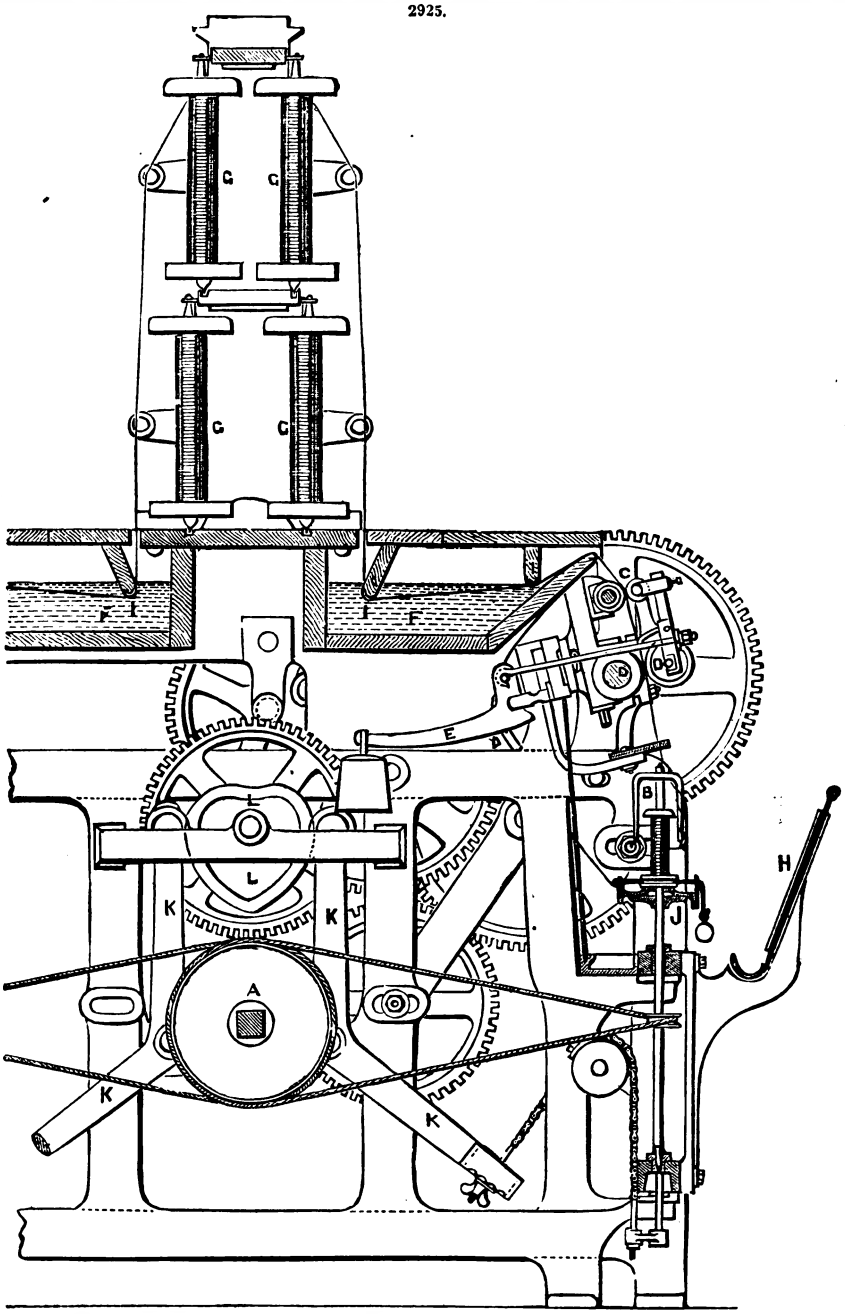

superior, and a much larger amount of waste is made and more power used. Wooden guards P P, Fig. 2923, are fixed in different positions round the circumference of the carding cylinder, for the purpose of directing the currents of air caused by the rotation of the cylinder so as to disturb the tow as little as possible in its passage between the points of the teeth of the several rollers running in contact with the carding cylinder, in order thereby to avoid waste and imperfect work. The teeth of the doffers G, K, and L, are kept clean by the brushes R R driven in the opposite direction.

The after processes of drawing and roving the tow slivers as delivered from the carding machine

are precisely similar to those in the long-line preparation already described, the drawing and roving frames for the tow being adapted to the shorter fibre to be worked. Several kinds of gills have been introduced for preparing tow, but none have proved an improvement upon the screw-gill, which is now almost universally used in flax machinery. The process of combing tow by a combing machine, after carding it, is carried on by two or three eminent spinners, but the cost is out of all proportion to the quality of yarn produced; and the tow thus prepared is only used for making sewing thread, to which it has been successfully adapted.

The last process in the manufacture of yarn is the spinning; and in Fig. 2925 is shown a transverse section of a wet spinning frame.

The cylinder A drives the spindles B, which carry the fliers for spinning the yarn, at a uniform speed of from 2000 to 4000 revolutions a minute, the speed being adjusted according to the weight and quality of yarn produced. C are the receiving rollers, and D the drawing rollers, which are called the back and front pair of rollers respectively; and the difference of speed is usually from eight to ten times, thus drawing out the roving to about $\frac{1}{10}$ of its size. The upper roller of each pair is pressed against the lower by the saddle and weighted lever E. The hot-water trough F through which the roving passes is placed with its edge as near as practicable to the bite of the receiving rollers C. The bobbins G from which the roving is supplied are placed above, and the roving is held down in the water by strips of wood I I faced with sheet brass. A splashboard H is fixed in front of the spinning frame, to prevent the spray from the wet yarn being thrown upon the attendants.

The lower of the two drawing rollers D is driven by a train of wheels from the main driving shaft A at a uniform speed of from 100 to 200 ft. a minute of the circumference, so that the fliers make from 20 to 40 revolutions for each foot of yarn delivered by the drawing rollers; and this additional amount of twist put into the wet sliver converts the delicate roving into a strong yarn. The yarn bobbin is loose upon the spindle B; and as the length of yarn given out by the drawing rollers is very much less than the length which the flier would wind upon the bobbin if the latter were stationary, the bobbin is simply dragged round by the flier in the same direction as the spindle B, without requiring any regulating gearing for driving the bobbin as in the case of the roving frame, since the yarn is too strong to be elongated or injured by the tension necessary to drag the bobbin round. In order to keep sufficient tension upon the yarn whilst winding upon the bobbin, so as to prevent *snarls* in the thread, a cord is pressed against a groove in the bottom flange of the bobbin, the friction of which retards the bobbin and produces the required tension upon the yarn; one end of this cord is fastened to the inner edge of the bobbin-lifter J, and the other end hangs pendent with a weight through a notch in the outer edge of the bobbin-lifter, which is notched along its entire length; thus the amount of friction upon the bobbin can be varied as desired by shifting the cord into a different notch, thereby varying the length of the arc of contact of the cord with the bobbin-flange. The bobbin-lifter J is raised and lowered at a uniform rate by the lever K worked by the cam L, which is driven from the main driving shaft A.

The important point in a spinning frame is to have good rollers. The receiving rollers C and the lower of the drawing rollers D are made of hard brass, and all three are very carefully fluted longitudinally with flutes that have a round top and bottom, so that the roving as it passes through the receiving rollers may not be unevenly crushed, which would cause the fibre to break down in the drawing process. The drawing rollers D have the upper or pressing roller made of soft material, usually boxwood, but the warm water used in the process is very destructive to the wood; gutta-percha also has long been tried, but if not well purified from sand or earthy matter it is apt to wear away the brass roller.

See the paper of Thos. Greenwood, printed in the Proceedings of the Inst. of M. E. (1865).

See BRAKE. COTTON MACHINERY. GEARING.

FLOAT WATER-WHEELS. FR., *Roue à aubes*; GER., *Schaufelrad.*

Before entering upon the examination of this subject, it is necessary to indicate the meaning of the letters that we employ in our calculations and investigations. Thus we have,

H = Total fall of the water. This fall, when it is taken to measure the entire force of the current, is the difference of level between the fluid surfaces of the upper and lower reaches. But for hydraulic wheels, it is reckoned from the upper level, or that of the reservoir, to the lowest point of the wheel, as this point may be lowered to the level of the lower reach, when this level is constant.

V = Velocity of the fluid on its arrival at the point of the wheel upon which it exerts its action.

v = Velocity of the wheel at the centre of percussion of the fluid. The distance of this centre from the axis of rotation is the *dynamic radius* of the wheel.

h = That portion of the fall comprised between the level of the reservoir and this same centre. It will be the height due to V, if this velocity experiences no loss between the reservoir and its arrival at the wheel.

h_1 = Height really due to V; thus, $h_1 = \frac{V^2}{2g}$.

We shall make $h_1 = h\ (1 - \mu)$, μ being a quantity connected with the before-mentioned losses.

h' = Height due to the velocity v; $h' = \frac{v^2}{2g}$.

h'' = Height due to the velocity $V - v$; $h'' = \frac{(V - v)^2}{2g} = \frac{(\sqrt{2gh_1} - v)^2}{2g}$.

P = Weight of water furnished in 1″ by the motive current.

Q = Volume of this same water. $P = 62{\cdot}45\ Q$.

K = Effort exerted by the motor upon the wheel.

p = Weight representing the sum of all the resistances which the motor has to overcome.

E = Dynamic effect produced by the wheel, or the force impressed upon it by the motor. $E = p\,v$.

n = Ratio of the real to the theoretic effect, or to the impressed force deduced from calculation.

m = Ratio of the real effect to the force of the motor; $m = \frac{p\,v}{P\,H}$.

We are to treat here of what are strictly termed *float-wheels*. They are the most simple of wheels, and such as were formerly almost wholly in use; they are still in frequent use, principally on small falls, those below 5 ft.

Such a wheel, Figs. 2926, 2927, consists, 1st, of a *revolving shaft*; 2nd, of two rims or shroudings, and even of three in very large wheels; 3rd, of arms, which connect each rim to the arbor, and which are arranged in different ways, as we see by the figures; 4th, of supports, strong wooden pins, imbedded and held fast upon the shroudings; 5th, of floats nailed or bolted upon the supports; 6th, and quite often of counter-floats or planks fixed flat against the rims, and enclosing a part of the interval between the floats.

2926.

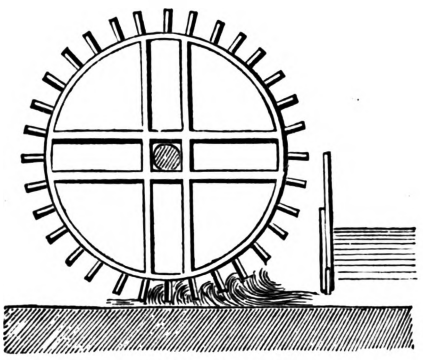

2927.

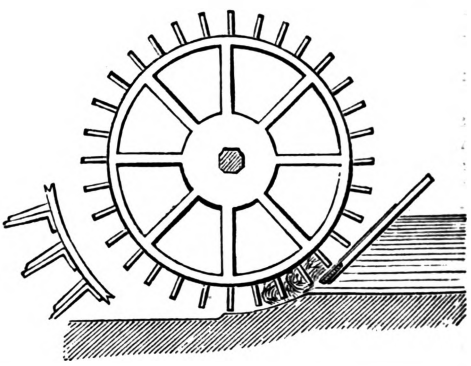

The motive water is led to the wheel by a water-course whose sides nearly touch the floats, leaving them only the play necessary for motion. It is delivered to the course through a gate-way, whose board is raised to a greater or less height, as we wish to deliver more or less water.

In the first place we shall make some observations upon the best disposition, and upon the principal dimensions to be given to parts which have an immediate influence upon the effect of the machine, to wit, the sluice, the course, and the floats.

The fluid mass, on its issuing from the gate, experiences a contraction; then dilating, it meets the sides of the water-course and follows them. Even should it have, when at the section of greatest contraction, a velocity due to the height of the reservoir, yet a notable portion is afterwards lost by the effect of this dilation, and that of the friction against the course, if it has any length; so that quite often it arrives at the floats with only three-quarters of this velocity. We prevent this loss of velocity, and consequently of force, 1st, by establishing the gate as near as possible to the wheel; we thus render the resistance of the course nearly insensible; 2nd, by disposing the sluice so as to reduce the contraction as much as may be; for this purpose, we prolong its bottom and lateral sides (above the opening) into the bottom and sides of the water-course; and we widen its entrance, or that of the canal which precedes it, so that the horizontal section of this entrance may have the form represented by Fig. 561; 3rd, we incline the gate-board and all the front part of the gate-way; this inclination amounts to carrying the orifice nearer the floats, and nearly approaches the openings of pyramidal troughs, where the contraction is almost nothing. Experiments made by M. Poncelet place beyond a doubt the good effect of this inclination; a gate inclined 63° to the horizon (1 base to 2 height), gave him 0·75 for the coefficient of contraction, and he had 0·80 with an angle of 45° (1 base to 1 height); an upright gate, in the same circumstances, gave about 0·70. By disposing his sluices in the manner above indicated, this philosopher accomplished the end of bringing the motive current upon the floats of the wheel with a velocity but little differing from that due to the height of the reservoir; it is true that the opening of the gate was great, and the diminution of the velocity is as much the less as the opening is more considerable. If, without loss of fall, we might direct the water immediately upon the floats, in causing it to issue through an orifice in a thin plate, or through a pyramidal trough, the velocity would experience only a few hundredths of diminution.

Immediately past the gate, the water-course is directed, with a slight inclination, towards the wheel; it passes beneath, and then continues in a right line, Fig. 2926. Its size is determined by the volume of water which it is to conduct; the thickness of the fluid sheet in the water-course (supposing for an instant the wheel to be raised up) should never be above 0·82 ft. nor below 0·49 ft. If it were less, the quantity of water escaping between the flooring and the lower edges of the floats, without exerting any action upon them, would be proportionally too great; and the force of its current would be notably diminished. That this diminution may be as slight as possible, we should not give to the space necessary to be left between the sides of the water-course and the edges of the floats more than from ·0328 to ·0656 ft.

If ever so little attention is given to careful constructions, we do not make the water-courses entirely rectilinear. Their bottom or flooring should arrive at the level of the lower edge of the second float above the vertical diameter; there it curves concentric with the wheel, as far as the plumb line of this diameter; then it falls suddenly a decimètre (·328 ft.) at least, and finally

pursues its course with the slope permitted by the locality, Fig. 2927. Its breadth, immediately before reaching the floats, is a little less than theirs; it then increases and encloses the floats beyond the vertical diameter. By these dispositions, the water, on its arrival at the wheel, impinges upon it with all its mass, without experiencing a loss through the intervals; after that the lowering and enlargement of the wheel-course favours the clearing of the water, and does not obstruct its motion.

After what has just been said, the breadth of the floats is fixed by that of the course, and by the size of the intervals. Their height, in the direction of the arm of the wheel, ought to be such that in the greatest rising of the water against the first float struck by it, a portion of the fluid, which tends to run past its upper edge, although retained by the counter-float, shall not lose a part of its action: we prevent this loss by giving to the height of the floats about three times the thickness of the sheet of water in the course, without, however, exceeding 2·13 ft. The distance from float to float, measured upon the exterior circumference of the wheel, should be a little less than their height.

Their number, then, will depend upon the extent of the circumference or of the diameter, and this dimension is nearly arbitrary.

The dynamic effect of the wheel is proportionate to the velocity of the floats: it requires only this velocity, which is independent of the diameter. When the diameter is required, we usually determine it by the number of turns which it is proper the wheel should make in a certain time, in order that the transmission of motion to that part of the machine which does the useful work, and which should consequently have a certain velocity, should be effected with the greatest simplicity, and with the least gearing possible. This is accomplished in such a way that the wheel shall have a velocity and dimensions adapting it to fulfil the office of a *fly-wheel*, so as to maintain a suitable uniformity of motion. If u is the velocity at the extremity of the floats, N the number of turns wished in a minute, the diameter will be $\frac{60\,u}{\pi\,N}$, or $19{\cdot}1\,\frac{u}{N}$. For the case of good effect, we shall have nearly $u = 3{\cdot}08\,\sqrt{H}$; and consequently the diameter will be $\frac{58{\cdot}8}{N}\sqrt{H}$. Finally, in practice we never make it less than 13·12 ft., nor more than 26·25 ft.

According to the adopted size of the diameter, we shall give to the wheel the number of floats indicated below. This number is divisible by 4; from the fact that constructors are in the habit of putting an integral number of floats in each of the four quarters of the wheel. We may, besides, without any disadvantage, increase by 4 each of the numbers of the Table.

Diameter.	Floats.	Diameter.	Floats.
ft.	No.	ft.	No.
13·12	28	22·97	40
16·40	32	26·25	44
19·68	36		

Bossut, in raising the same weight by a small wheel of 3·346 ft. diameter, sometimes with 48, at other times with 24 floats, obtained effects which were in the ratio of 4 to 3, whence he concluded that it would be better to give a greater number of floats to wheels than is usually done. But his water-course was rectilinear, and in such a course the wheel takes positions in which the spaces between the flooring and the edge of the floats shall be the greater as their number is the smaller; whence it follows that a great quantity of water is lost without exerting any action. Smeaton, to whom this fact was well known, remarked that this no longer occurs, and that the effect is not necessarily diminished by lessening the number of floats, when we curve the flooring concentrically with the wheel, and that it was sufficient to give such a length to the curved part, as that one float might enter it before the other left.

Some mechanists have supposed that the dynamic effect is increased by inclining the floats upon the direction of the arm, and they have given them such an inclination. But what may be advantageous for a wheel plunging in an indefinite fluid is no longer so for one established in a mill-race. Bossut having compared the effects obtained with floats inclined 0°, 8°, 12°, and 16°, found that they were respectively as the numbers 1, 0·949, 0·956, and 0·998; so that in these experiments, the only ones with which we are acquainted, the inclination has been a disadvantage.

In the case only where a wheel might casually be plunged in the race of a canal (for we cannot admit that it is usual, inasmuch as its establishment then would be faulty, and would have to be changed), the inclination of the floats would favour their clearance; or rather, it would prevent the floats, after they had passed the vertical, from taking up and raising a certain quantity of water, which, acting in a direction opposite to the motion, would diminish the effect. This inconvenience is obviated in large wheels established upon the arms of a river, where the fall is very small, and where the floats are composed of different pieces, by giving them a slight inclination, but more and more as they approach the exterior circumference of the wheel.

Attempts have been made to increase the dynamic force, by means of lining the floats with borders or side pieces. But their action was inconsiderable in the case where the paddles which receive the impulse of the fluid are placed in a water-course. It will be still less upon the floats of a wheel; and in the experiments of M. Poncelet, made at a powder-mill in Metz, these flanges have augmented the effect but a fifteenth.

We produce, and with more certainty, an analogous effect, by fixing and enclosing the floats between two circular plates, similar to those which form the crown or shrouding of bucket-wheels.

In narrow wheels, cast-iron floats, slightly cylindrical, the axis of the cylinder being in the direction of the radius, produce the effect of these side enclosures.

When we put in motion a machine at rest, and for this purpose open the gate, the fluid is precipitated forcibly against the float which is opposite to it, rises and flows over all its parts; continually pressed by that which arrives without interruption, it exerts a greater effort than when the motion is established. A portion of this effort is put in equilibrium with that of the resistances to be overcome; the remaining portion acts, in the first moment, to break the adhesion contracted during the repose by the pieces of the machine which should move upon each other; and then, striving against the inertia of the masses, it accelerates more and more its motion. As the velocity of the wheel increases, its action becomes more feeble (since this action is proportional to the relative velocity); soon the acceleration, diminishing gradually, becomes insensible and as nothing; and the wheel, after a few turns, in consequence of the velocity impressed upon it, and in virtue of its inertia, continues to move, as it were, of itself, either with an entirely uniform motion, or with a velocity which, oscillating between near limits, may be reduced to a mean and continuous velocity.

The action of an impulse, or the dynamic effect produced by it upon the floats of a wheel, or, more exactly, upon a paddle well set in a water-course, and which yields perpendicularly before the fluid, is $\frac{P}{g}(V - v)v$.

Is it the same for a series of floats presented in succession to the current, or two or three at a time, and under different angles of inclination? Experience alone can afford us just ideas upon this subject: meanwhile, we assume that the action of the impulse upon the wheel is not equal, but of the same nature, and having the same form of expression as the above.

In this expression of effect, when the wheel is moved by the same current, v is the only variable. If $v = 0$, the effect will be nothing; a machine which does not move cannot produce any. It will still be nothing when $v = V$; a wheel which goes as fast as the current cannot receive action from it. It is moreover evident that v can never exceed V. So that the effect will increase according as the velocity of the wheel, starting at zero, shall increase; but only up to a certain point, beyond which this effect will decrease, returning to nothing when the velocity shall be equal to V; between these two extremes there will, then, be a *maximum* of effect. Differentiating the variable part of the expression, $(V - v)v$, and making this equal to zero, we have $V\,dv - 2v\,dv = 0$; whence $v = \frac{1}{2}V$; that is to say, that *a wheel with floats produces its greatest effect when its velocity is half that of the current.*

The effort of the water upon the float is $\frac{P}{g}(V - v)$; this will also be the value of the load of the machine, that is to say, of the sum of resistances which it can overcome, these quantities being equal.

For the case of *maximum* of effect, where $v = \frac{1}{2}V$, this load will be $\frac{PV}{2g}$. For the same case, the dynamic effect, being equal to this load multiplied by its corresponding velocity $\frac{1}{2}V$, will be equal to $\frac{PV^2}{4g}$, or, observing that $\frac{V^2}{2g} = h_1$, $\frac{1}{2}P h_1$. The greatest effect of which a current arriving at a machine is susceptible, with P of water, and a velocity due to h_1, is $P h_1$; that of a wheel with floats will therefore be only half of this. If the entire fall H had been made available, and experienced no loss of velocity, either at the gate or in the course, we should have $h_1 = H$, and for the *maximum* effect $\frac{1}{2}PH$. Whence we conclude, *that the greatest effect which can be produced by a current of water acting by its impulse upon a wheel with floats, and upon a hydraulic wheel in general, is but half of the greatest effect of which it is capable.* And yet we could never have arrived even to this half, but through suppositions which are not realized; it is a limit which we cannot attain, and from which we are usually far removed, as we shall soon see.

We pass to the modifications which experience must make in the results of a theory, which, moreover, we have only admitted with reserve. We shall devote some time to this subject, both because we are dealing with nearly the only wheel that is moved solely by the impulse of water, and because the field of experiment has been successfully explored by a man of superior merit, Smeaton. His observations were made, it is true, on a small scale, the model of the wheel being only 2 ft. in diameter; but they were so well directed towards the principal points of the problem to be solved, and executed with so much skill, that they enable us to recognize the principal circumstances of the motion of wheels with floats. It was only after Smeaton had satisfied himself that their results were conformable with those observed by him on large wheels, that he published them.

Upon the axle of a wheel a cord was wound, which passed over a pulley on the top of the machine, and which bore at its end a basin, in which were placed at pleasure various weights. The water was furnished to the wheel by a reservoir, which was constantly kept at the desired height.

The experiments were divided into classes and series: those of the same class all have the same opening of the sluice-gates; and in those of the same series, they moreover had the same height of reservoir, and consequently the same quantity and the same velocity of motive water, or the same dynamic force. The velocity of the fluid, at the moment of striking the wheel, as well as the passive resistances, were determined previously and directly by experiments of a very ingenious character, which may be found in the memoir of the author. These preliminaries having been established, a small weight was at first put in the basin; when the motion was well established and had become uniform, they counted the number of turns made by the wheel in 1′ or 60″, and thence deduced the velocity of the elevation of the weight: this was the first experiment of the series. Then the basin was lowered, and a heavier weight placed in it, and the time of raising it was taken. So, in succession, for a third, fourth, &c., weight, up to the weight which was so heavy

as to arrest the motion; the series of experiments was then completed. That term in which the product of the weight raised (adding to it the weight representing the passive resistances) into the respective ascensional velocity, was found to be the greatest, was the term of *maximum effect* of the series.

Smeaton in this manner made twenty-seven series of experiments, and he published a table presenting the circumstances relating to the experiment of *maximum* of effect in each series. The following Table, containing eighteen of these experiments, is an extract from it. The dotted transverse lines to be seen in it separate the six classes of experiments; from one class to the other the opening of the sluice-gate was gradually enlarged. The titles of the columns indicate their contents sufficiently well. We confine ourselves to the remark that, for each experiment, $h_1 = \frac{V^2}{2g}$, $H = h_1 \frac{\alpha}{\beta}$, α being the number of the experiment or of the horizontal line noted in the eighth column, and β the number in the ninth; H is the height of the water above the gate sill; $\psi = p\gamma$, γ is the corresponding number of the tenth column, and ψ represents, for each series, the weight which, put in the basin, would arrest the wheel.

Water expended in 1″. P	Velocity of Current. V	Velocity of Wheel. v	Weight raised. (Resistance.) p	Effect. pv	Coefficient concluded. n	Ratios. $\frac{v}{V}$	Ratios. $\frac{pv}{P h_1}$	Ratios. $\frac{pv}{PH}$	Ratios. $\frac{\psi}{p}$
lbs.	ft.	ft.		lbs. ft.					
4·583	9·166	3·125	·6336	1·98	0·74	0·34	0·32	0·16	1·30
4·05	8·541	2·916	·4972	1·45	0·71	0·34	0·32	0·17	1·33
3·566	7·812	2·698	·3784	1·021	0·67	0·35	0·30	0·16	1·37
2·975	6·77	2·437	·2519	·614	0·64	0·36	0·29	0·17	1·20
2·233	5·416	1·979	·1495	·296	0·63	0·37	0·29	0·18	1·11
1·9	4·375	1·666	·0972	·1620	0·61	0·38	0·28	0·16	1·08
. . .	. . .	. . .	. . .	. . .	. . .	. . .	. . .	. . .	. . .
5·7	8·75	3·203	·6525	2·090	0·66	0·37	0·31	0·18	1·27
4·75	7·50	2·708	·5000	1·354	0·72	0·36	0·33	0·19	1·15
3·9	6·56	2·604	·2922	·761	0·61	0·40	0·29	0·20	1·15
2·79	4·79	2·187	·1344	·294	0·60	0·45	0·30	0·21	1·11
. . .	. . .	. . .	. . .	. . .	. . .	. . .	. . .	. . .	. . .
5·95	7·499	3·02	·5579	1·685	0·68	0·40	0·32	0·23	1·25
5·50	6·874	2·786	·4379	1·219	0·63	0·41	0·31	0·22	1·24
3·80	4·999	2·447	·1798	0·440	0·62	0·49	0·30	0·23	1·04
. . .	. . .	. . .	. . .	. . .	. . .	. . .	. . .	. . .	. . .
5·981	7·08	2·812	·4967	1·397	0·63	0·40	0·30	0·24	1·09
4·366	4·999	2·551	·2093	0·534	0·63	0·51	0·31	0·24	1·08
. . .	. . .	. . .	. . .	. . .	. . .	. . .	. . .	. . .	. . .
5·916	6·249	2·843	·3823	1·087	0·61	0·46	0·30	0·24	1·06
5·116	5·208	2·562	·2439	·625	0·58	0·49	0·29	0·24	1·06
. . .	. . .	. . .	. . .	. . .	. . .	. . .	. . .	. . .	. . .
6·00	5·208	2·708	·2736	·741	0·64	0·52	0·30	0·25	1·08
1	2	3	4	5	6	7	8	9	10

The first four columns of the Table present the data of the experiment; the last six, the results deduced from them. Let us sum up these results.

A glance at the sixth column shows that the coefficient of reduction of the theoretic effect to the real effect is not constant, and consequently that the admitted theory does not adapt itself to all the circumstances of the movement of wheels with floats.

Its results, as to effect, are so much farther from those of experiment, as the velocity is more considerable, as we may see in the Table following, which answers to the only entire series of experiments which Smeaton has given us. The quantity of motive water used there was 4·46 lbs and its velocity 9·222 ft.

v	pv	n	v	pv	n
ft.	lbs. ft.		ft.	lbs. ft.	
4·691	1·512	0·52	3·117	1·751	0·67
4·363	1·671	0·57	2·756	1·714	0·69
3·773	1·671	0·59	2·296	1·967	0·71
3·510	1·765	0·64	1·706	1·280	0·71

The coefficient n does not present so great varieties in the experiments of the great table, which answer to the *maximum* of effect of each series: and even, making abstraction of some anomalous numbers, we have for the mean of each class (one only excepted) very nearly $n = 0{\cdot}64$; and consequently, E or $pv = 0{\cdot}64 . \frac{1}{2} P h_1 = 0{\cdot}32\, P h_1$.

This ratio of pv to Ph_1, immediately given by each experiment, is noted in the eighth column of the Table; it only varies from 0·28 to 0·32; and the mean term has nowhere exceeded 0·30. Nevertheless, Smeaton thought he had good cause to raise it as high as $\frac{1}{3}$ for great wheels; that is to say, to admit their effect to be $\frac{1}{3}$ of the force which the current possesses on its arrival at the floats.

The ratio of this same effect to the entire force of the motor, or m, indicated in the ninth column, is not so constant in its character as the preceding; it gradually increased from one class to the other, from 0·167 up to 0·25. So that, in the experiments of Smeaton, *the greatest dynamic effect was only from a sixth to a quarter of the entire force of the motor.* We doubt if in great machines, even supposing them well arranged, it attains this last value; though theory indicates it as double, or $\frac{1}{2}$ P H.

The ratio of the velocity of the wheel to that of the current gradually increased from one class to the other, that is to say, in proportion as the opening of the sluice-gate was greater, from 0·36 up to 0·52; it was, as a mean, 0·44. Smeaton does not admit over 0·40. Bossut, after a series of some experiments, also adopted this same number; but as the velocity of the current was measured at the surface, they have given too small a result; it would approach 0·50 in taking the mean velocity. We believe that in machines well arranged and well conducted we may very nearly attain this theoretic limit; and, with some authors, we shall adopt $v = 0{\cdot}45\,V$, always for the case of *maximum* of effect.

Finally, the last column shows that the load which arrests the wheel is only from one to two tenths greater than the load for the *maximum* of effect. But according to theory it should be double; indeed, the load ψ, corresponding to the velocity $v = 0$, is $\frac{PV}{g}$; and that which corresponds to the *maximum* is $\frac{PV}{2g}$, p. 1514.

The results we have just given refer to the case where the velocity of the wheel is found to be the most advantageous ratio to that of the current at the moment of striking the floats. But usually this is not the case; the effect is less, and its coefficient n, experiencing great variations, as we have seen in the small Table (p. 1515), can never be expressed by a general formula.

However, when the velocity of the wheel does not exceed certain limits, one-third to two-thirds that of the current, without the risk of any notable error, especially in excess, we may take ·60 for the coefficient, and admit

$$E = 0{\cdot}60\,\frac{P}{g}\,(V - v)\,v = {\cdot}01864\,P\,(V - v)\,v = 1{\cdot}1640\,Q\,(V - v)\,v.$$

The velocity V, with which the water arrives at the floats, is always difficult to determine. It meets, as we have seen (p. 1512), with losses between the sluice-gate and the wheel; without them, we should have $V = \sqrt{2gh}$; and h, the difference in level between the surface of the reservoir and the centre of percussion of the floats, would be easily measured.

Smeaton, who made observations upon the losses really experienced, and who has sometimes seen them as high as one-fifth of the velocity, has also remarked that they diminish, when the height of the opening of the gate increases; so much, says he, that in mill-sluices, when great volumes of water are discharged, under moderate heads, V will be very nearly equal to $\sqrt{2gh}$. M. Poncelet has also observed that the loss of velocity is less in great openings; and that through an opening ·7217 ft. in height, and even with a head of 4·593 ft., he found $V = 0{\cdot}99\,\sqrt{2gh}$. Still, to prevent mistakes, and supposing that the sluice-way is otherwise suitably arranged, we will admit $V = 0{\cdot}95\,\sqrt{2gh} = 7{\cdot}6215\,\sqrt{h}$; and consequently we shall have generally $E = 1{\cdot}1642\,Q\,(7{\cdot}6215\,\sqrt{h} - v)\,v$. When v is very near to $\frac{1}{2}V$, this expression will be reduced to $E = 16{\cdot}907\,Q\,h$.

The ratio between the effect and the entire force of the motor will be established in a manner still less sure. Smeaton, even in the case of *maximum* effect, found it vary from 0·16 to 0·25. So that we shall have nearly always $E < 0{\cdot}25\,P\,H$ or $< 15{\cdot}612\,Q\,H$.

Finally, we but little regret our inability to give a more precise expression of the effect of wheels with floats moved by the impulse of water, inasmuch as this kind of wheel is nearly out of use.

Notwithstanding this remark, suppose we are to establish a wheel to put in action a blast-engine, appointed to throw into a high furnace for melting iron by means of coal or of coke, three-quarters of a cubic mètre or 26·487 cub. ft. of air in a second, with a velocity of 426·51 ft.; and that we have upon a small river a fall of 5·4134 ft. We wish to determine the volume of water required to move the machine.

That we may have three-quarters of a cubic mètre of air in the furnace, in view of the inevitable losses, we must count upon a cubic mètre. At the level of the sea, and at zero of the thermometric temperature, it would weigh 2·8671 lbs.; at the site of the mill it will weigh only 2·6906 lbs.; we will admit 2·7568 lbs. The height due to the velocity of 426·51 ft. is 2821·57 ft. Thus the useful effect to be produced is equivalent to raising 2·7568 lbs. to a height of 2821·57 ft., or 1075 km. = 7778·59 lbs. ft. in one second. By reason of the passive resistances of the wheel, of the machine and air-pipe, we will augment this number by a third, and we shall have for the dynamic effect, 10371·45 lbs. ft. = E.

On the fall of 5·4134 ft., we will take ·98427 ft. for the distance between the centre of percussion of the floats and the lower level; and there will remain but 4·4292 ft. for the value of h. Thus the equation will be $10371{\cdot}45 = 16{\cdot}907\,Q \times 4{\cdot}4292$; whence $Q = 138{\cdot}49$ cub. ft. We will reckon upon 141·266 cub. ft. This water, having to run in a water-course with a velocity of $16{\cdot}04$ ft. $= 7{\cdot}6215\,\sqrt{4{\cdot}4292}$, the section of the fluid sheet in it will be 8·888 sq. ft., and as its thickness should not exceed ·6562 ft., its breadth must be 13·418 ft.; let us put it at 13·45 ft.

Leaving a space ·0492 each side between the course and the wheel, we shall have for the breadth of the latter, that is to say for the breadth of the floats, 13·353 ft. Their height will be 2·132 ft.; for under the wheel, the water will rise 1·97 ft. and more: they will therefore be furnished with counter-floats ("*contre-aubes*"). Their number will be forty, the diameter to be given to the wheel being 20·34 ft.; each will be formed of four planks, ·574 ft. wide, and inclined gradually upon the radius 0°, 10°, 20°, and 30°; the three iron supports to hold them will have three bends or angles of 170°. The wheel will make about seven turns per minute, and its motion will be communicated without gearing to the pistons of the blast-cylinder, either by means of cranks, winches, balance-beams, or by cams, in the form of eccentric wheels, which will accompany them in their ascent and descent.

The float-wheel just described, exceeding 13 ft. in width, consuming 141·26 cub. ft. of water per second, with a fall of 5·413 ft., having thus a force equivalent to 89 horse-power, will be one of the most efficient which we can have. If charcoal were used in the furnace, we should not require over 17·66 cub. ft. of air per second, with a velocity of 328 ft. A volume of water of 44·14 cub. ft. would be sufficient to move the wheel. We should give it a width of only 4·92 ft.; its floats might be plane and 1·968 ft. deep.

Wheels established in a Circular Water-course or Curb.—We have seen, p. 1512, that the most advantageous disposition of the course for float-wheels is in curving it under the lower part of the wheel and concentric with it, for a short length (one or two of the float spaces), and consequently a very small height. The advantage increases as the height or versed sine of the curved part is greater; so much so, that now they are made as great as possible compared to the fall; and we give them two-thirds, three-quarters, and even a greater proportion of its value. In this way we obtain wheels of very good effect, perhaps the best that can be had with small falls, those of 8 ft. and less. Fig. 2928 gives a good idea of their disposition.

2928.

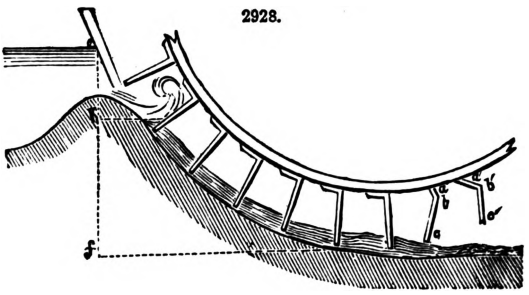

Manifestly, the circular course or curb should be constructed with great care, and of masonry, if possible; its apron, or cylindrical surface, should be very smooth, well centred, and so that its axis shall be exactly the axis of rotation of the wheel which the *curb* or *mantle* encloses. The space to be left between its surface, that of the bottom as well as its sides, and the edges of the floats, should be from 0·0328 ft. to 0·049 ft. We should never make them less; in the best suspended and best made wheels, after a while, some portions yield or wear out, some joints begin to play; and if the space is too small, the floats will soon rub and scrape against the curb. This consideration should induce us to establish very solidly the walls or pillars upon which the *gudgeons* are supported. The breadth of the course, as well as that of the wheel, should be such that the water, running freely over its bed, might not have a depth of over 0·656 ft., nor under 0·049 ft. The diameter of the wheel will be determined in the manner and according to the considerations shown in p. 1513; generally it is from 16·4 ft. to 23 ft. The number of the floats will be such as before described, p. 1513. Their height should never be less than three times the thickness of the fluid sheet of water in the course. They should be placed in the direction of the radius. Still, good millwrights give them a slight inclination; quite often they incline them to the radius with an angle $90° + a$, a being given by the equation $\cos. a = 1 - \frac{2H}{D}$. Sometimes they give the forms indicated in Fig. 2928 by $a\,b\,c$, or $a'\,b'\,c'$. The sluice-gate should be made and disposed with all the precautions indicated in p. 1512, and in such a manner that the water should fall very nearly perpendicular upon the float receiving the impulse. Better still, if it can be done, when we cause the water to fall by simply flowing over a sill established at the top of the curved apron.

Water acts upon wheels established in such a course, both by its impulse and by its weight. If from the point e, Fig. 2928, taken at the surface of the reservoir, we drop the perpendicular $e\,f$, upon the horizontal line passing through the bottom of the wheel, and let k be a point taken at the level of the one where the water arrives at the first float struck; $e\,f$ will represent the total fall H, and $e\,k$ the portion h of this fall employed in the generation of the velocity with which the impulse is made. After this has taken place the water spreads out upon the float, descends with it pressing upon its upper surface; so that the fluid which is in the course, throughout the whole height $k\,f$, presses upon all the floats found there, and urges them in the direction of motion; this action of the weight will be expressed by $P \times k\,f$ or $P\,(H - h)$. The action of the impulse is expressed by $\frac{P}{g}(V - v)\,v$, or $P\,(h - h' - h'')$; or, more exactly still, with the notations, p. 1511, and according to what we shall hereafter establish (see OVERSHOT WATER-WHEELS), by $P\,(h - \mu\,h - h' - h'')$, $\mu\,h$ referring to losses experienced in the velocity of the current between the gate and the wheel. Uniting these two partial actions, the total action, or the effect $p\,v$ which results from them, will be

$$P\,\{(H - h) + h - \mu\,h - h' - h''\}.$$

We have two corrections to be made for this expression.

First, even when all the water P expended shall have acted by its impulse upon the first float it meets; beyond that, when it descends in the course, pressing upon the succeeding floats, the part of the fluid which is found in the intervals between the edges of the floats and the sides of the course exerts no pressure, and has no effect, and consequently it should be subtracted from P in

the expression $P(H - h)$. The amount of this part cannot be rigorously determined. Still, if we consider, 1st, that the resistance experienced by this water against the sides of the course diminishes the velocity which gravity tends to give it, more and more during its descent upon the bed of the curb; 2nd, that this velocity is still more diminished by the continual obstructions which the water meets in its passage through the spaces, varying at each instant, for a wheel is never perfectly centred; 3rd, finally and especially, that the velocity is altered by a continual mingling of the water in the spaces with that resting upon the floats, we may conceive that in nearly every case, the velocity of one will be that of the other, and consequently equal to that of the floats. In such a case, if we designate by A the section of the fluid sheet in the course, and by a that which answers to the spaces, $P\frac{a}{A}$ will be the portion of the fluid which produces no effect; we must deduct this from P in the expression of effect, which will become $P\left(1 - \frac{a}{A}\right)(H - h)$.

Secondly, the portion of the bottom of the wheel which plunges in the water of the course, there loses a part of its weight equal to the weight of the fluid which it displaces. In consequence of this loss, there does not exist an equal distribution of the weight of the wheel around the axis of rotation; and the wheel tends to turn against the current; let p' be the weight representing the effort of this tendency; this will be a new resistance which the motor must overcome, and it should be added to the other efforts or resistances of which the sum is p. We have then, n being the coefficient of reduction of the results of calculation to those of observation,

$$(p + p')v = nP\left\{(H - h)\left(1 - \frac{a}{A}\right) + h - \mu h - h' - h''\right\}.$$

The example which we shall shortly give will show us the manner of applying this formula.

For common use, it may be simplified. The quantities p' and $1 - \frac{a}{A}$, supposing the constructions equally well made, will be very nearly proportional to the force of the machine, or to P; and they may consequently be comprised in the value of n. Moreover, we shall see (OVERSHOT WATER-WHEELS) that the quantity $\mu h + h' + h''$ always exceeds $\frac{1}{2}h$, and that it is very nearly $\frac{2}{3}h$. So that the equation is simply $E = nP(H - \frac{2}{3}h)$.

Let us determine the coefficient n. Let us see its value in a machine, perhaps the most perfect of the kind we have discussed; it is a wheel established at the crystal-ware manufactory of Baccarat, near Lunéville, by English constructors, and similar to those in use in their country. It is 13·14 ft. in diameter, with a breadth very nearly the same; it has 32 floats 1·312 ft. deep; and it is hung in a circular course, 6·037 ft. versed sine, upon a fall of 6·758 ft.; the space between the sides of this course and the edges of the floats is reduced to some millimètres, says M. Morin. The motive water was let upon the wheel over a weir 12·79 ft. long, with the head h_0 above the lip noted in the following Table. According to the experiments of M. Castel, the volume of water discharged will be $3{\cdot}5567 \times 12{\cdot}79\, h_0 \sqrt{h_0}$; whence we have the values of P. The fall was 6·037 ft. + h, and we have represented by H′ the factor $H - \frac{2}{3}h$. As for p, the sum of the resistances to motion, it is the result of experiments made by M. Morin, by means of a dynamic brake: to the effort immediately indicated by the brake, this author has added the passive resistances, which he determined by calculation; finally, as they do not reach to $\frac{1}{15}$ of p, a little uncertainty respecting them would be but of small consequence.

v	p	P	h_0	$\frac{pv}{PH'}$	$\frac{pv}{PH}$
ft.	lbs.	lbs.	ft.		
7·64	108·04	1726·8	·7185	0·762	0·707
3·805	227·10	1740·1	·7217	0·792	0·734
3·182	269·06	1740·1	·7217	0·783	0·726
2·723	306·50	1715·8	·7152	0·777	0·720
2·395	348·40	1715·8	·7152	0·773	0·716
2·132	385·90	1726·8	·7185	0·755	0·700
Mean		1727·5	·7184	0·772	0·717

Thus, for the machine at Baccarat, n would be, as a mean, 0·772. But we rarely meet a wheel with so small a play as this, and it will only be for machines very carefully constructed and maintained that we can admit $E = 0{\cdot}75\,P(H - 0{\cdot}7\,h)$. The above experiments give 0·717 for the ratio of pv to PH. But where, as for the wheel upon which they were made, shall we find the height of the circular curb so great as $\frac{9}{10}$ of the fall? Most frequently this height, or more exactly that upon which the water only acts by its weight, is not over one-third, and we generally have from 0·60 P H to 0·65 P H. In the application, we shall not use these expressions, but the preceding, $0{\cdot}75\,P(H - 0{\cdot}7\,h)$; diminishing the numeric coefficient a little if the machine is in an ordinary condition.

Upon a canal fed by a river we have an iron-mill, to which we wish to add a rolling mill of thirty horse-power. The available fall at low water is 8·202 ft.: we will employ a wheel moved by the weight of the water. It is required to indicate the volume of water necessary to put it into action, and the principal dimensions to be given it.

We require for the working of the rollers that the wheel should make six turns per minute, with a velocity of 7·38 ft. Accordingly, its dynamic radius should be 11·745 ft. (p. 1513), and we

will make the whole diameter 24·278 ft. It shall be a wheel with floats, of which there shall be forty-eight, and formed of two planks; the small one will be placed in the direction of the radius, and will be ·722 ft. in height; the greater will make with it an angle of 160°

$$\left(= 90° + 70°;\ 1 - \frac{2\,H}{D} = 1 - \frac{15·748}{24·278} = \text{cos. } 69° 27'\right),$$

and we will give it a height of 1·397 ft., so that the two united shall make 1·968 ft. in the direction of the radius. The counter-floats will be 1·148 ft. in breadth. We will sacrifice ·328 ft. of the total fall for lowering the apron immediately below the wheel. The height H will then be 7·874 ft. We take from this 6·562 ft. for the height of the curve to be given to the circular part of the course, and there remains 1·312 ft. for h; thus $H - h = 6·562$ ft. We have seen that $\mu h + h' + h''$ was greater than $0·5\,h$, and we have made it $0·7\,h$; consequently,

$$h - \mu h - h' - h'' = 0·3\,h = ·3936 \text{ ft.}$$

After this, the equation will be $(p + p')\ 7·382 = 0·90\,P\left[6·562\left(1 - \frac{a}{A}\right) + ·3936\right]$. Let us determine the unknown quantities.

The weight p, representing the sum of resistances to the motion of the wheel, is given by the conditions of the problem; the dynamic $p\,v$ being equal to the action of thirty horse-power, or to 16280·7 lbs. ft., and v being equal to 7·382 ft., we shall have $p = 2205·4$ lbs. To determine p', A and a, we must have the dimensions of the sheet of water which descends upon the curved bed, and consequently know P, which is precisely the quantity sought. Let us take at first an approximate value: for this purpose let us make $p' = 132·32$ lbs., and $\frac{a}{A} = 0·1$; these quantities substituted in the equation, give P = 3043·5 lbs., or Q = 48·736 cub. ft. Since the velocity of the fluid sheet should be 7·382 ft., its section, or A, will be 6·6021 sq. ft. $\left(= \frac{48·736}{7·382}\right)$. We will admit 0·6562 ft. for the thickness of this sheet; its width, or that of the course, will be 10·061 ft. Leaving ·065 ft. of space between the sides of the course and the edges of the floats, we shall have $a = ·0656\ [10·061 + 2\ (·6562 - ·0656)] = ·7377$ sq. ft.: thus $\frac{a}{A} = ·11173$. To get p', we will observe that eight floats at least plunge continually in the water of the course, and that they are submerged for a depth of ·5906 ft. in the direction of the radius, or ·6299 ft. in reality, by reason of their inclination of 160° to the radius. Since the width of the floats is 10·061 ft. − 0·131 ft., or 9·930 ft., and their thickness ·0984 ft., the weight of the fluid displaced by each of them will be 38·491 lbs. (= 9·9411 × ·6299 × ·09842 × 62·45): we will carry it up to 41·9026 lbs., on account of the ends of the supports, which also plunge into the water. This weight is as a force tending to lift the floats vertically: if we estimate it in the direction of the motion of rotation, it will be 41·9026 sin. i, i being the angle made by the radius of the wheel with the vertical, at the centre of immersion of the floats: this radius being 11·844 ft., and the dynamic radius being 11·745 ft., this force referred to the extremity of this last, or augmented in the ratio of these two numbers, will be 42·255 sin. i. For the eight floats, we must multiply 42·255 by the sum of the eight values of the sin. i, which will be 4·52049, the angles being, as a mean, 10°, 17½°, 25°, 32½°, 40°, 47½°, 55°, and 62½°. Thus we shall have $p = 191·01$ lbs.

Substituting these values in the equation, it will become $(2205·4 + 191·01)\ 7·382 = 0·90\,P$ $[6·562\ (1 - ·11173) + ·3936]$, and it will give for the second value of P 3158·8 lbs.; then A = 6·8523 sq. ft., $a = ·7627$ sq. ft., $p' = 201·13$ lbs. For the third value of P, we have 3169·2 lbs., and 10·466 ft. for the width of the course. It will be well to augment this width when the water arrives in greater quantity; we may carry it to 10·63 ft., and the width of the floats will consequently be 10·508 ft. The force of the motor, 3169·2 lbs., falling 8·202 ft., is equivalent to forty-eight horse-power; the dynamic effect is but two-thirds of this. The rolling mill of which we have been speaking, and whose effect is but that of thirty horses, is of an ordinary kind: there are those which, with great velocity, produce the effect of fifty horses and upwards.

In the commencement of our observations upon wheels contained in a circular course, we remarked that it was best to increase the height of the course, so as to reduce as much as possible the distance between the float-board, which receives the first impulse of the fluid, and the reservoir. This is, in fact, the method of obtaining the greatest dynamic effect, with the least consumption of water; but this condition, though worthy of great consideration, is not the only one which determines the choice and disposition of the wheel to be used. For example, where we may have an abundance of water, we should consider less its economy, and rather regard the expense required in a construction made according to the rules which we have given: thus, instead of a small distance between the float-board impinged upon and the reservoir, we may sometimes have a very great one. This is the case with the iron-mills of the Pyrenees, where there are great falls and large streams; the wheels established there are otherwise remarkable for their simplicity and the solidity of their construction. We will give a brief description of them.

They are from 8·20 to 9·84 ft. diameter, including the floats; their circumference is formed by four segments or felloes of oak, extending from one arm to the other; these arms consist of two strong timbers, crossing the shaft, with a thickness of 0·49 ft. and a width of 1·148 ft. The floats, twenty-four in number, are 1·148 ft. deep and 0·2296 ft. thick: the middle is hollowed out to half the thickness. Upon this hollow, as upon the rimmed plates of Morosi, falls a great fluid vein, issuing from a nearly vertical trough, whose mean length is 9·84 ft. Above, there is a wooden reservoir, commonly with a depth of 6·56 ft., and as much in breadth. A little below the orifice of issue of the trough, the water strikes the floats; beyond this it, as well as the wheel, is contained in a circular curb or sweep, whose sides are 0·98 ft. distant from the edge of the floats.

Thus, upon a fall of 24·60 ft., or rather of 21·325 ft. real fall, admitting as a mean 3·2809 ft. of water in the reservoir, about 14·764 ft. will serve for the impulse, and there remains but 6·562 ft. for the weight to act. The orifice of the trough being usually 0·885 ft. by ·722 ft., the head being 13·124 ft., and taking 0·97 for the coefficient of contraction, the discharge or consumption of water will be 18·01 cub. ft.

Generally, in the forges of the Pyrenees, it is computed that, with a fall of from 22·96 to 26·25 ft., there is required 17·658 cub. ft. of water per second to move a hammer of from 1323 to 1543 lbs. a height of from 0·984 to 1·476 ft., which strikes from 100 to 120 blows per minute.

A bucket-wheel of 19·68 ft. diameter will produce a like effect with but 11·654 ft. of water only: the economy would be great, and advantage should be taken of it in a place where there is a scarcity of water; but where there is an abundance, it is possible that it may be better to establish one of the float-wheels just described, than to employ a wheel of double the height, nearly eight times the width, and whose construction, establishment, and maintenance will require a much greater expense.

Wheels moving in an Indefinite Fluid.—These wheels are principally used in boat-mills, or mills upon barges moored in the middle of rivers. We suppose, in this case, that there is no water-course or other construction to increase the natural velocity of the current on its arrival at the wheel. The diameter of these wheels never exceeds from 13 to 16·4 ft. The floats are usually twelve in number; it is thought, however, there may be an advantage in increasing this number to eighteen, and even to twenty-four. According to Fabre, who has given particular attention to this kind of machine, the height of the floats should not exceed $\frac{28}{100}$ of the radius of the wheel, measured to the centre of percussion; it will thus be at most a quarter of the entire radius; quite often it is but a fifth. This author made them to plunge entirely in the water, which may be an advantage in deep streams, when, by reason of some peculiar circumstance, the greatest velocity is below the surface of the current; but generally their force is greater when a portion of the float (in its vertical position) is elevated above the surface, the portion below remaining the same. Their width varies from 8 ft. to 16·4 ft.

Deparcieux, after having made the very important observation that water produced its greatest effect when acting by its weight (for it was before supposed that it exerted its greatest action by its impulse), having remarked that the water rose upon the floats, as upon an inclined plane, as soon as their edges reached the surface of the current, and that it acted then by its weight, supposed he could increase this action by giving the floats a greater inclination. To verify this conjecture, he made a small wheel, 2·85 ft. in diameter, carrying twelve floats 0·72 ft. in height by ·656 in width, and to which, by means of an ingenious mechanism, he gave such an inclination as he deemed best. This wheel raised different weights by means of a cord passed over a pulley fixed above it. It was placed upon the small river Bièvre, near Paris, in a place where the velocity of the current was 1·148 ft., and it there served for many series of experiments. We confine ourselves to citing the results of one of them. The arc plunged in the water was 96°, and the weight elevated was 2·85 lbs. The angle of inclination of the floats referred to the radius drawn to their interior edge, is noted in the first column of the subjoined tabulated form; and the time of one revolution of the wheel, corresponding to this angle, is in the second column. The angle of 30° was that of the greatest effect; it increased it in the ratio of 18 to 39.

Angle of Inclination.	Time of One Revolution.	Angle of Inclination.	Time of One Revolution.
°	″	°	″
0	39	30	18
10	25	40	20
15	19		

Bossut, with nearly the same apparatus, also made a series of experiments. In one of them, the inclination of the floats being successively 0°, 15°, 30°, and 37°, the effects obtained were found in succession to be as the numbers 1000, 1081, 1083, 1037. Here, also, the angle of 30° was found to be the most advantageous, though the increase was much less than in the experiment of Deparcieux.

Even if there should be some exaggeration in the results given by the last philosopher, it is none the less positive that the inclination of the floats increases the effect of these wheels. The best method of effecting this inclination appears to us to be that already mentioned, p. 1513 and p. 1516, which consists in inclining gradually the cross-pieces which form the floats.

Wheels with floats moving in an indefinite water-course having been the object of the first theory given upon wheels in motion, we shall now dwell for a while upon this matter.

Before the eighteenth century, machines had only been considered as in a state of equilibrium. Suppose it had been a hydraulic machine; after having estimated the effort of the current upon it, a subject to which Galileo and Descartes had made some contributions, they calculated the weight which, placed at the extremity of a lever, for example, should put it in equilibrium. If, then, it was necessary to move this weight, they either diminished it, or the length of the lever, until they attained the desired velocity. But to what point should the weight be diminished, or the velocity increased, that is to say, the velocity of the wheel, compared to the velocity of the current, to obtain the greatest effect? As to this, they were in complete ignorance.

Parent, of the Academy of Sciences in Paris, directed his attention to this object, and, after long researches, remarked that the increase of velocity should have a limit, beyond which the effect, in place of increasing, would go on decreasing; and consequently that there was a maximum, the knowledge of which would be of great importance in the establishment of machines. He sought

for it, and published the result of his calculations in a memoir, quite remarkable for the period in which it was written. After having unfolded some new principles upon the action of gravity, upon that of motors, and upon its measurement, he shows that in a hydraulic wheel established on a current, the effort of the water against the floats is only due to the excess of its velocity over theirs; and he makes it proportional to the square of this excess. He furthermore admits that it is equal to the weight of a prism which has for its base the part of the float struck by the fluid, and for its height the simple height due to the difference of these two velocities, so that we have $E = 62{\cdot}45\, s \frac{(V-v)^2}{2g} v$. In the case of *maximum* of effect, the variable factor $(V-v)^2 v$, being differentiated and made equal to zero, gives $r = \frac{1}{3}V$; that is to say, that for the greatest effect, *the velocity of the floats should be one-third that of the current.* This value of v, substituted in the expression of the effort, changes it to $62{\cdot}45\, s \frac{4}{9} \frac{V^2}{2g} = \frac{4}{9} 64{\cdot}45\, s h = \frac{4}{9} \Pi$, making $62{\cdot}45\, s h = \Pi$; thus the *effort will be* $\frac{4}{9}$ *of the weight of equilibrium* Π, employing the expression of Parent. Multiplying this effort by the velocity, $\frac{1}{3}V$, which answers to it, we have $62{\cdot}45 \frac{4}{27} s h V = \frac{4}{27} P h$; that is to say, that the *dynamic effect of such a wheel will be* $\frac{4}{27}$ *of the force of the current* ("*of the natural effect of the current*," in the words of the author).

Such is the theory of Parent, regarded as a great step made in the science of mechanics, and, in fact, it was the first. It was adopted by all the savans of Europe, and applied to all wheels with floats. Nevertheless, Borda, in Mémoires de l'Académie des Sciences de Paris, 1767, showed that it could not be applied to wheels with floats established in a course; that here all the particles which pass, with a velocity V, with a section s of fluid running in the course, arrive upon the wheels and impinge against them; that their number or volume is s V, and their mass $\left(\frac{62{\cdot}45\, s V}{g} = \right) 1{\cdot}9404\, s V$; that, in the impulse, they lose $V - v$ of velocity, and consequently $1{\cdot}9404\, s V (V - v)$ in quantity of motion; now, the quantity of motion lost by a fluid vein against a plate measures the force or effort of the impulse; thus the effort of the current against the floats will be $1{\cdot}9404\, s V (V - v)$. This theory of Borda, for wheels contained in a course, is universally admitted; it has been so in this article. It seems to us that it is applicable also to wheels moving in an indefinite fluid. Here, also, all the particles which pass with a velocity V, with a section s of current equal to that of the float, excepting some partial deviations, which we shall hereafter notice, arrive with an impulse; their volume is also s V; and they lose, in the collision, a quantity of motion expressed by $1{\cdot}9404\, s V (V - v)$.

For wheels established upon an indefinite water-course, as well as for those contained in a course, we have $E = n\, 1{\cdot}9404 . s V (V - v) v$. The section s will be that of the vertical portion of the float which plunges in the water, and n will be a coefficient comprising the corrections due to the deviations of the fluid fillets on their approaching the wheel, to the non-pressure at the back of the floats, &c.

The experiments of Bossut, made upon a small wheel, afford us this coefficient. It was 3·198 ft. in diameter; it had twenty-four floats, 0·442 ft. in breadth, and plunging 0·354 ft. in a current having a velocity of 6·081 ft. By means of a cord, wound round its axle, it was made to raise weights, gradually increased, which naturally reduced more and more the velocities. These weights and their respective velocities are noted in the adjoining Table. It may be remarked that the passive resistances of the machine are not comprised in the weight p'; so that $p' v$ represents only the useful effect, and not the total effect or force impressed upon the wheel. Consequently, the values of n, calculated by the formula $p' v = n\, 1{\cdot}9404\, s V (V - v) v$, will indicate too small coefficients or ratios between the real and theoretic effect; and the coefficient, which was 0·84 for good velocities, would probably have been about 0·90, if regard had been paid, as it should have been, to the passive resistances. On the other hand, M. Poncelet, who made observations upon the wheels of some boat-mills established upon the Rhine, at Lyons, and who has remarked that the theory of Borda expressed the results of experiments better than that of Parent, has only had 0·80 for the coefficient. Taking the mean term 0·85, we have $E = 1{\cdot}6493\, s V (V - v) v$.

p'	v	n		p'	v	n	
		Borda.	Parent.			Borda.	Parent.
lbs.	ft.			lbs.	ft.		
3·149	3·687	0·706	1·79	5·398	2·641	0·842	1·50
4·044	3·271	0·773	1·67	5·487	2·595	0·845	1·47
4·951	2·851	0·825	1·55	5·668	2·486	0·846	1·43
5·129	2·772	0·832	1·53	5·848	2·345	0·847	1·37
5·308	2·680	0·838	1·51				

We give, in the above Table, the coefficients derived from the formula of Parent. They present more variations, especially in the neighbourhood of the *maximum*, than those of the formula of Borda; which disposes us to favour the latter. Furthermore, his coefficients are less than 1; the others, on the contrary, are greater. Now, in machines there are so many causes of loss in the effect, causes which theory cannot take into account, that usually the results of calculation exceed those of experiment, and consequently the coefficient of reduction must be a fraction.

In the experiments above cited, the *maximum* of effect corresponds to the velocity of 2·641 ft., which is to that of V, or to 6·081, as 0·434 is to 1; making, then, $v = 0{\cdot}434$ V, the above expression of effect becomes $0{\cdot}405\, s V^3$ (in ft. and lbs.); let us set it at ${\cdot}400\, s V^3$, a very simple value of

the total effect which this wheel can produce. This is equivalent to $\cdot 4122\, P\, h$ (considering that $P = 62\cdot 45\, s\, V$, and $h = \cdot 01553\, V^2$). We have said (p. 1515) that the effect of wheels with floats, placed in a rectilinear course, was but $0\cdot 32\, P\, h$; that of wheels moving in an indefinite water-course would be about a third greater. But how much more considerable is the volume of water that has been used!

The paddle-wheels which steamboats carry on each of their sides, and which, like oars, produce a progressive movement, are also similar to these wheels. Consequently, the theory which we have given can be applied to them. The determination of their effect, however, becomes involved with a new velocity, that of the boat. Moreover, it requires the determination of two coefficients by experiment; one, relative to the resistance of the boat; the second regards the action of the fluid upon the wheels. They are placed in circumstances so different from those of boat-mills, that the coefficients determined for the latter cannot serve for the former without verification and some modifications. M. Poncelet, it is true, has made some experiments, by means of the dynamometer, upon the effort exerted by the wheels of a boat made fast in stagnant water: but these are not wheels of a boat in motion, and the experiments do not seem to us to be varied enough.

Until we have some experiments entirely satisfactory, profiting by those for which we are already indebted to the philosopher just named, and applying here the theory of Parent, which leads to a more simple expression, we will give, but provisionally, for the expression of the dynamic effect of a steamboat, and consequently for the expression of the force required to be impressed on it,

$$\cdot 1142\, S \left(\sqrt{\frac{S}{s}} + 3 \right) (\pm V \mp u)^3;$$

S being the immersed section of midships of the boat, s the surface of that portion of the paddles which is immersed (that of two paddles supposed to be in a vertical position), V the velocity of the fluid, u the absolute velocity of the boat. The upper signs refer to the case where the boat ascends, and the lower signs to that where it descends the stream. The expression just given shows that the moving force to be employed will be so much smaller, as the impelled surface of the paddles is greater. But the trouble from large wheels upon boats causes us to give these paddles a width but two or three times their height, which is from a third to a fourth of the radius.

Wheels with Curved Floats.—Although undershot wheels with plane floats are not impressed with over a fourth or a fifth of the motive force applied to them, they have still some advantages, which lead to their frequent use; their establishment, even when well made, is attended with small expense, and they may receive quite a great velocity without any notable loss of their effect. M. Poncelet has undertaken, with a full preservation of these advantages, to avoid their enormous loss of force, and has accomplished his purpose in a most satisfactory manner by substituting curved floats for the plane. He gave a description of his important machine in a Memoir (for which a prize was awarded by the Institute in 1825), to which he afterwards made some additions, and which is in the hands of all engaged upon hydraulic machines; we shall confine ourselves to a succinct exposition of the theoretic principle of this wheel, and of the effect of which it is capable.

Let us suppose a wheel with curved floats, and so disposed that when a float has arrived at the bottom of the wheel, the inferior element of its curvature is horizontal and its superior elements vertical. We will at first admit that it is in a state of rest, and that a fluid fillet, animated with a velocity V, arrives horizontally upon its inferior element. Continuing to advance, it will rise up along the curve; during its elevation, gravity will by insensible degrees deprive it of its velocity V; and it will be entirely lost, conformably to the general laws of the ascent of heavy bodies, when it shall have attained the height $\cdot 015536\, V^2$: then it will descend; it will rejoin the float if it had passed it; it will follow it, pressing again upon it; gravity, during its descent, will restore the velocity of which it had deprived it during the ascent, and it will quit the float with the velocity V which it possessed on its arrival. Suppose, now, that the wheel turns with the velocity v at its periphery. As soon as the fillet, having always the velocity V, attains the inferior element of the lowest float, it will have, relatively to it, the velocity $V - v$; it is with this relative velocity that it commences advancing and ascending upon the curve; it will rise nearly to the height $\cdot 0155$ ft. $(V - v)^2$; and after descending, and on quitting the inferior element, it will have then in relation to it the velocity $V - v$. But this element moves itself with a velocity v in a direction exactly opposite; consequently, the absolute velocity of the fluid at its issue will be $V - v - v = V - 2v$. If $v = \frac{1}{2} V$, it will be $V - V$, or zero; that is to say, if the velocity of the wheel is half of that which the fluid had on its arrival, its absolute velocity on quitting the floats will be nothing. We have here, then, a motive current which experiences neither shock nor loss of velocity the instant it joins the wheel, and which possesses none at the moment of quitting it; it has then expended upon it all its motion and has communicated to it all its force; the two conditions for the production of the greatest possible effect, are thus fulfilled in the wheel of M. Poncelet, such as we have represented it. Thus, if P is always the weight of the fluid furnished by the current in 1″, and h_1 the height due to the velocity V, the effect will be expressed by $P\, h_1$.

But what is true for a simple fillet is no longer so for a mass or sheet of water of a certain thickness. Its molecules strike the floats, making an angle more or less great with the elements impressed, and so lose both velocity and force. This mass, at the moment of its quitting the floats, no longer moves in a direction exactly opposite to them. Moreover, as in all wheels which turn in a mill-course, a part of the motive water escapes, without exerting any useful action. So that the real effect will no longer be $P\, h_1$; it will be but a portion of it.

M. Poncelet has also determined the amount of this portion, that is to say, the ratio between the effect really produced, and the force employed to produce it; he has deduced it from many series of experiments.

He first made use of a small model of a wheel, having a diameter of $1\cdot 64$ ft., and of the form

indicated in Fig. 2929; and he made thirteen series of observations analogous to those made by Smeaton upon a wheel with plane floats, p. 1515. We give in the following Table what relates to the determination of the *maximum* effect in eight of these series.

Height			Water Expended per Second.	Weight Raised and Resistances.	Velocity of Wheel.	Ratios.		
Of Opening of Gate.	Of Total Fall. H	Due to Velocity V. h'	P	p	v	$\frac{v}{V}$	$\frac{pv}{Ph_1}$	$\frac{pv}{PH}$
feet.	feet.	feet.	lbs.	lbs.	feet.			
·0328	·456	·298	2·073	·183	2·165	0·50	0·65	0·42
	·797	·548	2·823	·376	3·477	0·59	0·63	0·44
·0656	·357	·256	3·572	·346	2·001	0·49	0·75	0·54
	·521	·397	4·366	·503	2·296	0·46	0·67	0·51
	·797	·633	5·844	·635	3·540	0·56 ?	0·61	0·49
·0984	·357	·239	5·315	·635	1·935	0·49	0·76	0·51
	·521	·381	6·550	·796	2·329	0·47	0·74	0·54
	·797	·617	8·580	1·168	3·248	0·52	0·72	0·56

M. Poncelet also operated, on a larger scale, upon a wheel 11·745 ft. in diameter, comprising, between two circular plates like those of bucket-wheels, thirty floats 1·246 ft. high in the direction of radius and 2·493 ft. wide. We give below the result of seven observations, remarking, 1st, that it was admitted, after some preliminary experiments, that the velocity V of the fluid on its arrival at the wheel was in the mean equal to the velocity due to the head h, and consequently that $h_1 = h$; 2nd, that p' represents solely the weight really raised by the friction brake, by means of which the experiments were made; thus $p'v$ is only the usual effect; while, in the preceding Table, p including the passive resistances pv was the dynamical effect.

2929.

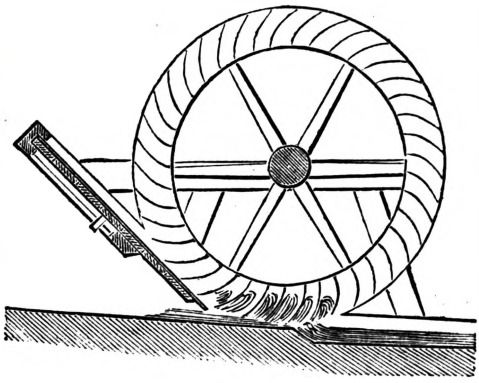

It will be observed, in these two Tables, that the small openings of the gate rendered an effect much less than the others.

From these experiments and observations, M. Poncelet concludes,

1st. That the velocity of the wheel which gives the *maximum* of effect is 0·55 of the velocity of the current. It may, however, vary from 0·50 to 0·60 without notable disadvantage.

2nd. That the dynamic effect is not below 0·75 P h for small falls with great openings of the gate, nor below 0·65 for small openings and great falls.

3rd. That this same effect, compared to the entire force of the motor, or P H, will be 0·60 of it, and it may descend to 0·50 in very small openings.

Opening of the Gate.	H	h	P	p'		$\frac{v}{V}$	$\frac{p'v}{Ph}$	$\frac{p'v}{PH}$
feet.	feet.	feet.	lbs	lbs.	feet.			
·328	5·216	4·691	615 3	183	8·00	0·46	0·51	0·46
·688	4·002	2·657	974 8	264	6·79	0·52	0·70	0·56
·722	4·168	3·444	1160	302	8·92	0·60	0·68	0·56
·656	4·986	4·297	1182	352	8·63	0·52	0·60	0·52
·997	2·657	1·804	1157	227	7·41	0·69	0·81	0·55
	3·969	3·117	1438	383	8·63	0·61	0·74	0·55
	4·986	4·143	1784	476	9·61	0·59	0·63	0·52

For the cases usually presented in practice, and for wheels well arranged, with velocities which do not differ considerably from 0·55 of that of the current, we shall admit, having regard to the passive resistances E = 0·75 P h and E = 0·60 P H.

We have seen (p. 1515) that, for wheels with plane floats, the numerical coefficients of these two expressions of the dynamic effect were but 0·32 and 0·25; so that the effect of wheels with curved floats is more than double that of wheels with plane floats. This conclusion, to which we have arrived in such a manner as to combine the experiments which have been made on both, would lead us, in good constructions, to avoid entirely wheels with plane floats, and to use instead those with curved floats.

We refer here to the Memoirs of M. Poncelet, for the rules to be followed in the establishment of wheels with curved floats, and we make here only a few observations upon their characteristic part, the floats.

1st. Their number should be double that which we have indicated for wheels with plane floats (p 1513).

Their height in the direction of the radius, or the distance between the exterior and interior

circumference of the wheel, should always be more than a fourth of the effective fall; we should give it a third in falls of 4·593 ft.; and one-half in those which are below this.

3rd. The inferior element of the curve, which we have seen to make no angle, or nearly none, with the exterior circumference, when the sheet of motive water was extremely thin, will make one of 24°, 30°, and, generally, greater according as the sheet is thicker. We give this element its proper direction, and to the floats the curve which they should have, by means of the following draft; from the point A, Fig. 2930, where the surface of the current B A meets the exterior circumference, raise the perpendicular A K, and from the point C, where it intersects the interior circumference, with C A for radius, describe the arc A E; it will fix the form of the floats. They should be made of narrow planks, united like the staves of a cask, or of single large planks curved by fire, or of strong iron plates.

2930.

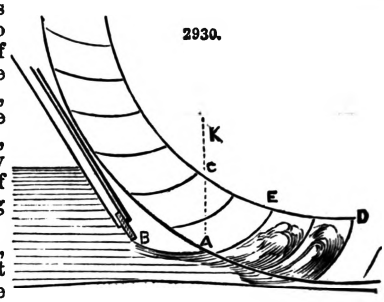

4th. A little beyond the vertical diameter of the wheel, we lower by a sudden step the floor of the tail-race, so that the water may experience no obstacle in issuing from the floats; otherwise, the effect would be subjected to a considerable diminution. Thus, M. Poncelet, who, in the last experiment of the preceding Table, had $p' v = 0{\cdot}63\,P\,h$, with a step of 0·984 ft., had but $0{\cdot}54\,P\,h$, the step being 0·262 ft.

In a place where the current presents a fall of 5·249 ft., we wish to establish a mill for sawing timber, which is to saw 129·168 sq. ft. per hour; that is, to make a cut 3·2809 ft. wide and 39·371 ft. in length. The wheel, or prime mover, is to have curved floats, and it is required to indicate its dimensions, as well as the quantity of water necessary to put and keep the mill in action. We know that a saw moved by a force equivalent to a horse-power, will saw, as a mean, 53·820 sq. ft. of timber in an hour; or, more generally, that the sawing of 10·764 sq. ft. is equal to a useful effect of from 325615 to 434154 lbs. ft., according to the quality of the timber to be sawed. Let us adopt, to prevent misconception, the last of these two numbers: the 129·168 sq. ft. to be sawn in an hour, or 3600″, will be equivalent to a useful effect of 1447·1 lbs. ft. a second. The resistances of the carriage, and of other parts of the machinery, will absorb nearly an equal quantity of action: so that the dynamic effect to be produced will be 2894·3 lbs. ft. (= E). Upon a fall of 5·249 ft., we will take 0·4921 ft. for dispositions relating to the mill-course, and 0·3937 ft. for half the opening of the gate; there will remain, then, for the head, but 4·3632 ft. (= h). With these numerical values of E and h, the formula $E = 0\ 75\,P\,h$ gives P = 884·7 lbs. By the formula $E = 0{\cdot}60\,P\,H$, we have 1105·8 lbs. We will adopt this last value, and, making a small increase, we will count upon a consumption of 15·892 cub. ft. The head being 4·3632 ft., the velocity due to it will be 16·758. For, ·95 of this or for the velocity of the fluid in the course upon its arrival at the wheel, we shall have 15·92 ft.; the wheel will take nearly ·55 of this: thus the velocity at its periphery will be 8·756 ft. It corresponds to the mechanism adopted, to have the wheels make eight turns per minute. Consequently, we give it a diameter of 21·3258 ft.; the floats, in number sixty-eight, will be 1·968 ft. deep, in the direction of the radius, and their breadth between the shroudings 2·296 ft. It may be observed, in relation to this last dimension, that the thickness of the sheet of water in the course having to be nearly 0·5249 ft., it would be proper to give it a width above the wheel of 1·9027 ft. $\left(= \frac{15{\cdot}892}{15{\cdot}912 \times {\cdot}5249}\right)$. See Barker's Mill. Barrage. Boiler, p. 423. Canal. Damming. Hydraulics. Overshot Water-wheels. Poncelet's Water-wheel. Turbine Water-wheels. Undershot Water-wheels.

FLOORING. Fr., *Parquet, Carrelage, Tablier;* Ger., *Fussboden;* Ital., *Pavimento;* Span., *Piso.*

Floor (Moreland's), Fig. 2931.—Richard Moreland and Son's method of constructing flooring consists in fixing wrought-iron girders at given distances apart on the walls of buildings, and then placing between them on their lower flanges a number of wrought-iron bow and string lattice girders; and on the upper or curved surface of these laying corrugated iron throughout the floor. Concrete is then laid on the corrugated iron to the desired form and thickness, and sleepers, joists, and floor-boards may then be laid on the concrete in the ordinary manner. The ceiling joists are notched, or otherwise fixed on the lower part of the lattice girder, and are lathed and plastered in the usual way.

2931.

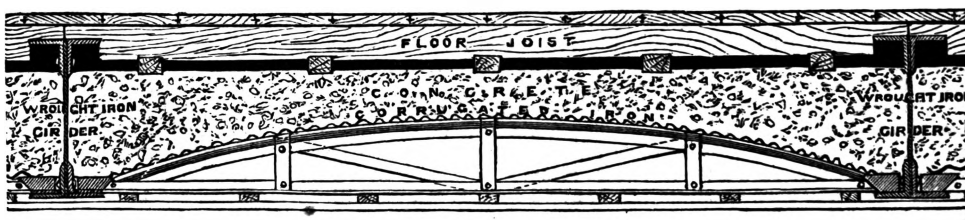

Long as well as short spans may be constructed on this system without the intervention of main girders, as the wrought-iron girders are made of great depth; they are kept close to both floor-boards and ceiling, thereby ensuring great rigidity and strength with little material. The angle-irons employed in constructing this floor being invariably used in one length throughout, and the rivets securing them to the web being closed by a powerful riveting machine, the girders are thus made very rigid, so that they deflect but little when loaded.

The air-space, which is included between the under-side of the corrugated iron and the ceiling, being a non-conductor of sound and also of heat, renders the floor sound-proof and safe under the action of fire, either from above or below the flooring. This air-space may be used for ventilating rooms by having suitable apertures provided in the ceiling to connect this space to special flues enclosed in the walls of the building. The air-space may also be used for warming purposes, provided the ceiling is specially constructed for this purpose.

The concrete laid on the corrugated iron forms a natural arch, and is prevented from exercising much lateral thrust by reason of the bow and string lattice girders with the corrugated iron acting as a permanent centring to the arch.

FLUE. Fr., *Carneaux, Tuyau de cheminée;* Ger., *Feuerzug, Rauchzug;* Ital., *Condotto dal fumo;* Span., *Conducto de humo.*

A *flue* is an air-passage; especially one for conveying smoke and flame from a fire. A flue is also a vertical division or compartment of a chimney. A steam-boiler flue is a passage surrounded by water, for the gaseous products of combustion, in distinction from *tubes* which hold water, and are surrounded by fire. Small *flues* are called *flue-tubes.* See Boiler. Chimney. Ventilation.

FLUME. Fr., *Biez, Canal d'écluse;* Ger., *Muhlengerinne;* Ital., *Gora;* Span., *Saetin.*

A stream; especially a passage or channel for the water that drives a mill-wheel; or an artificial channel of water for gold washing. See Overshot Water-wheels. Turbine Water-wheels.

FLY-WHEEL. Fr., *Volant;* Ger., *Schwungrad;* Ital., *Volanda;* Span., *Volante.*

See Algebraic Signs. Angular Motion. Engines, *Varieties of.*

FOLDING AND MEASURING MACHINE. Fr., *Machine à plier;* Ger., *Falzmaschine;* Ital., *Macchina da piegare e misurar panno;* Span., *Máquina de plegar y medir.*

See Measuring and Folding.

FORCE. Fr., *Force;* Ger., *Kraft;* Ital., *Forza;* Span., *Fuerza.*

See Acceleration. Anemometer. Angular Motion. Dynamometer. Dynamometer Car. Gunnery.

FORGE. Fr., *Forge;* Ger., *Esse;* Ital., *Fucina;* Span., *Fragua.*

A forge is an establishment where iron or other metals are wrought by heating and hammering: a *smithy*, a shop with its furnace, where iron and steel are heated and wrought; also, the place where iron is rendered malleable by *puddling* and *shingling*, is termed a forge.

Fig. 2932 gives the arrangement of a fan-forge employed at Gwynne and Co.'s Works, Essex Street, Strand.

This forge, Fig. 2932, is entirely constructed of iron.

2932.

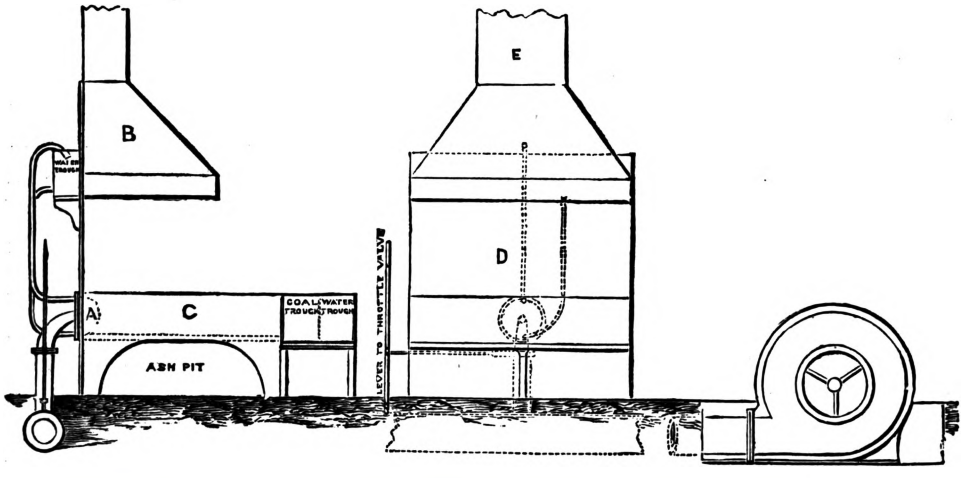

C represents the hearth, in one casting, with the coal, shown on the right-hand side, so as to be within easy reach of the smith.

B is the bonnett, made of stout sheet iron, which connects immediately to the chimney E.

F represents one of Gwynne's improved fan-blowers, which is driven at about 1200 revolutions per minute, and sends the blast through the stand-pipe G, in which is the regulating valve; on the end of this pipe is the tuyere-iron A, which is fed by cold water from the small tank H, which is connected by the pipes, as shown, and which keeps up a continual circulation. The cold water enables the nose of the tuyere to last considerably longer than if not used.

For forging small round short rods, or keys, no tools are required except the ordinary fire-irons and the hand-hammer, tongs, and anvil-chisel, in the anvil, shown by Figs. 2933 to 2935.

The pin should be forged to the proper diameter, and also the ragged piece cut off the small end, by means of the anvil-chisel, shown by Fig. 2935, while the work is still attached to the rod of steel from which it is made. After having cut and rounded the small end, it is proper to cut the key from the rod of steel, allowing a short piece to be drawn down to make the holder, by which to hold it in the lathe. This holder is drawn down by the fuller, and afterwards by the hammer. The fuller is first applied to the spot that marks the required length of key; the fuller is then driven in by the hammerman to the required diameter of the holder, the bottom fuller

being in the square hole of the anvil during the hammering process, and the work between the top and bottom fullers. During the hammering, the forger rotates the key, in order to make the gap of equal or uniform depth; the lump which remains is then drawn down by the hammers, or by the hand-hammer only, if a small pin is being made. If the pin is very small, it is more conveni nt to draw down the small lump by means of the set-hammer and the hammerman. The set-hammer is shown in Fig. 2939; and the top and bottom fullers by Fig. 2940

2933.

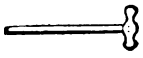

2934.

2935.

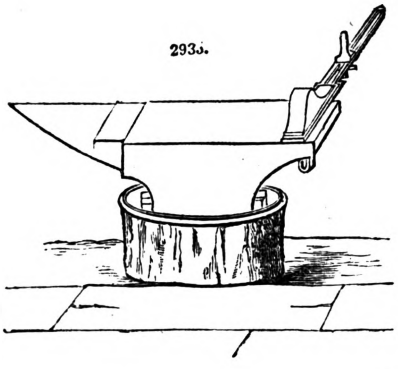

2936.

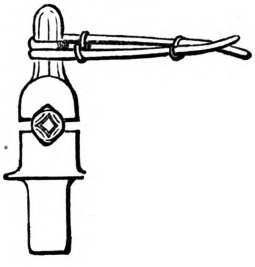

2937.

2938.

2939.

2940.

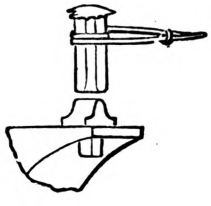

The double or alternate hammering by forger and hammerman should at first be gently done, to avoid danger to the arm through not holding the work level on the anvil. The hammerman should first begin, and strike at the rate of one blow a second; after a few blows the smith begins, and both hammer the work at times, and other times the anvil.

Figs. 2936, 2937, show the top and bottom rounding-tools, for rounding large keys. Large keys may be made without rounding-tools by rounding the work with a hand-hammer, and cutting off the pin by the anvil-chisel, instead of the rod-chisel, Fig. 2938. The rod-chisel is so named because the handle by which the chisel is held is an ash rod or stick, see Fig. 2936. A rod-chisel is thin for cutting hot iron, and thick for cutting cold iron. Fig. 2935 represents the anvil-chisel in the square hole of the anvil. By placing the steel while at a yellow heat upon the edge of the chisel, a small key can be easily cut off by a few blows of a hammer upon the top of the work.

To forge a key with a head involves more labour than making a straight one. There are three principal modes of proceeding, which include drawing down with the fuller and hammer; upsetting one end of the iron or steel; and doubling one end of a bar to form the head.

For proceeding by drawing down, a rod or bar of steel is required, whose diameter is equal to the thickness of the head required; consequently, large keys should not be made by drawing down unless steam-hammers can be used. Small keys should be drawn to size while attached to the bar from which they are made; the drawing is commenced by the fuller and set-hammer. Instead of placing the work upon the bottom fuller in the anvil, as shown for forging a key without a head, the steel is placed upon the face of the anvil, and the top fuller only is used, if the key required is large enough to need much hammering; but a very small key can be drawn down by dispensing with the top fuller and placing the bottom fuller in the hole, and placing the work upon the top, and then striking on one side only, instead of rotating the bar or rod by the hand. By holding the bar or rod in one position, the head is formed upon the under-side of the bar; and by turning the work upside down, and drawing down the lump, the stem is produced.

The upsetting of iron generally should be done at the welding heat, the upsetting of steel, at the yellow heat, except in some kinds of good steel, that will allow the welding heat. And both iron and steel require cooling at the extremity, to prevent the hammer spreading the end without upsetting the portion next to it. If the head of the key is to be large, several heats and coolings must take place, which renders the process only applicable to small work. A small bar can be easily upset by heating to a white heat or welding heat, and cooling a quarter of an inch of the end; then immediately put the bar to the ground with the hot portion upwards, the bar leaning against the anvil, and held by the tongs (Fig. 2941). The end is then upset, and the extremity cooled again after being heated for another upsetting, and so on until the required diameter is attained. When a number of bars are to be upset in this manner, it is necessary to provide an

iron box, into which to place the ends of the bars, instead of upon the soft ground or wood flooring, injury to the floor being thereby prevented.

When the key-head is sufficiently upset, the fuller and set-hammer are necessary to make a proper shoulder; the stem is then drawn four-sided and rounded by the ◇ top and bottom tools. If the bar from which the key is being made is not large enough to allow being made four-sided, eight sides should be formed, which will tend to close the grain and make a good key.

2941.

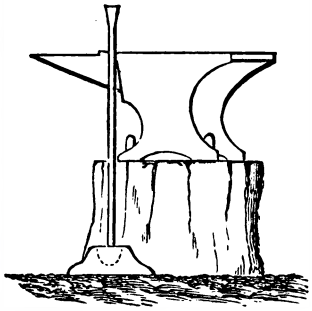

2942.

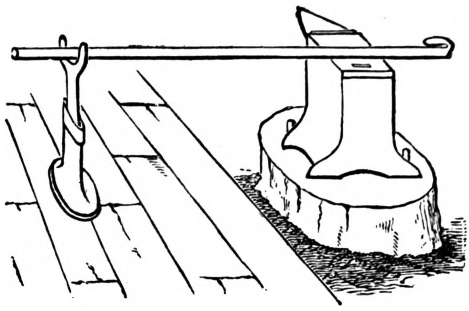

The third method of making keys with heads is the quickest of the three, particularly for making keys by the steam-hammer. By its powerful aid we are able to use a bar of iron an inch larger than the required stem, because it is necessary to have sufficient metal in order to allow hammering enough to make it close and hard, and also welding, if seamy. If the bar from which it is to be made is too large to be easily handled without the crane, the piece is cut from the bar at the first heat. But if the bar is small, it can be held up at any required height by the prop, shown in Fig. 2942. While thus supported, the piece to be doubled to make the head is cut three-quarters of the distance through the iron, at a proper distance from the extremity. The piece is then bent in the direction tending to break it off: the uncut portion being of sufficient thickness to prevent it breaking, will allow the two to be placed together and welded in that relation. A hole may also be punched through the two, while at a welding heat, as shown by Fig. 2943. The hole admits a pin or rivet of iron, which is driven into the opening, and the three welded together. This plan is resorted to for producing a strong head to the key without much welding; but for ordinary purposes it is much safer to weld the iron when doubled, without any rivet, if a sufficient number of heavy blows can be administered. At the time the head is welded, the shoulder should be tolerably squared by the set-hammer; and the part next to the shoulder is then fullered to about three-quarters of the distance to the diameter of stem required. In large work the fuller used for this purpose should be broad, as in Fig. 2944. After the head is welded, and the portion next to it drawn down by the fuller, the piece of work is cut from the bar or rod, and the head is fixed in a pair of tongs similar to Fig. 2945. Such tongs are useful for very small work, and are

2943.

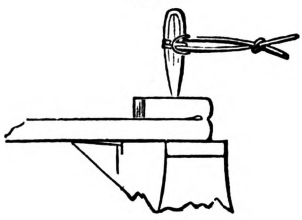

2944.

2945.

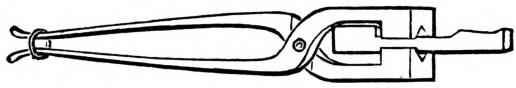

made of large size for heavy work. Tongs of this character are suited to both angular and circular work. They will grip either the head or the stem, as shown in the figure. While held by the tongs the thick lump of the stem that remains is welded, if necessary. Next draw the stem to its proper shape, and trim the head to whatever shape is required.

Bolts.—Bolts are made in such immense numbers, that a variety of machinery exists for producing small bolts by compression of the iron while hot into dies. But the machinery is not yet adapted to forge good bolts of large size, such as are daily required for general engine-making. Good bolts of large diameters can now be made by steam-hammers at a quick rate; and small bolts of good quality are made in an economical and expeditious manner by means of instruments named bolt-headers. There is a variety of these tools in use, and some are valuable to small manufacturers because of being easily made, and incurring but little expense. The use of a bolt-header consists in upsetting a portion of a straight piece of iron to form the bolt-head, instead of drawing down or reducing a larger piece to form the bolt-stem, which is a much longer process; consequently, the bolt-header is valuable in proportion to its capability of upsetting bolt-heads of various sizes for bolts of different diameters and lengths.

The simplest kind of heading-tool is held upon the anvil by the left hand of the smith, while the piece to be formed into a head is hammered into a recess in the tool, the shape of the intended

head. Three or four recesses may be drilled into the same tool, to admit three or four sizes of bolt-heads. Such a tool is represented by Fig. 2947, and is made either entirely of steel, or with a steel face, in which are bored the recesses of different shapes and sizes.

2946. 2947. 2948.

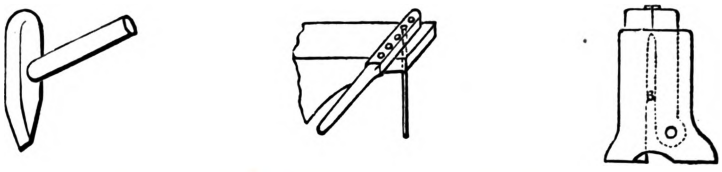

The pieces of iron to be formed into bolts are named bolt-pieces. When these pieces are of small diameter or thickness, they are cut to a proper length while cold by means of a concave anvil-chisel and stop, or by a large shearing machine. One end of each piece is then slightly tapered while cold by the hand-hammer, Fig. 2933, or a top-tool. This short bevel or taper portion allows the bolt to be driven in and out of the heading-tool several times without making sufficient ragged edge to stop the bolt in the hole while being driven out. Those ends that are not bevelled are then heated to about welding heat, and upset upon the anvil or upon a cast-iron block, on, or level with, the ground. This upsetting is continued until the smaller parts or stems will remain at a proper distance through the tool; after which, each head is shaped by being hammered into the recess. During the shaping process, the stem of the bolt protrudes through the square hole in the anvil, as indicated by Fig. 2947.

But when a large number of small bolts are required in a short time, a larger kind of heading-tool is made use of, which is named bolt-header. One of these, Fig. 2948, is a jointed bolt-header. The actual height of these headers depends upon the length of bolts to be made, because the pieces of which the bolts are formed are cut of a suitable length to make the bolts the proper length after the heads are upset; consequently, bolt-headers are made 2 or 3 ft. in height, that they may be generally useful.

The header represented by Fig. 2948 contains a movable block B, upon which rests one end of a bolt-piece to be upset; it is therefore necessary to raise or lower the block to suit various lengths of bolts.

All bolts, large and small, that are to be turned in a lathe require the two extremities to be at right angles to the length of the bolt, to avoid waste of time in centring previous to the turning process; and connecting-rod bolts and main-shaft bolts require softening, which makes them less liable to break in a sudden manner; and it is important to remember that hammering a bolt while cold will make it brittle and unsafe, although the bolt may contain more iron than would be sufficient if the bolt were soft. Great solidity in a bolt is only necessary in that portion of it which is to be formed into a screw. The bolt is less liable to break if all the other parts are fibrous, and the lengths of the fibres are parallel to the bolt's length. But in the screw, more solidity is necessary, to prevent breaking off while the bolt is being screwed, or while in use. However good the iron may be, the bolt is useless if the screw is unsound; and it is well to apply a pair of angular-gap tools, Fig. 2964, to the bolt-end while at welding heat.

Bolts of all kinds, large and small, are injured by the iron being overheated, which makes it rotten and hard, and renders it necessary to cut off the burnt portion, if the bolt is large enough; if not, a new one should be made in place of the burnt one.

Long bolts that require the lathe process are carefully straightened. This is conveniently effected by means of a strong lathe, which is placed in the smithy for the purpose. Long bolts are also straightened in the smithy by means of a long straight-edge, which is applied to the bolt-stem to indicate the hollow or concave side of the stem. This concave side is that which is placed next to the anvil-top, and the upper side of the bolt is then driven down by applying a curved top-tool and striking with a sledge-hammer. This mode is only available with bolts not exceeding 2 or 3 in. diameter and of length convenient for the anvil, because in some cases bolts require straightening or rectifying in two or more places along the stems. If a bolt 6 ft. in length is bent 1 ft. from one end, the bent portion is placed upon an anvil, while the longer portion is supported by a crane, and a top-tool is applied to the convex part. The raising of the bolt-end to any required height is effected by rotating a screw which raises a pulley, upon which is an endless chain; the work being supported by the chain, both chain and work are raised at one time. It is necessary to adjust the work to the proper height while being straightened; if not, the hammering will produce but little good effect. The amount of straightening necessary depends upon the diameters to which the bolts are forged, and also upon their near approach to parallelism. A small bolt not exceeding 1½ in. in diameter need not be forged more than a tenth of an inch larger than the finished diameter; a bolt about 2 in. diameter, only an eighth larger; and for bolts 4 or 5 in. in diameter and 4 or 5 ft. in length, a quarter of an inch for turning is sufficient, if the bolts are properly straightened and in tolerable shape. This straightening and shaping of an ordinary bolt is easily accomplished while hot, by the method just mentioned; other straightening processes, for work of more complicated character, will be given as we proceed.

After the bolts are made sufficiently straight by a top-tool, the softening is effected by a treatment similar to that adopted for softening steel, which consists in heating the bolts to redness and burying them in coke or cinders till cold. A little care is necessary while heating the bolts to prevent them being bent by the blast. To avoid this result, the blast is gently administered and the bolt frequently rotated and moved about in the fire.

Nuts.—The simplest method of making small nuts is by punching with a small punch that is held in the left hand; this punch is driven through a bar near one end of it, which is placed upon

a bolster on the anvil, while the other end of the bar is supported by a screw-prop. This mode is adapted to a small maker whose means may be very limited. By supporting the bar or nuts in this manner, it is possible for a smith to work without a hammerman. A bar of soft iron is provided, and the quantity of iron that is required for each nut is marked along the bar by means of a pencil, and a chisel is driven into the bar at the pencil-marks while the bar is cold. A punch is then driven through while the iron is at a white heat. Each nut is then cut from the bar by an anvil-chisel, and afterwards finished separately while on a nut-mandrel. The bar on the bolster is shown by Fig. 2952.

A more economical method is by punching with a rod-punch, which is driven through by a sledge-hammer. By this means several nuts are punched at one heating of the bar, and also cut from the bar at the same heat. A good durable nut is that in which the hole is made at right angles to the layers or plates of which the nut is composed. Some kinds of good nut iron are condemned because of these plates, which separate when a punch is driven between them instead of through them. By punching through the plates at right angles to the faces of the intended nuts, the iron is not opened or separated, and scarfing is avoided. Nuts that have a scarf-end in the hole require boring, that the hole may be rendered fit for screwing; but nuts that are properly punched may be finished upon a nut-mandrel to a suitable diameter for the screw required. Nuts for bolts not exceeding 2½ or 3 in. diameter can be forged with the openings or holes of proper diameter for screwing by a tap. The precise diameter is necessary in such cases, and is attained by the smith finishing each nut upon a nut-mandrel of steel, which is carefully turned to its shape and diameter by a lathe. The mandrel is taper and curved at the end, to allow the nut to fall easily from the mandrel while being driven off. Such nut-mandrels become smaller by use, and it is well to keep a standard gauge of some kind by which to measure the nuts after being forged. The best kind of nut-mandrel is made of one piece of steel, instead of welding a collar of steel to a bar of iron, which is sometimes done.

One punch and one nut-mandrel are sufficient for nuts of small dimensions, but large ones require drifting after being punched and previous to being placed upon a nut-mandrel. The drifting is continued until the hole is of the same diameter as the mandrel upon which the nut is to be finished. The nut is then placed on, and the hole is adjusted to the mandrel without driving the mandrel into the nut, which would involve a small amount of wear and tear that may be avoided. A good steel nut-mandrel, with careful usage, will continue serviceable, without repair, for several thousands of nuts.

The holes of all nuts require to be at right angles to the two sides named faces; one of these faces is brought into contact and bears upon the work while the nut is being fixed; consequently, it is necessary to devote considerable attention to the forging, that the turning and shaping processes may be as much as possible facilitated. If the two faces of the nut are tolerably near to a right angle with the hole, and the other sides of the nut parallel to the hole, the nut may be forged much nearer to the finished dimensions than if it were roughly made or malformed.

To rectify a nut whose faces are not perpendicular to the opening, the two prominent corners or angles are placed upon an anvil to receive the hammer, as indicated in Fig. 2953. By placing a nut while at a yellow heat in this position, the two corners are changed to two flats, and the faces become at the same time perpendicular to the opening; the nut is then reduced to the dimensions desired. If the nut is too long, and the sides of it are parallel to the opening, the better plan is to cut the prominences from the two faces by means of a trimming chisel, Fig. 2946, instead of rectifying the nut by hammering. Cutting off scrap-pieces while hot with a properly-shaped chisel of this kind, is a much quicker process than cutting off in a lathe.

Small connecting-bolts, not more than 2 or 3 in. in diameter, are made in an economical manner by drawing down the stems by a steam-hammer. Those who have not a steam-hammer will find it convenient to make a collar to be welded on a stem, in order to form a head, as shown by Fig. 2949. After being welded the head may be made circular or hexagonal, as required. The tool for shaping hexagonal heads is indicated by Fig. 2951. Such an apparatus may be adapted to a number of different sizes by fixing the sliding part of the tool at any required place along the top of the block, in order to shape heads of several different diameters. The movable or sliding block is denoted in the figure by S.

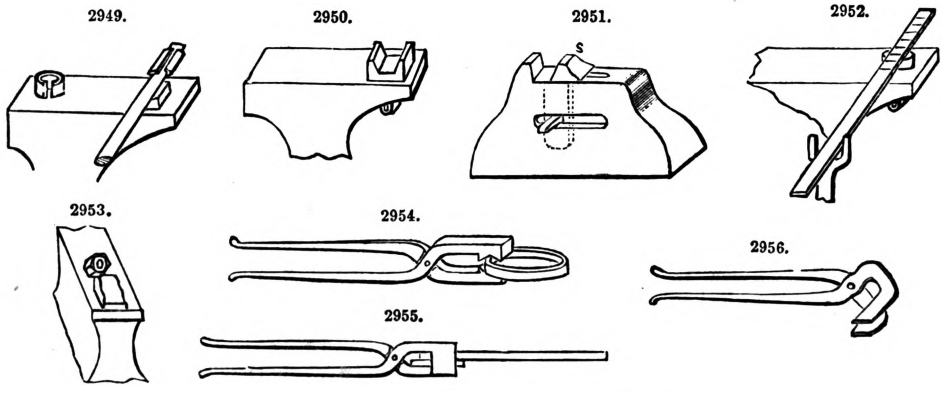

Tongs.—Fig. 2954 shows a curved-gap tongs, Fig. 2955 a bar-tongs, and Fig. 2956 a side-grip tongs.

The portable forge, Figs. 2957, 2958, contrived by Schaller, of Vienna, is well suited for military service. It consists of a box made of thin iron plates, 19 in. square and 9 in. high when closed, as shown in Fig. 2957. Within this box the bellows, legs, and all the tools, shown in Fig. 2958, are enclosed, and can be transported in a very convenient manner. The unpacking and setting up of

2958.

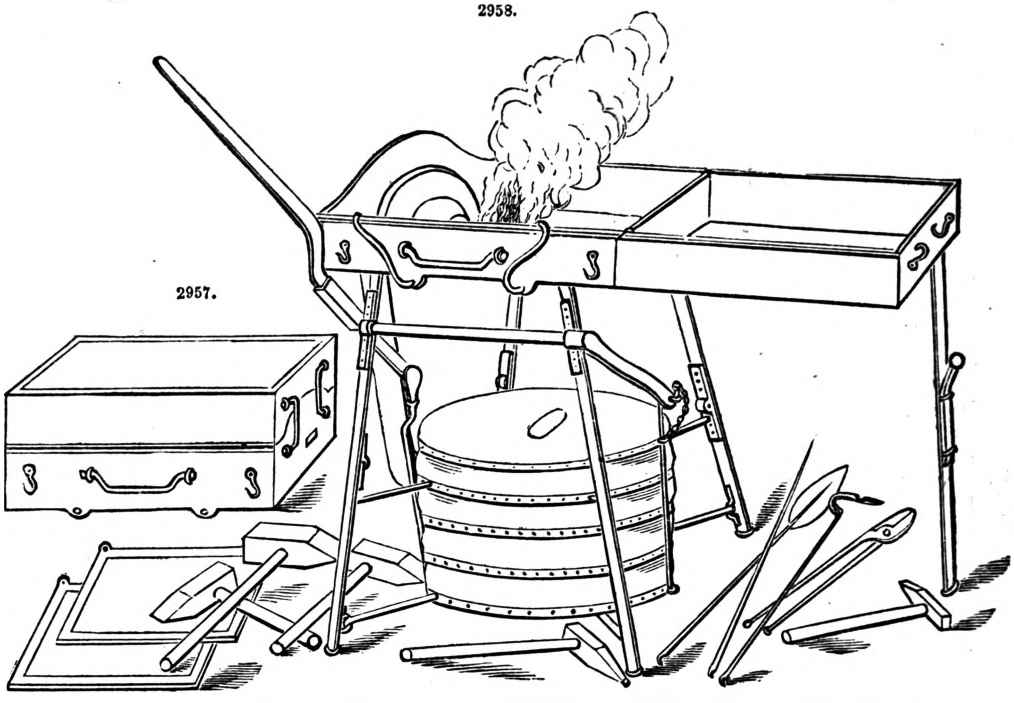

2957.

this forge when wanted can be effected in a few minutes, as all the parts are well made and fit together with firmness and accuracy, and there is no complexity in the arrangement. Schaller has delivered upwards of 200 of these forges to the Austrian army. This forge has been much employed in France and Belgium.

FORGING, MACHINERY FOR. FR., *Machines à forger;* GER., *Maschinen zum Schmieden;* ITAL., *Macchina da fucinare;* SPAN., *Maquinaria de forjar.*

Machinery for Heavy Forging.—William Clay, of Liverpool, has designed machinery, Figs. 2959 to 2964, well adapted to that class of forging known as heavy forging, the object sought being to ensure sound forgings, which it is very difficult to obtain when manufacturing bulky articles, the thickness of the metal in which greatly and suddenly varies. In manufacturing, for example, marine-engine shafts with disc-couplings, the point of junction of the disc with the shaft will generally be found when cut to exhibit internal fissures, which greatly detract from the strength of the shaft. In order to avoid this defect, and to ensure solidity throughout the metal of large forgings, W. Clay proposes, when forming heads, collars, or flanges upon the ends of shafts or rods, to employ a horizontal hammer of peculiar construction, which is connected with and operated by a piston working in a horizontal steam-cylinder, and thereby materially to reduce the sectional thickness of the metal at the line of junction of the head, collar, or flange with the shaft.

In the accompanying engraving, Fig. 2959 shows in side elevation the kind of steam-hammer which Clay employs in manufacturing heavy forgings; Fig. 2960 is a partial longitudinal section of the same; Fig. 2961 is a transverse section taken at the line 1 2 of Fig. 2960, and looking in the direction of the arrow; and Fig. 2962 is a transverse section taken in the same line, but looking in an opposite direction. A A is the bed of the machine formed in one casting. To one end of this bed the steam-cylinder B is bolted, and to the other is secured a block C for receiving on its face the anvil D. The face of this anvil is shaped to correspond to the form the end of the shaft is intended to receive by its lateral expansion; and in order to allow of the anvil being changed to suit different sizes or kinds of work, it is made to fit into V's formed on the face of the block C. The anvil is U-shaped, as shown at Fig. 2962, and the block has a corresponding vertical hollow to enable it to receive the heated shaft that is intended to be brought under the action of the hammer. To facilitate the turning of the shaft on the anvil the block C is fitted with antifriction rollers *c c c* which support the shaft when it is presented to the hammer. E is the piston of the cylinder B, fitted to a cylindrical trunk E′, which carries at its other end the hammer-block.

Fitted centrally in the face of this block is a conical piece G′, which forms the striking part of the hammer; its object is to form a cavity in the end of the shaft, and thus by reducing the thickness of the metal at that part to remove the liability of fissures occurring in the forging. H is the slide-valve, the rod *h* of which extends through the opposite ends of the valve-box. At its rear end this rod is formed into a link to receive a cam h_1, which is keyed to a cross-shaft h^2. This shaft rocks in bearings on the top of the cylinder B, and it is fitted with a handle, by raising or depressing which the attendant is enabled to operate the valve, and thus regulate the advance and retrograde movements of the hammer at pleasure.

To prevent the risk of damage to the machinery from inattention the valve-rod is jointed at its front end to the arm of a rock-shaft h^3 mounted in bracket bearings at the front of the cylinder B, and fitted with a pendent arm h^4 carrying an antifriction bowl. In a line with this bowl on the hammer-head is fitted an adjustable stop h^5, which as the piston is nearing its back-stroke will strike the bowl of the arm h^4 and rock the shaft h^3. This motion of the rock-shaft will, by reason of its connection with the valve-rod, cause the valve to advance and cut off the supply of steam to the cylinder, while at the same time it will stop the escape of the exhaust steam, and thus provide an elastic cushion for the piston to strike against.

2959.

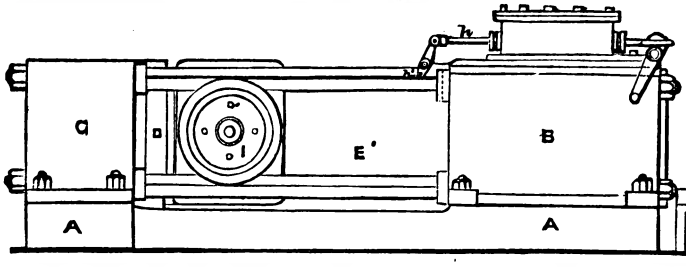

2962.

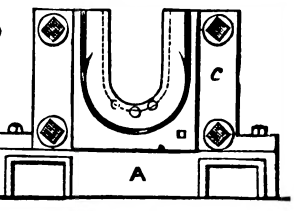

2960.

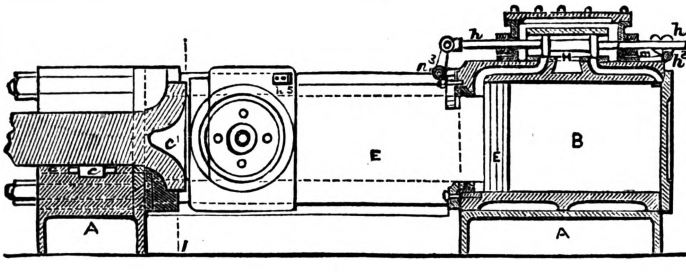

2961.

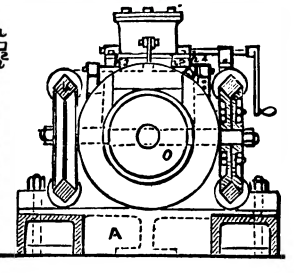

2963.

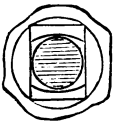

2964.

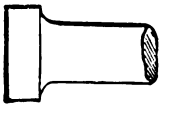

An incidental advantage derivable from making the cylindrical trunk E^1 of the large diameter indicated in the engraving is that it will allow of but a small amount of steam being used in the return stroke of the piston, while a powerful propelling force may be used for its advance. The hammer-head is fitted with a pair of V-grooved wheels I, which turn freely on a fixed axle that passes through the hammer-head. These wheels are intended to carry the weight and facilitate the traverse of the hammer, and for this purpose they run upon and between angular rails K K_1, which constitute also tie-rods for connecting the cylinder B and blocks C together, and enabling the machine the better to resist the strain to which it is subjected. The lower rails K serve as track-rails for the traverse to and fro of the hammer, and the upper rails K^1 assist in steadying the wheels on the track-rails.

In order to form a head or enlargement on a shaft by this machine, Clay first takes a shaft forged in any approved manner, and piles the end with pieces of wrought iron, after the manner indicated, Fig. 2963, so as to approximate roughly to the shape desired. The piled end of the shaft is next brought to a welding heat in a furnace and the pieces reduced to a solid mass in the usual way, whereby a shaft-head is obtained like that shown, Fig. 2964. Having thus prepared the shaft-forging, instead of finishing it in the ordinary way it is submitted to the action of the forging machine we have described, previously reheating the shaft, if that is required, to enable the machine to act efficiently upon it. The heated shaft is placed with its head opposite the hammer-head, as shown, Fig. 2960, in the block or rest C, furnished with antifriction rollers *c c* for facilitating the turning of the shaft when required. The head of the shaft overlies the anvil which forms the face of the block C, and the hammer by reason of its shape will, in delivering its blows, form a conical hollow in the head of the shaft, and thereby to a considerable extent reduce the bulk and equalize the thickness of the metal at the centre or the junction of the head with the shaft. By turning the shaft from time to time on its axis as the operation proceeds its head will be reduced under the blows of the hammer to a regular figure, requiring comparatively little turning to finish it. This mode of forging thick portions hollow also ensures a more equable contraction of the metal when cooling than hitherto, and the formation of fissures in large forgings of the character illustrated will be thereby avoided. To ensure the best practical effect the cooling of the metal, when the forging is completed, is commenced at the centre of the head by the application of a jet of water. By thus causing the metal to shrink towards the interior instead of the exterior the chief difficulty of obtaining sound forgings will be removed.

Figs. 2965 to 2971 are given to illustrate the method and machinery used for the manufacture of wrought-iron railway wheel centres by the stamping process of Arbel, at the Phœnix Iron-works, Rotherham.

Fig. 2965 is a front elevation of the steam-hammer, the weight of the moving parts of which is 12 tons. The standards are of Memel timber, and are four in number. The hammer-head is

2965.

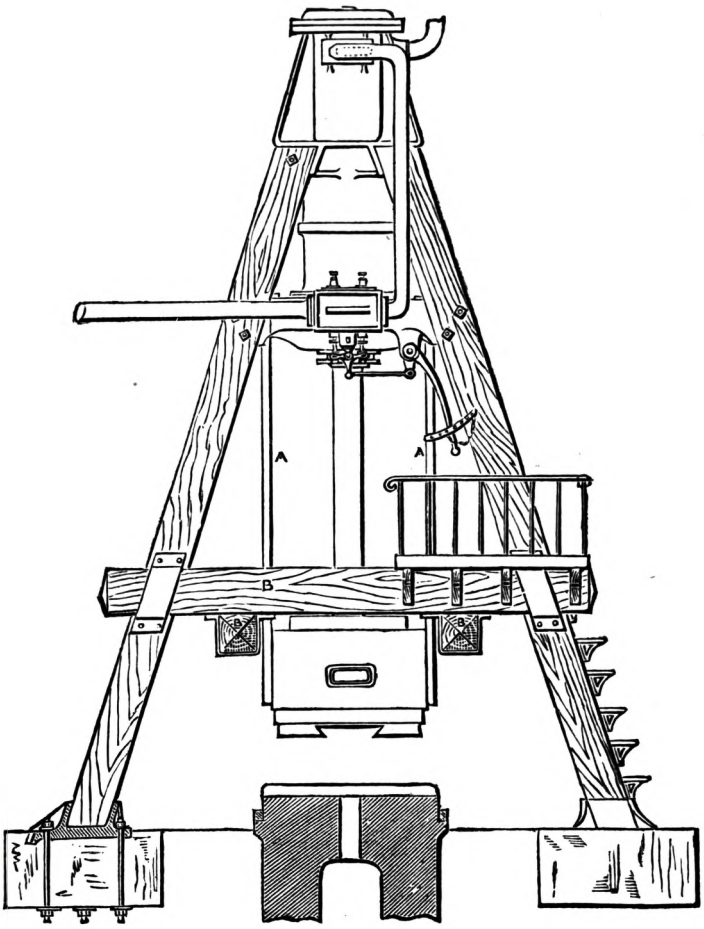

2968.

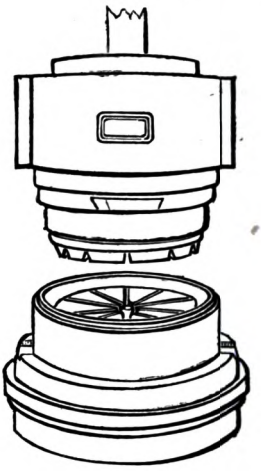

2969.

2970.

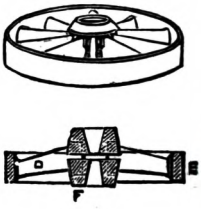

2966.

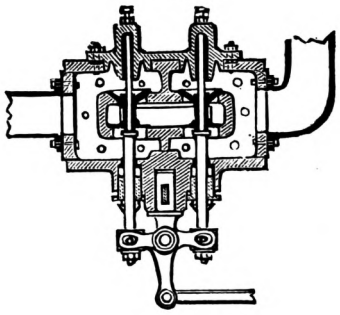

2967.

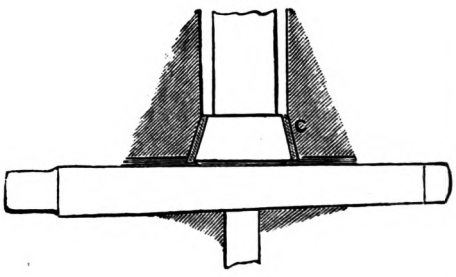

2971.

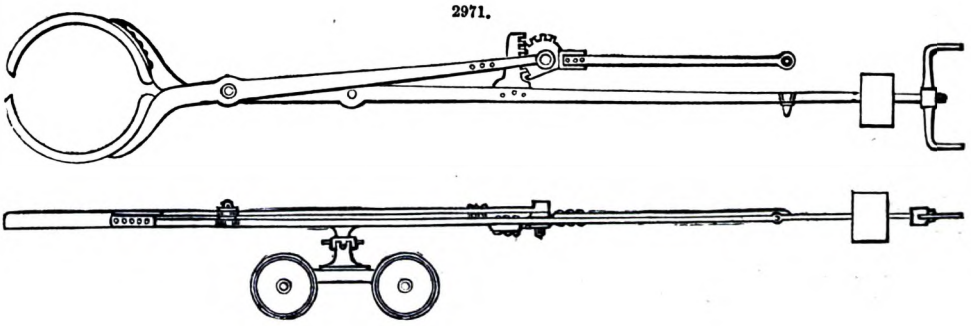

guided by four wrought-iron guide-bars, A A, the top ends of which are keyed into the cylinder base, and the lower ends bolted to the cross-timbers B B.

Fig. 2966 is a section of the valves.

The piston-rod is forged solid with the piston. Fig. 2967 shows the mode of connecting it with the hammer-head. The lower end of the rod is turned conically; and round it is placed the steel bush C, in two parts. The large wrought-iron key is drawn against the end of the rod, to tighten the rod into the hammer-head.

Fig. 2968 is a perspective view of the dies used, the top one being keyed into the hammer-head, and the bottom one keyed into the anvil.

Fig. 2969 is a perspective view of a wheel-centre when stamped, the rim, spokes, and nave being rounded so as to leave the dies.

Fig. 2970 shows the method of piling the material for a wheel-centre before being placed into the furnace. The spokes D are placed inside the rim E, with their inner ends enveloped between two nave washers F, the washers having indents stamped into them to receive the spokes.

Fig. 2971 shows the tongs used for lifting the material into an ordinary reverberatory furnace. When the material is raised to a welding heat it is again grasped by the tongs, and placed between the dies in the hammer, and welded with a few blows of the hammer into one solid piece. The tongs are supported on a carriage, which runs on rails from the furnace to the hammer.

See ANVIL. BELLOWS. FURNACE. HAND-TOOLS. IRON. PUDDLING. SHINGLING. STEAM-HAMMER. TIN. WELDING.

FORTIFICATION. FR., *Fortification*; GER., *Befestigungs oder Festungswerk*; ITAL., *Fortificazione*; SPAN., *Fortificacion*.

Abattis, see p. 4.

Banquette.—A little raised way or foot-bank running along the inside of a parapet, on which the musketeers stand to fire upon the enemy in the ditch or in front of it.

2972.

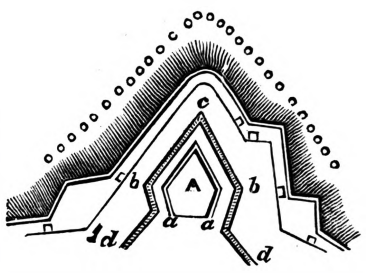

Barbette.—A mound of earth, on which guns are mounted to fire over the top of the parapet.

Bastion.—A part of the main enclosure which projects towards the exterior, consisting of the faces and flanks. Two adjacent bastions are connected by the *curtain*, which joins the flank of one with the adjacent flank of the other. The distance between the flanks of a bastion is called the gorge. In Fig. 2972, A is the bastion; *a*, curtain angle; *b*, shoulder angle; *c*, salient angle; *a*, *a*, gorge; *a*, *b*, flank; *a*, *d*, curtain; *b*, *c*, face.

Berme.—A narrow space, two, three, or more feet wide, left at the foot of the exterior slope of the parapet to retain earth that may slide down the bank.

Blockhouse.—An edifice or structure of heavy timber or logs for military defence, having its sides loop-holed for musketry. The sides and ends are sometimes much like a stockade, and the top covered with earth, as in Fig. 2973; there may also be a ditch round it.

2973.

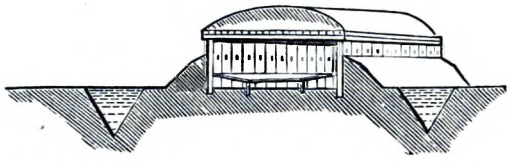

Bonnet.—A part of a parapet considerably elevated to screen the other part and its *terre-plein*, usually from an enfilade fire.

Boyau.—A small trench, or branch of a trench, leading to a magazine or any particular point. They are generally called *boyaus of communication*.

Breastwork.—A low parapet for defence.

Bridge-head.—A fortification covering the extremity of a bridge nearest the enemy.

Brisure.—Any part of a rampart or parapet which deviates from the general direction.

Caponnière.—A work placed in a ditch for its defence by fire-arms, the defenders being covered on the sides and sometimes overhead. If on the side only, it is single; if overhead, it is double. The work often serves as a covered passage-way across the ditch.

Casemate.—A bomb-proof chamber, in which cannon may be placed to be fired through embrasures; or capable of being used as a magazine, or for quartering troops. A, D, Fig. 2974, is a section through a casemate; a gun at B would fire through the embrasure in the wall; a gun at C would fire *en barbette*, or over the parapet. D is the *parapet*; E the scarp wall, the outer face of which is the *scarp*. *a b*, *terre-plein*.

2974.

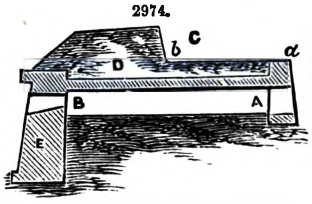

Chevaux-de-frise.—Pieces of timber traversed with wooden spikes, pointed with iron, 5 or 6 ft. long, used to defend a passage, stop a breach, or make a retrenchment to stop cavalry.

Counterfort.—A buttress, spur, or pillar, serving to support a wall or terrace.

Counter-mine.—A gallery underground, so constructed as to facilitate the formation of mines by which those of the enemy may be reached and destroyed.

Counterscarp.—The exterior slope of the ditch.

Covered way.—A secure road of communication all round a fort, outside the ditch, having a *banquette*, from which a grazing fire of musketry can be brought upon the *glacis*.

Crémaillère.—A horizontal outline, which is indented or zigzagged.

Crest.—The top line of a slope.

Deblai.—The volume of earth excavated to form the *remblai.*

Demi-bastion.—A half bastion, or that part of a bastion cut off by the capital, consisting of one face and one front.

Demi-lune.—A work constructed beyond the main ditch of a fortress, and in front of the curtain, between two bastions, intended to defend the curtain; a *ravelin.*

Embrasure.—An opening in a wall or parapet, through which cannon are pointed and discharged.

Enceinte.—The main enclosure; the wall or rampart which surrounds a place, sometimes composed of bastions and curtains; called also *body of the place.*

Envelope, or *Envelop.*—A mound of earth raised to cover some weak part of the works.

Epaulement.—A side-work, or work to cover sidewise, made of gabions, fascines, or bags filled with earth, or with earth heaped up. It is used to afford cover from the fire of an enemy, but is not arranged for defence by fire.

Esplanade.—The glacis of the counterscarp, or the sloping of the parapet of the covered way toward the country; a clear space between a citadel and the first houses of the town.

Flank.—That part of a bastion which reaches from the curtain to the face, and defends the opposite face; any part of a work defending another by a fire along the outside of its parapet.

Flèche.—A field-work, usually at the foot of a glacis, consisting of two faces, forming a salient angle pointing outwards from the position taken.

Front.—That portion of the enceinte between the capitals of the adjacent salient angle of the polygon fortified; or it includes this portion, or any other works within or beyond it which are between the two adjacent capitals and connected with it by defensive relations. *Bastioned front*, a curtain connecting two half bastions.

Gabion.—A gabion is a hollow cylinder, of wicker-work, Fig. 2975, or strips of sheet iron, resembling a basket, but having no bottom. It is filled with earth, and serves to shelter men from an enemy's fire.

2975.

Gallery.—Any communication which is covered overhead as well as at the sides.

Genouillère.—That part of a parapet between the merlons and beneath the sole of an embrasure.

Half-moon.—An outwork, composed of two faces, forming a salient angle, placed just in front of the curtain of the main work, and just beyond the main ditch.

Hornwork.—An outwork, composed of two demi-bastions, joined by a curtain. It is connected with the works in rear by long wings.

Lunette.—A detached bastion, Fig. 2976.

2976.

Magistral.—The line where the scarp of a permanent fortification, if prolonged, would intersect the top of the coping or cordon. It is the master line which regulates the form of the work; called also *Magistral line.*

Palisade.—A strong stake, one end of which is set firmly in the ground, and the other is sharpened; also, a fence made of palisades, used as a means of defence.

Parados.—A mound of earth thrown up to protect a battery or other outwork from a fire in the rear.

Parapet.—A wall or rampart to the breast, or breast high; especially a wall, rampart, or elevation of earth for covering soldiers from an enemy's attack from the front.

2977.

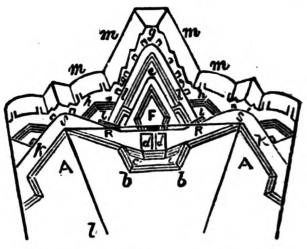

Postern.—A subterraneous passage between the parade and the main ditch, or between the ditches of the interior of the outworks.

Rampart.—An elevation or mound of earth round a place, upon which the parapet is raised.

Ravelin.—A detached work, with two embankments, which make a salient angle. It is raised before the curtain on the counterscarp of a place. In Fig. 2977, A A are bastions; *b b*, the curtain; *c c*, tenailles; *d d*, caponnière; *e*, ravelin; F, redoubt in the ravelin; *g g*, covered way; *h h*, re-entering places of arms; *i i*, redoubts in the same; *k k*, ditch; *l l*, ditch of ravelin; *m m m*, glacis; *s s*, exterior side; *s t*, capital.

2978. 2979. 2980.

Redan.—A work having two faces uniting, so as to form a salient angle towards the enemy. See Figs. 2978 to 2980.

Redoubt.—An outwork placed within another outwork, as at F and *i*, in Fig. 2977.

Remblai.—The earth or materials used in marking the embankments.

Revetment.—A facing of wood, stone, or any other material, to sustain an embankment when it receives a slope steeper than the natural slope.

Sally-port.—A postern gate, or passage underground from the inner to the outer works, to afford free egress for troops in a sortie.

Scarp.—The interior slope of the ditch nearest the parapet.

Tenaille.—An outwork in the main ditch in front of the curtain between two bastions; also an inverted redan.

Tenaillon.—A work constructed on each side of the ravelins, to increase the strength of the ravelins, procure additional ground beyond the ditch, or cover the shoulders of the bastions.

Traverse.—A work thrown up to intercept an enfilade, or reverse fire, along any line of work or passage exposed to such a fire.

Zigzag.—This term is applied to the principle on which the attack of places is based; and this mode of approach had long been in use in a rude way, until perfected by Vauban.

Zigzag is not only the proper course by which to advance in sieges, but it is the method of con-

necting the parallels and places of arms, and finally arriving at the close of the attack or breaching batteries, and the work is usually effected by sap.

Sappers could run a zigzag up to the work in two or three hours, under the protection of musketry fire, and finally place a quantity of gunpowder for forcing the gate or barrier, or the destruction of a stockade or other slight defence, such as savages or insurgent inhabitants throw up on the spur of the moment.

The following example will show how a zigzag may be applied:—

Supposing it desirable to force a work A, Fig. 2981, an approach may be commenced from the hollow B, and a zigzag carried up to the entrance D, forming a short line of sap C D, where a quantity of powder could be fixed at the point D, which would on the explosion enable the attacking party to rush from the hollow, and, taking advantage of the confusion, carry the work.

2981.

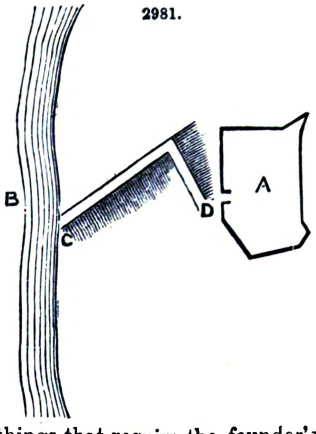

FOUNDATION. Fr., *Fondation;* Ger., *Fundament, Grundwerk;* Ital., *Fondamenta;* Span., *Cimiento.*

See Construction. Bridge. Docks. Railway Engineering. Water-works.

FOUNDING AND CASTING. Fr., *Action de fondre, Fonte;* Ger., *Formen und Giessen;* Ital., *Fondere.*

Fire-proof material and durable crucibles are among the first things that require the founder's careful consideration.

Fire-proof Material.—The apparatus in which smelting or melting operations are performed is constructed of such materials as will not be seriously affected either by the heat applied or by the chemical action of the minerals or metals. Besides these conditions, economy is generally considered; but we find, in most instances, that the saving of first expense should be a secondary consideration where fire-proof material is in question. The materials used as fire-proof are sandstone, clay slate, shale, talcose slate, mica slate, granite, gneiss, porphyry, trap, and others, all of which are found native. Most of the fire-proof material used is clay or aluminous sand, kaolin, and clay slate, which are formed into bricks, slabs, or blocks, so as to suit particular purposes. The artificial fire-proof stone, or brick, does not generally resist the chemical action of the metallic oxides so well as native material; it is therefore necessary to use compact native rock, where the action of metallic oxides is to be resisted. Bricks, when well made and of good material, withstand the influence of heat very well; and in all cases where sudden changes of heat are expected, fire-brick must be used in preference to any other material.

Materials which are considered fire-proof must be of such a nature as to resist the effect of heat, that of the metallic oxides, and the reducing influence of carbon also. Peroxide of iron is proof against heat, against most metallic oxides, and also resists silex very well; but it does not resist carbon. When the latter substance is present, or even its compound gases, peroxide of iron is reduced to protoxide, and forms now a strong alkali for any silex or acid which may happen to come within its reach. Silex, clay, magnesia, lime, and baryta, are substances which are melted only by a very high heat, about 4000°, which is not required in any smelting operation. It is therefore sufficient if the fire-proof stones consist chiefly of one of these elements. Their combinations melt more readily than each by itself; but it is sufficient when the main body, the bulk of the stone, is formed of one of them.

Native Fire-proof Material.—Quite a number of rocks, slate, and shale, serve the purpose of refractory stones. Some of these are so perfect as not to require more labour than quarrying and dressing; others must be broken, and cemented again, in order to answer the purpose. As the refractory character of stones depends chiefly on the fusibility of their elements, we select them in most cases simply with reference to this quality; and as alumina, silex, magnesia, or lime, are fusible only at a degree of heat which is not often required in smelting operations, it appears to be all-sufficient, in order to secure durability, to select the most convenient form of these articles. This, however, is not the case. Pure lime is extremely refractory, but readily fusible if any silex is brought in contact with it; and as all fuel contains silex, the simple act of using coal or wood in a furnace built of the best kind of limestone will soon destroy it. In many instances, the presence of an excess of limestone is advantageous in smelting operations, and is frequently resorted to; in these cases, the inner walls of a furnace may consist of limestone, because the silicious matter of fuel and ore is absorbed by the flux, and little injury is done to the walls. Reflections of this kind generally decide the selection of rocks for fire-proof material, as we shall show hereafter. Native rocks are not often found to be of similar composition, not even in the same locality, for which reasons the selection of fire-proof stone is an operation which must be decided by actual test. It is very well known that the composition of sandstone, clay slate, mica slate, talc slate, gneiss, and granite, and also limestone, varies in different localities, and often in the same compass of a quarry.

Sandstone.—When sand, formed by the disintegration of rocky matter, is washed down in streams and deposited in the beds of large rivers, or the bottom of lakes and oceans, and when such deposits are elevated above water, or become dry land, the fine particles of lime, clay, oxide of iron, and other substances, which adhere to the particles of sand, and which more or less fill the crevices or spaces between the grains, become dry, and form in the meantime a chemical combination with the sand. The consequence of this close and intimate contact between these substances of opposite electrical qualities, is the formation of solid rock, in which the isolated grains of quartz are held together by a larger or smaller quantity of cement. The distinguishing quality of the sandstone for our purpose consists in the kind of cement and the quantity of it. If the cement is lime, we cannot expect the sandstone to be very refractory, for not only does silex melt readily with

lime, but the stone becomes brittle when exposed to fire. Peroxide of iron may form a good fire-proof stone with silex, provided the amount of iron is not too large, say not more than 5 per cent. The red, and often brown sandstone, of the Pennsylvania anthracite formation is a fire-proof stone of excellent qualities. This stone has been subjected to a slow heat in the earth, which cemented its particles firmly together. The best cement for sand, in the formation of sandstone, is silex itself, and the resulting rock is for these reasons denominated silicious sandstone, in contradistinction to calcareous, ferruginous, or argillaceous sandstone. Silex is soluble in pure water, such as rain-water; and when such a solution is poured upon a bed of sand, it will penetrate and combine with or dissolve some of the sand; the consequence of which is, that the soluble parts are retained by the heavy grains, and these cannot be moved, the soluble silex forming a gelatinous cement for the grains of sand. Sandstone formed in this manner is, as a matter of course, very refractory, and liable to fracture when heat is suddenly applied. Slowly heated, and not exposed to changes of heat, this stone forms a durable hearthstone in blast-furnaces. Stones of this kind are frequently found in the bituminous coal region, and used as hearthstones. In many respects the argillaceous, in which clay forms the cement, is superior to the silicious sandstone; this refers particularly to those cases where a change of heat is inevitable. Clay does not form a strong cement, and such stones are generally found to be soft in the quarry, but harden on being exposed to the air or heat. These, however, do not generally resist high heat so well as silicious sandstones, and when fluxes come in contact with them when hot, they are soon melted. Sandstones which contain spangles of mica, or particles of pyrites, or which are coloured by any metallic oxides, particularly protoxides, are generally not fire-proof; still there are instances where such stones are used to advantage.

In the selection of sandstones for hearthstones we must be guided chiefly by experience. Coarse-grained stone, such as millstone grit, which occurs in the lower strata of the coal regions, is generally found to be of good quality. The coarse sandstone, in the higher strata of the coal formation, is not often adapted to resist a strong heat and the influence of fluxes, because its cement is chiefly lime, clay, and iron. In these upper strata, the fine-grained stone appears to be superior to the coarse grit. Transition sandstone, or old red sandstone, is generally found to be durable, particularly those kinds in which grains of white quartz of the size of peas, or small beans, are visible. Sandstone is peculiarly suitable to serve as a fire-proof stone; it resists heat to a higher degree than almost any other stone, and if compact, it is less attacked by fluxes than any other kind of rock; it has, besides, the advantage of being conveniently found, and it is easily quarried and cut into such forms as are required.

Sandstones may be tested by acids as to their composition, but the result cannot be depended upon, and is of no practical use. The only safe test is that by heat and fluxes. In order to investigate the refractory quality of a rock, a fragment of it is subjected to a gentle heat, which is not much higher than that of boiling water, for at least one week, or longer, after which it may be exposed to a higher heat. The latter is applied in a reverberatory furnace, or in a smith's forge, and should last at least for four or five consecutive hours, the heat being gradually raised to the highest pitch. The fragment, after being gently cooled and broken, must show a compact fracture, not vitrified in any part in the interior; its surface may be glazed, and it should not have lost much in weight. If, after heating it, the interior of the stone is brittle, porous, and friable, or if it is vitrified and strongly coloured, it will not resist the influence of fluxes, and it may be considered useless for resisting high temperatures. Quartz is extremely sensitive to changes of heat, and in all cases where it is subjected to them, it should not be used; the changes of heat caused by adding fresh fuel it cannot resist. Sandstone is therefore useless in air-furnaces, and in all furnaces which are subject to alternate charges of fuel, or draughts of cold air, such as puddling furnaces, the top of blast-furnaces, and all refining and reverberatory furnaces.

Clay and Clay-slate.—This mineral forms extensive rocks, and often whole mountain ranges: it is composed chiefly of silex and clay, but is never free from metallic oxides, and in most instances it contains carbon. The latter substances cause it to be fusible at a low heat, and its use as fire-proof stone is therefore very limited.

Slaty Clay is found in the regions of mineral coal; it forms a most valuable substance for the manufacture of fire-bricks, which are in fact chiefly composed of this clay; good fire-bricks are extensively manufactured of it; but it is of no use in its raw condition, for it requires a strong fire to make it sufficiently compact for adhering together. Some modifications of this kind of slate, when it contains a large amount of silex, and is stratified, assuming the form of shale, are used as fire-proof stone in furnaces, under steam-boilers, reverberatories, or at the top of blast-furnaces, also for in-walls; but there is little gained in its application; fire-bricks are cheaper in the course of time, because they last longer and require less repair.

Clay.—This substance is not often used in its raw state, but chiefly in the form of bricks, and as fire-proof mortar. Fire-clay is recognized by its colour, which is white, and is retained after exposure to a strong fire. Some clays will change their colour into a more or less grey, or red, on being calcined; these are not generally very refractory. Good clay, when fresh, emits a peculiarly disagreeable odour, an argillaceous smell; it also adheres strongly to the tongue, when the former is dry and the latter moist. The smell depends entirely on organic matter, for which clay has great affinity; it emits therefore that peculiar smell, although it is not actually necessary that organic matter should be present in the clay; breathing upon it may impart it. Clay may contain silex chiefly, and be a good fire-clay; it does not follow that clay which does not adhere to the tongue is not a fire-proof clay. The sources of good clay are feldspathic rocks; most of these clays are definite compounds of silex, alumina, potassa, lime, magnesia, oxide of iron, and water, but it is not necessary that a good clay should be a definite compound; on the contrary, the less such is the case the more refractory it is For these reasons most of the plastic clays are mixed with sand or pure quartz previous to forming bricks of them. Clay may be assayed and its composition determined previous to its application, but such an assay is of more interest to the scientific man than

to the metallurgist. In some cases the elements of composition have an influence on the results of the smelting operation. The same test which is used for sandstone is applied here. Good clay must shrink uniformly, not crack in drying, and form, after exposure to a strong heat, a compact solid mass, neither vitrified nor brittle. The mixing and tempering of clay has a decided influence on its refractive qualities, and good machinery and good furnaces are required to form good fire-brick. Some clays are plastic, that is, they may be moulded with great facility into any shape, which they will retain in drying and baking. This quality is caused by the presence of more or less soluble silex, and hydrated clay; anhydrous silex is not plastic. However valuable this quality of clay may be to the potter and manufacturer of porcelain, it is of little use to the metallurgist; all we want is, that clay should form a compact, hard substance which resists fire; the coarse forms in which it is applied do not require a particular degree of tenacity. In order to test clay, it is sufficient to mix it well by hand, and form it into slabs of half an inch in thickness, which are gently dried at first so as to prevent the formation of cracks, and then exposed to a strong heat. When clay is so fine or plastic as to crack in drying, it is necessary to mix it with sufficient fine, pure, silicious sand, to prevent that evil.

Green or fresh clay is not often applied at furnaces; it is, however, used in some smelting furnaces for repairs, and for hearths and boshes, when mixed with a large quantity of sand; also for forming bottoms in reverberatory furnaces, and others. Its chief use is for mortar.

Talcose Slate.—This substance often forms a very durable fire-proof stone, particularly when the slate has been exposed to a strong hardening heat in the native rock. This kind of slate forms soapstone when soft, but in that variety where it is cemented by heat it is extremely hard. This substance is extensively used as refractory stones in puddling furnaces, for which it is adapted by its resisting the influence of the oxides of metals exceedingly well.

Mica Slate.—This ranges with the talc slate, and in many instances it is very doubtful if the so-called talc slate is not actually mica slate, or merely a modification of it in form, characterized by the extreme minuteness of the leaves of mica. These slates resist fire well, if not too much mixed with metallic oxides, or with too much mica. The quantity of quartz determines the refractibility of the stone. This material is very convenient, because in most instances it is easily quarried and dressed to the desired forms. Chlorite slate, gneiss, porphyry, granite, and similar substances, resist fire in some instances very well; but their quality depends entirely on a peculiar composition. As a rule, these rocks are not very refractory, and are all liable to be broken by heat.

Artificial Stones; Fire-brick.—When natural stones cannot be obtained, or the purpose requires others, the substances of which artificial stones are composed, such as clay and silex, are pounded, ground together, and formed into bricks or slabs of any form that may be desired. Quartz, which is most in use, and in fact the only available substance besides clay, is pounded in stamping mills, such as represented in Fig. 2982. This operation is either performed dry, which causes much dust

2982.

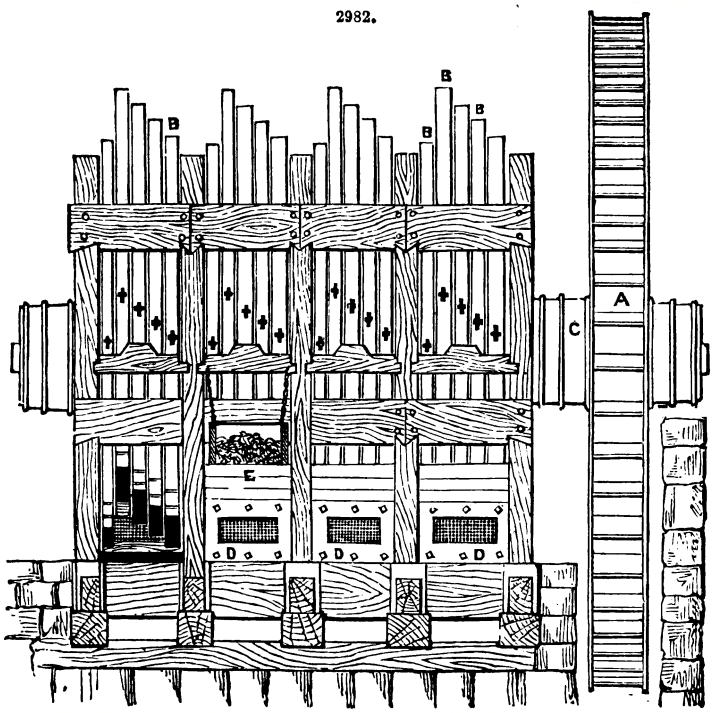

and premature destruction of machinery, or it is done by passing a current of water through the stamping box, and gathering the sand in a trough, in which it settles, and the water flows off. If the quartz is hard, such as river pebbles, or milky quartz, it may be exposed to a red heat in a roasting heap, after which it may be pounded quite easily.

Of quartz, thus coarsely pounded to the size of a grain of wheat, or smaller, three parts are mixed with one part of plastic fire-clay; the whole well soaked with water, and diligently mixed, forms an excellent fire-proof sandstone, when merely air-dried Of this mixture, bricks and slabs are easily formed, which may be used air-dried, in reverberatory, puddling, reheating, and all such furnaces, where no actual work or rubbing is done on the surface of the brick; for though they are fire-proof, they cannot resist abrasion when rubbed by solid matter. Bricks of this kind may be baked, but as they require rather a strong fire to make them compact, they are not generally; nor is much gained by a limited heat. These artificial sandstones, or fire-brick, are in many respects superior to the common fire-brick; they are cheap where the materials are close at hand, for the stamping is not expensive, and the moulding and drying causes hardly any expense. An air-dried brick is easily laid, and the joints are secured with remarkable facility, for the brick is suited to absorb the water from the mortar rapidly, which causes the latter to dry quickly; this affords an opportunity of using a large quantity of mortar; and as the mortar itself is but the solution of fragments of brick, the bricklayer's work is done very cheaply. In this case, as in all others, particular attention must be paid to the mixing of the clay and sand; too much labour cannot be expended on this part of the work. In mixing plastic clay with sand, it is the object to bring each particle of clay in contact with a particle of silex, and produce by that means a uniformity of mixture which is at the same time adhesive, and free from friable spots. This material, when well prepared, is eminently fitted for forming boshes, and even hearths, in furnaces. It may be used in the form of bricks, slabs, or what is the best, rammed down in a moist condition, so as to form one solid mass without joints.

When fire-bricks of a finer composition are required, such as are made of slaty clay, or of kaolin, or the silicious fire-clay of the eastern slope of the Alleghanies, it is necessary that the materials should be ground fine; this refers particularly to the slate clay. The clay of the coal regions, which is generally hard when newly dug, is exposed for some time to the atmosphere, under the influence of which it falls to small cubical pieces; and when exposed for a season to frost and the changes of temperature incident to winter, it is converted into a fine meal, which is easily ground. When quartz or sand is required for the increase of the refractory quality of the clay, it is mixed with it; or, when too coarse, it is ground first by itself, and then mixed in due proportions. The proportion of silex to clay cannot be determined by applying scientific principles; this must be found out by experiments, which are easily made by mixing various quantities, and exposing them to the same degree of heat. The quartz used for these purposes must be taken either from pure veins, or large quartz pebbles found in river bottoms. Sand obtained from pounded sandstone, or millstone grit, or river sand, is never sufficiently pure for fire-brick, or for retorts or crucibles. Clay thus mixed with quartz, or pure, is subjected to grinding in a mill similar to that represented in Fig. 2983. In most cases it is ground dry; some manufacturers grind it wet, because it works faster. The particles, when sufficiently fine, are swept away by the current of water, deposited in a box, and from thence removed to be tempered. The latter operation is frequently performed in the mill, Fig. 2983, and, in fact, is thought sufficient when the grinding is accomplished; but this is not the case. Some clay may require very little work; still, no harm is done by much tempering; good clay is often spoiled for want of the proper amount of work. An ill-made brick is porous and light; a good brick is compact and heavy; the first may be good enough for steam-boiler furnaces, but for smelting furnaces, where heat and fluxes, and the motion of fuel, cause abrasion, bricks should be as compact as flint. The latter quality is chiefly obtained by careful grinding and tempering. For this purpose a mill is used similar to those used for mixing loam for common bricks, which is shown in Fig. 2984. The main part of this machine is an iron or wooden cylinder, of from 3 to 4 ft. high, and 24 in. in diameter. When of wood, it forms an inverted cone, so as to admit of being firmly bound by iron hoops. In the centre of this clay-mill is a vertical shaft, provided with some radial knives. This shaft is frequently of wood, but is better when made of iron; the

2983.

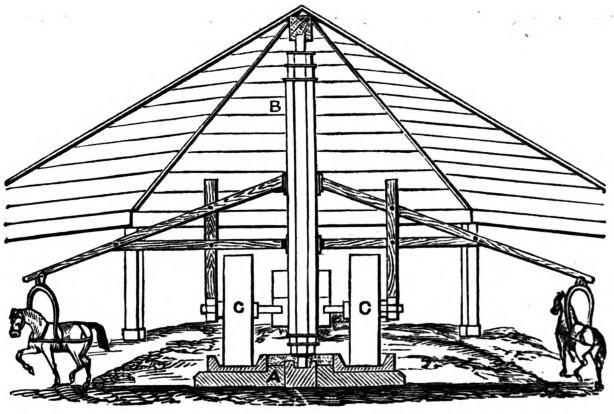

2984.

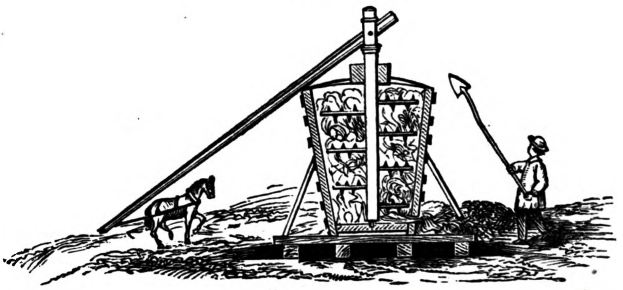

knives must be in all cases of iron. The latter are a little twisted, so as to cause the clay to move downward. The tempered clay is thrown in at the top, and the mill always kept full. At the lower end of the cylinder, close to the bottom, is a square hole, through which the clay is pressed, and issues continually. This square hole is provided with a gate, so as to regulate the quantity of clay which is permitted to pass. If the clay is not sufficiently mixed by passing it once through the mill, the process is repeated; in some cases this is required five or six times. In some instances the knives are provided with projecting points, so as to keep the clay in constant motion, as shown in the engraving; this may be advantageous, but it requires more power than plain knives, and a stronger machine than can be made of wood. This mill, of course, may be driven by horse-power, as shown, or by a water-wheel, or a steam-engine. When circumstances admit, it is advantageous to temper the clay when warm; this causes the air or gas in the pores of the clay to expand and escape, so that a close contact of the particles may be accomplished. It has been proposed to mix carbon, either in the form of graphite, or anthracite dust, or coke-dust, with the clay of which fire-bricks are to be made, but we are not aware that it has been put in practice to any extent. For crucibles, such a mixture is used; the black-lead pot is one of the kind, and the pots in which cast steel is melted are another kind; the latter are generally a composition of clay and coke-dust. For thin pots, and similar articles, we perceive no objection to coal, but in bricks and other heavy masses there are serious objections, which have been confirmed by experience. Coal, no matter in what form, causes always the formation of gas when in contact with oxides, such as clay and iron. If the substance is thin, such as a crucible, this gas may escape on the unglazed side; but if the mass is thick, it must escape at the hottest, or glazed, surface, and is the cause of a premature destruction of the fire-brick. Coal diminishes the shrinkage of clay, and thus far it is advantageous in the clay of crucibles, in preventing their fracture when in fire.

Fire-bricks are not generally manufactured from raw clay, at least not wholly of it; and there is no doubt but that a twice-burnt brick is superior to a brick made of fresh clay. The prepared and ground clay is subjected to one fire, either in the form of brick or in lumps, then ground and mixed with about one-third or one-fourth of fresh clay; this mixture is formed into bricks and baked. Some of our manufacturers do not follow this method, but there is no doubt, if their bricks are good now, they would be far better if baked twice. For this reason, brickbats, ground and mixed with a little fresh clay, will form a superior brick to the original brick made of raw clay.

Fire-bricks, in order to be baked, are generally subjected to a strong heat, in ovens built in a peculiar manner; this is not necessary if the bricks are not to be transported far, and if too much clay is not used in the mixture. In the latter case the brick is subject to much shrinkage, and when exposed to the heat in a furnace the joints between the various layers will separate and allow the heat to penetrate, which now acts on many sides and soon destroys it. All that kind of fire-proof material which must be transported, or in the composition of which a large amount of clay is necessary, must be baked; but those bricks which are manufactured and used on the spot, and which contain a large amount of silex, do not require baking previous to their use. In Fig. 2985 is represented a vertical section of an oven in which fire-bricks are baked. It is in appearance similar to a porcelain kiln, only not so large. The diameter is generally from 10 to 15 ft., and

2985.

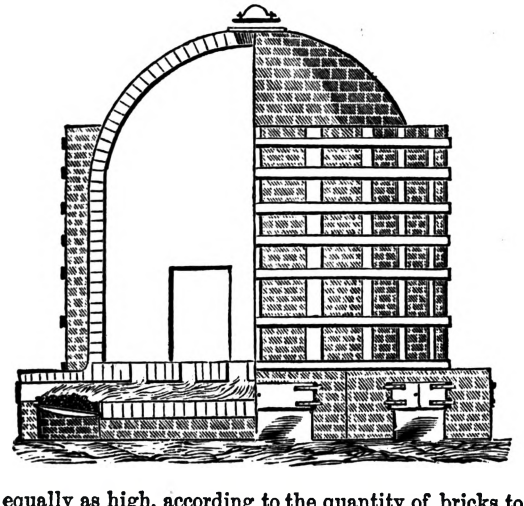

2986.

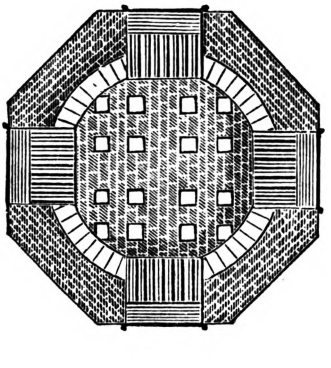

equally as high, according to the quantity of bricks to be made. One cubic foot of space will contain eight bricks of 10 by 5 in. The capacity of an oven is thus easily calculated. One charge will take a week's time—three days for baking and three for cooling. The oven is built wholly of fire-brick, secured by iron tires and vertical binders. The floor is also formed by fire-brick with draft-holes or flues, as shown in Fig. 2986, wherein four fire-places are indicated. This oven may be operated by one or two fire-places, but there is no harm done in having more of them. The fire-places may be without grate-bars in case wood is used as fuel; but when stone-coal is burned there must be grate-bars, which are withdrawn and the stock-holes shut with ashes when the baking is finished. At the top of the oven is a round aperture of about 20 in. in diameter, through which the hot gases escape; when the heat is at the highest degree this top is shut by an iron plate. At the floor there is an entrance of 3 ft. in height and 2 ft. in width, through which the oven is set, or

filled with bricks; this is temporarily shut with bricks, which are removed when the heat is finished and the oven cold. Through this door the bricks are also discharged. There are various forms of ovens, and also of mills, in use; the illustrations represent those most frequently found and to all appearances the best.

J. Jobson's Moulds for Casting Metals.—In the ordinary plan of moulding with odd-side boxes, the pattern from which the casting is to be made is imbedded partly in the sand of the top box, or in an odd-side board prepared for the purpose, and the bottom box is then placed upon it and rammed full of sand, imbedding the rest of the pattern; the boxes are then turned over, and the top box or odd side lifted off, leaving the pattern in the sand in the bottom box; parting sand is then applied, and another top box rammed upon it, the pattern still remaining between; the boxes are then separated, the odd side is again put on, the bottom box turned over, and the pattern left upon the odd side. After the impression of the pattern in the sand of the two boxes has been completed, by repairing any damage done in removing the pattern, the top box is again placed upon the bottom one in its original position, and the casting made.

In Jobson's process, after the pattern has been first partially imbedded in the sand of the bottom box as in ordinary moulding, Fig. 2987, and the parting surface been accurately formed, the top box is then placed on, and is filled with plaster of Paris, or other similar material, to which the pattern itself adheres. When the plaster is set, the boxes are turned over, the sand carefully taken out of the bottom box, and a similar process repeated with it, Fig. 2988, using clay wash to prevent the two plaster surfaces from adhering; this forms a corresponding plaster mould of the lower portion of the pattern. These two plaster moulds may be called the *waste blocks*, as they are not used in producing the moulds for casting, but are subsequently destroyed.

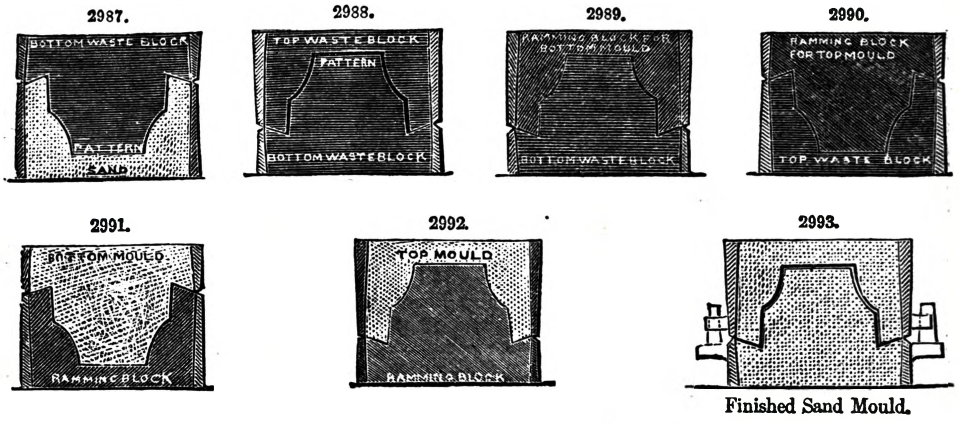

Finished Sand Mould.

Reversed moulds in plaster, Figs. 2989, 2990, are now made from these waste blocks, Figs. 2987, 2988 (the pattern being first removed), by placing upon the bottom box a second top box, an exact duplicate of the former top box, and filling it up with plaster (having used clay wash as before), and doing the same with the other box. Reversed moulds are thus obtained, from which the final sand moulds for casting are made, by using them as *ramming blocks*, upon which the sand forming the mould is rammed by placing a third duplicate top box, Fig. 2992, upon the ramming block, Fig. 2990, and a corresponding bottom box, Fig. 2991, upon the ramming block, Fig. 2989.

The requisite gits, runners, and risers are formed previously in the original sand mould, and are consequently represented in the ramming blocks, Figs. 2989, 2990, by corresponding projections or ribs upon the parting face of the one, and hollows in the other (which are then stopped up with plaster), and these are properly repeated in the final sand moulds, Figs. 2991, 2992; these last, therefore, when put together, as in Fig. 2993, form a complete mould for casting, just like an ordinary sand mould, but having some important advantages.

Any number of succeeding moulds can be made from the original ramming blocks by the simple process of ramming, without any handling of the pattern or turning over the boxes, both top and bottom moulds being rammed independently and at the same time if desired. The parting being once accurately formed in the original mould, all the succeeding ones are necessarily correct, without any further care being required; and by carefully trimming the original and slightly paring down the inner edges of the parting faces, if requisite, the faces of the final sand moulds have a corresponding fulness, and are readily adjusted, after the first trial, to fit so closely together that practically no fin is left on the castings. Also the labour of forming the gits and runners afresh for each casting mould is avoided, by having them completely imprinted upon each mould in the process of ramming; and by this means all the risk is avoided of imperfect castings arising from want of uniform care or judgment in the formation of the gits, &c., by the moulder in the ordinary process. This is the more important in the case of difficult castings, where several trials may be required before the best mode of running the metal is ascertained so as to ensure sound, good castings; and by this process the exact repetition of the same plan is ensured, without requiring any further attention from the moulder.

A small hollow is imprinted in the ramming block for the top box, into which the plug for forming the git is rested whilst the box is rammed, and by this means the git is ensured being formed in the right place, without any care on the part of the moulder.

The process of moulding by this plan is so simple and certain that ordinary labourers are quite

sufficient to make the best castings, as they have nothing to do but ramming the sand upon the two blocks in each case, forming the back and front of the pattern, and putting them together without having to pay any attention to the parting gits or runners; and also it is much easier to lift the boxes when rammed off from the blocks, than to pick out the pattern from the face of the mould as in the ordinary process: the whole being in one solid mass in the new plan, it can be lifted more steadily, with less risk of injury to the sand mould.

When the pattern is long and very thin and intricate (as in the case of an ornamental fender front) where the general surface is also curved or winding, as in Figs. 2994 to 2996, the difficulty

2994.

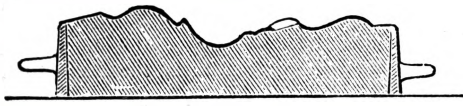

Ramming Block for Top Mould, with pattern secured on face of block

2995.

Ramming Block for Bottom Mould.

2996.

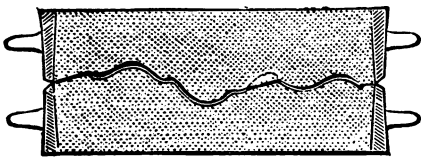

Finished Sand Mould.

2997.

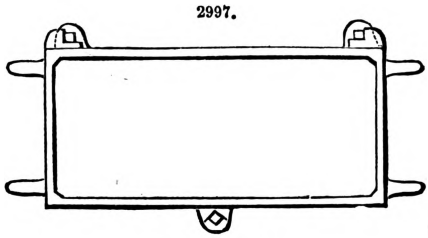

Plan of Boxes.

of picking out the pattern from the mould is so great as to require the most skilful workman; and the length of time required for repairing the injuries of the mould, causes about eight sets of fender castings a day to be the general limit to the number that can be moulded by each man and boy. But however difficult the pattern may be to mould in the ordinary way (if it is arranged to draw properly from the mould), with the process of Jobson the labour is very little greater than with an easy pattern, and the saving of time is so great that as many as thirty a day are moulded on the average by one labourer and boy; being four times the number that the best moulders can produce by the ordinary plan.

When the pattern is slender and long it is liable to be broken in the frequent handling to which it is subjected in the ordinary process of moulding, and the expense and delay caused by breakage of patterns is of serious consequence in light ornamental work, where the patterns are often very expensive; but in the new plan this is entirely avoided, as the pattern is never handled at all except in the original process of moulding to form the ramming blocks.

When the face of the castings is required to be particularly well finished (as in the case of ornamental work) a brass or other metal pattern is made, and is dressed up and finished to the degree that may be desired in the castings, and any chasing or other additional ornament put upon it; then after forming the ramming block for the bottom box by a plaster-cast from the pattern in the manner before described (see Fig. 2995), the pattern itself is made to form the permanent face of the ramming block for the top box (as in Fig. 2994) by leaving it in the mould when the plaster is poured in, so that the plaster forms merely the parting face, and a solid back to the pattern. In this case, the iron pattern is secured to the cross-bars of the box by several small bolts screwed up to plates at the back of the box, so that when the plaster is poured in, filling up the whole vacant space of the box, and setting solid around these bolts and over these nuts, the iron pattern becomes so firmly secured in the box that no ramming or moving it is subjected to afterwards has any risk of loosening it.

In this plan the mould for the face of every casting is formed from the original metal pattern, and the pattern itself is firmly and permanently secured in the plaster bed, so that however thin and delicate it may be, there is no risk of injury to the pattern in moulding any number of castings. It is asserted in the P. I. M. E., 1854, from which this article is taken, that as many as 3000 have been cast without injury from a slender ornamental pattern.

In forming the ramming blocks, common plaster of Paris is generally employed, as the most convenient and economical material, and this is found to be sufficiently durable for general work; the blows of the rammer are deadened by the sand in the box, and do not fall directly upon the plaster block, so that there is no risk of injury with ordinary care in ramming. When a greater number of castings are required to be moulded from one pattern, or when the size or nature of the mould renders a harder face advisable, a metal face is employed for the ramming block of the bottom box, or for the parting surface of one or both blocks. This is formed simply by running into the mould, when prepared for the plaster, a small portion of metal, consisting of zinc hardened with about $\frac{1}{15}$ part of tin; sufficient metal being used to form a strong plate for the surface of the ramming block, and the rest of the space at the back filled with plaster as usual. In practice it is more convenient generally to reverse the mode of running this metal for the face of the mould, by first ramming the box, when prepared for the plaster, full of sand, then lifting it off, and paring off the surface of the sand wherever the metal is wanted to such depth (about $\frac{3}{8}$ of an inch) as may be desired for the metal, and when the box is replaced in its former position the metal is run in, filling up these spaces where the sand had been cut away. The sand in the upper box at the back of

the metal face is then all removed, without moving the box (part at a time if requisite) and plaster poured in above to fill up the box and make a solid back as before.

The metal face is firmly secured to the plaster back by several small dovetail blocks cast upon the back of the metal, by cutting out corresponding holes in the sand mould before the metal is run in. Various modifications of this plan of construction are employed, according to circumstances, for economy or convenience, and sometimes the face of the ramming block is partially covered by separate pieces of metal; but in every case the entire face of the two ramming blocks forms a perfect counterpart of the intended casting (half being represented upon each), surrounded by parting faces which exactly fit one another, because the one has been moulded from the other.

Where the pattern is long, and a metal face is employed, a narrow division is made, subdividing the metal face into two or more lengths, to allow for the shrinking of the metal forming the face, the effect of which is then found to be imperceptible. The plaster ramming blocks are varnished when dried, to preserve them from damp; and in moulding from them, the faces of the blocks are dusted with rosin, to prevent adhesion of the sand.

This process of producing blocks, though somewhat complicated in description, involves practically but little increase of work over the process of moulding required for the first casting produced by the ordinary method; but every subsequent casting, instead of requiring a repetition of the whole process of the first moulding, as in the ordinary method, is moulded by simply ramming the boxes upon their respective blocks. The ordinary odd-side boxes are used for this purpose, all that is requisite being that every top box fits steadily and securely upon every bottom box, so that they may be interchanged in the process of forming the ramming blocks, without disturbance of the relative position of the pattern. An improved form of the steady pins for connecting the top and bottom boxes has been adopted, as shown in Figs. 2993, 2997, which is easier to construct with accuracy. Instead of four or more round pins fixed on the bottom box, and fitting into corresponding holes in lugs cast upon the top box, vertical angular studs are cast on each bottom box, and fit against corresponding projections on the edge of the top box (as shown in the plan, Fig. 2997, and the section, Fig. 2993); the only fitting required in making the boxes is to file the touching angles of the pins so as to fit one standard top box, and the projections on the top boxes to be all fitted to one standard bottom box.

It has to be noticed that in the ordinary plan of moulding, and by the odd-side and plate methods, one side of a pattern is not available while the other is in use; by the process of Jobson each pattern is equal to two, as it will be evident that both blocks may be worked from at the same time.

Casting Metals under Pressure, Smith and Locke's process for.—The apparatus which is here selected for illustration, but to which the invention is not necessarily restricted, consists of a rotary wheel or cylinder, Fig. 2999, on the periphery of which are arranged a series of moulds, each formed of a pair of hinged metallic plates, which while the casting is being performed are held firmly together between stationary housings, suitable rollers being interposed between the rotary mould-plate and the stationary housings to reduce the friction. Each of the mould-plates is provided with one or more springs, which, as the rotation brings the moulds successively opposite recesses in the housings, cause the mould-plates to separate with a sudden movement, causing a jar which effectually detaches and discharges the casting. This effect is assisted by pins which are driven inward as the mould-plate is separated, and in their retracted position form parts of the mould. The continued rotation of the wheel carries the mould-plates between converging planes, which gradually close the moulds and conduct their rollers between the parallel parts of the housings by which the plates are held to receive the molten metal which is injected into the moulds from a cylinder by a sliding piston or plunger. A detachable non-conducting lining is applied to the interior of the cylinder, K L, each time before it is filled, and serves the combined purposes of preventing the molten metal setting or adhering to the metallic cylinder, and effectually packing the joint between the moving piston and the cylinder. From this reservoir the metal is forced through a contracted aperture directly into the moulds, the gates of the latter being funnel-shaped, so as to cause no interruption to the passage of the metal. A continuous pressure is applied to the metal within the cylinder during the casting operation, and the partitions between the moulds being tapered to an edge cause no perceptible interruption to the flow as they pass the discharge orifice of the reservoir. The reservoir is mounted upon a sliding bed provided at its forward end with a segmental plate or standard which fits around the periphery of the cylinder, so as to tightly close the gates of the moulds, and serves also as a mouthpiece for the injecting cylinder. The sliding bed is held up to the cylinder by a screw and spring, the latter permitting it to yield, so as to avoid danger of breakage in the event of any hard matters getting between the mouthpiece-plate and the cylinder. The injecting and pressing apparatus may be used with equally good effect in connection with stationary moulds, the said moulds being arranged either separately or in any number together, and placed either horizontally or vertically; or in cases where it is desirable to cast a number of small articles at one time, any number of moulds, therefore, may be placed together within a single flask or casing, and a single injecting reservoir may be used for all. The molten metal may be made to enter the moulds horizontally, or may be forced upward from the lower part, or introduced at top, as convenience or various circumstances may dictate. For casting a large number of small articles simultaneously, the stationary moulds are preferably arranged in a vertical nest or series, and the metal injected at bottom, the separate moulds or parts of moulds being provided with suitable grooves to form, when united, gates or sprues for the admission of the fluid metal. A cluster or connected series of these moulds being placed together in their flask or casing are supported and firmly compressed by a plate, which is forced against the moulds by set screws tapped into the top, bottom, or side of the flask, in order that the moulds may resist the pressure of the metal when injected, and not part or open at the joints, and thereby cause the formation of fins or seams in casting. The entire flask may then be enclosed in a tight box from which the air can be exhausted by an air-pump of large capacity,

small perforations being formed in the walls of the flask and in the body of the moulds to permit the escape of air and gas from all parts of the latter. Whenever the air and gas exhausting process is used, care must be taken that the joints of the outer chest are all tightly closed, and the junction between the said chest and the reservoir is luted with wet clay or other material to make all air-tight.

As a material for the moulds, steel and many other metals may be used to good advantage, especially for small moulds in a rotary apparatus, such as is represented in Figs. 2998 to 3000.

2998.

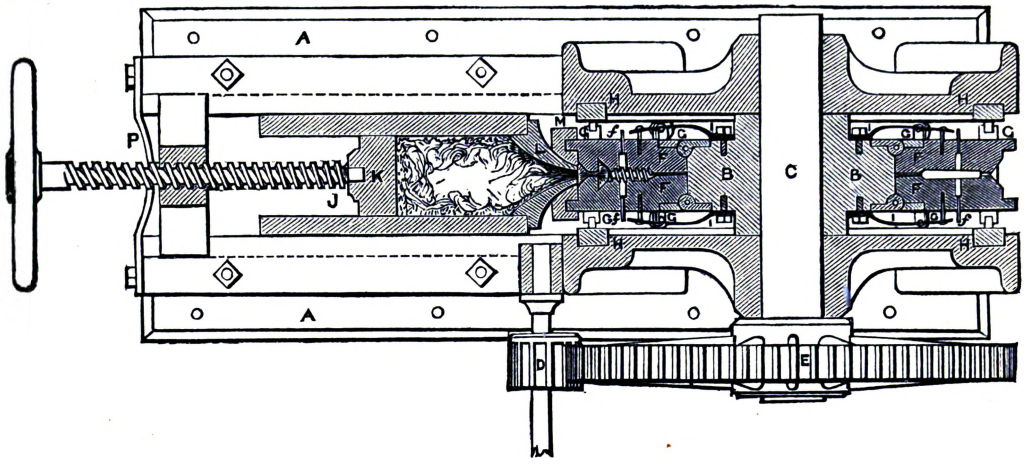

2999.

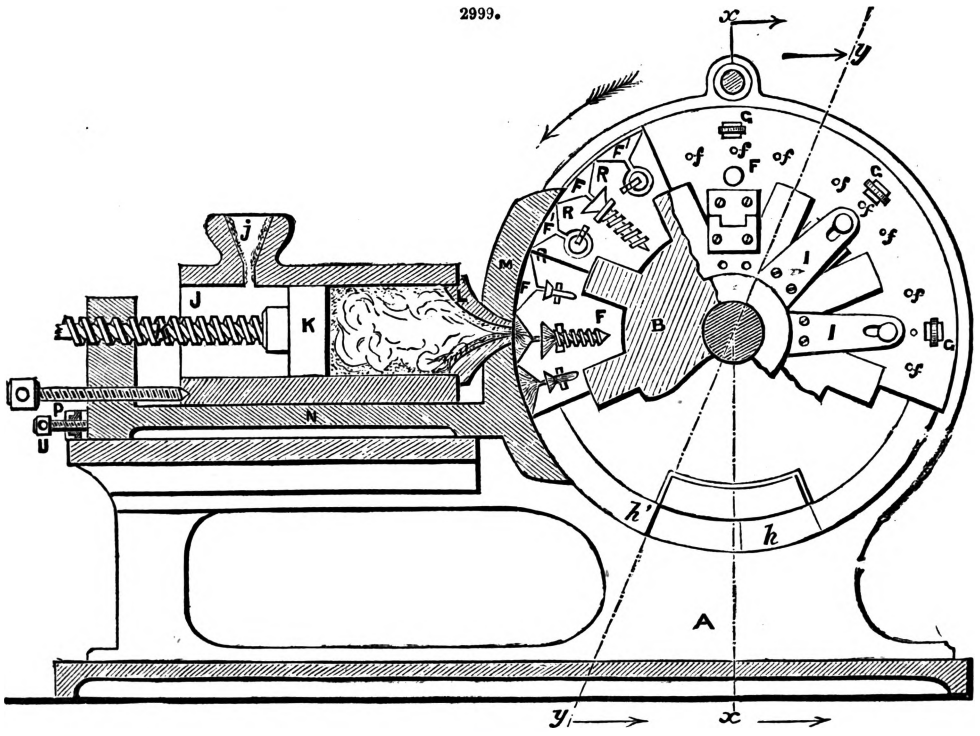

The great rapidity with which refractory metals chill and become set causes difficulty in the use of metal moulds, even though the said moulds may be heated prior to the introduction of the metal. This rapid setting would afford insufficient time for applying pressure to the metal, unless this is done instantaneously by apparatus such as we here describe, and even with the improved apparatus there is danger of the formation of a skin on the surface of the metal, which with elaborate or fine work may cause a mottled, streaked, seamed, or otherwise defective appearance. Again, if metal moulds are highly heated to prevent to a certain extent the sudden chilling, the fluid metal will unite with the moulds, especially the alloys of copper and tin; and even if metal moulds could be used with advantage, the expense of making them would forbid their use in cases where only a limited number of castings are wanted of one and the same pattern, and in some cases the utter impossibility of making them.

Where the diameter of the apparatus or the size of the flasks or mould-boxes or other circumstances will admit of it, it is better to form the moulds of a composition which will combine the following qualities, namely;—First, non-conductibility to heat; second, sufficient strength, density, and hardness to resist the pressure exerted on the fluid metal to prevent the latter entering the pores under such pressure, and to avoid danger of the fine lines and sharp corners being injured in necessary handling, or crushed or flattened by the pressure; third, the presence of numerous very small pores, which, while they will not permit the entrance of the molten metal under pressure, will allow the withdrawal of air and gas from the moulds.

3000.

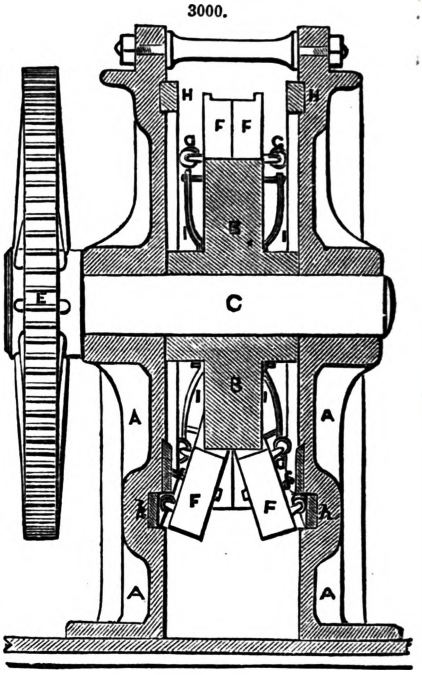

The production of composition moulds combining the above qualities constitutes one important part of this invention. They may be made as follows;—Take fine clay of such kinds as will resist a considerable degree of heat without glazing or melting on the surface. Said clay, after it has been well mixed and washed in the same manner as it is prepared for pottery, is made dry, so that it may be reduced to powder. When reduced to powder it is moistened with water about as much as sand used for ordinary moulding. The pattern, if it is to be used for a number of moulds, ought to be of metal. For one or two impressions, said pattern may be of hard plaster of Paris or hard wood. If of either of these two last-named materials, it must be first coated with shellac varnish; the pattern is then rubbed over with a little oil (preferably paraffine oil), applied with a brush, so that it may be released easily from the moist clay. After oiling, the pattern is coated over with a fine paste-like slip made of the same clay used for moulding. The pattern or a number of them are placed in an iron or brass flask or frame suitable for the size and thickness of the mould to be made, and provided with a bottom and plunger, or follower, and the flask is filled with the moist clay powder on the top of the pattern. Then the plunger or follower is placed in position, and the whole brought under a powerful press, and subjected to a slowly-applied but high pressure, say about 300 to 400 lbs. to the square inch, thereby packing and pressing the loose powder into a compact and solid block. After sufficient pressure is applied it is allowed to stand under the press for a few minutes, so that the surplus moisture or water in the slip may be absorbed by the more dry clay powder. The purpose of the slip is to unite the loose particles of the clay powder in direct contact with the pattern to a fine and homogeneous mass. The flask may then be removed from the press and the bottom taken off; this done, the pattern is easily taken out, and a mould will be found as perfect and smooth as if made of wax or gypsum. If a mould is to be made consisting of two or more parts, the first part made is coated on the surface coming in contact with the surface of the next part, to be made with a slight coat of collodion or thin shellac varnish, so as to make a partition between the clay surfaces, and they may be separated without difficulty. When the mould is completed it may be taken out of the flask or frame and handled and carried without danger of breaking. The moulds made are rendered dry by exposure to the influence of air or a gentle heat. When most of the moisture is evaporated, the moulds are placed into furnaces similar to those used for burning pottery, and the heat gradually raised until the moulds are red hot, which will burn them about as hard as a soft brick or clay-stone. When cooled off they are ready for casting. As it is necessary to keep these moulds in the same shape as when first made, and whereas articles made of clay are very liable to warp during the process of drying and burning, unless it is done with great care and waste of time, for the prevention of these evils it is found best to use to one part of clay powder made of fresh or new clay, another half of clay powder made of clay which has been previously burnt, or of old clay moulds which have been used for casting; the compound of these two different kinds of clay powder is very beneficial, as it prevents the warping of the moulds, even if they are of a considerably large size.

Fig. 2998 is a horizontal section of an apparatus; Fig. 2999 is a longitudinal section thereof, with part of the revolving wheel in elevation, part of it in section, and part entirely removed; Fig. 3000 is a vertical transverse section, the stationary parts being represented in the plane underneath by the line x, x, and the rotary mould-wheel in the plane of y, y, Fig. 2999; Fig. 3001 is a section of a part of the apparatus on a larger scale, illustrating a mode of withdrawing air and gas from the moulds prior to the injection of the metal.

A, A, represent various parts of the stationary frame B is a wheel or cylinder attached to a shaft C, which is rotated by gearing D, E, or other means: F, F, are mould-plates hinged in pairs to the periphery of the wheel, and so constructed that each pair will join, when closed, a matrix to produce the article which it is desired to cast: f, f, represent pins employed to aid in the detachment and ejection of the casting from the moulds, as previously explained. The inner ends of the said pins are flush with the inner surface of the moulds when the latter are closed. The outer faces of the hinged mould-plates are furnished with friction rollers G which bear against the housings H, so as to hold the moulds in their closed condition to receive the metal; h, h, represent recesses in the housings permitting the moulds to be opened by the springs I, I, when the castings are to be discharged.

These recesses begin with abrupt shoulders h^1 to permit the moulds to open suddenly, and converge so as to conduct the friction rollers gradually up to the parallel parts of the housings H. The reservoir for molten metal consists of a cylinder J provided with a piston K, which may be moved by a screw K^1, or by a lever, in order to force the metal out through the detachable thimble or nozzle L. A funnel *j* may be formed upon or employed in connection with the reservoir J when it is to be used in a horizontal position. The nozzle L passes into a mouthpiece or guard-plate M, which serves to close the gates of the moulds, and is rigidly attached to or forms a part of the bed N, which supports the cylinder J. The bed N is adapted to slide, and is held up to its work by a screw O and spring P. Under the ordinary working of the machine the gates will be tightly closed, so as to prevent any escape of metal from the moulds until it is firmly set; but in the event of a fragment of metal or other matter passing between the periphery of the wheel and the guard-plate M, the latter will yield, and thus avoid injury to the apparatus; R, R, represent the tapering partitions between the gates F^1 of the moulds F. The said partitions converge to edges, so as to cause but momentary obstruction in passing the nozzle L, and to impart a funnel shape to the gates or sprues.

3001.

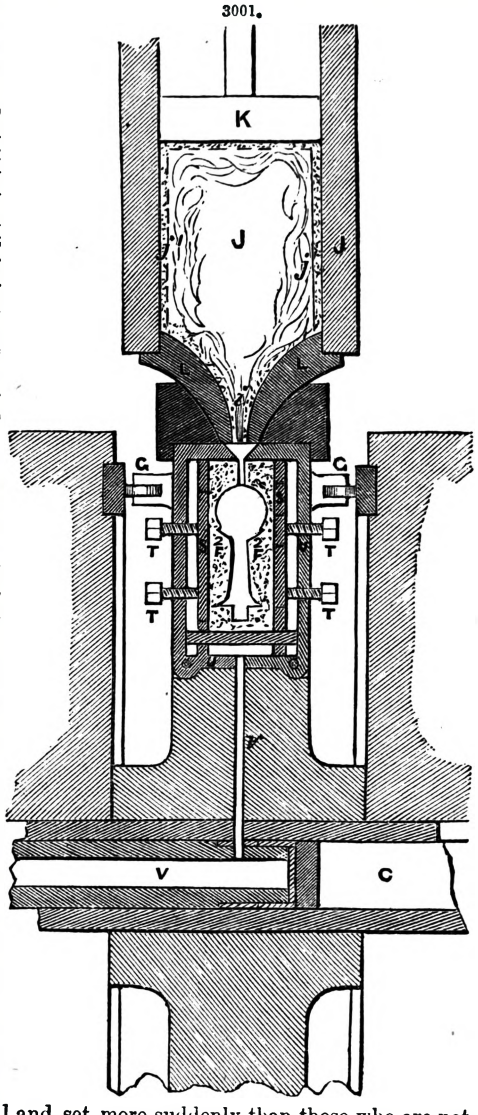

The reservoir may be used in vertical position, as shown in Fig. 3001, and the funnel *j*, Fig. 2999, dispensed with, the metal being introduced into the open upper end of the cylinder, and the piston K afterwards placed upon it. j^1 represents the detachable non-conducting lining with which the inner surface of the reservoir is coated prior to each time of charging it with molten metal. F^2, F^2, represent moulds of the clay composition hereinbefore described; S, S, plates, and T, T, set screws by which the said moulds are firmly pressed and held together so as to resist the pressure of the entering metal, and prevent any opening of the joints. The plates S, S, may serve as the mould-flask, or they may be placed within a separate flask, and the latter enclosed in an outer air-tight casing or box U from which air and gas are withdrawn prior to or during the casting operation through pipes *v*, V, by means of a powerful air-pump, or for some classes of work the air-tight box and exhausting process may be dispensed with. For some kinds of casting, especially in iron and steel, moulds of iron and steel may be used with good success, but it is very essential that such metal moulds be so arranged that the fluid iron or steel is injected as directly as possible, and without first passing through too long a space of *gates* or sprues before the mould is reached by the metal. The reason why this should be done is this,—if fluid refractory metals come in direct contact with other metal surfaces they chill and set more suddenly than those who are not acquainted with this property have an idea of, even if those surfaces should have been previously made red hot. The consequence of this action is that the casting will show streaks and an uneven surface; but if the moulds are filled directly from the injecting cylinder (avoiding the passing of the fluid metal over a long distance in the gates), and the strong pressure is brought to bear on the metal in the filled mould instantaneously before it has had time to form a hard skin or surface, a very good and sharp impression is thus obtained. Iron and steel moulds used in this manner ought to be oxidized or rusted on the surface to a certain extent. These rusted or oxidized surfaces are somewhat non-conductile, and serve also to prevent the adhering of the injected metal to the moulds.

When the suitable moulds are made they are put in a metal box or flask, and an iron follower employed to press and hold the moulds firmly together by means of the set screws, as illustrated in Fig. 3001, just as the style of the machine may be, so as to resist the pressure of the injected metal without parting at the joints. When this is done the cylinder or injecting vessel J is provided on the inside with a non-conducting lining.

The lining of the cylinder is performed as follows;—Take some fine fire-proof clay or *kaolin* free from sand grit, and thoroughly blend the same with about one-half the quantity of good plumbago; then mix with water so as to form a paste. The cylinder is heated to about 200° of Fahrenheit, and with a brush the aforesaid paste is applied on the inside of the cylinder to a uniform thickness of about $\frac{1}{8}$ of an inch, the heat of the iron cylinder drying the paste as applied. This done, the cylinder is further heated to evaporate all moisture from the lining, and is then ready for further

operation. The surface of the piston K coming in contact with the fluid metal is coated in a similar manner. This lining of the cylinder serves several useful purposes; it serves to pack the space or joint between the cylinder and piston, and prevents the intrusion of the metal between the two, which intrusion would certainly and rapidly clog their parts and stop the operation, as the heat of the fluid metal will at once expand the cylinder more than the piston, and admit the metal between them at the joint. It should be explained that the plunger or piston K fits the cylinder, and is therefore larger than the internal diameter of the lining, and that at every operation the cylinder must be relined or recoated, as such lining is detached from the cylinder J, and pushed in advance of the piston K at every forward movement of the latter, the effect of which is to close the joint, and prevent the intrusion of the metal between the piston and side of the cylinder, as above stated. No matter how high the pressure is on the fluid metal, not a drop can leak out, the detached lining will pack the joint so much the more closely. The importance of this detachable lining can scarcely be over-estimated, since it forms by its non-conducting property the only practicable means for preventing the chilling or rapid setting, and also the adhering of the molten metal which would arrest the forward motion of the piston, and preclude any successful operation. Those acquainted with the nature of refractory metals know how rapidly they chill and set if they come in contact with another metal surface, even if said surface is made red hot, and it requires several minutes' time to fill the cylinder and perform the operation of injecting. This lining serves also to prevent the direct contact of the fluid metal with the surface of the cylinder, which would soon spoil the cylinder by the excessive heat of a mass of molten metal, even if the other aforesaid advantages were not of such great importance. The nozzle or thimble L (if made of metal) is lined in the same manner as the cylinder itself. The discharge orifice of the said nozzle is then stopped with a clay plug or tamp *l* capable of resisting a pressure of 6 or 8 lbs. to the square inch. The office of the plug or tamp *l* is to prevent the gradual passage of the metal into the moulds. All being in readiness, and the cylinder J charged with molten metal in quantity somewhat in excess of the capacity of the moulds to be filled and placed in proper position, a pressure of from 30 to 60 lbs. to the square inch, and sometimes more, may be applied to the metal by either a screw, lever, or other means; but experience will soon indicate to the practical operator the proper amount of pressure for various kinds of casting. When pressure is applied to the metal the plug will yield and pass along in the main gate, giving the metal free passage into the moulds. When the casting is performed and the metal is set, the cylinder is readily detached by breaking the metal in the gate at the junction of the thimble and the moulds. This ought to be done immediately after the casting is done, and before the metal in the gate has acquired its full strength by cooling off. The remaining head of metal in the cylinder is easily removed after cooling.

The operation of the rotary apparatus, represented in Figs. 2998 to 3000, may be described as follows;—Any number of the reservoirs J, K, L, may be prepared for use by coating their inner surfaces with a suitable non-conducting paste, and filling them with molten metal, the nozzle L being closed with a clay plug to prevent the escape of metal. The cylinder J being placed in the position shown in the drawings, the wheel B is set in motion, and then pressure is applied to the piston K so as to cause a continuous discharge of molten metal through the nozzle L. The small clay plug or stopper in the nozzle being driven out with the first discharge of metal may pass into one of the moulds and cause the production of a single imperfect casting, but after this a continuous jet of pure molten metal is kept up. The metal is thus injected and compressed into each mould as the rapid rotation of the wheel carries it in front of the nozzle. The guard-plate M prevents the escape of any of the metal until it has had time to become set, and as the bearing rollers G of each mould reach the shoulders h^1 of the recesses *h*, the springs I cause the mould-plates to separate instantaneously with a concussion which discharges the casting from the mould, or if the jar should be insufficient the driving of the pins *f* inwards through the mould-plates ensures the detachment of the casting.

The continued rotation of the wheel carries the rollers up the converging faces of the recesses *h* until they pass between the parallel faces of the housings H so as to effect the tight reclosure of the moulds in readiness for filling. For casting articles of larger weight than a quarter of a pound the motion of the wheel may preferably be intermittent instead of continuous. Where, from the character or size of the castings to be produced, the particular metal or alloy used therein, or other circumstances, it is found desirable to employ moulds of the clay composition in connection with the rotary apparatus, as illustrated in Fig. 3001, the said composition moulds may be arranged and secured in the several flasks or mould-chambers completely around the periphery of the wheel before the casting operation begins. The injecting reservoir J being then charged and set in position, and pressure applied to the piston K, a number of large compressed castings may be produced by a single revolution of the wheel, or in some cases it will be practicable to employ the composition moulds in continuous or repeated operation in the manner first described. While selecting to illustrate various parts of the invention the preferred styles or types thereof, it is not proposed to restrict it thereto so long as the same results are obtained by means substantially equivalent. For an example, the pressure of steam or condensed air may be applied to act on the piston, or steam or condensed air may even be used to exercise direct pressure on the fluid metal if the cylinder is in vertical position and the end of the cylinder closed, although practical experience has proved that the mechanical pressure is the most reliable and least complicated. It is also proposed in some cases to use a form of double flask, or a flask with two or more chambers connected by suitable gates, so that the molten metal may be placed in one and the moulds in the other or others, and the compression casting can be performed by forcing the metal out of the first chamber or the reservoir into the moulds, which are arranged and secured in the other chambers.

Another modification consists in the employment of a horizontal reservoir with its discharge aperture at or near the highest part, as the metal need not entirely fill the reservoir; when the piston is retracted no metal will be discharged until the piston moves, even if the plug or tamp be dispensed with, but to prevent cooling and oxidation it is preferable to use the plug in this case

also. As a substitute for the clay plug or tamp a sliding rod or other form of valve may be employed, being adjusted to resist any pressure below a certain degree, and where the pressure exceeds that degree to yield and open the way between the reservoir and moulds.

It will be apparent that some of the principal parts of the invention, as for example the injecting process and apparatus, the material for the moulds, the manner of securing the moulds within the flask, and the exhausting process are not in any manner restricted in their use to the rotary apparatus which has been more particularly described in connection with Figs. 2998 to 3000, but may be used equally well with stationary or detached flasks. In practice it is rarely found necessary to employ the atmospheric exhaustion in connection with the compression of the metal, but its use is found advantageous in cases where it is especially necessary to produce castings of the most compact and solid character with entire freedom from blow-holes throughout. In these cases it is preferable to use the stationary rather than the rotary moulds, so that the exhaustion may be effected through a simple pipe connected to the air-tight chest within which the flask is enclosed. When the injecting reservoir is placed in a vertical position the use of a thimble L separate from the reservoir J, facilitates the removal of the reservoir by slipping it off vertically when the metal has become set. The superincumbent mass of metal remaining in the reservoir might render this difficult or impossible if the lower end of the reservoir itself were contracted or formed with an inwardly projecting flange or shoulder. If said thimble is made of iron or other metal it ought to be divided longitudinally into two parts, so that the same may be readily detached from the metal in the central gate, and the head left in the cylinder after casting. Continued practice has proved that the best manner of making said thimble is to form or make it by pressing moist clay into a suitable mould, and after forming to burn it hard in the manner that brick or pottery is burnt, and to use a new thimble at every operation of casting. Such mineral thimbles are strong enough, cheaply made, and easily detached by breaking them in pieces after casting. Practical founders know that if a mould could be used of a material more dense than sand or sand loam, a more perfect and sharp mould could be made, and there would not be so great liability of the sharp lines of the mould being washed by the inflowing metal; but they are also aware that if a mould is made so dense by ramming and stamping, or by the use of dense material, the gases generated and the air in the moulds will not be ejected by the mere pressure obtained by the weight of the metal itself; the consequence is that the metal is blown out of the mould and the casting is useless. The employment of the compression process applied to refractory metals, just described, enables the use of moulds of great density and of materials which will take a very fine and sharp impression of the patterns by great pressure applied to the material formed into moulds. By providing separate injecting vessels for the reception of the molten metal previous to its introduction into the mould, and having a high pressure to bear on the fluid metal in the very act of its rapid filling of the moulds, the elimination of the gases generated and the air in the moulds is compelled to take place through very fine pores and the small orifices made at the joints of the moulds; and as the pressure is kept on the metal until it is well set and solid, such a thing as blowing will never, or very seldom take place, but the metal is compelled to fill every cavity of the mould, producing a perfect, sharply defined, and smooth surface.

Moulds made of clay composition are especially well adapted to be used with this compressing casting apparatus. Moulds to be used for another more simple method of casting metal under pressure, but applicable only to the casting of larger pieces of one face, are made in the same manner, only it is preferable to use instead of ordinary clay the clay composition used for black-lead crucibles or for good fire-tiles. The only necessary difference in the manner of forming the mould is as follows;—The iron box or frame is first filled with clay powder, and the pattern is then placed with face down. The reason for doing so is that the clay mould is left in the iron box and the bottom of the box is not removable, therefore the pattern must be placed on the top of the powder that it may be taken out after the impression is produced. The iron box or flask used for the clay mould ought to be of the outside size and shape of the die or mould to be cast in metal, and the bottom ought to be provided with a hole or slot for the purpose presently to be seen. When the pattern is removed the clay mould is made dry; after drying and while still in the iron box it is placed in a muffle furnace, and the heat gradually raised until the mould and iron box are brought to a temperature nearly equal to that of the metal to be cast in it; while this is done the metal to be used is melted in another furnace. Then the clay mould is taken out of the furnace and filled with so much of the fluid metal as is necessary to make the articles, allowing a small surplus to be acted on by the follower. The surplus of metal is kept from overflowing by an iron collar or frame which extends above the clay moulds. When so far filled the follower is put on top of the fluid metal and then the whole is placed under a screw or lever press. During the time required to perform the filling of the mould and placing under the press, the fluid metal becomes mushy, or semi-fluid, and if pressure is applied the metal will take a perfectly sharp impression of the mould. When the whole is cooled off, the casting is removed out of the iron collar or box by driving something through the hole left for that purpose in the bottom of the box. The alloys of copper and tin are most favourable for this process of casting, but it may also be employed for other refractory metals and metal compositions with good success. The use of clay in this method of producing moulds for dies and other single-faced castings greatly reduces the care and skill required and the risk of loss involved in making such castings. In forming metal moulds with metal patterns, there is great danger of the injury or destruction of the pattern to be copied by the molten metal adhering to it. It is well known that moulds have been made of clay when in a plastic state for different purposes, and also that clay mixed with sand is employed for making moulds to be used for casting large bells and other heavy bronze and brass castings so as to give strength to the sand that it may resist the pressure of a great mass of metal. Now, those acquainted with the art of forming moulds and other things of plastic clay, know that it is very difficult and almost impossible to press plastic clay into deep cavities of a pattern, especially if the pattern is made of metal or other material of great density, because the air will always be more or less confined

in the cavities and prevent the admission of the clay to produce a sharp and perfect impression. Another disadvantage, and that not the least, is that clay used in the plastic kneadable state will shrink very much, thereby reducing the size and changing the form of the article to be moulded; further, an article formed or moulded of plastic clay is very liable to warp and get out of shape by handling, and during the process of drying. But by using a moist clay powder and forming it into a compact mass by high pressure, those difficulties are entirely obviated; by using first a coating of slip applied over the pattern with a brush, the clay is brought into every cavity of the pattern at the commencement. Then the moist clay powder, being first in a loose state, attaining its strength and hardness gradually by the pressure slowly applied, permits of the easy escape of the air from the cavities of the pattern and throughout the whole mass, and produces a perfect and sharp impression. Further, by using moist clay powder, and making it a compact block by means of high pressure, the mould is, when formed comparatively to a mould made of plastic clay, in a greatly advanced state of dryness, may be handled and carried about without getting out of shape, and as it contains not one-fourth part as much water as plastic clay it is almost entirely relieved from shrinkage and adapted to retain the shape and size first given in making. Further, by mixing with fresh new clay powder one-half of powder made of burnt clay the mould is relieved from liability to warp and crack during the process of drying and burning. The application of slip made of clay as a facing closes the pores and unites the clay powder into a fine and plastic mass where it comes in direct contact with the pattern. The slip is rendered quickly plastic by absorption of the surplus of water it contains by the comparatively dry clay powder in the rear. Now, as the application of slowly applied pressure is believed to be new in this connection, it is proper to explain its importance. If an attempt is made to form the loose moist clay powder into a compact and solid mass, as a good mould must be by means of stamping and ramming as it is done in the ordinary way of moulding, it would naturally take a great deal of labour, but after removing the pattern the mould would be of insufficient and unequal compactness and imperfect impression; and further, when the mould was removed from the flask it would not properly hold together in burning, but fall to pieces as if the mould had been made of a number of layers of clay. If high pressure should be applied by means of machinery in a sudden manner, or with a momentum, the same results would occur. But, if pressure is applied slowly and gradually, the loose particles of the clay powder are gradually and firmly united into a solid compact mass of uniform density entering perfectly and sharply into every cavity of the pattern. The labour required to form a mould in the manner described is but little more than in forming a mould in the ordinary way of moulding.

Brass moulding is carried on by means of earthen or sand moulds. The formation of sand moulds is by no means so simple an affair as it would at first sight appear to be, as it requires long practical experience to overcome the disadvantages attendant upon the material used. The moulds must be sufficiently strong to withstand the action of the fluid metal perfectly, and, at the same time, must be so far pervious to the air as to permit of the egress of the gases formed by the action of the metal on the sand. If the material were perfectly air-tight, then damage would ensue from the pressure arising from the rapidity of the generation of the gases, which would spoil the effect of the casting, and probably do serious injury to the operator. If the gases are locked up within the mould, the general result is what moulders term a *blown* casting; that is, its surface becomes filled with bubbles of air, rendering its texture porous and weak, besides injuring its appearance.

Plaster of Paris is often used for a number of the more fusible metals. This material, however, will not answer for the more refractory ones, as the heat causes it to crumble away and lose its shape. Sand, mixed with clay or loam, possesses advantages not to be found in gypsum, and is consequently used in place of it, for brass and other alloys. In the formation of brass moulds, old damp sand is principally used in preference to the fresh material, being much less adhesive, and allowing the patterns to leave the moulds easier and cleaner. Meal dust or flour is used for facing the moulds of small articles; but for larger works, powdered chalk, wood-ashes, and so on, are used, as being more economical. If particularly fine work is required, a *facing* of *charcoal* or *rottenstone* is applied. Another plan for giving a fine surface is to dry the moulds over a slow fire of *cork shavings*, or other carbonaceous substance, which deposits a fine thin coating of carbon. *This*, when good fine facing-sand is not to be obtained. As regards the proportions of sand and loam used in the formation of the moulds, it is to be remarked that the greater the quantity of the former material, the more easily will the gases escape, and the less likelihood is there of a failure of the casting; on the other hand, if the latter substance predominates, the impression of the pattern will be better, but a far greater liability of injury to the casting will be incurred from the impermeable nature of the moulding material. This, however, may be got over without the slightest risk, by well drying the mould prior to casting, as you would have to do were the mould entirely of loam.

For some works, where easily fusible metal is used, metallic moulds are adopted. Thus, where great quantities of one particular species of casting is required, the metallic mould is cheaper, easier of management, and possesses the advantage of producing any number of exactly similar copies. The simplest example which we can adduce is the casting of bullets. These are cast in moulds constructed like scissors, or pliers, the jaws or nipping portions being each hollowed out hemispherically, so that when closed a complete hollow sphere is formed, having a small aperture leading into the centre of the division line, by which the molten lead is poured in.

Pewter pots, inkstands, printing types, and various other articles, composed of the easily fusible metals, or their compounds, are moulded on the same principle. The pewterer generally uses brass moulds: they are heated previous to pouring in the metal. In order to cause the casting to leave the mould easier, as well as to give a finer face to the article, the mould is brushed thinly over with red ochre and white of an egg; in some cases, a thin film of oil is used instead. Many of the moulds for this purpose are extremely complex, and, being made in several pieces, they require great care in fitting. With these peculiar cases we have, at present, little to do and,

we therefore shall conclude with a few observations on the method of filling the moulds. The experienced find that the proper time for pouring the metal is indicated by the wasting of the zinc, which gives off a lambent flame from the surface of the melted metal. The moment this is observed, the crucible is to be removed from the fire, in order to avoid incurring a great waste of this volatile substance. The metal is then to be immediately poured. The best temperature for pouring is that at which it will take the sharpest impression and yet cool quickly. If the metal is very hot, and remains long in contact with the mould, what is called *sand-burning* takes place, and the face of the casting is injured. The founder, then, must rely on his own judgment as to what is the lowest heat at which good, sharp impressions will be produced. As a rule, the smallest and thinnest castings must be cast the first in a pouring, as the metal cools quickest in such cases, while the reverse holds good with regard to larger ones.

Complex objects, when inflammable, are occasionally moulded in brass, and some other of the fusible metals, by an extremely ingenious process; rendering what otherwise would be a difficult problem a comparatively easy matter. The mould, which it must be understood is to be composed of some inflammable material, is to be placed in the sand-flask, and the moulding sand filled in gradually until the box is filled up. When dry, the whole is placed in an oven sufficiently hot to reduce the mould to ashes, which are easily removed from their hollow, when the metal may be poured in. In this way small animals, birds, or vegetables may be cast with the greatest facility. The animal is to be placed in the empty moulding box, being held in the exact position required by suitable wires or strings, which may be burnt or removed previous to pouring in the metal.

Another mode which appears to be founded on the same principle, answers perfectly well when the original model is moulded in wax. The model is placed in the moulding box in the manner detailed in the last process, having an additional piece of wax to represent the runner for the metal. The composition here used for moulding is similar to that employed by statue founders in forming the cores for *statues*, *busts*, and so on, namely, two parts brick-dust to one of plaster of Paris. This is mixed with water, and poured in so as to surround the model well. The whole is then slowly dried, and when the mould is sufficiently hardened to withstand the effects of the molten wax, it is warmed, in order to liquefy and pour it out. When clear of the wax, the mould is dried and buried in sand, in order to sustain it against the action of the fluid metal.

We shall examine one or two cases which come more or less within the province of the engineer. One of these is the founding of bells, a subject of much interest, as works of this kind are often of very considerable magnitude, and demand the skilful attention of the engineer. Large bells are usually cast in loam moulds, being *swept* up, according to the founder's phraseology, by means of wooden or metal patterns, whose contour is an exact representation of the inner and outer surfaces of the intended bell. Sometimes, indeed, the whole exterior of the bell is moulded in wax, which serves as a model to form the impression in the sand, the wax being melted out previous to pouring in the metal. This plan is rarely pursued, and is only feasible when the casting is small. The inscriptions, ornaments, scrolls, and so on, usually found on bells, are put on the clay mould separately, being moulded in wax or clay, and stuck on while soft. The same plan is pursued with regard to the ears, or supporting lugs, by which the bell is hung.

Brass Guns are another important branch of this manufacture. They are moulded in a manner quite distinct from any other work of this nature. The exterior surface of the gun is produced by wrapping gaskin or soft rope round a tapered rod, of a length slightly greater than that of the gun. Upon this foundation of rope the moulding loam is then applied; the surface being turned to the exact shape and proportions of the gun. A long fire is used by the founder in this process, in order to dry the mould as he proceeds in its manufacture. When perfectly dry, the surface of the mould is black-washed over, and again covered with loam to a depth of 2 or 3 in. This exterior coat of loam is secured and strengthened by a number of iron bands, and the whole is well dried. The primary mould is now completely withdrawn from the outer shell, the formation of which renders it an easy matter, as the timber rod leaves the rope with great facility, when the latter may be withdrawn, and the clay covering picked out afterwards.

The trunnions of the gun are formed separately, and attached to the shell in the ordinary way. When finished, the moulds are sunk perpendicularly in a sand-pit, near a reverberatory furnace, a vertical runner being made, leading to each mould, which it enters near the bottom. A suitable channel communicates with the furnace containing the brass intended for the guns. The metal being introduced at the bottom of the mould, no air can possibly be detained by its entrance, as each mould is full open to the atmosphere at the top.

T. V. Morgan's apparatus, or machine for making large and small crucibles, is illustrated by Figs. 3002 to 3004. This important and peculiar mechanical arrangement consists in fitting the "former," or forming tool employed in the apparatus, Fig. 3002, so that in addition to being capable of an up-and-down movement, the former is free to be moved and adjusted horizontally as the crucible is being moulded, and according to the required size or thickness of the crucible; it also consists in the employment of a lever to prevent all vibration or movement of the former or shaper, when at its final position in the crucible.

The forming tool is fitted to a block free to be moved horizontally in a frame by means of a horizontally threaded rod, which takes into a corresponding female thread in the block; the ends of this rod work in fixed nuts on the frame, and one end is provided with a handle which is turned according as the former and its block are required to be moved. The frame before mentioned is free to move up and down in slots formed in two uprights, and its weight is counterbalanced. The bottom of the slots limits the distance to which the frame with the former can be lowered. When a crucible is to be made the frame is pulled down to cause the former to enter the plastic material, which is placed in a mould, on a revolving lathe, or *jigger*, as usual, and when the former reaches the bottom of its course, a catch on one of the uprights secures the frame in position. The threaded rod is then turned, to cause the former to move horizontally, and spread the plastic material against the side of the mould. Finally, the back end of a lever carried on the top of the frame,

and free to move backward by means of slot or otherwise, is inserted into a hole formed for the purpose, and its forward end is pressed down by hand, so that the lever bears forcibly upon the frame, and prevents all vibration or movement of the former. When the crucible is finished, the handle is turned to bring the former to the centre of the crucible, the lever is moved forward out of its hole, the catch released, and the frame raised up by a balance-weight. The operation is then repeated for the next crucible, and so on.

This invention further consists in the employment of a brake to stop the revolution of the lathe or *jigger*, when the driving belt is moved from the fast to the loose pulley of the lathe-shaft. This brake is preferably composed of a horizontal bar hinged behind the apparatus, while one end extends to the front of the apparatus, near to the attendant. The bar carries a block, and when the brake is to be applied, the attendant, by his foot or otherwise, moves the bar on its hinge, so as to cause the block to bear against a collar or other revolving portion of the lathe.

Fig. 3002 is a front elevation; Fig. 3003 a side elevation; and Fig. 3004 a section through the line A A of Fig. 3002, of an apparatus constructed according to Morgan's improvements. *a* is the former, or forming tool; it is fitted to a block *b*, which is, as before stated, free to be moved horizontally in a frame *c* by means of a horizontal threaded rod *d*, taking into a corresponding thread *e* in a nut b^1 in the block *b*; the ends of the rod *d* work in fixed nuts *f f*, on the frame *c*, and the right-hand end is provided with a handle *g*, which is turned according as the former *a* and block *b* are required to be moved. The frame *c* is free to move up and down in slots *h h*, formed in two uprights *i*, *j*, and its weight is counterbalanced by weights *k k*, on the end of chains or cords *l l*, passed over pulleys *m m*, and connected to the frame *c*. *n* is a catch on the upright *j*, to secure the frame *c* in position when the former *a* reaches its lowest position. *o* is the mould into which the plastic material is fed; this mould is carried on an ordinary lathe or jigger *p*, to which rotary motion is imparted as usual. When the frame *c* is caught by the catch *n*, and the mould is caused to rotate, the threaded rod *d* is turned by its handle *g*, so as to cause the former *a* to move horizontally, and spread the plastic material against the side of the mould *o* and when it has been moved to the required distance, which is regulated by a scale on the frame *c*, the back end of a lever *q* carried on the top of the frame *c* and free to move backward by means of a slot *r* is inserted into a hole *s* formed in an upright *t*, and its forward end is then pressed down by the attendant so that this lever bears forcibly upon the frame *c* and prevents vibration or movement of the former *a*. When the crucible is finished, the handle *g* is turned to bring the former *a* to the centre of the crucible, the lever *q* is moved forward out o its hole *s*, the catch *n* is released, the frame *c* is raised up, and the mould is removed in the ordinary manner; all being then ready for the next operation. *u* is a horizontal bar under the platform *v* and hinged at *w*, while its front end extends to the front of the apparatus. *x* is a block on the bar *u*, and *y* is a collar on the lathe-shaft. When it is required to stop the revolution of the lathe, the attendant moves the bar *u* on its hinge *w*, so as to bring the block *x* against the collar *y*. *z* is a horizontal bar or guide for the bar *u*.

3002.

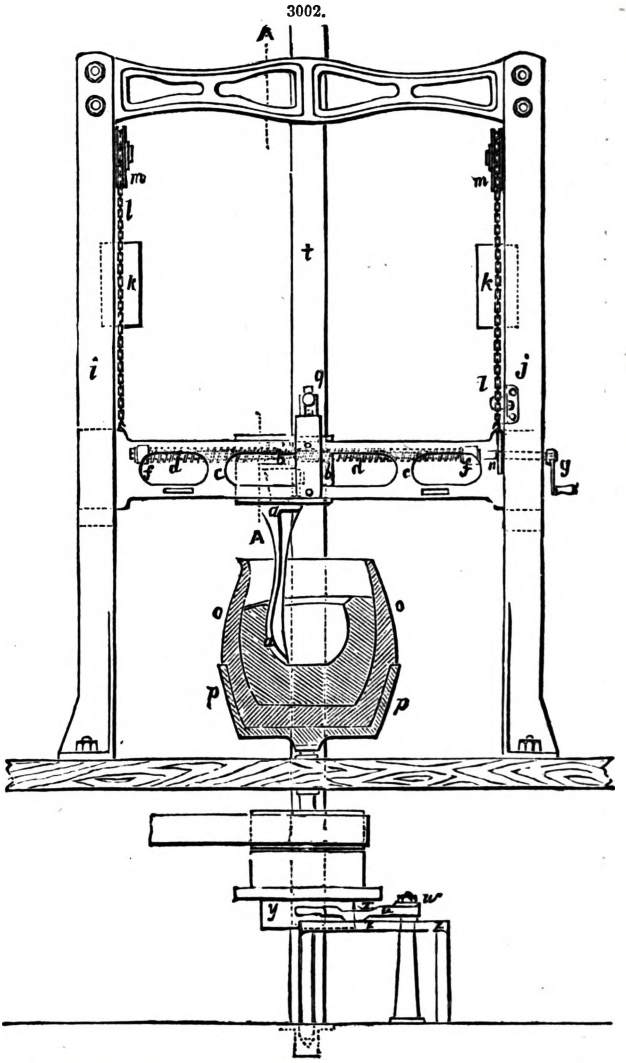

The Morgan steel crucible, Fig. 3005, so highly valued, is made of about 1 part fire-clay, and 2 of graphite or plumbago. This paste is worked to great perfection by the machine, Figs. 3002 to 3004. During the burning the Morgan crucible undergoes no change internally, as only the surface of the graphite burns.

Fig. 3006 is a section of a Morgan crucible, capacity 50 kilos., that is, a little over 100 lbs. English. The Plumbago Crucible Co., Battersea Works, London, designates this crucible No. 50.

A B = 11·1 in.; B C = 1·3 in.; E F = 8·0 in.; F G = ·9 in.; and *m n* = 1·4 in.

The crucibles, Figs. 3005 to 3012, are selected from among the vast variety of crucibles manu-

3003.

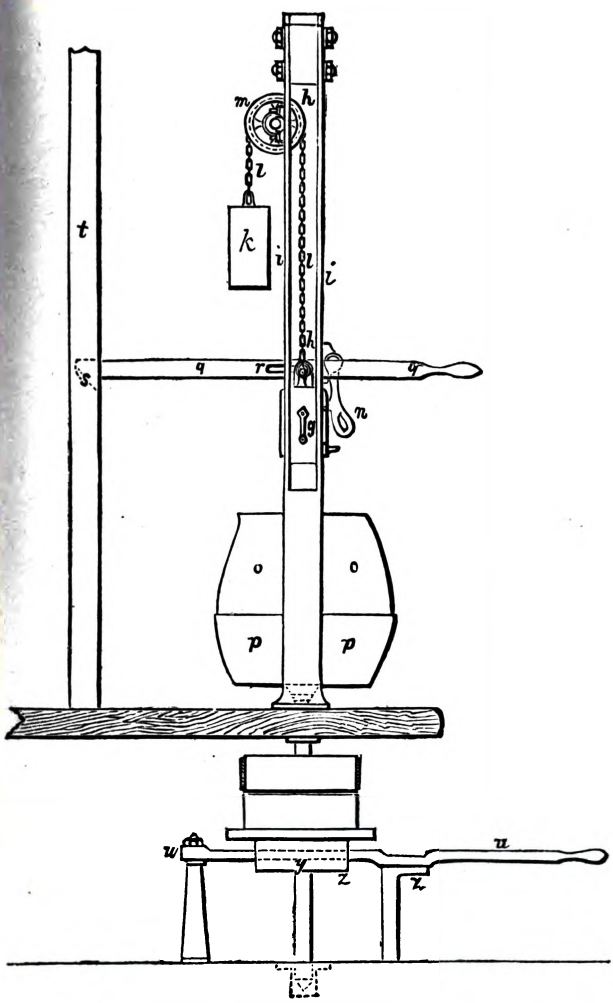

3004.

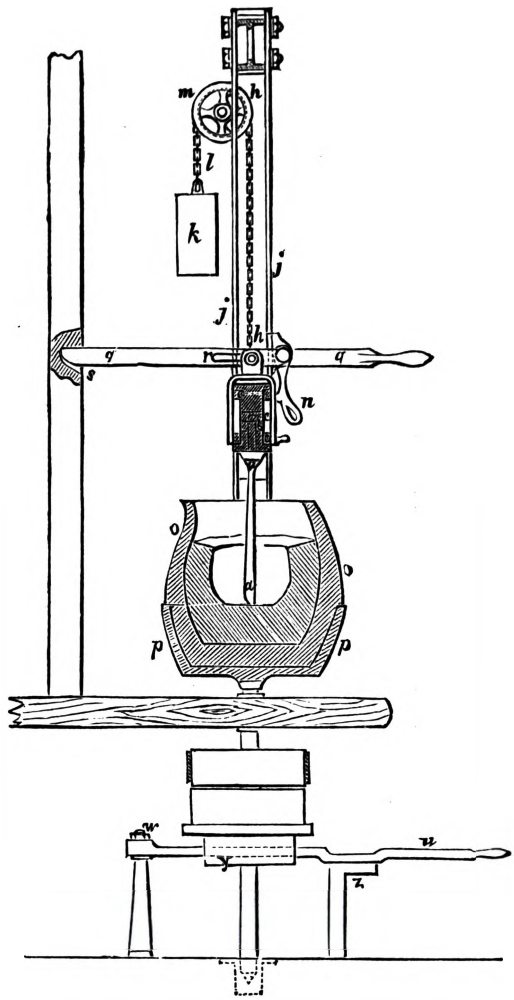

3005.

Plumbago crucible and cover for melting steel and malleable iron.

3006.

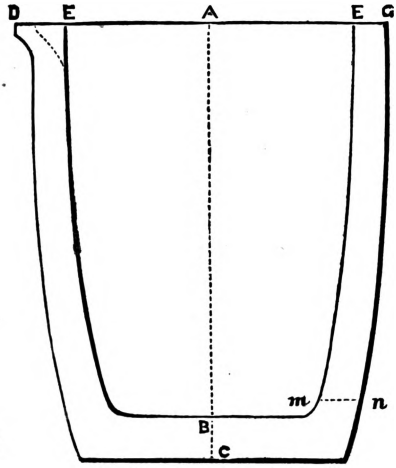

No. 50 crucible for melting gold, silver, brass, copper, and nickel. These melt on an average 40 pourings, and are made of any shape and size to hold from 1 lb. to 1000 lbs.

3007.

London clay crucible for refining gold.

3008.

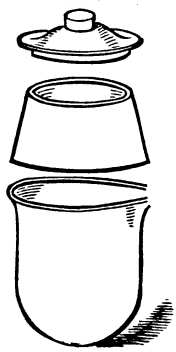

Crucible, cover, and whiffle for melting silver.

3009.

Scarifier

3010.

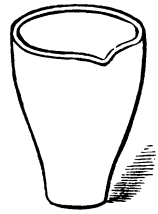

London clay crucible for refining gold.

3012.

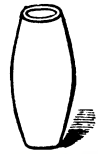

Skittle pot for refining jeweler's sweep.

3011.

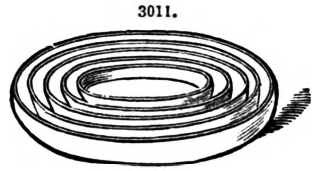

Roasting dishes.

factured at the Battersea Works. The crucibles of this company have been in most successful use for many years, and are now used exclusively by the English, Australian, and Indian mints; the French, Russian, and other Continental mints; the royal arsenals of Woolwich, Brest, and Toulon; and have been adopted by most of the large engineers, brass-founders, and refiners in England. Their great superiority consists in their capability of melting on an average forty pourings of the most difficult metals, and a still greater number of those of an ordinary character, some of them having actually reached the extraordinary number of ninety-six meltings. (See CRUCIBLES.)

These crucibles never crack; become heated much more rapidly than any other description, and require only one annealing—may be used any number of times without further trouble, change of temperature having no effect on them. Mons. C. Dierick, master of the French mint, writes;—"Each crucible runs from forty to sixty pourings, and can with safety be dipped in cold water when at a red heat, and used again immediately, as if it had not undergone any change of temperature." A large amount of time is daily saved at starting, other crucibles requiring to be annealed every morning before using, whilst these, although lasting a very considerable number of heats, *only* require to be annealed *once;* the *metal* is also fused much more rapidly, saving *time*, *fuel*, *labour*, and *waste;* the saving also of *metal* is very great, as to each worn crucible there adheres a certain amount of metal—the commoner the crucible the greater the absorption and adhesion. In this respect, comparing the Morgan plumbago with the common crucible, the saving of metal and fuel is equivalent to the cost of the plumbago crucible.

This company have introduced crucibles especially adapted for the following purposes, namely;—MALLEABLE IRON MELTING, the average working of which has proved to be about *seven days;* STEEL MELTING, which are found *to save nearly a ton and a half of fuel to every ton of steel fused;* and for ZINC MELTING, lasting much longer than the ordinary iron pots, and saving the great loss which arises from mixture with iron.

Crucibles have been in use for melting and refining metals from that distant point of time when man exchanged his stone hatchet and bone chisel for implements of bronze. The earliest melting pots were doubtless made of the plastic and infusible substance clay, and there is no reason to suppose that they differed essentially from the earthen crucibles now commonly used in our foundries.

As an instrument of scientific research, the crucible has held an important position for at least a thousand years. It was constantly used by the first alchemists, and may, indeed, be truly styled the cradle of experimental chemistry.

At the present time, crucibles of one form or another are extensively employed by the refiner of gold and silver, the brass-founder, the melter of copper, zinc, and malleable iron, the manufacturer of cast steel, the assayer, and the practical chemist. They are made in many different shapes and sizes, and of many materials, according to the purposes for which they are intended. For certain chemical experiments, requiring high temperature, vessels of platinum, porcelain, and lime, are adopted; but for ordinary metallurgical operations clay crucibles and plumbago crucibles are exclusively employed. We, in this place, confine our remarks to these two important classes of crucibles. On examining a clay or plumbago crucible it seems to be merely a rough specimen of pottery that might be easily imitated; yet the successful makers of crucibles are so few that they might almost be counted on the fingers of two hands. When we take into consideration the qualities which are required in a crucible to enable it to pass victoriously through the ordeal by fire, the paucity of good makers becomes intelligible. The crucible should resist a high temperature without fusing or softening in a sensible degree. It should not be liable to break or crumble when grasped with the tongs, and it ought to be but little affected by the chemical action of the ashes of the fuel. Again, it may be required to withstand the corrosion and permeation of such matters as melted oxide of lead. In some cases crucibles should resist very sudden and great alternations of temperature, so that they may be plunged while cold into a furnace nearly white hot without cracking. In other cases they are merely required to resist a high temperature after having been gradually heated. Some crucibles are specially remarkable for one quality, and others for another, so that in selecting them the conditions to which they will be exposed must be kept in view.

The writer of this article, being an experienced metal-worker, speaks, for the benefit of others, without reserve; he knows from experience that the crucibles which present the finest combination of good qualities are those of the Battersea Plumbago Crucible Company. They support, even when of the largest size, the greatest and most sudden alterations of temperature without cracking; they can be used repeatedly, and their inner surface can be made so smooth that there is no fear of the particles of metal hanging about the sides. Their first cost is necessarily high, as plumbago is an expensive raw material; but the fact that they may be used for a great number of meltings makes them, in reality, cheaper than the ordinary clay pots. As fire-clay contracts considerably when exposed to a high temperature it cannot be used alone for large crucibles. The so-called clay crucibles are made of a mixture of the plaster clay with some other substance, such as highly-burnt fire-clay, silica, or coke, which counteracts in a measure the evil done to contraction, and so lessens the tendency of the vessels to crack. The large Stourbridge clay crucibles, so extensively employed by the brass-founders of Birmingham, contain both burnt clay and coke. The Cornish and Hessian crucibles are made of peculiar kinds of clay in admixture with sand. The great superiority of the plumbago crucibles over these can be easily accounted for by the fact that graphite or plumbago is the most impressible of all substances known, and at the same time a material that can be thoroughly incorporated with the clay without impairing its plasticity.

With respect to fire-clay, W. H. Stephenson, writing in the Transactions of the S. of E., observes;—Among the various deposits which have succeeded the formation of the primitive rocks upon the surface of the globe, there are certain earthy strata of very considerable extent composed chiefly of silica and alumina, partly in combination, and partly in mere mechanical mixture with other less prominent and essential ingredients. These strata are characterized by the very minute

state of division of their particles, and their want of firm connection or solidity. It is to this peculiar structure that the most valuable property of clay must be ascribed—that is, its plasticity, or the property of forming dough with water, sufficiently soft to take the most delicate impression from a mould, and so deficient in elasticity that even the slightest indentation is lasting and persistent.

By far the greater number of clays are so intermingled with substances foreign to them in their original localities, or have been primarily derived from such compound species of rock, or, lastly, have been so very far removed by the agency of water from the sources of their different constituents, that it is next to impossible to trace back the course of their formation to its very commencement; although the clays may be viewed in general as the remains of certain rocks which have been decomposed by various agents, chiefly atmospheric, which have, in a word, been weathered; yet there are few cases in which the production of clay has occurred in the immediate locality of the rock whence it is derived, and in such a simple manner as to enable its origin to be traced in all particulars, and established indubitably by chemical facts.

The most prominent physical properties of clay are its plasticity and behaviour when exposed to heat. By simple drying, at a temperature far below red heat, its particles collapse, the primary pores become contracted, and a very much more dense mass is obtained, which becomes so hard that it will no longer take impressions, although it is still sufficiently soft to be cut with a knife, and when treated with water is again converted into clay with the ordinary properties.

Exposed to the most intense heat that can be artificially produced, clay refuses to become liquid, and acquires at most a slight degree of flexibility. Its particles then cohere so strongly together that the burnt mass is hard and sonorous, although still porous enough to absorb water with avidity. Although it no longer falls to pieces, but retains its connected form, it will easily be conceived that the nature of clay must be very much modified by an admixture of foreign matters possessing other properties. These foreign matters may either be constituted of undecomposed detritus of the rocks from which the clay itself derives its origin, or of others which do not belong to the class of substances which yield clay by decomposition. The character of these foreign admixtures causes great variation in the nature of the different clays, and gives rise to the various denominations by which they are known. The ingredients which most affect the quality of the clay are sand, iron, lime, and magnesia.

The plasticity of clay diminishes with the amount of any one of these substances which it contains, as they are not plastic.

The quality is affected in the most marked manner by sand, somewhat less by lime, and very little by oxide of iron. When clay contains iron and lime, the action of heat upon it is very different: the silica, alumina, lime, and iron then form together a mixture similar to that employed in the manufacture of bottle glass, which melts in the fire with more or less ease, according as it contains much or little of the two latter ingredients. Magnesia exerts less influence upon the character of the clay; the more quartz and silica enter into the composition of the clay, the less easy will it be of fusion, and an excess of iron or lime can be corrected by a large quantity of this ingredient.

Fire-clay is commonly found in the coal-measures, at a great depth from the surface, but it not unfrequently happens that it lies on the top. Stephenson's experience was with clay at some considerable depth, and lying (at Throckley, Newcastle-upon-Tyne) immediately underneath the coal formation; its thickness varies according to circumstances, in some places 3 ft., and in others reduced to 18 in. As a rule, it is very strong and hard, and cannot be worked to advantage without the aid of gunpowder. It would be needless to recapitulate the ordinary working of a coal mine; but suffice it that the clay, on being raised to the surface, is laid out in long parallel heaps, say 20 ft. high, being 20 ft. wide at the bottom, and tapering to 5 ft. at the top. A series of ridges is thus formed, purposely, however, in order to collect as much rain and snow as possible, which, combined with the direct action of the atmosphere, soon reduces that which was at one time hard and retentive, to a soft, comparatively plastic state. Difference of opinion exists among manufacturers as to the policy of adopting this system, inasmuch as to carry it out fully a very large capital is necessary, and which for the time being lies dormant.

The sole advantage accruing in keeping so large a stock is, that it is more easily pulverized and reduced to powder, thereby causing a considerable saving in engine-power, labour, and expense. To carry out this method to its fullest extent, no clay ought to be used until it has been exposed to the action of the elements for at least two years. After the clay is brought to the works, the first process is that of grinding; the most approved plan is that of two large stones, say 10 ft. in diameter and 20 in. wide, hooped all round with iron, and revolving slowly on a cast-iron pan, or bed-plate, which in some works is also made to revolve very slowly the contrary way to the stones. The rough clay from the pit being conveniently placed for the workman, is cast under the edge stones, when it is ground to a coarse powder, which falls through an open grating in the centre of the bed-plate, whence it is lifted in the sifting cylinder by an endless chain of buckets. The clay, as it passes down the cylinder, is separated into two parcels; the coarse, or that which is too large to admit of its being passed through the meshes of the cylinder, is returned by a long wooden spout to the mill, where it a second time is ground, whilst the fine particles are received into an endless belt composed of glazed sack-cloth, and conveyed into the mixing pan, or pug-mill.

Some manufacturers prefer allowing the pugged clay to lie and *sweat* for a few days in a dark place, thereby giving greater ease and facility in working, the clay being rendered of a more plastic nature by the delay. Others remove it immediately from the pug-mill to be moulded into bricks, retorts, and so on.

Brick moulds are made of various materials, some of brass, cast in four pieces and riveted together, others of sheet iron cased with wood in the two longest sides. Iron moulds are *sanded*, but not wetted. Copper moulds are an improvement on the iron, as they require neither sanding nor wetting, and do not rust; they, however, are expensive, and do not last long, as the edges wear down very fast.

The cost of moulding bricks bears so small a proportion to the total cost, that it is questionable whether the application of machinery for this purpose in small works would effect any ultimate saving; numerous inventions have been patented, but few of them can be said to have proved successful.

The moulding operation in the ordinary brick-works is simpler than is the case with any other kind of clay ware.

The workman is supplied with a stock of clay (from the pug-mill) by his side, a table or bench before him, and two boys or helpers. The mould is larger in proportion than the finished brick, owing to the contraction of the clay in drying and burning; this, of course, varies under different circumstances, the tougher and finer the clay the greater the contraction, and *vice versâ*; in general, 1 in. to the foot is the calculation for contraction, and the moulds must be made accordingly.

The usual size of a brick is 9 in. long, 4½ in. broad, and 2½ in. thick.

The mould itself only makes the four narrow sides of the brick, the one broad surface being produced by the table which supports the mould, the other by a straight piece of wood, with which the workman removes away the excess of clay, by drawing it straight along the upper edge of the mould. To prevent the clay adhering to the mould, it is from time to time damped with water, which causes the moulded brick to separate from the mould without bending or loss of time. The operation is conducted as follows;—The workman throws a lump of clay with great force into the mould before him; the mass, which has become flattened by the shock, is forced into the corners by one or two rapid strokes with the hand, and that which projects beyond the mould is taken away with the flat board. By a sudden and peculiar twist of both hands, the workman deposits the brick from the mould on to a thin board previously placed before him for the purpose; one of the boys in attendance immediately places another similar board on the top of the newly-made brick, and thus carries it away between these two boards. Meanwhile, another brick is made as described, and thus the process continues during the hours of labour. The bricks are placed in long rows edgeways on the dry flats, a space equal to the thickness of the board, say ½ in., being left between each brick, in order to give vent to the steam generated in drying.

The drying sheds or flats consist of long floors, say 90 ft. by 30 ft., with flues running the whole extent of the building. It is desirable not to have the length of these flues more than, say, 40 ft., in order to ensure a good draught without any additional coals being used.

In most manufactories these drying flats are so constructed that there is ample room or accommodation for two days' work; in this case the moulders are never stopped, and are not required to remove their tables or benches from place to place. From thirty-six to forty-eight hours is calculated quite sufficient for drying bricks; so that while the moulder and his boys are depositing bricks on one part of the flat a gang of men and boys are engaged in clearing away the bricks from another part.

The number of bricks which a workman can mould in a day of ten hours is always considerable, but depends much upon the ability and strength of the moulder. With clay in good order a skilled workman can make 2000 to 2500 marketable bricks in a day.

It is clear that the relative merits and value of fire-bricks depend upon their fire-resisting qualities, and hence depend upon the proportion of silica they contain.

In an analysis of several kinds of Newcastle clay, Dr. Richardson found—

Nos.	1.	2.	3.	4.	5.	6.	7.
Silica	51·10	47·35	48·55	51·11	71·28	83·29	69·25
Alumina	31·35	29·50	30·25	30·40	17·75	8·10	17·90
Oxide of iron	4·63	9·13	4·06	4·91	2·43	1·88	2·97
Lime	1·46	1·34	1·66	1·76			
Magnesia	1·54	0·71	1·91	trace	2·30	2·99	1·30
Water and organic matter	10·47	12·01	10·67	12·29	6·24	3·64	7·58

whilst the amount of silica in No. 6 is to the total amount of the bases as 100 : 16, in No. 2 it is as 100 : 85. These clays are mixed in different proportions, according to the object of the manufacturer.

When, therefore, it is desirable to procure a first class article, a chemical analysis, although it cannot supersede an actual trial, may be of the greatest service, as the clays seldom or never come up to what is required of them, and only acquire the requisite properties by certain additions, and the choice of these additions must, in the first instance, be guided by the results of the chemical analysis; such additions are absolutely necessary, as fire-clay must not only be infusible in the fire, but must likewise not be subject to crack and fly. These properties are most important. The chief cause of the cracking, or the contraction of the clay, must therefore be lessened by the addition of substances which do not shrink themselves, and, on the other hand, do not impair the refractory nature of the clay.

Pure sand and previously-burnt fire-clay are the substances most commonly and appropriately used.

The Process of Fire-clay Retort Making.—Referring to the period when the fire-clay has been drawn from the mine and undergone the process of weathering, that which is intended for retorts has been kept separate for that purpose, while greater care and attention has been bestowed on it, in order to pick out any pieces of coal or iron with which it may have been associated. This, although seemingly an insignificant, is a very important part of the manufacture, inasmuch as a very small piece or particle of ironstone is sufficient to damage and spoil a whole retort, and thereby occasion considerable loss.

The clay having been thus thoroughly examined and approved, is next ground in a similar manner to ordinary fire-brick clay, excepting that the particles are not ground so fine (the average size of the meshes through which the clay passes for bricks is, say 5 × 6 to the inch, whereas for retorts it is as large as 3 × 4 to the inch), and in order to render the retorts porous, a proportion of coke or sawdust, say ¼ to ⅓ the weight of the whole, is added to the fire-clay, and mixed up with it, both in the grinding and pugging process. The pug-mill, through which this retort clay passes, is generally longer and wider than the ordinary brick-clay pug-mill; or, instead of this, it is not unusual to pass the clay through two pug-mills, the one delivering into the other, so as to ensure the clay being well worked and of a proper consistency.

The manufacture of *clay retorts* was formerly carried on by machinery, but now the same objection may be said to exist against this method, as is the case with regard to machinery for brick-making. The result has, therefore, been that retort-making by hand has now become the rule, and by machinery the very rare exception.

The hand building is performed by small lumps of clay being pressed against the side of a mould or drum the required shape, and this continued till a height of 8 in. or 10 in. is obtained, the walls being gradually built up according to two wooden guides, the one of which indicates the thickness, say 2½ in. to 3 in., the other the outward shape of the retort.

Some clays are more plastic than others, and will consequently bear a higher or longer building, but in general 9 in. are sufficient at once, in order to ensure soundness and firmness. This process of building is continued every day, or as often as necessary, till any length of retort is obtained, the top end always being kept perfectly moist, to guarantee perfect adhesion throughout the whole. The flats or sheds in which these retorts are made, are constructed in like manner to the brick flats, excepting that more height is allowed from the level of the floor to the joists, to contain the longest retorts. Fires are constantly kept burning under the floor on which the retorts are being built, and this process of drying is perhaps one of the most important of the manufacture. If not carefully and properly dried, cracks will show all over the surface, the colour of the fracture will not be uniform, and the retorts essentially bad.

It was stated that coke and sawdust were mixed with the clay in order to make the whole mass porous. To provide against the porosity of the retorts causing a loss of gas, a composition or mixture composed of about equal parts of unburnt and calcined fire-clay finely pulverized with the addition of as much water as renders it a consistency of thick *paste*, is applied day by day to the internal and external surfaces of the retorts, and well worked in (by the hand) to the body of the retort; thus an even, smooth, and unbroken surface, free from cracks and flaws, is produced, and the retort presents a uniform appearance throughout.

The burning of the retorts requires much care and attention, and generally continues for a period of ten to twelve days. The retorts being placed vertically on rows of bricks on the bottom of the *kiln*, the great desideratum is to procure a steady draught, the exclusion of atmospheric air, and a gradually progressive heat.

Opinions differ very widely as to the best shape of clay retorts, the circular, oval, or elliptical, and ⌀, being those commonly advocated and in use, while the egg-shaped, or combination of round and oval, and the round curved ⊂ have each their supporters. In the leading metropolitan works the 15 in. round, and 21 in. × 15 in. oval, in settings of five and seven retorts in a bench, appear to be in favour; these retorts being from 18 ft. 6 in. to 20 ft. in length (open throughout, and charged at each end), are constructed in three or four pieces to suit convenience.

The comparative merits of clay and iron retorts is a subject which has attracted much attention from the gas engineering profession during the past few years. The results of numerous practical trials, comparing their relative durability, economy, and carbonizing power, have from time to time appeared in the various serials devoted to the gas-light interest, and many facts worthy of attention have been elicited by the controversy respecting their comparative excellence. It may seem a matter of much surprise to those unacquainted with the details of these practical essays, that a substance apparently so friable and brittle in its nature as clay should have superseded cast iron to a great extent, and received the highest encomiums from nearly every responsible source. Yet such has been the case, and this important reform, which but a few years ago met with many obstructions, in having to withstand a rigorous prejudice, has lately been gaining ground with great rapidity, and promises ere long to meet with universal approbation.

Brass Founding.—Pure copper is moulded with difficulty, because it is often filled with flaws and air-bubbles, which spoil the casting; but by alloying it with a certain quantity of zinc, a metal is obtained free from this objection, harder, and more easily worked in the lathe. Zinc renders the colour of copper more pale; and when it exists in certain proportions in the alloy, it communicates to it a yellow hue, resembling that of gold; but when present in larger quantity, the colour is a bright yellow; and lastly, when the zinc predominates, the alloy becomes of a greyish white. Various names are given to these different alloys. The one most used in the arts is *brass*, or *yellow copper*, composed of about ⅔ of copper and ⅓ of zinc. Other alloys are also known in commerce, by the names of *tombac*, *similor* or *Mannheim gold*, *pinchbeck* or *prince's metal* (chrysocale), &c.; they contain in addition greater or less quantities of tin.

Tombac, used for ornamental objects which are intended to be gilded, contains 10 to 14 per cent. of zinc; the composition of *Dutch gold*, which can be hammered into very thin sheets, being nearly the same. Similor, or Mannheim gold, contains 10 to 12 per cent. of zinc, and 6 to 8 of tin; and pinchbeck contains 6 to 8 per cent. of zinc, and 6 of tin. The statues in the park of Versailles are made of the following alloy;—

Copper	91	Tin	2
Zinc	6	Lead	1

The alloys of copper and zinc are altered by a high temperature, and a portion of the zinc is

volatilized. If brass be heated in a brasqued crucible in a forge-fire, the zinc is nearly wholly driven off.

Brass is made by melting directly copper and zinc; rosette copper being used, fused in a crucible, and run into water to granulate it. The zinc is broken into small pieces. The fusion is effected in earthen crucibles which can contain from 30 to 40 lbs. of alloy, the metals being introduced in the proportion of $\frac{2}{3}$ of copper and $\frac{1}{3}$ of zinc, to which scraps of brass are added. A certain number of crucibles are placed in an egg-shaped furnace A, Fig. 3013, lined with refractory bricks, and supported by a brick dome, having apertures through which the flame of the fuel passes, the grate F being immediately beneath the dome. The crucibles are introduced through the upper opening of the furnace, which is covered during the smelting by a lid having a hole O for the escape of the gases. A register beneath the grate regulates the draught, and serves for the extraction of the crucibles. When the alloy is fused, the crucibles are removed with tongs, and the brass run into clay moulds; and sometimes it is run between two very smooth slabs of granite, kept at a proper distance from each other by iron rods.

3013.

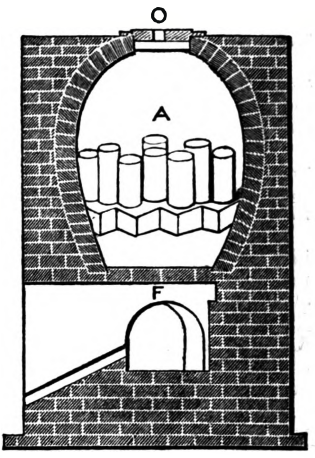

Small quantities of lead and tin are frequently added to brass to make the alloy harder and more easily worked; brass which contains no lead soon *chokes* a file, which defect is remedied by the addition of 1 or 2 hundredths of lead.

Copper and tin mix in various proportions, and form alloys which differ vastly in appearance and physical properties, as tin imparts a great degree of hardness to copper. Before the ancients became acquainted with iron and steel they made their arms and cutting instruments of *bronze*, composed of copper and tin.

Copper and tin, however, combine with difficulty, and their union is never very perfect. By heating their alloys gradually and slowly to the fusing point, a large portion of the tin will separate by eliquation, which effect also occurs when the melted alloys solidify slowly, causing circumstances of serious embarrassment in casting large pieces.

Different names are given to the alloys of copper and tin, according to their composition and uses; they are called *bronze* or *brass*, *cannon-metal*, *bell-metal*, *telescope-speculum metal*, &c. All these alloys have one remarkable property; they become hard and frequently brittle, when slowly cooled, while they are, on the contrary, malleable when they are plunged into cold water, after having been heated to redness. Tempering produces, therefore, in these alloys an effect precisely opposite to that produced on steel.

When alloys of copper and tin are melted in the air, the tin oxidizes more rapidly than the copper, and pure copper may be separated by continuing the roasting for a sufficient length of time.

The following are the principal alloys of copper and tin;—

Cannon-metal, which in France is thus composed;—

Copper	100	90·09
Tin	11	0·91
	111	100·00

Bell-metal, which contains;—

Copper	78
Tin	22
	100

Cymbal and tam-tam metal, composed of;-

Copper	80
Tin	20
	100

Telescope-speculum metal, made of;—

Copper	67
Tin	33
	100

Bronze for medals varies slightly in its composition, and generally consists of;—

Copper	95
Tin	5
Zinc	some thousandths.

Bronze used for the manufacture of ornamental objects generally contains larger quantities of zinc. A portion of the small French coin is made of alloys of copper and tin; and although the red sous consist of nearly pure copper, the yellow sous coined under the Republic, from a metal obtained by melting the bells, contain on an average 86 of copper and 14 of tin.

Cannon Casting.—Gun-metal must fulfil several important conditions. It should be very tenacious, that the pieces may not burst under the enormous pressure caused by the explosion of the powder, while it should be sufficiently hard not to be injured by the ball, which strikes the sides several times before leaving the muzzle; and, lastly, it should be fusible, because large guns can only be made by casting.

Copper and iron are the only metals which possess sufficient tenacity; but as pure iron will not fuse very readily, it is necessary to substitute for it cast iron, the tenacity of which is much inferior. Copper possesses great tenacity, but is too soft; and in rapid service would soon be so battered as to be useless. Recourse must then be had to alloys of copper with other metals; and

long experience has shown that alloys of copper and tin are the most suitable; but as, while tin greatly increases the hardness of copper, it diminishes its tenacity, it becomes necessary to stop at certain proportions of the two metals, at which the alloy possesses both the requisite degree of hardness and tenacity. These proportions, which have been determined by numerous experiments, made at various times and in different countries, have been fixed at 11 of tin for 100 of copper. It has, however, been ascertained that for pieces of a calibre below 8, an alloy of 8 or 9 per cent. of tin is preferable. Many experiments have also been made to ascertain if the alloy could not be improved by the addition of other metals, as zinc, iron, or lead; but these complicated alloys have all been rejected, on account of the great variation of their results; and pieces were frequently rendered useless in consequence of the difficulty of obtaining such alloys homogeneous and of uniform composition.

The use of cast iron for the manufacture of cannon is long subsequent to that of brass. As it is cheaper, it might be very advantageously substituted for bronze, but it is very brittle, and pieces of the same calibre must be much thicker than of the latter metal, thus becoming too ponderous for field service. They are well adapted to stationary batteries, fortifications, coast defence, and ships of war. Cast-iron guns ring much less than those of bronze, and for this reason are preferable on board of ships, where brass pieces, on the lower-deck batteries, would make a noise insupportable by the gunners. Very soft cast iron, made with charcoal, should alone be used for artillery; and some of the Swedish iron is highly valued for this purpose.

The furnaces in which bronze is melted should contain no oxidizing gases, and the atmospheric air traversing them should be deprived by combustion, as far as possible, of its oxygen, because the tin, which is more oxidizable than copper, would constantly separate from the alloy in the form of oxide, and the composition of the bronze, at the time of casting, would not be known with certainty.

Figs. 3014, 3015, represent a melting furnace, used in the cannon-foundry at Toulouse. It is a circular reverberatory furnace A, with a surbased dome, heated by the grate F, on which small billets of wood are burned. The wood being charged through the opening *o*, a thick layer of fuel is heaped on the grate, in order that the atmospheric air, which does not enter the furnace until it has passed through the fuel, shall be completely deprived of its oxygen. The draught is regulated by four elongated working holes *h*, *h*, arising from the hearth-sole, and terminating at the vent-holes *e g*, *e g*, which open into the chimney C, by means of which arrangement the flame is obliged to spread over the metallic bath which covers the hearth-sole. Near the furnace are cavities M M′, lined with cement to preserve them from dampness, and in which the moulds are placed, and kept firm by heaping earth around them. The moulds, which are made of clay, cow's-hair, and horse-dung, intimately mixed, are fashioned on a model in relief, partly of earth and partly of plaster, which is destroyed when the mould is finished, and strengthened by iron bands or loops. Above the mouth of the gun is a prolongation, called the *masselotte*, or lump, the use of which will soon be explained. The moulds, after being baked at a high temperature, so as to dry them as much as possible, are fixed in their places, the breech being downward. Between the tap-hole *i* and the moulds, canals are made which convey the liquid bronze into each mould; and above is a railway *a b*, with a car R, containing a capstan, by means of which the moulds, when filled, can be lifted out and carried away.

3014.

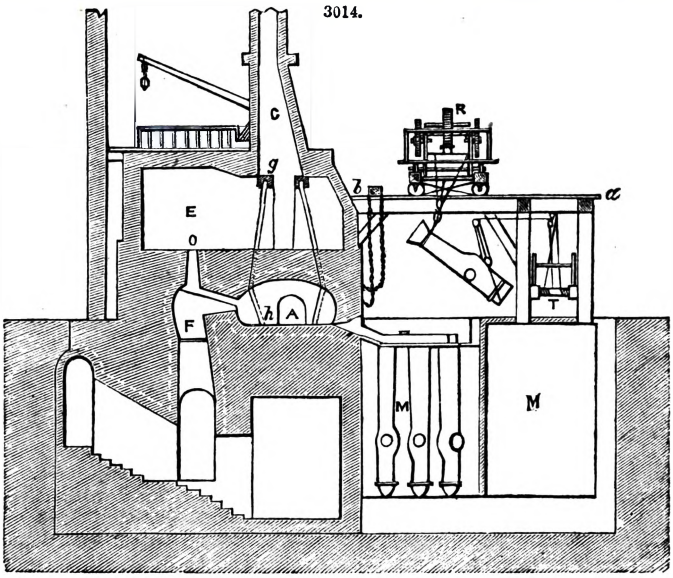

3015.

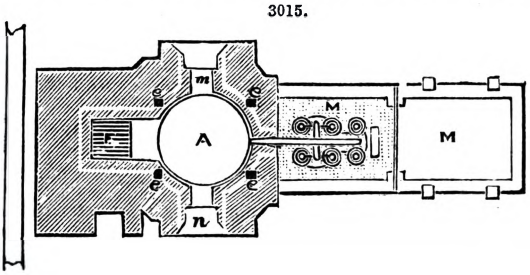

Moulding sand, so well adapted to the moulding of cast iron and other metals, has been substituted for the earth with which the moulds are made, but never with success, as the walls of the sand mould are too compact and too impervious to gases. Now, immediately after the casting of bronze, the metal disengages numerous gaseous bubbles, which pass through the porous walls of the mould, and present less resistance than the high column of melted metal, while in the sand

moulds, the gases not being able to escape through the sides, produce a constant bubbling in the mass, giving rise to numerous flaws, and assisting the separation, by eliquation, of the tin, or alloys rich in tin.

The charge of a furnace is composed of old brass, chiefly condemned cannons, and masselottes taken from pieces previously cast, with brass turnings taken from the lathe or the boring machine and a certain quantity of new metals, copper and tin, besides *white metals*, or alloys very rich in tin, which separate by eliquation in the moulds. The proportions of copper and tin in the several components being determined by analysis, they are mixed in the proportion of 100 copper to 13 or 14 tin, which is reduced by oxidation of tin in the furnace to the normal proportion of 100 : 11.

The condemned cannons and masselottes are laid on the hearth-sole, near the bridge, where the temperature is highest; while the copper, which should be very pure, in bars, and the turnings, are placed thereon, the white metals and tin being added at a later period. In six or seven hours the mass is almost entirely fused, and the flame escapes by every avenue. The smelter first stirs the material with sticks of very dry wood, and draws the portions which are not melted toward the bridge; after which he completes the charge by adding the white metals and tin, which he runs in the form of pigs into different parts of the bath. He stirs it a second time, in order to render it homogeneous, and, after skimming off the superabundant scoriæ, closes the door of the furnace, and blows up the fire, to bring the alloy to a proper state of liquidity, stirs and skims it a third time, and then opens the tap-hole. Other workmen direct the melted metal into each mould.

A remarkable phenomenon ensues in a few moments after the casting. A bubbling takes place in the upper part of the mould, proportioned to the size of the piece and the elevation of temperature, and a portion of the bronze rises in the form of a mushroom, being an alloy much richer in tin than the cast metal. A partial eliquation therefore takes place during the cooling, which causes the separation of an alloy more fusible, and containing more tin. The composition of the piece itself is not uniform, as the proportion of tin diminishes from the breech to the upper part of the masselotte. The intention of the masselottes is, not only to exert considerable hydrostatic pressure on the lower strata of the piece, but also to furnish metal necessary to compensate for the contraction of the metal by cooling, and its loss of substance by eliquation.

Twelve hours after the casting, the earth is cleared away in order to hasten the cooling of the moulds; and the latter are removed after forty-eight hours, broken, and the cast guns carried to the boring and turning shops.

When the surface of the piece is turned, and it has been bored to a certain point, it is examined to ascertain if it be free from such defects as would render it unserviceable. Such defects are various, and called by different names; but they are nearly all produced by eliquation of the tin or very fusible alloys.

Flaws, or *bubbles*, are cavities with smooth surfaces, produced by bubbles of gas which have been unable to escape; while *honeycombs* are cavities with rough surfaces, arising from irregular distribution of the materials or badly-proportioned alloy; and *worm-holes* are similar, but smaller, cavities. *Cendrures* are owing to impurities in the alloy, remaining in the metal, or detached from the sides of the mould; and *tin-spots* are produced by small, very hard masses of an alloy containing 20 or 25 per cent. of tin, which became separated by eliquation, and were unable to ascend as far as the masselotte. *Blasts*, or *cracks* (sifflets), which are longitudinal or transverse grooves, sometimes extending through the whole thickness of the piece, are likewise owing to a separation of the tin.

If the piece is found to be perfect, the boring and turning are completed, and it is subsequently examined and proved according to the regulations of the service.

Tinning of Copper and Brass.—The use of copper and brass for culinary purposes is dangerous, on account of the ease with which copper, on oxidizing by contact with the air and acid substances, forms very poisonous salts, unless the vessels are lined with a coat of tin, which prevents the liquids from coming in contact with the copper. The tinning of copper is effected by cleansing the pieces with chlorohydrate of ammonia, and spreading with a piece of cloth or tow, melted tin over their surface when properly heated. The tin thus adheres to the copper, and covers it completely.

Pins are made of brass wire, and whitened by being covered with a thin coat of tin by the humid way. The pins are first cleansed by heating them in a solution of cream of tartar, and then placed in a copper basin with a solution of cream of tartar and tin. The liquid is boiled for about one hour, when the tin dissolves in the cream of tartar with disengagement of hydrogen gas, and is precipitated on the brass of the pins, covering them with a very thin pellicle of metal.

The Apparatus for Moulding Toothed Wheels, invented by G. L. Scott, Figs. 3016 to 3026, is designed to supply the means of obtaining accurate castings by machine moulding, with a portable and self-contained machine of small cost, capable of being readily and quickly applied at any part of a foundry.

The accuracy and perfection of the teeth of wheels are of great practical importance in all cases of gearing, and especially where large amounts of power are transmitted by them; and it is requisite that the transmission of power should be uniform and continuous through the teeth of the wheels, corresponding to the continued frictional contact of two circles rolling upon each other. To maintain this uniform and continuous action in toothed wheels, all the teeth throughout the circumference of the wheel are required to be precise duplicates of one another in form, size, and spacing; and all to be placed in a perfect circle round the centre of the wheel. Should these conditions be imperfectly carried out, the essential continuous contact will be destroyed, and a serious intermittent knocking between the teeth will be caused, leading to the fracture of the wheel, and risking a stoppage of the machinery. Any defective fitting of toothed wheels also involves a waste of driving power from the irregular shocks in transmitting the power; and as a consequence the wheel will not last so long in such a case, owing to the friction causing extra wear of the teeth.

In the earliest method of making toothed wheels, the teeth were chipped out by hand from the solid edge of the wheel, upon which they were set out and shaped to template. Subsequently the teeth were formed on a wood model of the wheel, and moulded from this model according to the plan in general use, involving the necessity of having a separate expensive pattern for each wheel that differs in form and pitch of teeth as well as in diameter. The result has been a vast collection of tooth-wheel patterns to meet the requirements of ordinary trade demands; and this stock has become so costly in the expense of construction and of the storage space occupied, that it has led to an objectionable limitation in the range of pitch of wheels, in order to reduce the extent of the stock of patterns. The use of wood patterns for entire wheels involves further the practical objection of liability to distortion, both in the general contour of the wheel and in each tooth, owing to the irregular effects of expansion and contraction in the component parts of the pattern, as well as the unavoidable risk of variation in the forms and dimensions of the several teeth, in consequence of the different finish that each receives. The uncertainty, too, attending the drawing of an unwieldy pattern from its mould, and the distortion of the pattern that occurs from its lying in damp sand for a considerable time, are additional obstacles to the manufacture of a toothed wheel from the ordinary wood models with the correctness that is desirable.

The only method of overcoming these difficulties is by employing only a small segment as the pattern, and moulding the entire toothed circumference by repetition of this small portion; employing mechanical means for lowering and raising it, and for spacing out the teeth round the circumference of the wheel, so as to obtain the same certainty of accuracy throughout as is shown by a wheel divided and cut in a machine.

The machine, Fig. 3019, is of two sizes, one for moulding wheels from 12 in. to 5 ft. diameter, and a larger size for wheels from 20 in. to 12 ft. diameter. The smaller machine is shown in Figs. 3016 to 3026. Fig. 3016 shows an end elevation of the machine, Fig. 3019 a side elevation, and Fig. 3020 a plan.

3016.

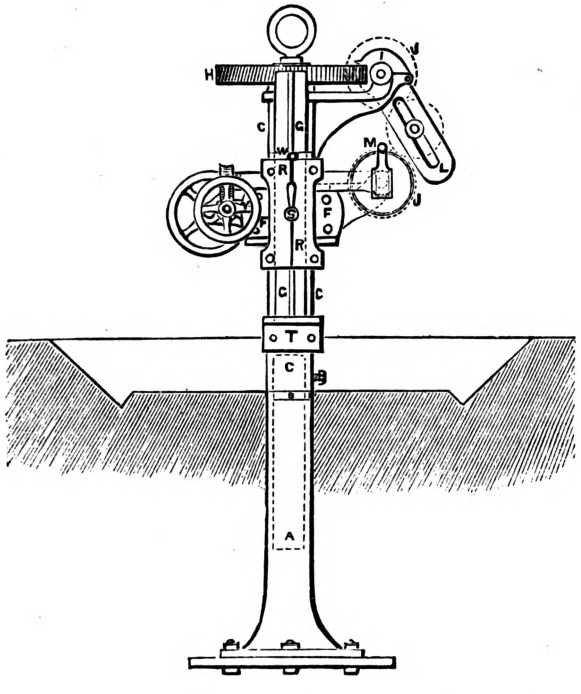

3017.

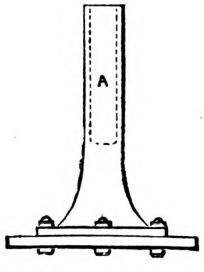

3018.

A pedestal A, Fig. 3017, supports a centre pin B, which has a collar to bear upon the pedestal, and is provided with a projection that fits into a recess in the top of pedestal, whereby it is prevented from turning in its socket. The spindle C is bored to fit on the centre pin B, and is turned to pass up through the rest of the apparatus, which it supports, as shown in section in Fig. 3021. Set screws placed in the spindle C are used to fix it firmly on the centre pin B, and this being secured in the pedestal, a continuous vertical centre spindle is thus obtained. Loose collars provided with set screws, and bored to fit the centre pin B, are used for the purpose of elevating the apparatus above the pedestal A, in order the more readily to adapt it for moulding different breadths of wheels. One of these collars is shown at V in Fig. 3026, and they are of 1, 2, and 3 in. in thickness respectively.

On the spindle C is carried the head D, shown in section in Figs. 3021, 3022, and in this head slide the radial arms E E, connected together at their front ends by the transverse piece F, which forms the bed for the vertical sliding ram G. The arms E E are secured to the head D in any required position by four square-headed bolts passing through slots in the arms and through ears cast on the head; these bolts being screwed up bind the arms and head firmly together. The spindle C being firmly secured in the pedestal forms a stationary centre pillar for the machine, on which the head D is free to turn; and on the top of the spindle is keyed the worm-wheel H, from which a connection is made to the arms E by the dividing apparatus, shown in Figs. 3016, 3019,

and 3020. This consists of a worm I gearing into the wheel H, and the change wheels J J J, the uppermost wheel being on the worm-shaft and the lowest one keyed on the shaft K, which is carried by brackets on the arm E, and is provided with a loose collar acting as a bearing, so that the shaft

3019.

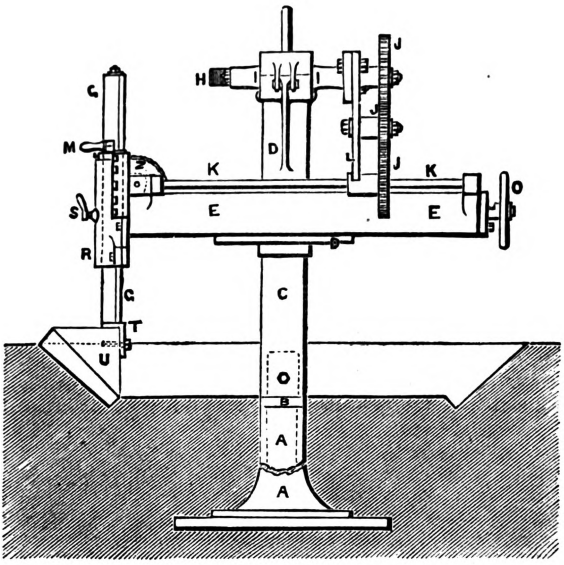

3021.

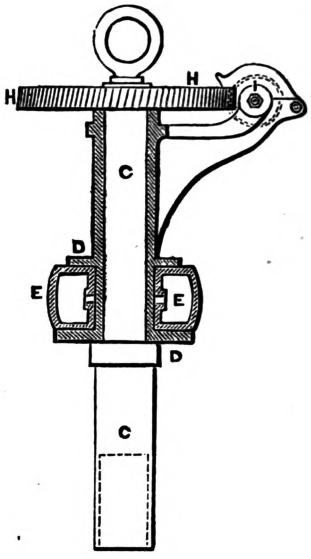

3020.

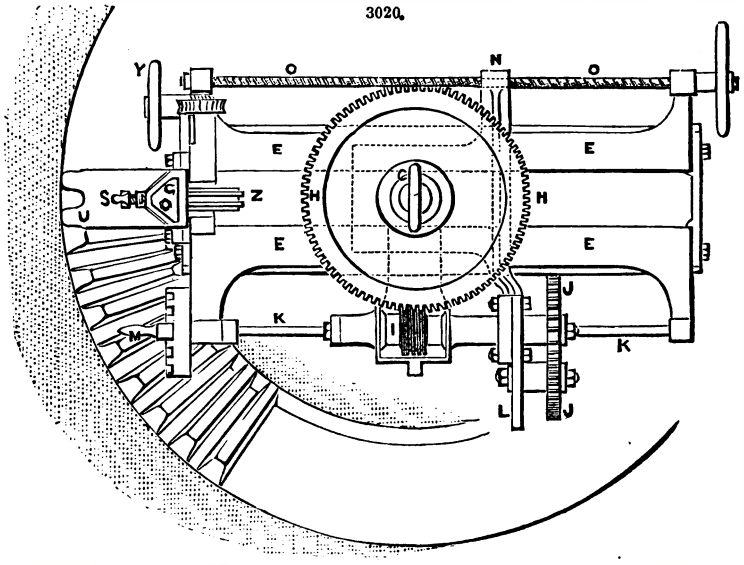

3022.

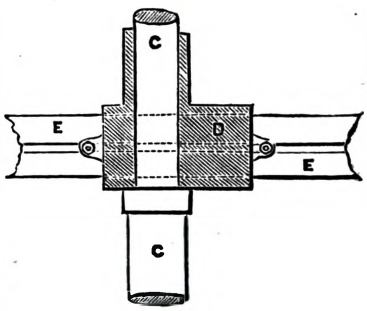

may be withdrawn for altering the change wheels when required. The swing frame L carrying the change wheels is sufficient for two intermediate change wheels if required. On the shaft K is fastened a spring handle M, which fits a slot in a disc that is divided to guide the workman in the number of turns to be given to the shaft. The traversing screw O is carried by brackets on the arm E, and passes through the nut N bolted to the head D, so that by turning the screw O by the hand-wheel at the end the arms are moved in or out, to suit the varying diameters of wheels to be moulded.

On the slide-bed F fits the vertical sliding ram G, which is held in by the cover R, shown in section in Fig. 3023; and a hand-screw S retains the ram in any required position. The bottom of the ram is bored to receive the angle-bracket T, which is secured in it by steady pins; and to this is attached the segment pattern U in the wheel-teeth to be moulded. The ram is moved up or down by a hand-wheel Y, having a

worm gearing into a worm-wheel, on the shaft of which is a pulley Z; from this pulley two chains pass in opposite directions, the one being secured to the bottom of the ram and the other to the top, and kept always tight by means of two lock-nuts. An adjustable brass collar W is fitted on the ram, for indicating to the moulder when the ram is sufficiently lowered. An eye-bolt is fixed on the top of the centre pillar C of the machine, for attaching the foundry crane in order to remove the machine.

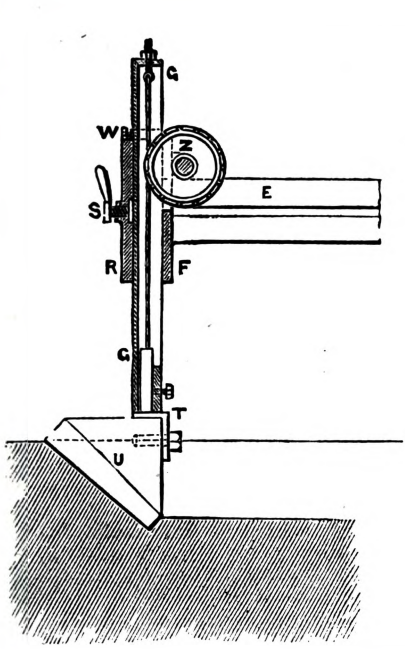

3024.

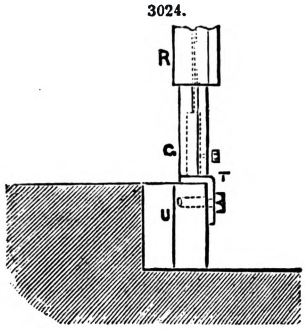

3025.

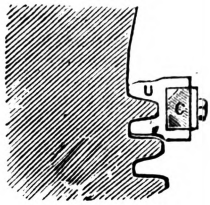

3026.

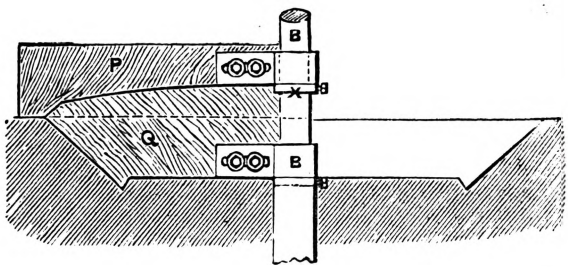

The process of moulding a wheel with this machine is as follows. A core box for the arms of the wheel is first prepared and also two radial boards for strickling the form of the top and bottom of the wheel in the sand, which are shaped to the profiles of the face and back of the wheel. The top board P, shown in Fig. 3026, has on its lower edge the profile of the back of the wheel; and the bottom board Q has also on its upper edge the counterpart profile of the back of the wheel, and on its lower edge the profile of the face. A pattern is also made of a segment of the toothed rim of the wheel, consisting of two teeth only, which permits of moulding one space at a time.

A secure and steady foundation for the moulding machine is obtained by sinking in the sand of the foundry floor in the desired situation the pedestal of the machine, which is bolted to a cast-iron base-plate about 4 ft. square; sand is then rammed solidly upon it, and the pedestal levelled so as to be truly vertical. Another form of pedestal is shown in Fig 3018, which is used for fixing in the sand without a base-plate. The top of the pedestal is placed about 15 in. below the floor level, this distance determining the greatest breadth of wheel that can be moulded. The centre pin B of the machine is then placed in the socket of the pedestal, for the purpose of forming the mould for the bed of the wheel, and also to mould the top box or other arrangement used to cover the mould for casting; the rest of the machine being laid aside for the present.

In Fig. 3026 is shown the loose collar V which is placed upon the centre pin B, of such thickness that its upper face is the same depth below the floor level as the breadth of the rim of the wheel to be moulded; so that the back of the wheel is level with the floor, for convenience of fitting the top box on. This lower collar V is fixed by a set screw, and an upper loose collar X is also fitted on the centre pin B by a set screw, with its upper face at the same height above the collar V as the breadth of the rim of the wheel; the lower collar thus exactly indicates the level of the bed and face of the wheel, and the upper collar that of the back of the wheel. The hole is then filled up with sand to the level of the upper collar; and the iron trammel carrying the top board P is placed upon the spindle B, and worked round upon the collar X, forming a mould of the back of the wheel, which is then sprinkled with parting sand to form the parting for the top box. An ordinary top box or other sufficient covering is then placed on, and rammed up with sand, and the box is then staked in the ordinary manner, for the purpose of marking its correct position relatively to the bottom part of the wheel, by stakes driven into the sand and fitting by the side of corresponding ears upon the top box. The top box is then lifted off, carrying with it the impression of the back of the wheel, which impression is finished by turning the box over, and strickling it again with the second trammel that carries the bottom board Q. A centre is provided in the top box for this trammel, by means of a loose collar, in which are two bolts that pass through the top box and are fastened across the bars of the box. This loose collar fits the spindle B, and is drawn from it with the top box, thus fixing a strictly accurate centre. By this arrangement the centring collar can be readily fixed upon any ordinary top box, giving strict accuracy in the moulding, without requiring any special boxes for the purpose.

For forming the bed of the mould the top collar X is then removed, and the mould being dug

out to the level of the bottom collar V, the sand is strickled with the bottom radial board Q, worked round upon the bottom collar V. This forms the mould for the lower and outer faces of the teeth, and finishes the mould ready to receive the teeth and the cores for the arms; and as both the back and the face of the wheel have been struck from the same trammel and the same centre, accuracy is ensured in the wheel.

The segmental pattern of the teeth U, Figs. 3024, 3025, is then fitted truly square and central and secured by screws upon the angle-bracket T of the vertical sliding ram G, Fig. 3019. The upper portion of the machine is then placed upon the spindle B, the trammel having been removed; and the fixing screws in the spindle are screwed up, to maintain the central axis continuous through the machine. The segmental pattern U is adjusted by the traversing screw O, Fig. 3020, to the correct radius of the wheel, measuring from the top of the tooth to the centre of the machine. The ram G is then lowered to the level of the bed of the wheel, and secured at that point by the locking screw S; and the brass collar W is adjusted on the ram and fixed by a set screw, to ensure the ram always stopping at the same level, when lowered for moulding each successive tooth. The locking screw S prevents the ram rising from the pressure of ramming the sand. One space of the wheel-teeth is then moulded by ramming sand in the space left between the pattern and the edge of the mould previously formed by the strickle-board. The locking screw S being released, the ram carrying the pattern is raised clear of the mould, and is traversed round through the exact distance of the pitch of the wheel, by means of the dividing handle and the change wheels previously arranged for the required pitch. The segmental pattern is again lowered, and a second space moulded as before.

When all the teeth have been moulded, the fixing screws of the centre spindle are released, and the whole machine is then lifted away by the foundry crane laying hold of the eye-bolt on the top of the spindle, leaving the mould entirely clear to receive the cores for the arms and boss. The hole in the top of the pedestal is fitted with a cover to keep out the sand, and is then covered over with sand, which protects the pedestal against the action of the hot metal. The centre core for the wheel is adjusted as usual from the circumference, and the cores for the arms are set to their places by means of wood gauges showing the thickness of the arms and rim. The top box is then put on, to cover the mould, being placed in its correct position by the stakes; the runner is formed, the box duly weighted, and the whole is ready for casting.

Whitworth's Apparatus, Figs. 3027 to 3037, for subjecting steel to a high pressure during the process of casting. In casting some articles, such as hoops and other hollow forms, Whitworth, when using rams arranged to give a pressure to the melted metal in the mould, after applying the pressure for some time, and when the mass has become solidified, withdraws the internal resisting instrument, or core, to allow the metal to contract freely in cooling. In forming other articles, such as those of considerable length, Whitworth applies the pressure to the outer surfaces of the mould, and makes the latter in sections, between which dried loam or sand is placed, so as to allow the air to escape, and to permit of the sections being brought closer together. The object of Whitworth is to obtain sounder castings, and to do away with the necessity for great "heads" of metal.

In our illustrations, Fig. 3027 shows an elevation, and Fig. 3028 a vertical section, of the apparatus. Figs. 3029 to 3032 are horizontal sections, at the lines A B, C D, E F, and F G, in Figs. 3027, 3028, respectively. In the figures just mentioned, A is a cast block, having in its centre a cylinder B of steel, within which a plunger C works; this plunger, when water or liquid is forced into the cylinder B, raising the ram Q. D D are two screw-columns, the lower ends of which are securely fixed through the casting A, whilst the upper parts above A have threads formed upon them, so that the cast block E may be supported in any desired position upon them by means of screw-nuts, G, G, G^1, G^1. The mould E F is of steel, in order that it may be of sufficient strength to sustain the great pressures to which it is subjected. This steel mould is secured in the casting E by a screw-nut F^1; within the mould is a filling piece J, which is of cast iron, and is securely retained by a nut J^1. Within the filling piece J is the lining H, of cast iron, perforated with numerous holes to facilitate the passage of air and vapour, or gases; and at the outer surface of this lining are numerous grooves, in order that the air and gases, as they pass through the perforations, may get away freely. The interior of the perforated metal lining H has a lining of sand, loam, clay, or other refractory material, which is moulded in the metal lining to the required form, and is then dried and put into position to receive the melted steel. The metal lining H is retained in its place by the turn-buckles or stops U U, and the casting E is arranged to turn on one of the screws D D as on an axis, so as to come outside the press when it is desired to remove the article from the mould, and when introducing a fresh mould into position. K is a core, which is of metal, and is coated with sand, loam, or other suitable refractory material; the coating is formed separately from the metal core, and dried, and is then placed on the metal core, and is retained in its position by pins, together with the lower nose K^2 of metal, as shown. The upper end of the stem of the metal core K is fixed into the bar K^1, which is fixed in the under-side of the piston R, the latter working in a hydraulic cylinder formed at the upper part of the iron block or casting L.

The stem of the core K is capable of sliding through the tubular plunger M, fixed, as is shown, to the casting L, and the lower end of this tubular plunger is formed of steel, and is faced with sand, loam, or other refractory material. It closes on the melted metal in the mould when the casting L is lowered, and resists the passing away of the metal when the pressure of the ram Q of the plunger C is applied to the bottom. The upper cylindrical part of the casting L is hooped with steel, and when of considerable dimensions it may be lined with a cylinder of steel. The piston-rod R^1 of the piston R has a screw-thread cut on its outer surface for the purpose of adjustment, according to the length of the core K required; and O O are two collars, secured, as is shown, to the upper or cylindrical part of the casting L. The piston-rod R^1 is capable of sliding freely up and down through the holes in the collars O O, except when locked by the screw-clip N^1. The

block or casting L is also, when not locked by the screw-clips N N, capable of being raised or lowered on the upright screws D D. The screw-clips N N and N^1 are each in two parts, which are capable of being moved to or from each other by left and right handed screws on the shafts P P and P^1. The screw-shaft P^1 passes through the slot in the hollow piston-rod R^1; and against each side of the bearing p^2, on the casting L, it has two collars, p^1 p^1, fitted on it, which prevent it being moved laterally through the slot. On the screw-shaft P^1 is a hand-wheel, by which that shaft is turned, and by which the two parts of the screw-clip N^1 N^1 are caused to separate or come together, and when together to lock the piston-rod R^1, and prevent it moving through the collars O O. The left and right handed screw-shafts P have pinions P^2 fixed upon them, these pinions gearing with two wheels P^3 P^3, as shown. The wheels P^3 P^3 turn on axes fixed to one of the two parts of which each screw-clip N N is formed, the outer ends of these axes being connected together by a bar, as shown. To each of the wheels P^3 a lever P^4 is fixed; these levers are connected by a rod P^5, having its ends jointed to them, so that when one of the two levers P^4 is moved, it, by the connecting rod P^5 gives motion to the other lever, and consequently both their wheels are simultaneously rotated, and the two wheels in their turn give simultaneous motion to the screw-shafts P, by means of their respective pinions. It is preferred that the block or casting L, and the parts connected with it, should be raised and lowered as required by hydraulic power, but they may be moved by other apparatus attached to the eye-bolt S. In the arrangements shown, the pouring of the melted steel or iron into the mould is intended to be performed before the core is introduced into the mould, and this is desirable where the sides of the hollow casting are comparatively thin, as is the case in casting hexagon shells; but where the sides of the hollow article to be cast are of greater thickness, and where the pouring of the melted metal may be freely performed after the core is in its place in the mould, the core may be introduced into its position before pouring.

3027.

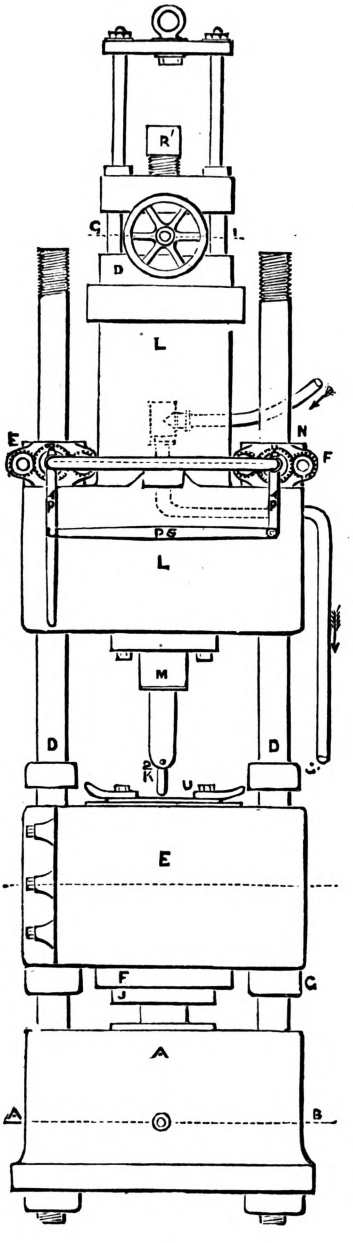

3028.

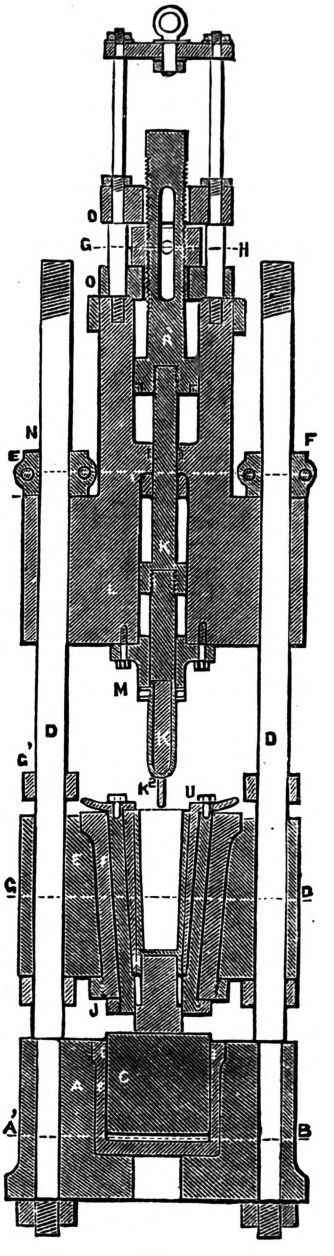

3029.

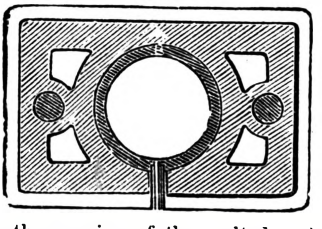

3030.

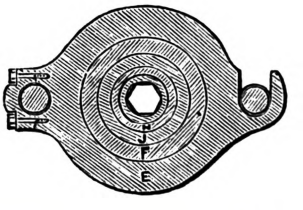

In using the apparatus, the melted steel is poured into the mould, and the block L is quickly lowered into position; the screw-clips N N are then to be locked, and the ram Q brought up by its plunger C, and the melted metal thus subjected to great pressure. When the metal has become set, the metal core K is raised, and in rising it will become free from the coating of sand, loam, or refractory material. The metal core K is lifted by admitting water under pressure to the space under the piston R, which piston is set free by unlocking the screw-clip N^1. The core K is raised up through the part M, which remains in position, so that the metal remains still compressed within the mould. In casting steel shells weighing 150 lbs., Whitworth finds the pressure should remain on about eight minutes before the core K is withdrawn. The lifting of the metal core K allows the cavity formed in the hot metal to contract in the latter part of the cooling. The distance between the nuts G and G^1, on the screws D D, is left greater than the depth of the block E, to allow of sufficient movement upwards whilst the pressure is being applied, and to prevent the turn-buckles or stops U U being broken off, and the metal lining H pushed out. The mould F, and also the core shown in the engravings as being used with it, are suitable for casting hexagon shells, but other forms of moulds and apparatus for casting other hollow bodies, such as hoops or cylinders, and others where cores are used, and where it is desired to have the power of withdrawing such cores whilst the casting of steel or iron still remains under pressure in the mould, may be employed in this press.

3031.

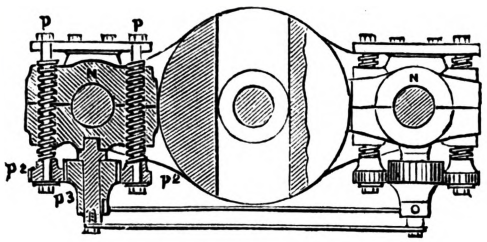

3032.

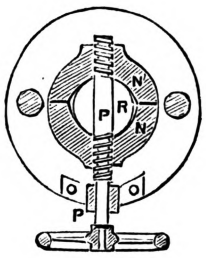

3033.

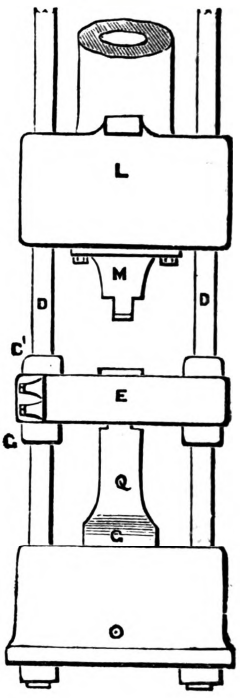

3034.

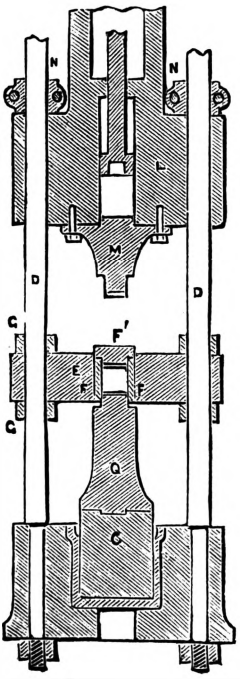

3035.

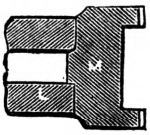

3036.

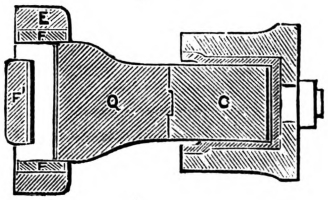

3037.

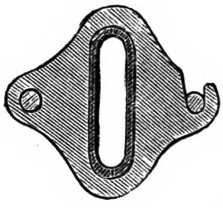

Fig. 3033 shows an elevation of some of the principal parts of a press similar to that already described; Fig. 3034 a vertical section of it; and Figs. 3035 to 3037 show vertical sections of the parts taken at right angles to the section shown at Fig. 3034. The mould here shown is suitable for casting an ingot under great pressure, there being no central core, as in the arrangement just described. The mould F, which is of steel, is suitable for chill-cast ingots of the form shown. F^1 F^2 are the movable top and bottom parts of the mould; the part F is made with inclined sides, and is received into the block or casting E, which is retained in any desired position on the screws D, by the screw-nuts G G^1; the part F^2 of the mould is carried by the ram Q, actuated by the plunger C in the hydraulic cylinder. The part F^1 of the mould is not made so long as the parts F F^2 in order to leave spaces at the end open, through which the melted metal is poured, and the mould on this side is made complete by the two parts F^3 F^3. The parts F^1, F^2, and F^3 are coated with baked sand or loam, and such may be the case when required with the sides of

the mould, and where necessary provision is to be made for the getting away of the air and gases, as before described; these coatings of sand prevent the sudden chilling of the metal, and enable smaller ingots to be cast and pressed than would otherwise be possible. In using this arrangement of moulds, the melted metal having been poured in, the block or casting L is lowered, and by this means the upper part or side of the mould is made complete; the screw-clips N are then locked together, and the part F^1 being pressed on by the part M, the hydraulic plunger C is then put into motion, and pressure applied to the fluid metal in the mould. When the article is set and sufficiently cooled, the clips N are unlocked, and the parts connected with the block L raised, and then, by a further motion of the ram Q, the mould and ingot may be lifted out of the block E. Either, or both, of the top and bottom surfaces, F^1 and F^2, may be actuated by hydraulic or other power; when both are so actuated, they should be simultaneously caused to approach each other. In this manner various forms of solid castings may be produced, the moulds being formed accordingly, such, for instance, as cranked or other axles or shafts, the connecting and other rods of steam-engines, and other similar articles; and when the length is considerable, the movable sides of the steel moulds used may be actuated by several hydraulic rams. No rule can be given as to the extent of pressure which may be most advantageously applied in all cases, as the thickness, quantity, and quality of metal acted on vary so largely, whilst the forms of the articles to be cast also differ very largely. Careful observation, however, on the part of the workman will enable him quickly to judge.

It may, however, be desirable to remark, that where the metal in the interior of a casting is found, on cutting or removing the ends or other parts, to have formed itself into irregular crystals, it has not been subjected to sufficient pressure, or the pressure has not been continued for a sufficient length of time. The character of the metal of such a casting, if of steel, may be improved and rendered more uniform throughout by heating it to a moderate red heat, and then subjecting the casting to further pressure, either on end or lengthwise, or both, according as it may be desired to contract or extend the length; this heating and subsequent pressure is also advantageous in removing or breaking off the very hard coating of sand, loam, or other refractory matter employed on the surfaces of the moulds.

By applying the pressure in the manner described, by reference to Figs. 3033 to 3037, to the whole length of the article which is being produced, the pressure may be maintained uniformly on every part until the operation is complete; whereas with plungers acting at the end or on comparatively small parts of the surface of the article, this is not the case, the pressure then ceasing to be uniform when the metal is no longer fluid.

Whitworth remarks that in subjecting fluid steel or iron to very high degrees of pressure in steel moulds, and at the same time cooling it in them, it is of importance that the amount of the pressure applied should always exceed that produced by the shrinking or cooling which is simultaneously going on; or in other words, the pressure applied should be sufficient to overcome the counteracting forces resulting from the rapid cooling of the surfaces of the article, and the slower cooling of the interior metal, so that the atoms are caused to approach each other by the pressure more rapidly than the counteracting forces can separate them.

Caslon and Fagg's Type-founding Machine, Figs. 3038 to 3046.—This invention relates, first, to breaking off the lump or piece of superfluous metal that is cast with and adheres to the body of the type when discharged from the ordinary moulds or machines, and which lump or piece of superfluous metal is usually broken off from the type by hand; and, secondly, to the arrangement of apparatus for rubbing the sides of the cast type and thereby removing the burr or rough edges at the angles of the body of the type.

Figs. 3038 to 3042 show two arrangements for effecting the severance of the lump of superfluous metal from the body of the type.

Figs. 3038, 3039, are side and front elevations of this machine; the movable half of the mould being thrown up out of action the better to explain the construction of the parts. A is the fixed die or half of the mould, and B the movable die or half thereof. The movable die is attached to a swinging arm C having its fulcrum at C^1; affixed to the arm C is a bracket *a*, on which is mounted a hook-shaped rocking plate *b*. To the forward end of this plate is connected a finger *c*, which slides in a guide formed for it in the bracket-arm *a*. The object of this finger is to advance at a proper time and move over the gate or entrance of the mould, and assist in severing the lump from the type. When the mould B is brought down into position a curved and cranked bar D will enter the recess formed in the hook-shaped rocking plate *b*. This curved bar is secured by a bolt to the slotted arm of a crank-lever E, the other arm of which enters a slot in a rock-lever F furnished with a roll that lies in contact with a cam G. The rotation of this cam will give a rocking motion through the levers F and E, and the cranked curved bar D to the plate *b*, and thereby cause it to move the finger *c* to and fro in its guide. The bar D is curved to allow of the type-moulds when closed being rocked towards the metal supply cylinder to receive the jet of metal without the position of the plate *b* being affected thereby. When the type-mould is being closed the finger *c* will be drawn to its backward position clear of the surfaces of the moulds, and in that position it will remain until the dies open. As the upper die rises it will carry with it the cast type, suitable provision having been made in that die to secure adhesion, and the finger *c* will be pushed forward over the lump as shown at Fig. 3039. So soon, however, as the upper die B rises to the position shown in Fig. 3038 the head of the type by projecting will come in contact with a shoulder *e* on the stationary die, and the lump or superfluous metal being retained in the die by the finger *c*, the type when hard metal is used in the casting will be broken off and discharged from the die into a suitable receptacle below. The finger *c* will then be withdrawn and the waste end or lump will fall from the die. From this explanation it will be understood that the severance of the waste metal from the body of the type will be effected by an automatic operation.

Another mode of effecting this object, and designed chiefly for use when soft type-metal is employed, is shown at Figs. 3040 to 3042. The action of this modification may be best described

as a shearing off the superfluous or waste metal. The divided gate of the mould instead of being formed with the dies as usual is made separate and capable of an independent motion. Fig. 3040 is a side view of a mould constructed according to this modification, and Fig. 3041 is a plan view of the lower die, and Fig. 3042 a partial top view, showing the levers for operating the gate.

a, *a**, are the top and bottom dies, and *b*, *b**, the parts that form the gate. They are jointed to the dies, and upon the part *b* bears an adjustable screw *c*, which is carried by a rock-lever *d*. The tail end of this lever is borne up by a lever *e*, which may be operated in any convenient way according to the construction of the machine to which the apparatus is to be fitted. The part *b** is formed with a projection in the under-side of which bears a spring *f*. When a type has been cast by the injection of the metal through the gate as usual the lever *d* will be rocked by the lever *e*, and the gate will thereby be forced down, taking with it the lump or waste piece contained therein; the top die will then rise, lift out the type from the bottom dies, and discharge it as before described, while the waste piece falls out of the gate by its own gravity. The part forming the lower half of the gate will be thrown up into position.

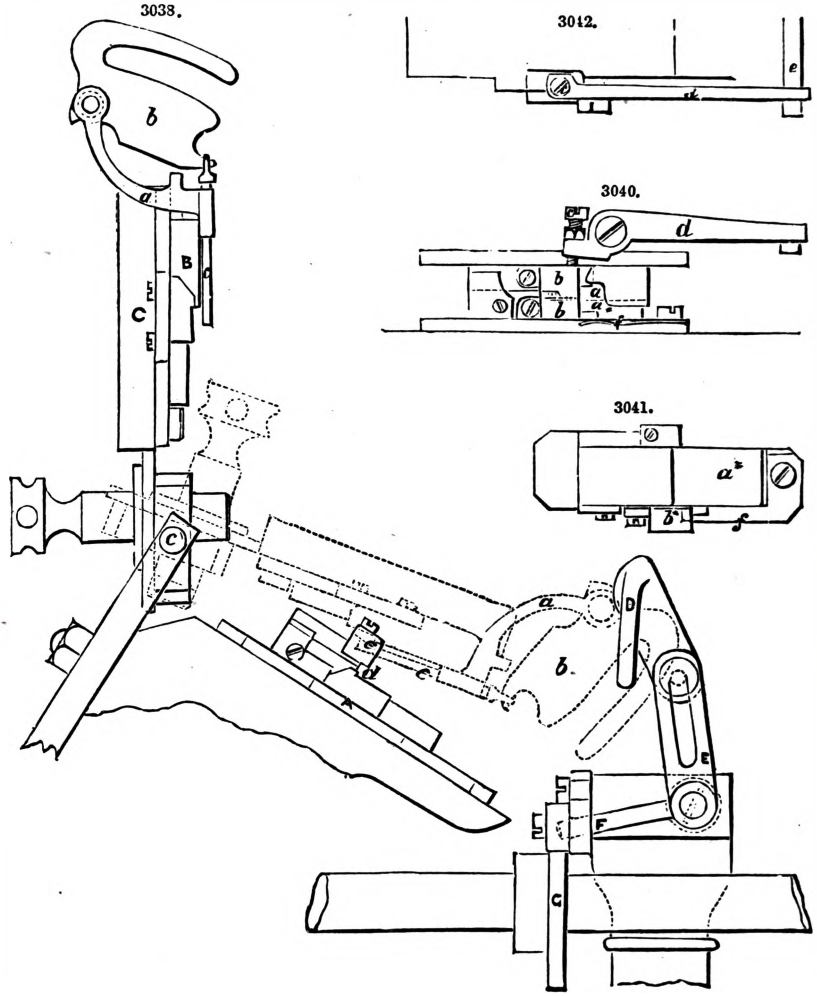

The second part of the invention, which relates to an apparatus for effecting the rubbing or finishing of the body of printing types, which operation has heretofore been effected by hand-labour, is shown in several views, Figs. 3043 to 3046. Fig. 3043 represents the apparatus in longitudinal elevation; Fig. 3044 is a plan; Fig. 3045 is a cross-section taken in the line 1, 2; and Fig. 3046, a cross-section taken in the line 3, 4, of Figs. 3043, 3044. In these views A, A, is the main framing; B, a V-shaped guide for supporting two vertical slides C and D, the uses of which will be presently explained. E is a sliding table, which has a slow endway motion imparted to it, and to which is securely attached a bracket-arm E^1. At F a stationary file is represented secured to the main framing A, and intended to receive the types as they are fed into the machine, and finish on one side. The opposite side is in like manner finished by a file surface carried by the slide D. Mounted on guide-pulleys, on the extremities of the bracket-arm E^1, are vulcanized rubber bands *a*, *a*, which form a kind of endless apron for receiving the type to be operated upon. This type, shown in Fig. 3044, is laid across the bands by an attendant, and by the rotation of the bands the types are carried forward until they are brought under a vulcanized rubber roller *b*,

which passes the types forward under a fixed plate *c*, the hinder types pressing forward the forward ones. When the foremost type has come in a line with the file F it is pushed on to that file, the end of the file being made smooth to permit of its sliding off freely. This endway motion of the type is effected by a finger *d*, projecting from a slide d^1, which is actuated through the instrumentality of a roll d^2, carried by the slide C, on which slide is also mounted a pressing pad *e* that now comes down upon the type, and holds it in contact with the file F, while by the back traverse of the slide C it draws the type towards the rear end of the file, and finally discharges it on to a stationary padded table *f*. The slide C now moves forward again to effect, through its roll d^2, the discharge of a second type on to the file F. Simultaneously with the forward movement of this slide C moves the slide D, which carries the file surface for operating upon the upper side of the type. In passing the table *f* this slide rubs the type lying thereon, it being kept in position by the end of the file F, which presents a shoulder that it cannot pass, and by this means the upper side of the type is rubbed or finished like the under side. Mounted in a bracket-arm attached to the rear end of the slide D is a rotary brush G, which now, through the continued forward traverse of the slide, comes over the finished type, and by its rotation brushes away the dust made by the files, and also discharges the type on to a leather shute or receiver H, from which it may be taken up by hand.

3039.

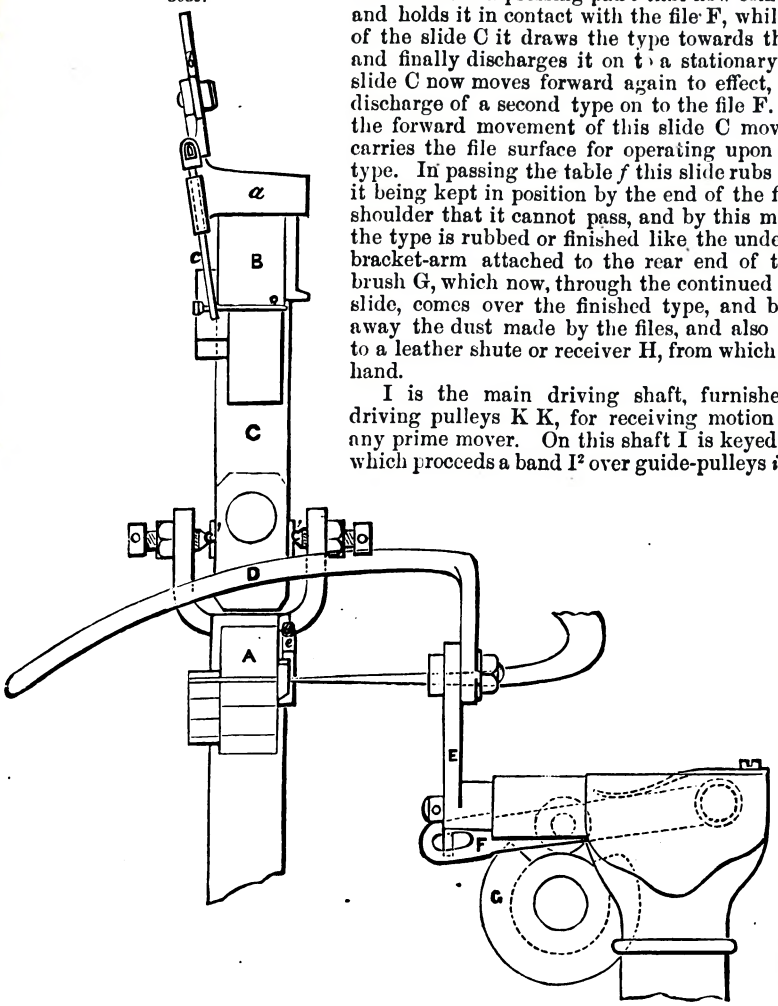

I is the main driving shaft, furnished with fast-and-loose driving pulleys K K, for receiving motion through a strap from any prime mover. On this shaft I is keyed a band-pulley I^1, from which proceeds a band I^2 over guide-pulleys *i i i*, and a double guide-pulley i^1, mounted on a bracket attached to the main framing. This band I^2 passes once around a pulley *g* on the axle of the traversing brush G, then forward to a fixed guide-pulley *h*, back to the pulley i^1, and so to the driving pulley I^1; by this means, therefore, rotary motion is communicated to the brush G. From the double pulley i^1 a band *k* passes to a pulley k^1, keyed to a vertical screw-shaft k^2, which rests in a foot-step, and is supported at its upper end by a bracket from the main framing. The screw

3043.

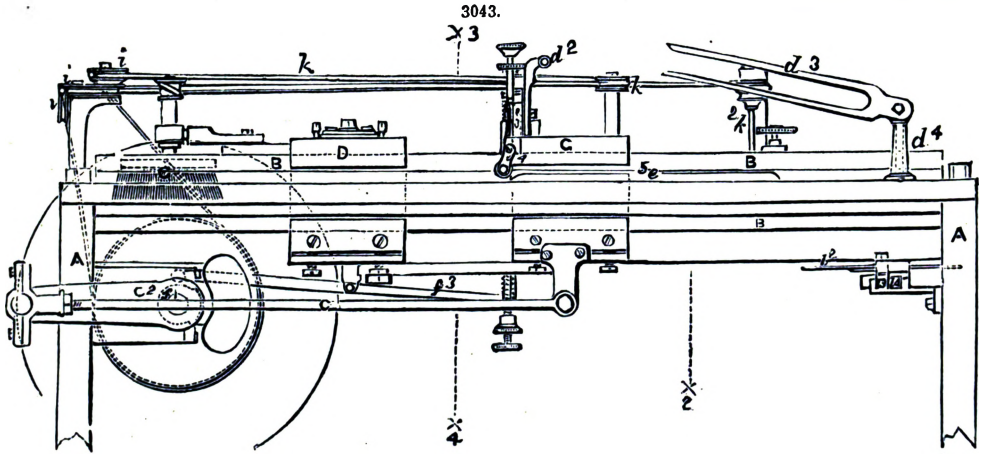

of this shaft works into a worm-wheel b^1, keyed to the shaft of the vulcanized rubber roller *b*, which, as before stated, takes the type from the bands *a a*, and passes them forward under the guide-plate *c* to the front end of the file F; the rotation, therefore, of the screw-shaft gives,

through the worm-wheel b^1, a slow rotary motion to the roller b. The rotation of the bands a is obtained from a band-pulley on the end of the worm-wheel b^1 by means of a band a^1, which passes over and drives a pulley keyed to the short shaft a^2, on the opposite end of which is keyed the outer pulley for receiving the bands a. The inner pulley, which keeps these bands at tension, is shown at a^3, Figs. 3044, 3045. The traverse motion of the slides C and D is obtained from the main driving shaft I, through a connecting rod C^1, jointed at its forward end to the slide C, and at

3044.

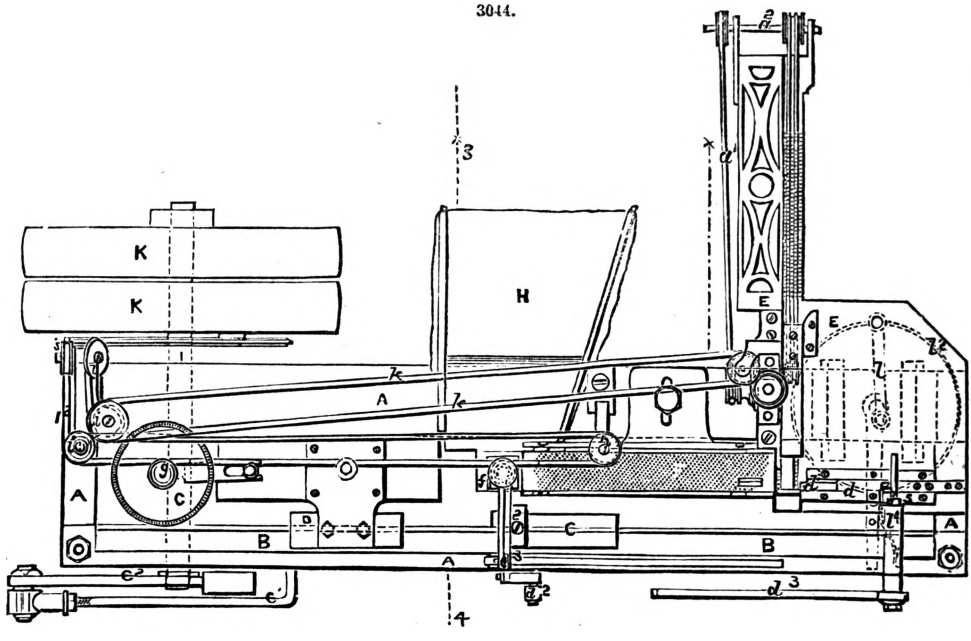

3045.

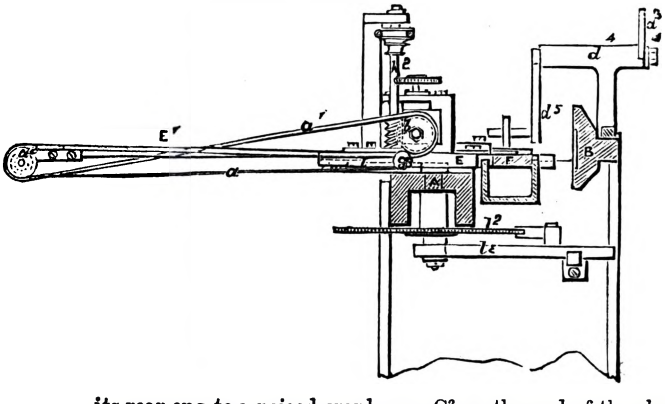

3046.

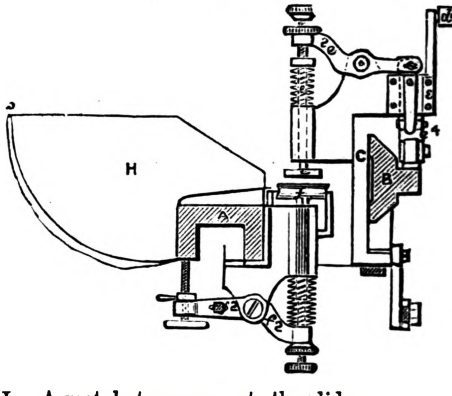

its rear end to a poised crank-arm C^2 on the end of the shaft I. A metal strap connects the slides C and D together. For giving the motion to the finger d which pushes the type on to the file F, the roll d^2, as it moves forward, is caused to enter the forked arm d^3 of a crank-lever carried by a bracket-arm d^4. The arm d^5 of this lever carries a crank-pin, which works in a fork projecting upwards from the slide d^1. As, therefore, the roll d^2 traverses within the forked arm, that arm will be caused to rock, and thereby traverse the slide d^1 in its guides, and thrust forward the finger d at the proper time for discharging the type on to the file surface F. In order to bring down and retain the pad e in contact with the type on the file surface while travelling back with the slide C, the pad is mounted on a sliding stem e^1, which works in a guide fixed to the slide C. Bearing on the upper end of this stem is an adjusting screw carried by a rock-lever e^2, which has its fulcrum on the guide-bracket; jointed to the opposite end of this rock-lever is a sliding bar e^3, working in suitable guides on the slide C, and jointed to the lower end of this sliding bar is a tumbling piece e^4, which carries at its lower end a small friction-roll. This roll works over a raised bar e^5, on the main framing, and during the forward progress of the slide C the tumbling piece is drawn loosely over the bar. When, however, the back traverse commences, the tumbling piece will be forced into an upright position, thereby driving up the sliding bar e^3, the effect of which will be to press down the adjusting screw of the rock-lever e^2 on to the stem e^1 of the pad e, and thus depress the pad e, and cause it to press upon the type last pushed forward on to the file surface F. The continued backward motion of the slide will enable the pad e to draw the type over the file F, as before mentioned, and discharge it on to the table f. Having effected this operation, the pad will be caused to rise by means of a coiled spring surrounding its stem, the

tumbler meanwhile having arrived at the end of the raised bar e^5, and thereby removed the upward thrust from the rock-lever, and allowed the spring to act. A similar motion to that described for the pad *e* is imparted to the table *f*, for the purpose of pressing the type up against the file surface carried by the slide D, which surface, as before mentioned, operates upon and finishes the upper side of the type. This table *f* is carried by a vertical stem f^1, and is held down by a coiled spring. An adjustable screw, carried by a rock-lever f^2, having its fulcrum on the stem-guide which is attached to the main framing, serves to press up the table when required. This rock-lever f^2 is itself operated by a rock-lever f^3, Fig. 3043, which enters a slot in the lever f^2, and carries at its other end a roll that bears a cam f^4 on the driving shaft. The fulcrum of the lever f^3 is carried by a bracket pendent from the framing A, and as the lever is rocked by the *cam* it will raise the table *f*, and keep the type in contact with the rubbing surface of the passing slide D. When, however, that slide has acted, the rock-lever will allow the table to fall into the position for receiving another type.

In order that the successive types may take different lines of traverse over the file surface F, a continuous lateral motion is given to the table E. This is effected by mounting it on guides, and connecting it by a link *l*, with a vertical crank-shaft l^1, carried by the main framing. At the lower end of this shaft is keyed a ratchet-wheel l^2, into the teeth of which takes a click which is carried by a loose arm l^3. As the slide C moves forward, it strikes against this arm, and causes the click to drive round the ratchet-wheel a certain distance; a spring l^4, when the slide retires, throws back the arm to its quiescent position. This action being repeated, the crank-shaft will be caused slowly to rotate, and thus shift each successive type into a different position relatively to the file surface F, thereby causing each portion of the surface to act in turn upon the successive types.

See ALLOYS. ASSAYING. BLAST FURNACE. FURNACE. GEARING. MOULDING. PIN-MAKING MACHINE. REAGENTS AND FLUXES. See also articles on the various Metals.

FOUNDRY. FR., *Fonderie;* GER., *Giesserei;* ITAL., *Fonderia;* SPAN., *Taller de fundicion.*

A *foundry* is a building arranged and fitted for casting metals. See FOUNDING AND CASTING.

FRICK'S METAL. FR., *Métal de Frick;* GER., *Frick'sches Metall.*

See ALLOYS.

FRICTION. FR., *Frottement;* GER., *Reibung;* ITAL., *Attrito;* SPAN., *Friccion; rozamiento.*

We usually distinguish two kinds of friction. One, called *friction of sliding*, is produced when bodies slide one upon the other, whence it results that the primitive points of contact are found ceaselessly at distances respectively different from new points of contact, which is expressed in saying that they have experienced displacements, relatively unequal, and in opposite directions. The second kind of *friction*, improperly called *rolling friction*, takes place when bodies roll one upon the other, when the distances of the new points of contact from the old are the same upon both bodies, and when the relative displacements are equal. As the word friction implies, generally, the idea of sliding, and not that of rolling, it will be proper to admit only one kind of friction, that of sliding, and to designate the other by the name of *resistance to rolling.*

Review of Ancient Experiments.—The first experiments known upon the friction of sliding are due to Amontons, and are inserted in the Memoirs of the Ancient Academy of Sciences, 1699. This philosopher knew that friction was independent of the extent of surfaces, but he estimates its value at a third of the pressure for wood, iron, brass, lead, &c., coated with lard, which is far too much.

Coulomb in 1781 presented to the French Academy of Sciences, experiments made at Rochefort, and much more complete than those of Amontons. The apparatus he used consisted of a bench, formed of two horizontal timbers 6 ft. long, upon which a sledge loaded with weights slid by the action of a weight suspended to a cord, which, passing over a fixed pulley, was attached horizontally to the sled.

By means of this disposition, Coulomb at once determined the effort necessary to produce motion after the bodies had remained some time in contact. This is what he called the *resistance or friction of departure.* He saw that this friction was proportional to the pressure, and he expected to find it composed of one part proportioned to the extent of the surface of contact, which he termed adhesion—and of another part independent of this surface. He then sought the value of friction during motion, and for this effect he observed, with a stop-watch of half seconds, the time employed by the sled in running successively the first 3 ft. and the next 3 ft. of its course.

But as in these durations, sometimes equal to 1″ or 2″, he might be mistaken by a half second at the end, and also at the commencement of the experiment, there resulted very great uncertainties which did not admit of establishing his conclusions in a positive manner, and we may say he rather conjectured than observed the laws which he inferred from his experiments. Still he admitted that, generally, friction during motion is;—

1st. Proportional to the pressure.

2nd. That it is independent of the extent of the surfaces of contact.

3rd. That it is independent of the velocity of motion, with some restrictions, which subsequent experiments did not confirm.

Coulomb also first established the fact, that for compressible bodies, the friction at starting, or after a contact of some duration, was greater than it was after the first displacement.

Experiments at Metz.—The uncertain observations, and the restrictions adduced by Coulomb, and above all the more general use of metals in the construction of machines, called for a new series of experiments, which Morin made at Metz, in 1831, '32, '33, and '34, by means of new processes.

Summary Description of the Apparatus used.—In the smelting yards of this ancient foundry, upon a flag-stone foundation, and at the side of a trench, Fig. 3047, was established a horizontal bed, composed of two parallel oak beams A A, 0·98 ft. square, and 26·24 ft. long, connected and supported by sleepers 3·28 ft. apart. These beams, which jutted about 4·26 ft. beyond the edge of the trench, were connected with four uprights B B, between which was placed a platform F F, which bore the pulley for passing the cord, to which was suspended the motive weight, placed in a box K.

This cord was fixed horizontally to a sled D, charged with weights, under which was placed the body to be experimented upon.

The cord, instead of being attached directly to the sled, was fastened to the front plate of a dynamometer with a style, whose flexure measured the tension of the cord, both at its starting and during its motion.

3047.

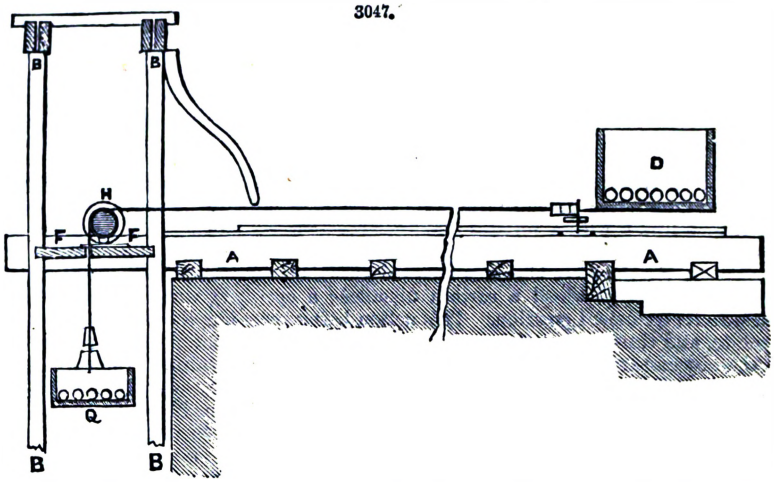

The axis of the pulley had a copper-plate H, perfectly smooth and covered with a sheet of paper. Opposite this plate, clockwork communicated uniform motion to a style, formed of a brush filled with India ink, whose point described a circle 0·459 ft. in diameter. The parallelism of the plane of the circle, and that of the plate, was also perfectly established by precise methods, and the contact of the brush was produced or interrupted at will.

Upon the box K may be placed two others for holding weights, which, after producing the motion, may at a certain height be stopped by cleats, so that the motion continues only in virtue of the load and weight of the box Q. By this means, we may at will obtain, with the box Q alone, an accelerated motion, and with the three boxes, a motion at first accelerated, then uniform or retarded, according as the weight of the box is sufficient to overcome the friction or is inferior to this resistance.

Examination of the Graphic Results of Experiments.—From the synchronism of the two motions, the one of the style being uniform and with a known velocity, and the other unknown, corresponding in a constant ratio with the spaces described by the sled, there must result a curve whose abstract will give us the law of the motion of the sled. We may then, by this abstract, form a table of spaces described, and of the corresponding times, and construct a curve whose abscissæ are the spaces, and whose ordinates are the times. The curves thus constructed are perfectly continuous, and we see, as has been indicated, page 5, that they are parabolas, that is to say, their abscissæ are proportional to the square of their ordinates.

From the fact of this curve being a parabola, we are justified in the inference that the motion is uniformly accelerated. Now, the motive weight being constant, the motive force producing the acceleration of motion is the excess of this weight above the friction, and since this excess is constant, it follows, necessarily, that the friction is constant and independent of the velocity.

Experiments repeated with all the bodies used in the construction of machines, with or without unguents, having always led to the same consequences, we are authorized in regarding this law as general, at least within the limits of the velocity of observation; that is to say, of about 11·5 ft., and in the assumption that the restrictions which Coulomb anticipated have no existence in reality. See p. 1315.

Formulæ employed in Calculating the Results of Experiments.—The apparatus which we have just described affords a simple example of a machine in which the motion is variable, and enables us to apply the general principles which we have previously pointed out. We take advantage of it to show the method of procedure in similar cases.

We call P the weight of the descending box, including its load and that portion of the cord which hangs always under the pulley, neglecting, however, the quantity by which it is increased in its descent, which seldom exceeds 2 lbs.; T the tension of the horizontal strip; $q = 13{\cdot}79$ lbs., the weight of the pulley.

V_1 the angular velocity of the pulley at the instant considered.

v_1 the quantity by which the velocity varies in an element of time t.

$I = {\cdot}04551$ the moment of inertia of the pulley and of the pieces turning with it.

$f = 0{\cdot}164$ a ratio determined by special experiments, of the friction to the pressure, for the iron axle of the pulley and the ash-wood cushions greased; $R = 0{\cdot}032\,T$ the rigidity of the twisted cord, determined also by especial experiments.

N the pressure of the axle of the pulley upon the journals.

r the radius of the pulley.

r' the radius of its journals.

If we refer to the principles upon the motion of variable rotation, pp. 43, 103, 303, 1349, we shall see that at each instant of the motion of the pulley, the sum of the moments of the exterior forces must be equal to the sum of the moments of the forces of inertia.

Now, the sum of the moments of the exterior forces is $P r - T r - R r - f N . r'$. The sum of the moments of the forces of inertia answering to a velocity v_1 of angular velocity is easily found; for, one of these forces, relative to a molecule of the mass m, situated at a distance r_1 being $m . \frac{v_1 r_1}{t}$, its moment in respect to the axis is $m r_1^2 \frac{v_1}{t}$, and the sum of the similar moments is $I \frac{v_1}{t}$, for all parts turning around the axis.

The moment of inertia of the weight P is $\frac{P}{g} \frac{v_1 r}{t} r$, and must be added to the preceding; we have then, at each instant of variable motion of the pulley, the relation

$$P r - T r - R r - f N r' = I \frac{v_1}{t} + \frac{P}{g} \frac{v_1 r}{t} r.$$

The pressure N upon the axle of the pulley being the resultant of two perpendicular forces, the one horizontal equal to the tension T, the other vertical and equal to the weight P of the box, increased by the weight of the pulley, and diminished by the force of inertia $\frac{P}{g} \frac{v_1 r}{t}$, which is developed in the acceleration of the vertical motion of the weight P, and is opposed to its acceleration; we have then

$$N = \sqrt{\left(P + q - \frac{P}{g} \frac{v_1 r}{t}\right)^2 + T^2}.$$

Now, according to an algebraic theorem of Poncelet, the value of a radical of the form $\sqrt{a^2 + b^2}$, in which we know beforehand that $a > b$ is given to nearly $\frac{1}{25}$ by the formula $0{\cdot}96\, a + 0{\cdot}4\, b$. In applying it to the case in hand, where we have always $P + q - \frac{P}{g} \frac{v_1 r}{t} > T$, since the weight P exceeds the resistance T and the friction of the sled, we have to $\frac{1}{25}$ nearly

$$N = 0{\cdot}96 \left\{P + q - \frac{P}{g} \frac{v_1 r}{t}\right\} + 0{\cdot}4\, T.$$

The relation of the equality of moments becomes then, in making $R = 0{\cdot}032\, T$,

$$P r - T r - 0{\cdot}032\, T r - 0{\cdot}96 f r' \left\{P + q - \frac{P}{g} \frac{v_1 r}{t}\right\} - 0{\cdot}4 f r' T = \frac{I v_1 r}{r t} + \frac{P}{g} \cdot \frac{v_1 r}{t} r,$$

and in deriving from this equation of the first degree the value of T, the tension of the horizontal strip of the cord, we find

$$T \left\{1 + 0{\cdot}032 + 0{\cdot}4 \frac{f r'}{r}\right\} = P \left\{1 - 0{\cdot}96 \frac{f r'}{r}\right\} - 0{\cdot}96 f q \frac{r'}{r} - \frac{P}{g} \frac{v_1 r}{t} \left\{1 - 0{\cdot}96 \frac{f r'}{r}\right\} - \frac{I}{r^2} \frac{v_1 r}{t}.$$

In substituting for the known quantities their values, which are

$$f = 0{\cdot}164, \quad r' = 0{\cdot}030512 \text{ ft.}, \quad r = 0{\cdot}36417 \text{ ft.}, \quad I = {\cdot}04551,$$

whence $\frac{I}{r^2} = 0{\cdot}34317$, we have for the practical formula which gives the tension T, when we know the weight P of the box, $T = 0{\cdot}95 \left\{P - \left({\cdot}34685 + \frac{P}{g}\right) \frac{v_1 r}{t}\right\} - 0{\cdot}1753$ lb.

When experiment has demonstrated that the acceleration $\frac{v_1 r}{t}$ is constant, and the abstract of the curves, in giving their equation $T^2 = 2\, C\, E$, shall have furnished for the acceleration the value $\frac{v_1 r}{t} = \frac{1}{C}$, in calling 2 C the parameter of the parabola, we shall have all the elements required to calculate the value of the tension of the cord in the experiment. It will be

$$T = 0{\cdot}95 \left\{P - \left({\cdot}34685 + \frac{P}{g}\right) \frac{1}{C}\right\} - {\cdot}1753 \text{ lb.}$$

When the motion is uniform the acceleration $\frac{v_1 r}{t} = \frac{1}{C}$ is zero, and the above formula is reduced to $T = 0{\cdot}95\, P - 0{\cdot}1753$ lb., or simply $T = 0{\cdot}95\, P$, on account of the small value of the second term ·1753 lb.

In extracting directly from the curves of tension of the dynamometer, the values of T relative to more than forty experiments, in which the loads have varied from 26 to 209½ lbs., we have found that the ratio of the tension to the load, thus furnishing a direct measurement, was at 0·96, which shows that all the data introduced in the above formula leads to a result which accords with this measure, within very satisfactory limits of correctness.

Relations between the Tension of the Cord and the Friction of the Sled.—Knowing the tension of the cord T, by means of the dynamometer, or having calculated it by the preceding formula, it is quite easy to deduce the value sought, of the friction of the sled, in applying directly the principle of action equal and opposite to reaction. In fact, the tension T, and the friction sought F, are two external forces with opposite directions, whose difference T — F produces the motion of acceleration of the sled. On the other hand, the resistance which the inertia of the weight Q of the sled opposes to this *acceleration* is $\frac{Q\,v_1\,r}{g\,t}$.

We have then for the equality of action and reaction, $T - F = \frac{Q\,v_1\,r}{g\,t} = \frac{Q}{g} \cdot \frac{1}{C}$, whence

$$F = T - \frac{Q}{g} \cdot \frac{1}{C}.$$

When, by direct observation, or by the formula of the preceding number, we shall have determined the tension of the cord, we must for the value of the friction subtract from it the quantity $\frac{Q}{g}\frac{1}{C}$, easily calculated when we know by the abstract the parameter 2 C of the curve of motion.

Such is the method which was adopted for the calculation of all the experiments where the motion was accelerated; as for those where the motion is uniform, we have simply F = T.

We see that the law of the motion being once known by the abstract of the curves, and being that of a uniformly accelerated motion, we may, after having proven the constancy and the generality of this law, pass to the use of the dynamometer, and rest content with the indications of the chronometric apparatus.

Results of Experiments.—The friction of oak, sliding upon oak without unguent, with the fibres parallel to the direction of the motion.

In this experiment we have Q = 295·22 lbs.; P = 203·38 lbs.

The trace of the curve gives for the parameter 2 C = 0·6339 ft., whence $\frac{1}{C} = 3{\cdot}154$, and consequently the tension $T = 0{\cdot}95\left\{P - \left(0{\cdot}34685 + \frac{P}{g}\right)\frac{1}{C}\right\} - {\cdot}1753 = 173{\cdot}05$ lbs.

The other formula gives for the value of friction $F = T - \frac{Q}{g} \cdot \frac{1}{C} = 144{\cdot}1$ lbs.

The ratio of the friction to the pressure is here then $\frac{F}{Q} = \frac{144{\cdot}1}{295{\cdot}2} = 0{\cdot}488$.

EXPERIMENTS UPON THE FRICTION OF OAK UPON OAK, WITHOUT UNGUENTS; THE FIBRES OF THE WOOD BEING PARALLEL TO THE DIRECTION OF MOTION.

Extent of Surface of Contact.	Pressure, Q.	Motive Weight during Motion, P.	Tension of the Cord, T.	Parameter.	Value of the Acceleration, $\frac{1}{C}$.	Friction, F.	Ratio of Friction to Pressure, $\frac{F}{Q}$.	Velocity of Motion.	
								Uniform.	Acceleration at 9·84 ft. of its Course.
sq. ft.	lbs.	lbs.	lbs.	feet.		lbs.		feet.	feet.
	295·22	148·58	141·15	..	..	141·15	0·477	2·264	..
	295·22	203·38	173·02	0·634	3·123	144·1	0·488	..	7·77
	333·52	171·03	162·48	..	..	162·48	0·487	..	..
2·798	970·63	504·32	479·10	..	..	479·44	0·491	1·345	..
	970·63	610·01	536·64	0·850	2·352	466·41	0·480	..	6·726
	1499·13	930·23	819·18	0·862	2·320	709·33	0·472	..	6·693
	2291·56	1273·69	1164·91	1·688	1·184	1080·60	0·471	..	6·299
	2291·56	1114·91	1059·16	..	..	1059·16	0·462	3·511	..
	102·09	64·95	54·17	1·914	1·044	50·86	0·498	..	4·495
	108·53	56·59	53·77	..	..	53·77	0·496	4·20	..
	120·55	62·90	59·75	..	..	59·75	0·495	4·92	..
	120·55	98·39	76·44	0·384	5·208	56·95	0·472	..	10·072
1·062	226·81	186·83	152·57	0·472	4·237	110·38	0·486	..	8·924
	227·63	132·64	117·77	1·054	1·897	104·36	0·458	..	6·102
	332·76	162·72	154·58	..	..	154·58	0·464	4·101	..
	440·03	211·37	200·80	..	..	200·84	0·456	2·001	..
	440·24	210·45	199·93	..	..	199·93	0·454	2·789	..
	215·67	108·62	103·19	..	..	103·19	0·478	3·478	..
0·33	321·47	175·49	164·74	0·933	2·145	133·34	0·414	..	6·918
	604·06	468·80	389·44	0·506	3·952	293·51	0·484	..	8·858

When the motion is uniform, as in the sixteenth experiment of the above Table, we have simply for

$$Q = 440{\cdot}37 \text{ lbs.}, \quad P = 211{\cdot}37 \text{ lbs.},$$

$$F = 0{\cdot}95\,P = 200{\cdot}84, \quad f = \frac{F}{Q} = \frac{200{\cdot}84}{440{\cdot}37} = 0{\cdot}456.$$

EXPERIMENTS UPON THE FRICTION OF ELM UPON OAK, WITHOUT UNGUENTS; THE FIBRES OF THE WOOD BEING PARALLEL TO DIRECTION OF MOTION.

Surface of Contact.	Pressure, Q.	Motive Weight during Motion, P.	Tension of the Cord during Motion, T.	Parameter, 2C.	Acceleration, $\frac{1}{C}$.	Friction.	Ratio of Friction to Pressure, f.	Velocity at 9·84 ft. of its Course.
sq. ft.	lbs.	lbs.	lbs.	feet.		lbs.		feet.
1·338	260·05	161·31	139·19	0·732	2·734	117·18	0·45	7·55
	260·05	187·42	153·06	0·469	4·261	118·88	0·45	9·45
	921·38	506·69	450·40	0·984	2·031	392·27	0·43	3·60
	921·38	480·24	440·46	1·859	1·075	408·73	0·44	4·62
	921·38	454·13	416·77	1·902	1·051	386·62	0·42	4·48
	921·38	664·42	525·72	0·377	5·291	374·53	0·41	12·46
	1980·10	1113·83	976·94	0·802	2·494	821·76	0·42	7·41
	1980·10	1007·77	927·09	1·993	1·003	865·54	0·44	4·04
	1980·10	1113·83	911·42	1·206	1·657	787·42	0·40	5·68
	1980·10	1298·70	1104·86	0·600	3·330	899·99	0·45	8·10
·063	244·81	135·42	122·36	1·414	1·414	108·93	0·45	5·25
	389·58	311·19	240·06	0·347	5·756	171·43	0·44	10·50
	917·79	479·76	439·82	1·734	1·153	408·60	0·44	4·76
						Mean ..	0·434	

EXPERIMENTS UPON THE FRICTION OF SOFT OOLITIC LIMESTONE OF JAUMONT, NEAR METZ, UPON STONE OF THE SAME KIND, WITHOUT UNGUENT

Surface of Contact.	Pressure, Q.	Motive Weight during Motion, P.	Tension of the Cord during Motion, T.	Parameter, 2C.	Acceleration, $\frac{1}{C}$.	Friction, F.	Ratio of Friction to Pressure, $\frac{F}{Q}$.	Velocity of 9·84 ft. of its Path.
sq. ft.	lbs.	lbs.	lbs.	feet.		lbs.		feet.
0·861	314·04	254·18	222·40	0·829	2·412	198·89	0·633	6·890
	314·04	254·18	218·36	0·682	2·929	187·60	0·597	7·579
	1264·18	999·63	853·54	0·621	3·216	727·50	0·575	7·940
	1374·94	1034·92	859·41	0·499	4·001	700·86	0·549	8·858
	1274·94	1034·92	859·41	0·499	4·001	700·86	0·549	8·858
						Mean ..	0·580	
0·499	309·56	293·88	245·40	0·536	3·725	209·56	0·677	8·498
	331·62	293·88	244·65	0·524	3·815	207·97	0·627	8·662
	1257·50	1034·92	925·13	1·066	1·874	851·95	0·677	6·070
	1257·50	1140·78	943·99	0·488	4·101	783·89	0·623	8·990
	1257·50	1140·78	924·32	0·426	4·687	741·28	0·589	9·613
						Mean ..	0·639	
Rounded edges.	298·40	240·95	218·30	1·426	1·402	205·31	0·688	5·249
	298·40	240·95	211·02	0·841	2·377	189·01	0·633	6·824
	298·40	293·88	239·18	0·451	4·433	198·10	0·664	9·350
	597·93	465·91	421·45	1·341	1·491	393·79	0·659	5·413
	597·93	465·91	431·15	2·499	0·800	416·28	0·696	3·970
	597·93	571·77	485·40	0·597	3·347	423·25	0·709	8·104
						Mean ..	0·675	
						General Mean ..	0·631	

When the soft limestone slides upon soft limestone, and especially when the moving body rests upon surfaces of small area, the latter are destroyed rapidly during the experiment. This circumstance, and the presence of the dust powder resulting from it, have not changed the laws observed.

Though leather is a soft and very compressible substance, its friction is proportional to the pressure, and independent of the velocity, throughout the whole range of the experiments in the next Table.

EXPERIMENTS UPON THE FRICTION OF STRONG LEATHER, TANNED, AND PLACED FLATWISE UPON CAST IRON.

Area of Surfaces in Contact.	Nature of the Unguent.	Pressure.	Motive Weight during the Motion.	Tension of the Cord.	Parameter.	Value of the Acceleration, $\frac{1}{C}$.	Friction.	Ratio of Friction to Pressure.	Velocity at 9·84 ft. of its Course.
sq. ft.		lbs.	lbs.	lbs.	feet.		lbs.		feet.
0·4155	Nothing.	471·02	320·35	291·83	1·548	1·292	272·75	0·579	5·02
		1106·42	637·94	606·04	..	..	606·04	0·547	..
							Mean ..	0·563	
0·4155	Water.	291·01	188·02	154·78	0·497	4·024	118·63	0·408	8·86
		291·01	161·55	133·85	0·524	3·816	96·44	0·342	8·66
		291·01	135·08	118·83	0·926	2·159	99·49	0·342	6·56
		1115·03	977·58	689·54	0·244	8·196	407·11	0·365	12·70
							Mean ..	0·364	
0·4155	Tallow.	1114·10	214·48	193·80	2·042	0·979	163·21	0·146	4·53
		1114·10	214·48	198·54	2·584	0·776	172·38	0·155	3·87
		1114·10	320·36	279·52	0·795	2·516	192·43	0·172	7·09
		1114·10	426·10	350·41	0·475	4·210	182·99	0·164	9·06
							Mean ..	0·159	
0·4155	Oil.	298·49	39·26	37·30	..	..	37·29	0·124	..
		299·17	92·19	76·29	0·548	3·649	42·52	0·142	8·46
		1114·10	148·32	140·91	..	..	140·91	0·126	..
		1114·10	214·48	196·22	1·804	1·108	157·93	0·141	4·59
							Mean ..	0·133	
	Oily surface.	1114·10	320·35	294·48	2·011	0·944	260·07	0·233	4·66
		478·92	135·08	123·77	1·950	1·025	108·66	0·227	4·66
							Mean ..	2·30	

EXPERIMENTS UPON THE FRICTION OF BRASS UPON OAK, WITHOUT UNGUENT; FIBRES OF WOOD PARALLEL TO THE DIRECTION OF MOTION.

Surface of Contact.	Pressure.	Motive Weight during Motion.	Tension of the Cord.	Parameter.	Acceleration, $\frac{1}{C}$.	Friction.	Ratio of Friction to Pressure.	Velocity at 9·84 ft. of Course.
sq. ft.	lbs.	lbs.	lbs.	feet.		lbs.		feet.
·433	257·13	161·46	153·36	..	..	153·39	0·60	..
	257·13	161·61	153·61	..	..	153·54	0·60	..
	1539·90	981·99	932·69	..	..	932·89	0·60	..
	1539·90	1114·32	1068·80	1·548	1·291	1007·79	0·65	..
	1539·90	1273·11	1101·97	0·707	2·828	967·05	0·62	7·48
	1989·83	1378·97	1290·72	4·346	0·460	1262·61	0·63	3·05
0·141	248·31	161·72	153·60	..	..	153·61	0·61	..
	248·49	188·36	169·56	1·283	1·558	157·58	0·63	5·21
	763·97	532·07	487·11	1·956	1·022	462·99	0·60	4·92
	1531·26	981·89	932·69	..	..	932·89	0·61	..
	1531·26	1273·11	1103·69	0·719	2·780	971·73	0·63	7·51
						Mean ..	0·616	

For the experiments where we have not indicated the value of the parameter of the law of motion, and that of the acceleration, the motion was slow and somewhat uncertain.

The results contained in this Table confirm the three laws before enumerated, but we remark that the mean value of the friction, which is here 616, is more considerable than in the case of oak rubbing against oak, or than that of elm upon oak, for which the results are consigned to the Tables of pages 1572 and 1573.

We shall see, by the following Table, that the coefficient diminishes considerably when the friction occurs between two metallic surfaces

EXPERIMENTS UPON THE FRICTION OF CAST IRON UPON CAST IRON.

Surfaces of Contact.	Unguent.	Pressure, Q.	Motive Weight during the Motion.	Tension of the Cord during the Motion.	Parameter, 2 C.	Acceleration, $\frac{1}{C}$.	Friction.	Ratio of Friction to Pressure.	Velocity at 9·84 ft. of Path.	
sq. ft.		lbs.	lbs.	lbs.	feet.		lbs.		feet.	
		496·10	108·62	95·78	0·993	2·012	64·49	0·130	6·37	
		496·10	135·09	113·38	0·585	3·417	60·79	0·122	8·20	
		1091·14	320·37	283·32	0·938	2·130	211·15	0·193	6·50	
		1091·14	426·08	336·38	0·378	5·291	157·18	0·144	10·17	
0·3874	Noth.	1104·80	174·79	166·05	..	..	166·05	0·150	..	Slow.
		4412·70	796·73	745·58	4·267	0·468	681·74	0·154	3·25	
		4412·70	929·06	865·85	3·316	0·604	783·54	0·177	3·48	
		4412·70	1054·77	949·52	1·158	1·726	712·94	0·161	5·81	
							Mean ..	0·154		
		1104·37	399·74	361·17	1·402	1·426	312·32	0·282	8·90	
		1104·37	505·61	432·96	0·646	3·095	324·60	0·293	9·25	
0·3874	Water.	2202·70	770·26	731·36	..	..	731·36	0·332	..	Uniform.
		2202·70	876·13	806·43	2·036	0·982	739·30	0·336	4·53	
							Mean ..	0·311		
		1091·14	201·25	191·15	..	..	191·15	0·175	..	Slow.
0·3874	Soap.	1091·14	320·37	287·77	1·251	1·598	231·00	9·211	5·68	
		1091·14	373·30	321·78	0·695	2·878	224·47	0·205	7·09	
							Mean ..	0·197		
		496·10	52·49	49·87	..	..	49·87	0·100	..	Slow.
		496·10	78·96	65·48	1·950	1·024	50·40	0·101	4·56	
		1103·43	108·64	103·17	..	..	103·17	0·093	..	Slow.
		1103·43	201·25	179·20	1·060	1·885	114·64	0·104	6·17	
		1103·43	240·95	212·87	0·939	2·130	117·81	0·106	6·47	
0·3874	Tallow.	2214·98	293·88	271·14	2·286	0·875	211·30	0·095	4·20	
		2214·98	293·88	274·54	4·023	0·497	243·34	0·109	3·08	
		2214·98	426·10	379·70	0·999	2·000	243·33	0·109	6·30	
		6185·82	624·70	593·47	..	..	593·47	0·096	..	Very slow.
		1108·14	108·62	103·17	..	..	103·17	0·093	..	Slow.
							Mean ..	0·101		
			129·48	118·70	2·011	0·994	84·62	0·076	4·53	
			129·48	118·13	1·767	1·131	79·44	0·071	4·72	
			133·89	121·19	1·395	1·432	72·16	0·065	5·61	
			133·89	120·99	1·414	1·414	72·54	0·066	5·58	
			138·31	126·29	1·767	1·131	85·82	0·077	4·59	
0·3874	Lard.	1103·43	138·31	124·41	1·295	1·544	71·55	0·065	5·51	
			138·35	123·55	1·341	1·491	72·71	0·066	5·44	
			138·35	124·41	1·295	1·544	71·55	0·065	5·51	
			193·44	168·15	0·783	2·553	80·65	0·073	7·12	
			193·44	167·07	0·731	2·734	72·94	0·066	7·28	
			193·44	168·92	0·823	2·430	85·68	0·078	6·82	
							Mean ..	0·070		

This Table, besides verifying the laws of the proportionality of the friction to the pressure, and its independence of the velocity, shows that water rather increases than diminishes the friction of cast iron. We see also that tallow, somewhat hard, does not reduce the friction so much as lard.

Consequences of the Experiments.—The experiments made by Morin upon the friction proper of plane surfaces upon each other comprise 179 series, answering to different cases, according to the nature or condition of the surfaces in contact; and they all, without exception, lead to the following results;—

The friction during the motion is—

1st. Proportional to the pressure.

2nd. Independent of the area of the surfaces of contact.

3rd. Independent of the velocity of motion.

Experiments upon the Friction at Starting, or when the Surfaces have been some time in contact.—The same apparatus has served for the experiments upon friction at the start, or after a prolonged con-

tact, whose aim was to establish in what cases there is a notable difference between it and that produced during motion. This difference, which, according to the case, arises from very different causes, may in general be attributed to the reciprocal compression of the bodies upon each other, and to a kind of gearing of their elements. The time or duration of the compression probably exerts an influence upon the intensity of the resistance opposed by their surfaces to sliding. But generally this resistance reaches its maximum at the end of a very short period.

EXPERIMENTS UPON THE FRICTION OF OAK UPON OAK, WITHOUT UNGUENTS, WHEN THE SURFACES HAVE BEEN SOME TIME IN CONTACT; THE FIBRES OF THE SLIDING PIECES BEING PERPENDICULAR TO THOSE OF THE SLEEPER.

Extent of the Surface of Contact.	Pressure, Q.	Motive Effort or Friction, F.	Ratio of the Friction to the Pressure, f.
sq. ft.	lbs.	lbs.	
0·947	120·55	67·15	0·55
	282 49	150·23	0·53
	495·01	252·34	0·51
	1995·23	1171·10	0·58
	2526·65	1287·16	0·51
0·043	389·35	203·80	0·52
	402·98	212·44	0·53
	1461·08	854·77	0·58
		Mean ..	0·54

The friction seems to be proportional to the pressure, which varied from 120 lbs. to 2526 lbs., and independent of the surfaces of contact, which varied in the ratio of 1 to 22, the smallest being ·043 sq. ft., and the greatest 0·947 sq. ft.; this last value exceeds those usually employed for sliding surfaces in mechanical constructions.

The ratio of the friction to the pressure is here raised to 0·54, while it was only 0·48 during the motion, as was the result of the Table, page 1572. The friction at the start is raised then about an eighth above that which we first considered. A similar increase occurs in all similar cases.

EXPERIMENTS UPON THE FRICTION OF OAK UPON OAK, WITHOUT UNGUENTS, WHEN THE SURFACES HAVE BEEN SOME TIME IN CONTACT. THE SLIDING PIECES HAVE THEIR FIBRES VERTICAL, THOSE OF THE FIXED PIECES ARE HORIZONTAL AND PARALLEL TO THE DIRECTION OF MOTION.

Extent of the Surface of Contact.	Pressure, Q.	Motive Effort or Friction, F.	Ratio of Friction to Pressure, f.	Time of Contact.
sq. ft.	lbs.	lbs.		
·6845	432·12	184·88	0·427	5 to 6″
	432 12	184·88	0·427	10′
	432·12	157·43	0·364	1′
	696·77	354·59	0·509	6′
	696·77	304·31	0·436	30″
	696·77	342·03	0·498	8 to 10′
	882·01	405·32	0·459	8 to 10′
	1106·99	555·73	0·502	10′
	1106 99	430·03	0·388	5 to 6″
	2205·30	810 24	0·367	15′
	2205·30	882 60	0·400	10′
		Mean ..	0 434	

This Table shows that for wood the friction at the start presents for equal surfaces and pressures great differences from one experiment to another, and that the resistance attains its maximum in a short time of contact, which seems not to exceed some seconds. We, in fact, see that the figures answering to five and six seconds are not inferior to those relating to a contact of fifteen minutes, the longest of any recorded in the Table.

The mean value of the ratio f of friction to the pressure is 0·434, but it would be well in application to reckon it at 0 48 or even 0 50.

We still see by these experiments, in the following Table, that the friction at starting, as well as the friction in motion, is independent of the extent of the surface of contact, and is proportional to the pressures.

These figures, moreover, differ so little from each other, that we may place all confidence in the general mean 0·74, and employ it in all similar cases.

EXPERIMENTS UPON THE FRICTION OF OOLITIC LIMESTONE UPON OOLITIC LIMESTONE, WHEN THE SURFACES HAVE BEEN FOR SOME TIME IN CONTACT.

Surface of Contact.	Pressure, Q.	Motive Effort or Friction, F.	Ratio of Friction to the Pressure, f.	Time of Contact.
sq. ft.	lbs.	lbs.		
0·8611	314·01	228·88	0·728	15′
	330·85	239·25	0·723	15′
	1162·72	949·64	0·752	15′
	1274·93	932·87	0·731	5 to 6″
	1274·93	958·02	0·751	5 to 6″
		Mean ..	0·737	
0·4992	309·55	228·88	0·739	2′
	1257·49	983·16	0·781	10′
	1257·49	983·16	0·781	1′
		Mean ..	0·783	
Edges rounded.	298·38	228·88	0·774	2′
	602·32	442·58	0·740	5 to 6″
		Mean ..	0·757	
		General Mean ..	0·740	

EXPERIMENTS UPON THE FRICTION OF OOLITIC LIMESTONE UPON OOLITIC LIMESTONE, WHEN THE SURFACES HAVE BEEN SOME TIME IN CONTACT WITH A BED OF FRESH MORTAR.

Surface of Contact.	Pressure, Q.	Motive Effort or Friction, F.	Ratio of Friction to Pressure, f.	Time of Contact.
sq. ft.	lbs.	lbs.		
0·8611	325·66	253·98	0·780	10′
	506·08	404·87	0·800	10′
	783·98	580·87	0·740	15′
	783·98	608·22	0·773	10′
	783·98	555·73	0·709	10′
	1167·73	983·16	0·841	15′
		Mean ..	0·773	
0·4992	309·55	239·21	0·772	10′
	489·97	379·74	0·775	10′
	781·10	568·30	0·727	10′
	1164·86	807·15	0·792	15′
	1164·86	907·74	0·779	10′
	1169·27	807·15	0·690	10′
	1548·61	1159·17	0·748	15′
		Mean ..	0·745	
0·1636	319·82	254·02	0·794	10′
	500·25	304·30	0·608	10′
	791·37	480·26	0·607	10′
	1161·90	731·69	0·629	15′
		Mean ..	0·659	
		General Mean	0·735	

These experiments show that the friction at starting is for these stones very nearly the same with the interposition of mortar as without.

In recapitulating, recent trials have caused us to see that the friction at the moment of starting, and after a very short time of contact, is—

1st. Proportional to the pressure.

2nd. Independent of the area of the surfaces of contact; and that furthermore, for compressible bodies, it is notably much greater than that which takes place during motion.

Observation relative to the Expulsion of Unguents under Heavy Pressures, and by Prolonged Contact.—We have observed metallic bodies with unguents of grease or oil, under very great pressure, compared to their surfaces, and find, after a contact of some duration, that the unguents are expelled, so that the surfaces are simply in an unctuous state, and thus have double the friction of surfaces well greased. This shows us why the effort required to put certain machines in motion is, disregarding the influence of inertia, often much greater than that required for maintaining a rapid motion, and proves that, for an experimental appreciation of the friction of machines in motion, we need not, as is sometimes done, make use of the same methods as for machines starting from repose.

Influence of Vibrations upon the Friction at Starting.—Another remarkable circumstance noted in the experiments at Metz is, that when a compressible body is solicited to slide by an effort capable of overcoming the friction of motion, but inferior to the friction at starting, a simple vibration, produced by an external and apparently a slight cause, may determine the motion. Thus, for oak rubbing on oak, the friction at starting is 0·680 of the pressure, and the friction during motion is 0·480; so that, to produce the motion of a weight of 2205 lbs. it is necessary then to exert an effort of 1500 lbs., while there is only needed 1059 lbs. to maintain it. Still, under an effort equal, or a little above 1059 lbs., and by the effort of a vibration, the body may be started.

This important observation applies to constructions always more or less exposed to vibrations, and shows that, if in the calculations for machines for producing motion, we should take into account the greatest value of the friction, we should in those relating to the stability of constructions, on the other hand, introduce its smallest value, that for motion. It seems, finally, to explain how it sometimes happens that buildings, for the stability of which no uneasiness was felt, have fallen at the passing of a wagon, and how the firing of salutes from a breach battery may, at certain times, accelerate the fall of a rampart or a building.

Influence of Unguents.—Fat unguents considerably diminish friction, and the consequent wear of surfaces. But from the observations made, p. 1575, we see that though the friction is in itself independent of the extent of the surfaces, it is well to proportion them to the pressures they are appointed to sustain, so that the unguents may not be expelled. We would also remark that all the experiments in consideration were made under pressures more or less considerable, and their results should only be applied to analogous cases. In fact, we may conceive that if the pressures were so great, in respect to the surfaces, as to occasion a marked defacement, the state of the surfaces, and consequently the friction, would vary; or that, on the contrary, if the surfaces were great, and the pressures very slight, the viscosity of the unguents, usually disregarded, might then exert a sensible influence.

We would observe that, in general, and especially for metals, pure water is a bad unguent, and often increases rather than diminishes the friction.

Adhesion of Mortar and Solidified Cements.—But, for mortars which have set and acquired a proper degree of dryness, there exists a different condition of things. Adhesion and cohesion take the place of friction, and the resistance to separation becomes sensibly proportional to the extent of the surface of contact, and independent of the pressure exerted, either at the moment of rest or that of separation.

For limestones bedded with mortar of hydraulic lime of Metz, the resistance is about 2112 lbs. per square foot of surface. With other limes, undoubtedly common, M. Boistard has found 1426 lbs. With plaster, the resistance seems to follow the same law; but it varies considerably with the instant of the setting of the plaster, which seems to exert a great influence upon the cohesion.

Observation upon the Introduction of Friction and Cohesion in Calculations upon the Stability of Constructions.—Finally, we would remark that friction cannot, in the case of beddings in mortar, or in plaster, show itself until the cohesion or adhesion is overcome, and that consequently these two resistances cannot coexist. In calculations upon the stability of structures, we should only reckon upon one of these, and that the weakest.

Experiments upon Friction during a Shock.—Poisson, in his Traité de Mécanique, expresses himself in these terms;—"Though no observations have been made upon the intensity of friction during a shock, we may suppose, by induction, that it follows the general laws of friction of bodies subjected to pressures, since percussion is only a pressure of very great intensity exerted during a very short time."

To verify by direct observation the correctness of this supposition, and at the express invitation of Poisson, Morin undertook many experiments, choosing for that purpose the case of strips of cast iron sliding upon bars of cast iron spread with lard, since this had been the subject of careful study in his preceding experiments, and is the case which most frequently occurs in practice.

3048.

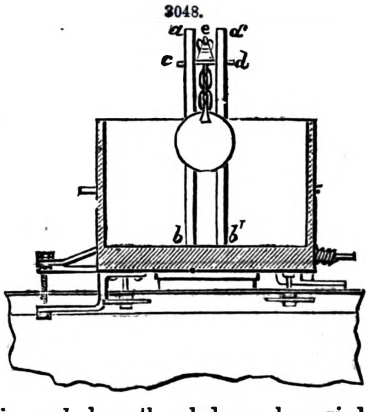

Description of the Apparatus employed in the Experiments.—The apparatus which Morin employed differs from that described in p. 1570, only in the following disposition necessary for suspending to the sled, at a desired height, the body designed to produce the shock, and allowed to fall at will during the motion.

Upon the sides of the box of the sled, Fig. 3048, are raised two frames of firm uprights $a\,b$ and $a'\,b'$, pierced with holes at intervals of ·16 ft., through which pass two iron pins; upon these pins rests a movable cross-piece $c\,d$ of oak. By raising and lowering the pins, the height of the cross-piece $c\,d$ above the sled may be varied at will. A screw e and nut passes freely across a hole cut in the middle of the cross-piece, and

bears a plier with ring legs, upon which is suspended a shell to give the shock. The two legs of the pliers are bound with strips of wick with quick match, holding them shut. By means of the screw *e* the height of the shell above the surface shocked can be exactly regulated.

We may easily conceive from this description, the box and uprights being firmly fastened to the sled, that the whole system partakes of a common motion, and that if at any instant of its course the shell falls upon the sled, it falls there with a vertical velocity due to the height of the fall, and with a horizontal velocity which, as we shall see hereafter, was sensibly the same as that of the sled. By means of the ligature of the legs of the pliers we accomplish the fall of the shell, without any external concussion or disturbance. For this purpose a man sets fire to the match, and gives the signal for the starting of the sled; combustion is communicated to the upper part which keeps the pliers closed; these open suddenly and let loose the shell, without any possibility of disturbing the common motion of the system of the two bodies.

General Circumstances of the Experiments.—The experiments were made in impressing the sled, sometimes with a uniform, and sometimes with an accelerated motion. The first of these motions was obtained at will, by giving to the descending box a weight just sufficient to overcome the friction, and in suspending under this box a shell of 110 lbs. weight, which only descended 1·64 ft. when its action ceased. As for the accelerated motion, it was produced whenever the motive weight surpassed the friction. The law of these motions was moreover determined, in each case, by means of curves traced by the style of the chronometric apparatus.

General Examination of what occurred in these Experiments.—We can readily appreciate the mode of action during the experiments. We take, for example, a case where the system of the sledge and the shell suspended above it is impressed with a uniform motion. At the instant when the combustion of the wick allows the legs of the pliers to separate, the shell is free, and falls; during its fall, until the moment it reaches the sledge, the latter being freed from the weight of the shell, acquires an amount of motion precisely equal to what would be consumed by the friction due to this weight. The horizontal velocity of the sledge, at the instant of the shock, is then a little greater than that of the shell. After this the forces of compression developed by the shock produce a friction variable as themselves, at each instant, which consumes a certain quantity of motion; so that the sledge, whose progress was accelerated during the fall of the shell, is afterwards retarded during the action of the shock.

Formulæ employed in Calculating the Results of the Experiments.—As it is desirable to prove whether the friction remained proportional to the variable pressures produced during the short intervals of the phenomena, we proceed to give some formulæ relative to this hypothesis, which we will hereafter compare with the results of experiment. We consider first the case of uniform motion, and call

Q the weight of the sledge, and the suspending apparatus of the shell;
q the weight of the shell producing the shock;
f the ratio of friction to the pressure for the surfaces in contact;
h the height of fall of the shell above the sledge;
U the velocity due to this height;
T the time of the fall;
V the horizontal velocity of the sledge and shell at the instant when the latter is let loose by the pliers;
V′ the velocity of the body after the shock;
$g = 32{\cdot}1817$ ft.

At the instant when the shell is freed, the quantity of motion of the system is $\frac{Q+q}{g}V$.

The weight of the shell, when connected with the sledge, produces a friction fq which, in each element of time t, consumes a quantity of motion fqt, and which, during the time of the fall, would consume the quantity fqT.

But since, on the other hand, the shell ceases to press upon the sledge during this time, it follows that the quantity of motion gained by the system by reason of this diminution of pressure, is precisely fqT.

At the instant when the shell reaches the sledge, the quantity of motion possessed by the system is then $\frac{(Q+q)V}{g} + fqT$.

From this instant, and during the whole period of the shock, the shell loses, in each element of time, an element of velocity, and consequently a quantity of motion $\frac{q}{g}u$, whence results a force of compression $\frac{q}{g} \times \frac{u}{t}$, producing a friction $\frac{fq}{g} \times \frac{u}{t}$. This friction consumes in an element of time a quantity of motion $\frac{fq}{g} \cdot \frac{u}{t}$, and when all relative motion in a vertical direction is destroyed, the friction due to the forces of compression has finally consumed a quantity of motion equal to $\frac{fq}{g}U$.

Consequently, when the shock has terminated, we should have between the quantities the relation $\frac{(Q+q)V}{g} + fqT - \frac{fqU}{g} = \frac{Q+q}{g}V$, or $fqgT - fqU = (Q+q)(V'-V)$.

Now, the shell falling with a uniformly accelerated motion by virtue of gravity, we have, evidently, $U = gT$, whence it follows that $V = V'$; that is to say, that in our apparatus the quantity of motion destroyed by the friction resulting from the forces of compression must be precisely equal to that which it gains during the fall of the shell.

These two effects are successive, but take place in a short interval of time, and therefore occasion in the curve of motion undulations in opposite directions, which do not affect the general law, and are scarcely appreciable, either in the draughted curve or that made from the abstract of the Table.

The Acceleration of the Motion of the Sledge during the Fall of the Shell may be neglected.—It is easy to be assured *a priori* that the acceleration of the velocity of the sledge during the fall of the shell was always very small in our experiments, though the height of the fall has reached 1·97 ft. We observe, then, from what has just been said, that calling V_1 the horizontal velocity of the sledge at the moment when the shell reaches it, we shall have $\frac{Q}{g}V + fqT = \frac{Q}{g}V_1$, whence

$$V_1 - V = \frac{fqgT}{Q} = \frac{fqU}{Q}.$$

Making, for example, $q = 110{\cdot}27$ lbs., $h = 1{\cdot}968$ ft., and $U = 13{\cdot}80$ ft., $Q = 590{\cdot}68$ lbs., $f = 0{\cdot}071$, which answers to one of the most intense shocks produced during the experiments, we find $V_1 - V = 0{\cdot}1829$ ft.

Now, the shock of the shell in the horizontal direction taking place only in virtue of this difference in velocity, we see that its effect upon the general motion should be quite insensible, and we may, as we have done in the preceding calculation, neglect its influence upon the general motion of the sledge.

Case where the Motion of the Sledge is Accelerated.—The preceding reasoning applies to the case where the system of the shell and of the sledge is impressed with an accelerated motion, and it follows that if, as we have admitted, the friction during the shock remains proportional to the pressure, the general law of motion in our apparatus cannot be affected; or, in other words, that if, before the fall of the shell, the motion is uniform or accelerated, according to a certain law, it will still be so after the shock, according to the same law. The only disturbance which will result will be sometimes manifested by undulations, which, in most cases, would hardly be appreciable. Moreover, the hardness or compressibility of the body in contact should not have any influence upon the result, and in causing the shell to fall upon the beechwood joists composing the sledge, or upon a mass of soft loam placed upon it, we should, for circumstances otherwise similar, find the same law of motion, which should be the same as though there had been no shock.

Results of Experiments.—It remains now for us to compare the results of the formulæ with those of experiments which have been made, some when the sledge was impressed with a uniform motion, and some when the motion was accelerated. In these experiments we have varied the weight of the shells imparting the shock from 26·43 lbs. to 110 lbs., or nearly 1 to 4; the ratio of the weight of the body imparting the shock to that of the body shocked, from $\frac{1}{10}$ to $\frac{1}{4}$, and the height of the fall from 0·328 ft. to 2·29 ft., or from 1 to 7. The shock was produced upon wood, and upon loam placed upon the sledge. If, then, the laws which we have admitted in the preceding formulæ are verified by experiments within such extended limits, we may conclude that they subsist for pressures developed during the shock, as well as for others without shocks.

EXPERIMENTS UPON THE FRICTION OF CAST IRON UPON CAST IRON, WITH AN UNGUENT OF LARD DURING THE SHOCK.

Weight of the Sledge.	Weight of the Sphere.	Total Pressure, Q+q.	Height of Fall of the Sphere, h.	Motive Weight during Uniform Motion.	Friction, F.	Ratio of Friction to Pressure, f.	Velocity of Uniform Motion.	Remarks.
lbs.	lbs.	lbs.	feet.	lbs.	lbs.		feet.	
492·30	26·42	518·72	0·328	41·312	39·264	0·075	2·761	
			0·328				2·624	
			0·328				2·715	No shock.
			0·984				2·643	
			0·984				2·682	
478·26	26·42	504·68	1·968	37·708	35·832	0·071	2·460	
	26·42	504·68	1·968	37·708	35·832	0·071	2·558	
	55·13	533·39	0·984	40·887	38·843	0·072	2·534	
	55·13	533·39	0·984	40·887	38·843	0·072	2·678	
	55·13	533·39	0·984	40·887	38·843	0·072	2·755	
	55·13	533·39	1·968	40·887	38·843	0·072	2·797	
	55·13	533·39	1·968	40·887	38·843	0·072	2·659	
	55·13	533·39	1·968	40·887	38·843	0·072	2·624	No shock.
	55·13	533·39	1·968	40·887	38·843	0·072	2·656	
	55·13	533·39	2·952	40·887	38·843	0·072	2·672	
	55·13	533·39	2·952	40·887	38·843	0·072	2·814	No shock.
	110·27	588·53	0·984	44·946	42·698	0·072	3·033	
	110·27	588·53	1·968	44·946	42·698	0·072	2·961	
	110·27	588·53	1·968	44·946	42·698	0·072	3·043	

Note.—The shock is produced by the fall of a cast-iron sphere upon beech joists, while the system slides with a uniform motion.

EXPERIMENTS UPON THE FRICTION OF CAST IRON UPON CAST IRON, WITH AN UNGUENT OF LARD DURING THE SHOCK.

Weight of the Sledge.	Weight of the Sphere.	Total Pressure, $Q + q$.	Height of Fall of the Sphere, h.	Motive Weight during Uniform Motion.	Friction, F.	Ratio of Friction to Pressure, f.	Velocity of Uniform Motion.	Remarks.
lbs.	lbs.	lbs.	feet.	lbs.	lbs.		feet.	
			0·98				2·829	
			0·98				2·744	
			..				2·427	No shock.
			..				2·460	
			1·96				2·576	
590·68	55·12	646·83	..	48·16	45·94	0·071	2·935	No shock.
			2·95				2·547	
			2·95				2·347	
			2·95				2·702	
			0·98				2·328	
			0·98				2·853	
590·68	110·24	700·96	1·97	52·36	49·74	0·071	2·675	
							2·853	No shock.

Note.—The shock is produced by the fall of a sphere upon a mass of loam, while this mass and the sledge slide with a common uniform motion.

We see by these Tables that the velocity of uniform motion has been the same in the experiments made with the shocks as in those without them, whatever may have been the height of the fall. This velocity, in all cases, has depended solely upon the load or total pressure of the motive weight and the state of the surfaces.

An examination of the curves of motion shows from the vibrations produced by the shock throughout the apparatus—which are felt even at the style—in what place the shock was produced, and whether it occurred in the period of its course, when the motion had become uniform, or in that when it was accelerated, the draughted curve and the abstract of the Tables afford but slight undulations, and the motion remains or becomes uniform with the same velocity.

Finally, these experiments show that in the shock the frictions due to the pressures developed are still proportional to these pressures and independent of the velocity.

Friction of Journals.—Besides the experiments previously reported upon the friction of plane surfaces, Morin has made a great number upon that of journals by means of a rotating dynamometer with a plate and style.

The axle of this dynamometric apparatus was hollow and of cast iron. It could receive, by means of holders exactly adjusted, a change of journals of different materials and diameters. Its load was composed of solid cast-iron discs weighing 331 lbs. each, whose number could be increased so as to attain a load of more than 3042 lbs. A pulley, the friction of whose axle was slight, and which transmitted the motion by the intervention of a spring, received by a belt, the motion of a hydraulic wheel, and the difference of tension of the two parts of the belt was measured by the dynamometer with the style.

Journals were from ·11 to ·22 ft. in diameter. The velocities varied in the ratio of 1 to 4. The pressures reached 4145 lbs., and within these extended limits we have proved that the friction of journals is subject to the same laws as that of plane surfaces. But it is proper to observe that from the form itself of the rubbing body the pressure is exerted upon a less extent of surface, according to the smallness of the diameter of the journal, and that unguents are more easily expelled with small than with large journals.

This circumstance has a great influence upon the intensity of friction, and upon the value of its ratio to the pressure. The motion of rotation tends of itself to expel certain unguents, and to bring the surfaces to a simply unctuous state. The old mode of greasing, still used in many cases, consisted simply in turning on the oil, or spreading the lard or tallow upon the surface of the rubbing body, and in renewing the operation several times in a day.

We may thus, with care, prevent the rapid wear of journals and their boxes; but, with an imperfect renewal of the unguent, the friction may attain ·07, ·08, or even ·1 of the pressure.

If, on the other hand, we use contrivances which renew the unguents without cessation in sufficient quantities, the rubbing surfaces are maintained in a perfect and constant state of lubrication, and the friction falls as low as ·05 or ·03 of the pressure, and probably still lower. The polished surfaces operated in these favourable conditions became more and more perfect, and it is not surprising that the friction should fall far below the limits above indicated.

These reflections show how useful are oiling fixtures in diminishing the friction, which, in certain machines, as mills with complicated mechanism, consume a considerable part of the motive work. We cannot, then, too much recommend the use of appliances to distribute the unguent continuously upon the rubbing surfaces of machines, and it is not surprising that a great number of dispositions have been proposed for this purpose within a few years. We should be careful to select those which only expend the oil during the motion, excluding those which feed by the capillary action of a wick of thready substances. These constantly drain the oil even during the repose of the machine, thus consuming it at a pure loss.

EXPERIMENTS UPON THE FRICTION OF CAST-IRON JOURNALS UPON CAST-IRON BEARINGS.

Diameter of Journals.	Nature of Unguent.	Velocity of the Circumference in 1″.	Weight of the Axle and its Load.	Ratio of the Friction to the Pressure.	Remarks.
feet.		feet.	lbs.		
0·328	Oil.	0·196 0·222 0·488 0·445 0·345	2269·4	0·082 0·082 0·082 0·079 0·079 0·081	In these experiments the oil was poured only upon the surface of the journals.
0·328	Oil.	0·212 0·262 0·409 0·488	2269·4	0·054 0·052 0·052 0·052	In these experiments the oil was poured ceaselessly upon the rubbing surfaces.
			Mean	0·053	
0·177	Oil.	0·429 0·409 0·465	2241·8	0·101 0·109 0·101	In these experiments the oil was expelled by the pressure, and the surfaces were simply very unctuous.
			Mean	0·104	
0·177	Lard.	0·190 0·268 0·328 0·393 0·445 0·465	2240·7	0·070 0·069 0·075 0·084 0·070 0·060	In these experiments the surfaces themselves supplied the lard.
0·328	Lard.	0·222 0·331 0·380 0·409 0·429	4157·	0·049 0·050 0·052 0·040 0·042	In these experiments the unguent was renewed.
0·328	Lard.	very slow. 0·150 0·238 0·321 0·321 0·380 0·492	2276·	0·037 0·039 0·025 0·026 0·035 0·026 0·832	In these experiments the unguent was continually renewed.

The examples contained in this Table suffice to show that the friction of journals is in itself subject to the same laws as that of plane surfaces; but they also show the great influence which the constant renewal of the unguent possesses in diminishing the value of the ratio of the friction to the pressure, which sometimes falls as low as ·025.

We see also that the diameter of the journals seems to have some influence upon the more or less complete expulsion of the unguent, and consequently upon the friction, so that the dimensions to be given them should not be determined from a consideration solely of their resistance to rupture.

Recapitulating the summary of the experiments which Morin has made upon the friction of journals shows that it is nearly the same for woods and metals rubbing upon each other, and that its ratio to the pressure may, according to the case, take the values given in the following Tables.

STATE OF SURFACES.

With rotten-stone and perfectly greased. *f.*	Continually supplied with unguent. *f.*	Greased from time to time. *f.*	Unctuous. *f.*
0·025 to 0·030	0·050	0·07 to 0·08	0·150

Advantage of Granulated Metals.—It is not true, as is generally supposed, that the friction is always less between substances of different kinds than between those of the same kind. But it is well generally to select for the rubbing parts granulated rather than fibrous bodies, and especially not to expose the latter to friction in the direction of the fibres, because the fibres are sometimes raised and torn away throughout their length. In this respect fine cast iron, which crystallizes in round grains, as well as cast steel, are very suitable bodies for parts subjected to great friction.

Thus, for several years past, a cast-iron packing has come into very general use for the pistons of steam-engines. If for the boxes of iron or cast-iron axles, brass continues in use, it is chiefly because it is less hard, and wears out before the axles, and because it is easier to replace a box than an axle.

Remarks upon very light Mechanisms.—In very light mechanisms, and especially with very rapid motion, the viscosity of the unguent may offer a resistance similar to that produced by friction proper; in such cases the results of experiments made under considerable pressures in relation to the surfaces of contact, should only be applied with extreme caution.

Use of the Results of Experiments.—The results obtained from the experiments of Morin are resumed in the three following Tables, which give the ratio of the friction to the pressure, for all the substances employed in construction. The first of these Tables relates to plane surfaces which have been some time in contact. The values which it gives for the ratio f of friction to the pressure, should be employed whenever we are to determine the effort necessary to produce the sliding of two bodies which have been some time in contact. Such is the case with the working of gates and their fixtures, which are used only at intervals more or less distant.

I.—Friction of Plane Surfaces which have been some time in contact.

Kind of Surfaces in Contact.	Disposition of the Fibres.	Condition of the Surfaces.	Ratio of Friction to Pressure, f.
Oak on oak	Parallel	Without unguent	0·62
	„	Rubbed with dry soap	0·44
	Perpendicular	Without unguent	0·54
	„	Moistened with water	0·71
	Wood upright on wood flatwise	Without unguent	0·43
Oak on elm	Parallel	„	0·38
Elm on oak	„	„	0·69
	„	Rubbed with dry soap	0·41
	Perpendicular	Without unguent	0·57
Ash, pine, beech, on oak	Parallel	„	0·53
Tanned leather on oak	The leather flatwise	„	0·61
	The leather on edge	„	0·43
		Moistened with water	0·79
Black curried leather or belt { on plane oak surface	Parallel	Without unguent	0·74
{ on oak drum	Perpendicular	„	0·47
Hemp matting on oak	Parallel	„	0·50
		Moistened with water	0·87
Hemp cord on oak	„	Without unguent	0·80
Iron on oak	„	„	0·62
		Moistened with water	0·65
Cast iron on oak	„	„	0·65
Brass on oak	„	Without unguent	0·62
Ox-hide for piston packing on cast iron	Flatwise	Moistened with water	0·62
	On edge	With oil, lard, tallow	0·12
Black curried leather, or belt upon cast-iron pulley	Flatwise	Without unguent	0·28
		Moistened with water	0·38
Cast iron upon cast iron	„	Without unguent	0·16*
Iron upon cast iron	„	„	0·19
Oak, elm, yoke elm, iron, cast iron, and brass, sliding two and two one upon the other	„	Spread with tallow	0·10†
		With oil, or lard	0·15‡
Calcareous oolite upon oolite limestone	„	Without unguent	0·74
Hard calcareous stone called muschelkalk upon oolite limestone	„	„	0·75
Brick on calcareous oolite	„	„	0·67
Oak on „	Wood upright	„	0·63
Iron on „ „	„	„	0·49
Hard muschelkalk on muschelkalk	„	„	0·70
Calcareous oolite upon „	„	„	0·75
Brick on muschelkalk	„	„	0·67
Iron upon „	„	„	0·42
Oak on „	„	„	0·64
Calcareous oolite on calcareous oolite	„	With mortar, three parts fine sand, and one part of hydraulic lime	0·74§

* The surfaces being somewhat unctuous.
† When the contact had not been long enough to press out the unguent.
‡ When the contact had been long enough to press out the unguent and bring the surfaces to an unctuous state.
§ After a contact of from ten to fifteen minutes.

II.—Friction of Plane Surfaces in Motion upon each other.

Surfaces in Contact.	Position of Fibres.	State of Surfaces.	Ratio of Friction to Pressure, f.
Oak on oak	Parallel	Without unguent	0·48
	„	Rubbed with dry soap	0·16
	Perpendicular	Without unguent	0·34
	„	Wet with water	0·25
	Upright on flatwise	Without unguent	0·19
Elm on oak	Parallel		0·43
	Perpendicular	„	0·45
	Parallel		0·25
Ash, pine, beech, wild pear, on oak	„	„	0·36 to 0·40
Iron on oak	„	„	0·62
		Wet with water	0·26
		Rubbed with dry soap	0·21
Cast iron on oak	„	Without unguent	0·49
		Wet with water	0·22
		Rubbed with dry soap	0·19
Copper on oak	„	Without unguent	0·62
Iron on elm	„	„	0·25
Cast iron on elm	„	„	0·20
Black curried leather on oak	„	„	0·27
Tanned leather on oak	Flatwise on edge	„	0·30 to 0·35
		Wet with water	0·29
Tanned leather upon cast iron and brass	Flatwise and on edge	Without unguent	0·56
		Wet with water	0·36
		Unctuous and wet with water	0·23
		Spread with oil	0·15
Hemp strips or cords upon oak	Parallel	Without unguent	0·52
	Perpendicular	Wet with water	0·33
Oak and elm on cast iron	Parallel	Without unguent	0·38
Wild pear on cast iron	„	„	0·44
Iron upon iron	„	„	*
Iron upon cast iron and brass	„	„	0·18†
Cast iron on cast iron and brass	„	„	0·15†
Cast iron on cast iron	„	Wet with water	0·31
Brass on brass	„	Without unguent	0·20
Brass on cast iron			0·22
Brass on iron			0·16‡
Oak, elm, yoke elm, wild pear, cast iron, iron, steel, steel and brass, sliding upon each other or themselves	„	Lubricated in the usual way with tallow, lard, soft coom, &c.	0·7 to 0·8§
Calcareous oolite on calcareous oolite	„	Slightly unctuous to the touch	0·15
		Without unguent	0·64
Muschelkalk upon „ „	„	„	0·67
Common brick upon „ „	„	„	0·65
Oak on oolitic limestone	Wood upright	„	0·38
Forged iron upon oolitic limestone	Parallel	„	0·69
Muschelkalk upon muschelkalk		„	0·38
Oolitic limestone upon „		„	0·65
Common brick on „		„	0·60
Oak on „	Wood upright	„	0·38
Iron on „	Parallel	„	0·24
		Wet with water	0·30

* Surfaces worn when there was no unguent.
† The surfaces still being slightly unctuous.
‡ The surfaces slightly unctuous.
§ When the unguent is constantly supplied, and uniformly laid on, this ratio may be lowered to 0·05.

Table II. relates to plane surfaces in motion upon each other; Table III. applies to journals in motion upon their bearings. The values given by these Tables ought not to be used except to calculate the friction of two surfaces in motion upon each other, after the period in which the coefficient of friction at the starting has been introduced.

III.—Friction of Journals in Motion upon their Pillows.

Surfaces in Contact.	State of Surfaces.	Ratio of Friction to the Pressure when the Unguent is renewed.	
		In the Common Way.	Continuously.*
Cast-iron journals on cast-iron bearings	Unguents of olive oil, of lard, of tallow, or of soft coom	0·07 to 0·08	0·030 to 0·054
	With the same unguents and moistened with water	0·08	..
	Asphalte	0·054	..
	Unctuous	0·14	..
	Unctuous and wet with water	0·14	..
Cast-iron cushions on brass cushions	Unguents of olive oil, of lard, of tallow, and of soft coom	0·07 to 0·08	0·03 to 0·054
	Unctuous	0·16	..
	Unctuous and wet with water	0·16	..
	Slightly unctuous	0·19	*
Cast-iron journals on lignum-vitæ bearings	Without unguent	0·18	†
	Unguents of oil or lard	..	0·090
	Unctuous with oil or lard	0·10	..
	Unctuous, with a mixture of lard and black-lead	0·14	..
Wrought-iron journals on cast-iron bearings	Unguents of olive oil, tallow, lard, or soft coom	0·07 to 0·08	0·030 to 0·054
Wrought-iron journals on brass bearings	Unguents of olive oil, tallow, lard	0·07 to 0·08	0·030 to 0·054
	Unguents of soft coom	0·09	..
	Unctuous and wet with water	0·19	..
	Slightly unctuous	0·25	‡
Iron journals on lignum-vitæ bearings	Unguents of oil or lard	0·11	..
	Unctuous	0·19	..
Brass journals on brass bearings	Unguents of oil	0·10	..
	Unguents of lard	0·09	..
Brass journals on cast-iron cushions	Unguents of oil or tallow	..	0·030 to 0·052
Lignum-vitæ journals on cast-iron cushions	Unguents of lard	0·12	..
	Unctuous	0·15	..
Lignum-vitæ journals on lignum-vitæ cushions	Unguent of lard	..	0·07

* The surfaces began to wear. † The wood being slightly unctuous. ‡ The surfaces began to wear away.

Application to Gates.—Let L be the horizontal width of a gate under a certain head of water, and H′ the head or height of level above a horizontal section of this gate, of a thickness h' infinitely small. The pressed surface of this element will be L h', and the pressure which it will experience will be 63·32 L H′ h'. The total pressure upon the entire surface of the gate being equal to the sum of all the similar pressures upon each of the elements, will have for its value

$$62{\cdot}32\,L(H'h' + H''h'' + H'''h''' + \&c.).$$

Now, the products L H h', L H″ h'', &c., are the moments of the elementary surfaces L h', L h'', &c., in relation to the plane of the level, and their sum is equal to the moment of the whole surface equal to L E H. Calling E the height of the gate pressed, and H the distance of the centre of gravity from the surface of the level, or the head upon the centre of the figure. Then the total pressure is 62·32 L E H, and the friction which results against the slides of this gate is 62·32 f. L E H, f being the ratio of the friction to the pressure for the surfaces in contact, a ratio whose value should be taken from the first Table, if we are to calculate the effort required to put the gate in motion.

3049.

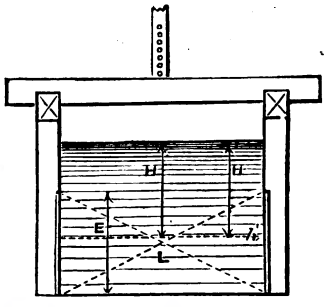

Example.—If L = 6·56 ft., Fig. 3049, E = 1·148 ft., H = 4·92 ft., the first Table gives for a wood gate of oak sliding with crossed fibres upon oak wet with water f = 0·71; we have then for the friction 62·32 × 0·71 × 6·56 × 1·148 × 4·92 ft. = 1633·4 lbs.

The effort should be transmitted in the direction of the racks fixed upon the gate; and as it is considerable, it will be proper to arrange a kind of screw-jack, suitably proportioned, for the establishment of which we may take as the effort to be exerted by a man upon the winch, at any instant, from 55 to 66 lbs. at most, and during the motion from 22 to 26·5 lbs.

When the gate is in motion, the effort to be transmitted to the racks is much less, because

the ratio of the friction to the pressure diminishes, and is reduced for a gate with moistened slides to 0·25, which gives for the friction during motion,

$$62{\cdot}32 \times 0{\cdot}25\ \mathrm{L\,E\,H} = 62{\cdot}32 \times 0{\cdot}25 \times 6{\cdot}56 \times 1{\cdot}148 \times 4{\cdot}92 = 577{\cdot}2 \text{ lbs.},$$

at the first instant, and a value decreasing with the raising of the gate, or as the head H upon its centre is lessened.

We hardly need to say that, in working the gate, we must calculate for the maximum effort.

Application to Saw-frames.—If we have, for example, the frame of a saw for veneering, subjected to a pressure of 110·274 lbs., and provided with iron strips sliding in brass grooves, greased with lard, we have, if the surfaces are well lubricated, for the friction, $0{\cdot}07 \times 110{\cdot}274 = 7{\cdot}719$ lbs., and if they are unctuous, $0{\cdot}15 \times 110{\cdot}274 = 16{\cdot}54$ lbs.

If the stroke of the frame is 3·936 ft., and the number of strokes 180 in 1′, the space described in 1″ will be 11·81 ft., and the work consumed by the friction of the frame in 1″ will be in the first case, $2 \times 11{\cdot}81 \times 7\ 719 = 182{\cdot}32$ lbs. ft. $= \frac{1}{3}$ horse-power nearly; in the second case,

$$2 \times 11{\cdot}81 \times 16{\cdot}54 = 390{\cdot}66 \text{ lbs. ft.} = \frac{2}{3} \text{ horse-power nearly.}$$

Application to Journals.—To calculate the work consumed by the friction of the journals of a revolving axle, we begin by seeking the resultant of the forces acting around this axle, and decompose this into two, the one horizontal and the other vertical, and we take separately the resultant of each of these groups. Calling X the sum of the horizontal components, Y the sum of the vertical components, the general resultant will be $\sqrt{X^2 + Y^2}$, and the friction produced by it will be $f \cdot \sqrt{X^2 + Y^2}$.

The theorem of Poncelet, already cited, informs us that when we do not know the order of magnitude of X and Y, we may calculate to nearly $\frac{1}{6}$ of the value of the radical by the formula $0{\cdot}83\,(X + Y)$, and that if we know beforehand that one of the terms, X for example, is greater than the other, which is most usually the case, we shall have the value of the radical to $\frac{1}{25}$ nearly, by the expression $0{\cdot}96\,X + 0{\cdot}4\,Y$.

Suppose, for example, that we have a hydraulic bucket-wheel weighing 88,219 lbs., transmitting a useful effect of 50 horse-power to the exterior circumference, and imparting motion to a pinion, so that the useful resistance may be horizontal and represented by Q. Suppose the radius of the wheel R = 9·84 ft., the velocity at its circumference to be 5·249 ft., and the radius of the gearing wheel R′ = 6·56 ft. The effort P transmitted to the circumference of the wheel will be

$$P = \frac{50 \times 550}{5{\cdot}249} = 5239 \text{ lbs.}$$

The pressure upon the journals of the hydraulic wheel will be $\sqrt{(M + P)^2 + Q^2}$, or, since M = 88219 lbs., and consequently M + P is greater than Q, we may take for an approximate value of the radical to $\frac{1}{25}$ nearly, $0{\cdot}96\,(M + P) + 0{\cdot}4\,Q$.

For uniform motion, the moment of the power P must be equal to the sum of the moments of resistances. We have then, in calling r the radius of the journal = 0·393 ft., $f = 0{\cdot}07$,

$$5239 \text{ lbs.} \times 9{\cdot}84 = Q \times 6{\cdot}56 + 0{\cdot}96\,(0{\cdot}07)\,(88219 + 5239)\,(0{\cdot}393) + 0{\cdot}4\,(0{\cdot}07)\,(Q \times 0{\cdot}393);$$

$$\text{whence } Q = \frac{5239 \times 9{\cdot}84 - 0{\cdot}96 \times 0{\cdot}07 \times 93458 \times 0{\cdot}393}{6{\cdot}56 \times 0{\cdot}4 \times 0{\cdot}07 \times 0393} = 7469 \text{ lbs.},$$

while if we had neglected the friction of the journals, we should have found

$$Q = \frac{5239 \times 9{\cdot}84}{6{\cdot}56} = 7858{\cdot}6 \text{ lbs.}$$

The velocity of the gearing wheel being $5{\cdot}249 \times \frac{2}{3} = 3{\cdot}499$ ft. The work transmitted to this circumference in 1″ is 7469·8 lbs. × 3·499 = 26137 lbs. ft. = 47·5 horse-power. The loss by the friction of the journals is then 50·00 horse-power − 47·5 = 2·5 H. P.

If the surfaces of the journals had not been unctuous the loss would have been double.

The space described by the rubbing points, being one of the factors of work consumed by the passive resistance, it is important to diminish it as much as possible, and consequently to give the journals only such dimensions as will ensure a proper strength.

To calculate their diameter in the establishment of the wheel, we disregard the friction, which will give us a first value of Q = 7858 lbs., a little too much, and consequently for the resultant of the efforts to which the journal is subjected, $\sqrt{(93458)^2 + (7858{\cdot}6)^2} = 93787$ lbs.

Each journal supports then nearly 46893 lbs. of pressure, and its diameter, calculated by the formula for journals of hydraulic wheels, will be $d = {\cdot}00364\sqrt{46893}$; whence $d = 0{\cdot}788$ ft.

This is the value which we have adopted in the preceding calculation.

C. Schiele's Anti-friction Curve.—This invention consists in the application of a curved form (instead of a rectilinear form usually employed) to the construction of cocks and valves, and also to the construction of axles, journals, bearings, or other rubbing surfaces in machinery in general, in order to reduce their friction and consequent wear and tear.

Fig. 3050 represents a plan and end view of a small apparatus for describing such a curve.

a a is a small wooden slide, to which the rod *b b* is jointed by means of a pin *c*. *d* is a slide or bush, to which a drawing pen is affixed, and *e e* is a ruler, along the edge of which the slide *a* is to be guided. If the slide *a* and rod *b b* be so placed that the pin *c* shall be at *f* and the pen *d* at the point *g*, the centre line at the rod *b b* will then be over the dotted line *g f*, at a right angle with the dotted line *l n*; and if the slide *a* be then guided along the edge of the ruler *e e* the pin *c* will move along the dotted line *l n*, dragging the pen *d* after it, which in travelling over a horizontal plane will describe the curved line *h m*. The pen *d* can be moved upon the rod *b* to the proper distance for the curve required, and is kept in that and in a vertical position by a spring which fits in a groove. *l n* is the axis of the curve, and *g f*, *h l*, *m n*, represent some of the tangents above mentioned.

Fig. 3051 represents a vertical section of the shell of a stop-cock, showing the application of this invention to the seats or surfaces of contact. The dotted lines near the top of the plug *a* represent a groove in the plug for the reception of a key.

Fig. 3052 represents the application of this curve to the seats or surfaces of contact of lift-valves for pumps.

Fig. 3053 shows its application to the journal and bearing of a regulator for a locomotive engine, to be used instead of a stuffing box. *a* is part of the boiler of a locomotive engine; *b* is the spindle of the regulator, and *c* is the journal; *d* is the bearing, and *e* is the lever or handle by which the regulator is turned. The spindle *b* is furnished on that end which is inside the boiler with a square hole for the reception of the squared end of a rod *g*, which has to transmit the motion to the valve.

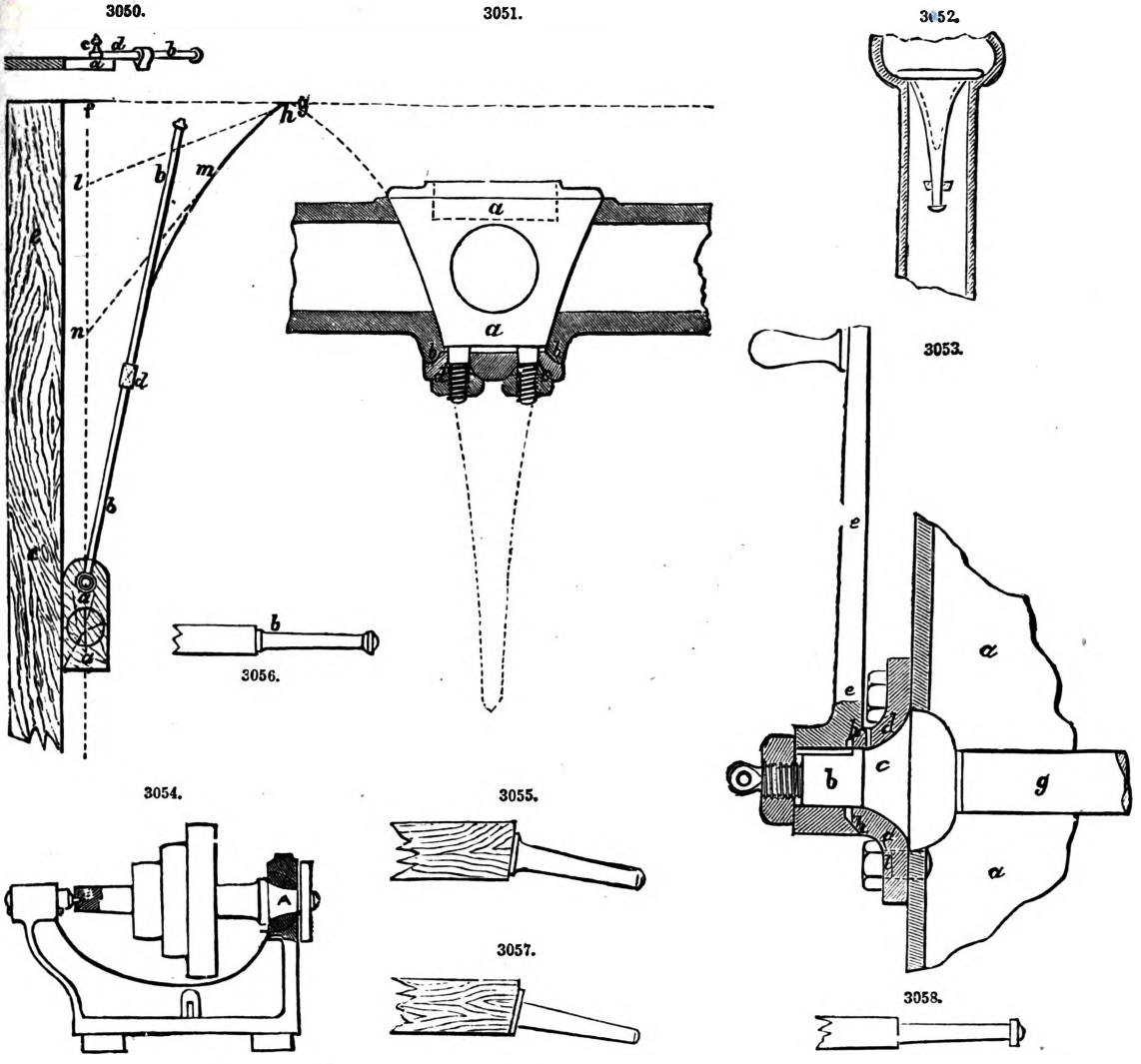

Fig. 3054 shows the application of Christian Schiele's curve to the journals and centres of turning lathes.

Figs. 3055, 3056, show the application to axles on the parts *a*, *b*, *c*. Here the pressure acts only at intervals in the direction of the axis, and must therefore be borne separately. The difference of their construction from that commonly in use will be seen on comparing Figs. 3055, 3056, with Figs. 3057, 3058.

Figs. 3059, 3060, show the application of this curve to pivots or axes for astronomical, or surveying, or other such instruments for comparison; see Fig. 3061, which shows a mode of construction now commonly in use. The curved form as shown in Fig. 3060, is also applicable to footsteps of upright shafts.

3059.

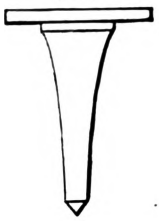

3060.

3061.

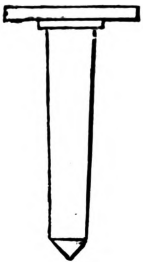

3062.

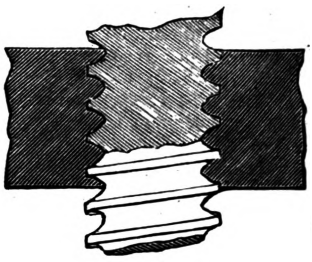

Fig. 3062 shows the application of this invention to the construction of the threads of screws. When the pressure against the surfaces to be constructed in the mode described acts in the direction of the axes of such surfaces, then Schiele commences the construction of the curve with that part which is shown in Fig. 3050 at *g*; for examples, see Fig. 3051, at *b*, *c*, and *d*; Figs. 3052, 3053, at *c*, *d*, and *i*; Figs. 3055, 3056, at *a*, *b*, *c*; Fig. 3060 and Fig. 3062. When part of the pressure acts from the side we have to commence with such a part of the curve which in its inclination to the axis would give the best resistance to the middle pressure of the combined forces; for examples, see Fig. 3051 at *a*; Fig. 3053 at *h h*; Fig. 3054 at *a* and *b*, and Fig. 3059.

Fig. 3063 shows the application of Schiele's curve to a safety-valve. Fig. 3064 to a lock-up safety-valve. Fig. 3065 to the feed-cock of a pump. Fig. 3066 a universal cock adjustable at any angle down to a right angle. Fig. 3067 the journal of a screw propeller. Fig. 3068, turning joint for pipes of oscillating engines. Fig. 3069, axis for astronomical instruments; also applicable to swing-bridges. Fig. 3070, pivot for turn-tables. Fig. 3071, pivot for shafting. Fig. 3072, pivot for sluice-doors. Fig. 3073, pivot for a journal for lathe-spindle. Fig. 3074, castor. Fig. 3075, cart axle-tree. Fig. 3076, joint of rods for boring Artesian wells. Fig. 3077, screw-collar. Fig. 3078, pivot for Archimedian screw. Fig. 3079, worm and wheel. Fig. 3080, screw-jack. Fig. 3081, pivot with anti-friction metal.

3063.

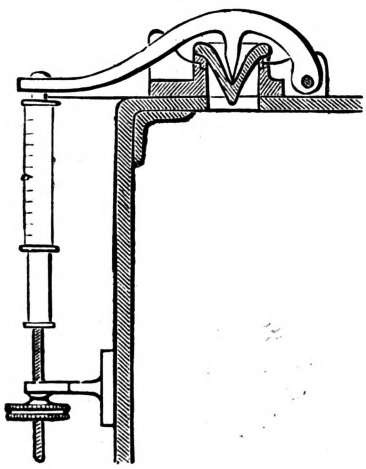

3065.

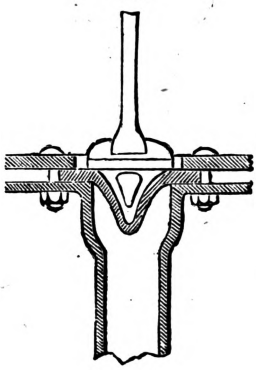

3067.

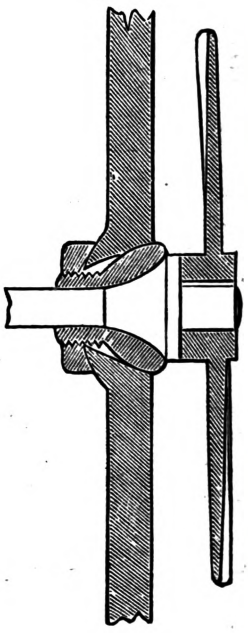

3064.

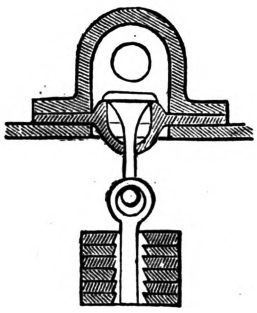

3066.

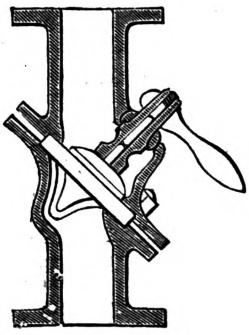

3068.

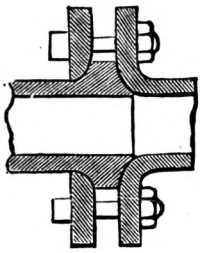

3069.

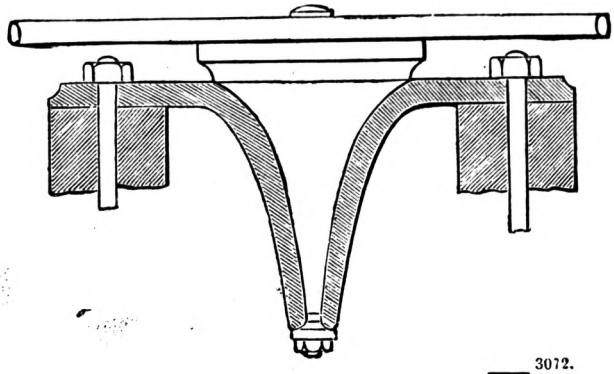

3070.

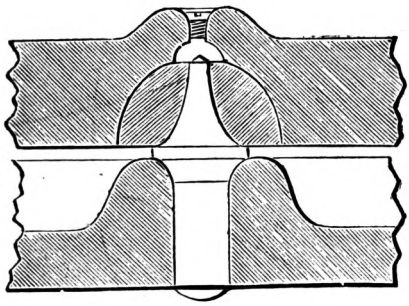

3071.

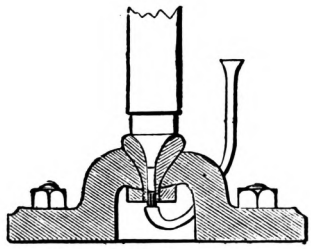

3072.

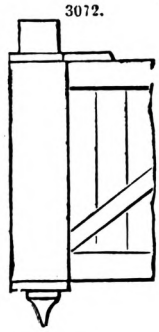

3073.

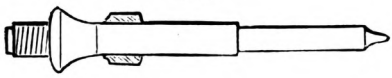

3074.

3075.

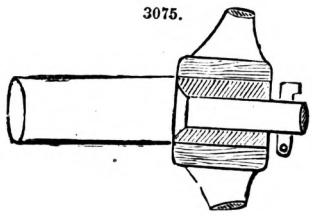

3076.

3077.

3078.

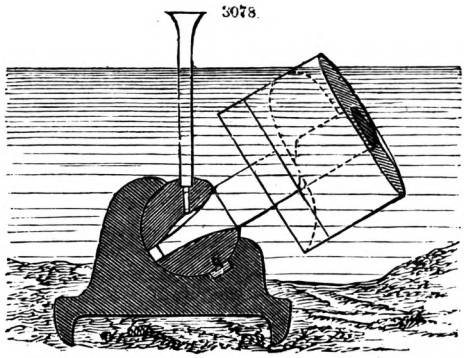

3079.

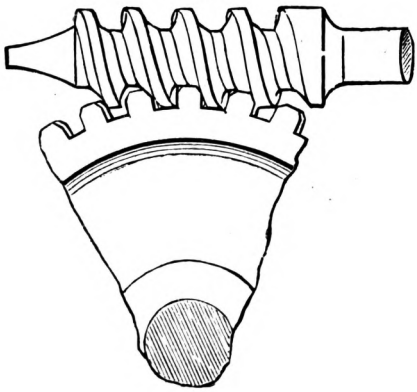

3080.

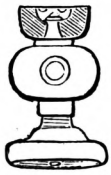

3081.

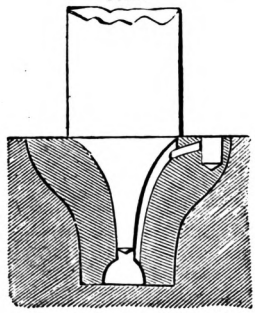

This curve, termed the anti-friction curve by Christian Schiele, is known to mathematicians as the *tractrix;* it has been erroneously identified with the *catenary*. This curve was invented by Christian Huygens and received its name from a supposition that it is the curve which would be described by a weight drawn on a plane by a string of a given length, the extremity of which is carried along the directrix A B, Fig. 3082. Euler has shown that this conclusion is wrong, unless

3082.

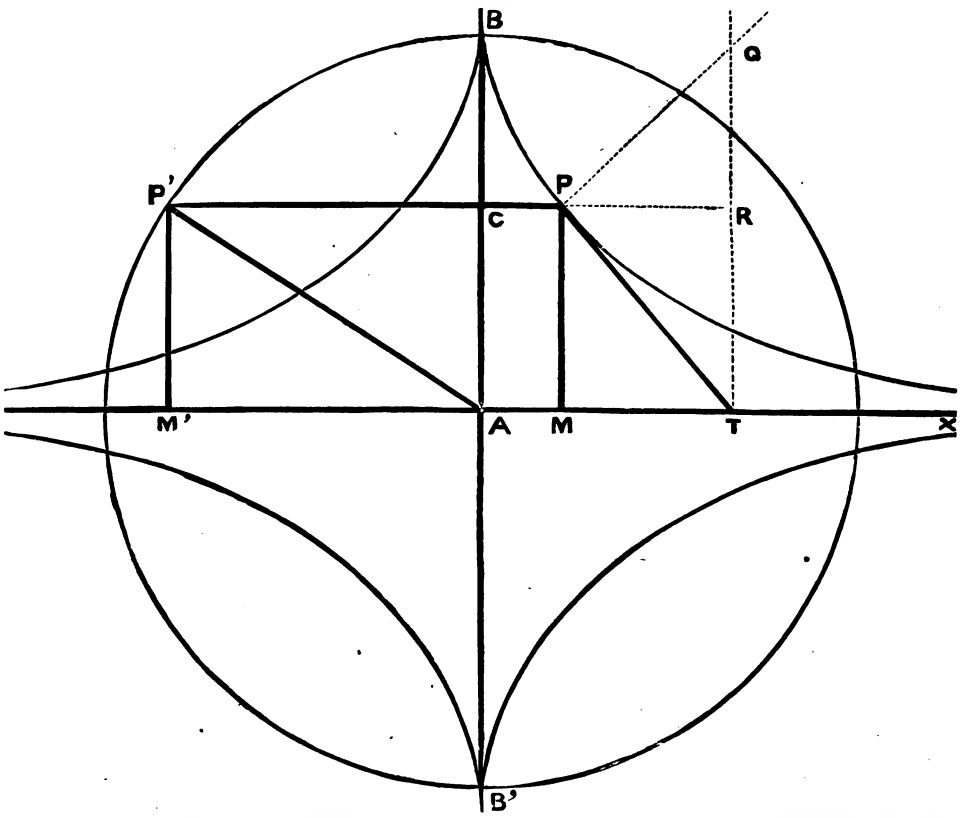

the momentum of the weight which is generated by its motion be every instant destroyed. See Euler, *Nova.* Comm. Petrop. 1784. However, to Schiele is due the credit of applying this curve to effect an important mechanical requirement.

The characteristic property of the anti-friction curve, or tractrix, is that the locus of a point T, on the tangent P T, at a given distance from the point of contact, is a straight line A X, which is called the directrix of the curve.

To find the equation to the Anti-friction Curve.—Let the intercept (P T) of the tangent between the directrix A X and point of contact P be put $= a$. Then by the general formula for the sub-tangent

$$-\frac{y\,dx}{dy} = (a^2 - y^2)^{\frac{1}{2}}\,; \qquad [1]$$

From integrating [1] we obtain

$$x = a\,\downarrow,\left(\frac{a + (a^2 - y^2)^{\frac{1}{2}}}{y}\right) - (a^2 - y^2)^{\frac{1}{2}}\,; \qquad [2]$$

In general terms $\downarrow,(y)$ is put to represent the dual logarithm of y to the base $B = 1{\cdot}00000001$; but $\frac{\downarrow,(y)}{10^3}$ corresponds with the hyperbolic log. of y to eight places of decimals. $\downarrow,(y) = \frac{\downarrow,(y)}{10^m}$, to any of the dual bases B_n or b_n, is termed the logarithm of y. Equation [1] may be found by differentiating [2], and thus verify the integration.

[2] may be put under the form

$$x = \downarrow,[a + (a^2 - y^2)^{\frac{1}{2}}] - a\,\downarrow,(y) - (a^2 - y^2)^{\frac{1}{2}}\,;$$

$$\therefore \frac{dx}{dy} = -\frac{a\,y}{(a^2 - y^2)^{\frac{1}{2}}\,[a + (a^2 - y^2)^{\frac{1}{2}}]} - \frac{a}{y} + \frac{y}{(a^2 - y^2)^{\frac{1}{2}}}\,;$$

$$\therefore -\frac{y\,dx}{dy} = \frac{a\,y^2}{a\,(a^2 - y^2)^{\frac{1}{2}} + (a^2 - y^2)} + a - \frac{y^2}{(a^2 - y^2)^{\frac{1}{2}}}\,;$$

$$\text{and} - \frac{y\,dx}{dy} - a = \left[\frac{a\,y^2}{a + (a^2 - y^2)^{\frac{1}{2}}} - y^2\right] \frac{1}{(a^2 - y^2)^{\frac{1}{2}}};$$

$$= \frac{a\,y^2 - y^2[a + (a^2 - y^2)^{\frac{1}{2}}]}{a + (a^2 - y^2)^{\frac{1}{2}}} \left(\frac{1}{(a^2 - y^2)^{\frac{1}{2}}}\right);$$

$$= - \frac{y^2}{a + (a^2 - y^2)^{\frac{1}{2}}}; \text{ consequently,}$$

$$- \frac{y\,dx}{dy} = a - \frac{y^2}{a + (a^2 - y^2)^{\frac{1}{2}}} = \frac{a^2 + a\,(a^2 - y^2)^{\frac{1}{2}} - y^2}{a + (a^2 - y^2)^{\frac{1}{2}}} = (a^2 - y^2)^{\frac{1}{2}}.$$

To find the equation of a tangent through any given point P on the Curve.—Let the co-ordinates of the given point be x, = A M and y, = M P.

$$\text{From [1]} \frac{dy}{dx} = - \frac{y}{(a^2 - y^2)^{\frac{1}{2}}}; \qquad [3]$$

Hence the equation to the straight line passing through P, and touching the curve at P, is

$$y - y_1 = - \frac{y_1}{(a^2 - y_1^2)^{\frac{1}{2}}} (x - x_1); \qquad [4]$$

The geometrical construction for applying a tangent to the anti-friction curve is obviously pointed out by [4]. With the centre A and the radius a = A B let a circle be described; through any point P of the curve let the ordinate P M be drawn, and P P′ parallel to A X, meeting the circle in P′, and let P′ A be drawn; a line P T parallel to P′ A is a tangent to the curve at P. For tangent of P′ A M′ = $\frac{y_1}{(a^2 - y^2)^{\frac{1}{2}}}$ = tangent of the angle P T M. It is evident that when $y = \pm a$ $x = 0$, therefore if A B = + a and A B′, Fig. 3082, = − a, the curve meets the axis of y at the points B, B′; and in [4], if $y_1 = \pm a$, and $x_1 = 0$, the equation becomes $x = 0$, which shows that the axis of y touches the curve at the points B, B′.

If [3] be differentiated, we have $d^2y = \frac{a^2}{(a^2 - y^2)^2} y\,dx^2$, hence, d^2y and y have always the same sign, and the curve must be everywhere convex towards the directrix.

By [2] it appears that for each value of y there are two equal and opposite values of x, and for each value of x there are two equal and opposite values of y. Therefore the four branches of the curve, included in the four right angles round the origin A are perfectly equal and similar, and such as if placed upon each other would coincide. It also appears by equation [2] that, as x increases without limit, y diminishes without limit, and consequently the directrix A X is an asymptote.

To quadrate the Anti-friction Curve, from [1] we have $y\,dx = (a^2 - y^2)^{\frac{1}{2}}\,dy$. On one side of this equation, $y\,dx$ is the differential of the area A B P M; and since $-(a^2 - y^2)^{\frac{1}{2}}$ = A M′, = P′ C, the other side is the differential of the area B P′ C, and therefore taking the integrals of both sides we have P B A M = B P′ C. Also, since the triangle P′ A M′ = P T M, the area B P T A is equal to the sector B A P′. It also follows that the whole area included by the four branches is equal to the area of the circle B P′ B′. To rectify this curve, we find from [1], $-\frac{a\,dy}{y} = (dy^2 + dx^2)^{\frac{1}{2}}$ the general expression for the length of any plane curve referred to rectangular co-ordinates. The negative sign is appended to $\frac{a\,dy}{y}$, because the length of the arc increases as y diminishes. By integration we have $-a\downarrow,(y) + C = \int (dx^2 + dy^2)^{\frac{1}{2}}$. To find the constant C, let the arc K be supposed to begin at B, so that when K = 0, $y = a$; hence $-a\downarrow,(a) + C = 0$, $\therefore C = a\downarrow,(a)$, and hence we find the length of the arc K = $a\downarrow,\left(\frac{a}{y}\right)$. If a = 3 in. and y = ·3 in.; then the length of the arc K = 6·90775527 in. For $\downarrow\left(\frac{3\cdot}{\cdot 3}\right) = \downarrow,(10) = 2\cdot30258509$; and $2\cdot30258509 \times 3 = 6\cdot90775527$ in. When K and y are given a can be found by dual arithmetic, but by no other known means.

Putting r for the radius of curvature at any point P, Fig. 3082, and substituting in the general formula for the radius of curvature the values of the first and second differential coefficients, we find $r = -\frac{a\,(a^2 - y^2)^{\frac{1}{2}}}{y}$. Hence by geometrical construction the radius and centre of the osculating circle may be found thus;—let P Q be perpendicular to the tangent at P, and produced to meet a

perpendicular to the directrix at T, the intercept P Q is the radius, and Q the centre of the osculating circle; for P M : P T :: T M : P Q, by the similar triangles M P T, R P Q.

To find the evolute of the Anti-friction Curve.—Let the co-ordinates of the centre of the osculating circle be x_1, y_1. By substituting in the general formulæ for the values of these the particular values of the differential coefficients, the results are $y_1 = \frac{a^2}{y}$ and $x_1 = x + \frac{a\,(y_1^2 - a^2)^{\frac{1}{2}}}{y_1}$. Eliminating x and y by means of these equations, and that of the curve, the result is $x_1 = a \downarrow, \left[\frac{y_1 + (y_1^2 - a^2)^{\frac{1}{2}}}{a}\right]$, which is the equation of the evolute. The evolute of the anti-friction curve of Schiele is therefore a catenary, whose parameter is a = A B, Fig. 3083, whose vertex is at B, and whose axis is A Y.

3083.

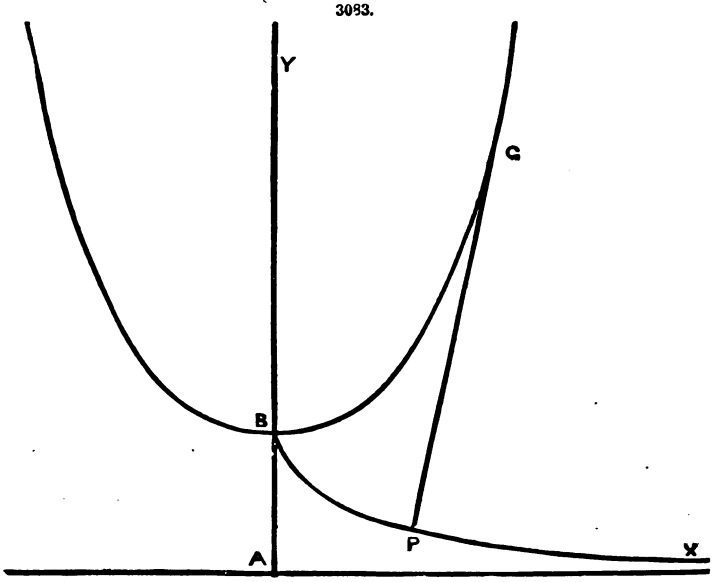

If a string P G applied to a catenary G B, have its extremity P at the vertex B, and be wound off, its extremity P will describe the anti-friction curve, in the examination of which mathematicians have blundered much. See Acceleration. Belts. Brake. Dynamometer. Gearing.

FRICTIONAL GEARING. Fr., *Engrenage de frottement;* Ger., *Frictionscheiben;* Ital., *Ruote ad attrito;* Span., *Organo de trasmision de movimiento sin friccion.*

See Gearing.

FUEL. Fr., *Combustible;* Ger., *Brennmaterial;* Ital., *Combustibile;* Span., *Combustible.*

Great quantities of combustible substances, of immense importance in metallurgy and the various arts, are found in the bosom of the earth. They are evidently produced by the decomposition of vegetables which grew in the vicinity, or the *débris* of vegetables carried down by rivers. Peat mosses exhibit, though on a smaller scale, an example of this formation; as they consist of innumerable herbaceous vegetables, spontaneously decomposed by the action of water and atmospheric air; and their various stages of alteration may be followed, from the perfectly herbaceous turf to the earthy turf presenting but few or no recognizable remains.

The vegetable structure is frequently perfectly preserved in the mineral combustibles of the tertiary formation, where pieces of wood, called *lignite*, are found still retaining their original form, but having become friable, and yielding a brown powder by pulverization.

In the mineral fuel of older formations, the vegetable structure has generally disappeared, and it forms black, brilliant, compact masses, of a schistose texture, yielding a black, or more or less brown powder; it is called *pit-coal*, or *sea-coal*, and is rare in the secondary, but very abundant in the transition formation, in the upper stratum of which they are so frequent as to characterize them by the name of *coal formation*.

In the upper strata of the transition rocks the mineral fuel, which is sometimes called *anthracite*, is generally very compact, rich in carbon, difficult to ignite, and yielding but little volatile matter by calcination. Anthracite is sometimes, though rarely, found in the superior strata, and even in the secondary rocks.

Pit-coal of the coal formation yields on calcination a great quantity of volatile substances and inflammable gases, and experiences, prior to decomposition, an incipient fusion, while the coal remaining, or the *coke*, presents the appearance of a swollen or bloated mass. Although the structure of plants can no longer be recognized in certain combustible minerals, their vegetable origin is undoubted, for in the layers of schist or sandstone which bound the layers of coal, impressions of plants are frequently found, which are so distinct and clear as to enable the botanists to detect the family to which they belong, and thus, partly, to restore the flora of antediluvial epochs.

In the tertiary rocks a mineral fuel is also found, which is soft, or easily fusible, forming irregular masses, or a kind of strata, and presenting a bearing analogous to that of the lignites,

while at other times they permeate layers of schist or sandstone belonging to various geological formations, and then seem to arise from the decomposition, by heat, of other combustible minerals contained in the earth. Some of these substances, which are called *bitumen*, contain a large amount of nitrogen, and are fetid, yielding, on distillation, considerable quantities of carbonate of ammonia. They appear to have been generated by the putrefaction of animal matter, chiefly by that of fishes, the impressions of which are frequently found in the neighbouring rocks.

Coals may be divided into five classes;—

1. The anthracites.
2. *Fat and strong*, or *hard* pit coal.
3. *Fat blacksmiths'* or *bituminous* coal.
4. *Fat* coal *burning with a long flame.*
5. *Dry* coal *burning with a long flame.*

1. Calcination scarcely changes the appearance of anthracites, as their fragments still retain their sharp edges, and do not adhere to each other. They have a vitreous lustre, and their surface is sometimes iridescent, while their powder is black or greyish black. They burn with difficulty, but generate a large amount of heat when their combustion is properly effected. In *blast furnaces* anthracites require a great blast, and those only can be used which do not soon fall to powder, as otherwise the furnace would be speedily choked. We find that anthracite is used in Wales for heating reverberatory furnaces; and it is now proper to remark, that the flame produced by the combustible under these circumstances is not owing to the combustion of the volatile substances given off by the anthracite, but rather to the combustion of the carbonic oxide formed by the passage of air through a thick layer of fuel.

2. Fat and strong, or hard pit-coals, yield a coke with metallic lustre, but less bloated and more dense than that of blacksmiths' coals. They are more esteemed in metallurgic operations requiring a lively and steady fire, and yield the best coke for blast furnaces. Their powder is brownish black.

3. Fat bituminous, or blacksmiths' coals, yield a very bloated or swollen coke, with metallic lustre, and are more highly valued for forging purposes, because they produce a very strong heat, and allow the formation of small cavities, in which the pieces to be forged can be heated. Blacksmiths' coal is of a beautiful black colour, and exhibits a characteristic fatty lustre: its powder is brown. It is generally brittle, and breaks into cubical fragments, which adhere to each other in the fire.

4. Fat coals burning with a long flame generally yield a swollen, metalloid coke, less bloated, however, than that of blacksmiths' coal. These coals are much esteemed in a reverberatory furnace, particularly when a sudden blast is required, as in puddling, and are also well adapted to domestic purposes, and are preferred for the manufacture of illuminating gas. They yield a good coke, but in small quantity, and their powder is brown.

5. Dry pit-coal burning with a long flame yields a solid, metalloidal coke, the various fragments of which scarcely adhere to each other by carbonization. This coal is also applicable to steam-boilers, and burns with a long flame, which however soon fails, and does not produce the same amount of heat as the coals of the preceding class.

The elementary analysis of combustible minerals, which easily explains their various properties, and indicates the uses to which each is most applicable, is effected like that of organic substances; but as coal is generally difficult to burn, it is necessary at the close of the experiment by which the quantity of water and carbonic acid it contains is determined, to pass a current of oxygen gas through a tube, which burns the last particles of carbon. The organic analysis of coal yields the hydrogen, carbon, and nitrogen which they contain; but it is also necessary to determine the proportion of earthy matter which exists in very various degrees in them, and which remains in the ashes after combustion.

For this purpose two grammes of the coal are ignited in a thin platinum capsule, heated by an alcoholic-lamp, and the ashes remaining are weighed. This method of incineration is difficult, and requires considerable time, only in those anthracites which do not burn readily, and it is then more easily effected if the coarsely-powdered anthracite be placed in a small platinum vessel, heated in a current of oxygen in a porcelain tube.

It is essential carefully to examine the nature of the ashes. Sea-coal of the coal formation frequently leaves argillaceous ashes, in which case there is a trifling error in the supposed composition of the fuel, because the small quantity of water always contained in clay, and which it loses at a red heat, is regarded as existing in the state of hydrogen; and this error, which is of no importance if the quantity of ashes is small, may be considerable in the opposite case. The ashes often contain, likewise, peroxide of iron, which metal generally exists in coal in the state of pyrites, and the analysis is thus inaccurate for two reasons: the proportion of ashes is valued at too low a rate, because, instead of the iron pyrites, sesquioxide of iron is weighed, the weight of which for the same quantity of iron is less; and again, in combustion by oxide of copper, the substance may yield sulphurous acid, which interferes with the determination of hydrogen and carbon. The latter cause of error is avoided by placing in the combustion-tube, in front of the oxide of copper, a column of one or two decimètres of oxide of lead, which completely retains the sulphurous acid. The quantity of pyrites in the coal may be ascertained by determining, on the one hand, the quantity of sesquioxide of iron which exists in the ashes, and, on the other, the quantity of sulphuric acid yielded by a known weight of coal, powdered very finely, and acted on by fuming nitric acid, or ordinary nitric acid, to which small quantities of chlorate of potassa are gradually added. It is evident that these determinations are necessary only when the combustible produces a large quantity of ashes, and when the latter are very ochreous.

Coal belonging to the secondary and tertiary formations often yields calcareous ashes, in which case it becomes necessary, before weighing them, to sprinkle them with a solution of carbonate of ammonia, which is subsequently evaporated at a gentle temperature. But the determination of

the carbon is generally inaccurate, because the carbonate of lime of the ashes gives off, by contact with the oxide of copper in the combustion-tube, a portion of its carbonic acid; and the oxide of copper must then be replaced by chromate of lead, intimately and largely mixed, with the coal reduced to impalpable powder, after which the carbonic acid produced by the carbonates of the ashes, which has been determined by direct weighing of these carbonates, is subtracted from the carbonic acid formed by combustion.

Coal also retains one or two per cent. of hygrometric water, which must be previously driven off by drying it in a stove at 270° or 280°.

It is necessary, in order to form a correct judgment of the nature of a combustible, to determine the weight of coke it yields by burning; and it is indispensable that this operation should always be conducted under the same circumstances, as the quantity and nature of the coke depend on the manner of calcination. The best method consists in placing 3 grammes of the coal in a thin platinum crucible, accurately covered by its lid, and rapidly heating to a red heat. The crucible is kept at a red heat for eight minutes, and after cooling without being uncovered, the coke is weighed and carefully examined.

The calorific power of fuel is calculated from its chemical composition; admitting that this power is equal to the sum of that of the carbon it contains, and that of the hydrogen obtained by subtracting from the total quantity of hydrogen that which would form water with the oxygen contained in the fuel. This hypothesis is not strictly true, but it may be admitted when the quantities of heat afforded by various kinds of fuel are only to be compared by approximation.

This comparison is generally made in another way, based on the supposition that the calorific powers of combustibles are in proportion to their reducing powers; that is, to the weight of the same oxide which they can reduce to the metallic state. An intimate mixture of 1 gramme of finely-powdered combustible and 40 grammes of litharge being introduced into an earthen crucible, 20 grammes of litharge are added, and the crucible is covered with its lid and rapidly heated to a red heat. It is allowed to cool, and, after being broken, the lump of lead is weighed, which rapidly separates from the scoria of the litharge; and it is assumed that the calorific powers of combustibles are in proportion to the weight of lead yielded by this experiment. This supposition is not absolutely exact, because combustibles yield, before attaining the temperature at which they act on the litharge, a small quantity of volatile substances possessing a reducing power—which substances are more abundant in combustibles of recent formation than in those containing a larger proportion of oxygen.

The following Table exhibits the composition of a large number of kinds of mineral fuel, taken from various geological formations, and from the kinds best marked and most extensively applied in the arts. The fragments containing least ashes have also been chosen, in order to cast no uncertainty on the composition of the combustible itself.

The Table contains, 1st, the actual composition of the coal, as afforded by direct analysis; and, 2ndly, the composition calculated by abstracting the ashes contained.

In order to see how the composition of mineral combustibles varies with their qualities in the arts and geological age, the numbers contained in the last three columns of the Table must be compared; that is, those which exhibit the composition of these combustibles after the ashes are removed. On assuming as a standard of comparison the coals of the third class, and ascending from this to those of the second, it will be found that the quantity of hydrogen is nearly the same, but that the oxygen has remarkably decreased and been replaced by carbon. On passing from the second class to the first, it will be observed that both the hydrogen and oxygen decrease, while the carbon increases in the same ratio.

Starting always from the *blacksmiths' coal*, we descend toward the fourth class, and remark that generally the hydrogen exists in greater quantity, and that the carbon decreases remarkably and is replaced by oxygen. Lastly, in the fifth class, the oxygen has still increased, and taken the place of a corresponding quantity of carbon.

Fat pit-coal may become dry in two ways: either by passing into anthracite, the hydrogen and oxygen both decreasing, and the carbon increasing in the same ratio, or by approaching the more modern combustibles, the *lignites*, the carbon decreasing and being replaced by oxygen; in which latter case the ratio between the oxygen and hydrogen increases.

By now comparing the combustibles of the secondary with those of the coal formation, it will be seen that, in the inferior stratum of the latter formation, the same variety can be distinguished. Thus, the anthracites of Lamure and Macot, which are found in the lower part of the Jurassic rocks, present the same composition as those in the transition rocks; while the coal from Obernkirchen, which also exists in the Jurassic formation, has the same properties and composition as those of the carboniferous formation. Lastly, the coal from Céral, which also occurs in the Jurassic formation, belongs, on account of its composition and applications in the arts, to the class of fat coal burning with a long flame.

The coal found in the upper stratum of secondary rocks resembles, on the contrary, the combustibles of the tertiary rocks or the lignites, which differ from the coal of the older rocks by containing less carbon and more oxygen; and as their formation approaches a modern period, their composition resembles more closely that of wood. The charcoal they yield by calcination becomes more and more dry: thus, the jet of chalk still yields a fritted metalloid coke, while the lignites of the tertiary rocks produce a non-metalloid charcoal, the fragments of which do not adhere to each other, and resemble in appearance wood-charcoal.

The bitumens, which are evidently products of distillation of older combustibles, or produced by the spontaneous decomposition of animal substances, differ essentially from coal properly so called, by containing much larger quantities of hydrogen.

See ASSAYING. BALLAST, p. 218. BLAST FURNACE. BOILER. BRICK-MAKING MACHINE. CHIMNEY. COAL MINING. COPPER. DISTILLING APPARATUS, p. 1218. ENGINES, VARIETIES OF, p. 1418. HEAT. VENTILATING AND WARMING.

Transition Rocks.

Species of Combustible.	Locality.	Nature of the Coke, and other remarks.	Density.	Coke yielded by calcination.	Elementary Composition.				Composition, the Ashes being removed.		
					Carbon.	Hydrogen.	Oxygen and Nitrogen.	Ashes.	Carbon.	Hydrogen.	Oxygen and Nitrogen.
I. Anthracites ..	Pennsylvania ..	Is found in an argillaceous transition schist; fracture vitreous; coke pulverulent	1·462	89·5	89·21	2·43	3·69	4·67	93·59	2·55	3·86
	Wales	In the lower portion of the coal formation; fracture vitreous and conchoidal; coke pulverulent	1·348	91·3	91·29	3·33	4·80	1·58	92·76	3·38	3·86
	Mayenne	In argillaceous transition schist; fracture conchoidal and vitreous; coke not adherent ..	1·367	90·9	90·72	3·92	4·42	0·94	91·58	3·96	4·46
	Rolduc	Lower part of the coal formation; fracture vitreous, but texture laminated; coke slightly adherent	1·343	89·1	90·20	4·18	3·37	2·25	92·28	4·28	3·44
II. Fat and hard pit-coal	Alais (Roche-Belle)	Coal sandstone; fracture unequal; coke metalloid; slightly swollen or bloated	1·322	77·7	88·05	4·85	5·69	1·41	89·31	4·92	5·77
	Rive-de-Gier (P. Henri) ..	Coal sandstone; fracture schistose; coke metalloid and swollen	1·315	76·3	86·65	4·99	5·49	2·96	89·29	5·05	5·66
III. Fat blacksmiths' coal ..	Rive-de-Gier, 1	Coal formation; of a beautifully black greasy lustre; very swollen metalloid coke	1·298	68·5	86·25	5·14	6·83	1·78	87·82	5·23	6·95
	Idem, 2	Coal formation; of a beautiful black; fracture more schistose; coke rather less swollen ..	1·302	69·8	86·59	4·86	7·11	1·44	87·85	4·93	7·22
	Newcastle ..	Coal formation; of a beautiful black; fracture schistose and prismatic; coke swollen	1·280	..	86·75	5·24	6·61	1·40	87·97	5·31	6·72
IV. Fat pit-coal burning with a long flame ..	Flénu of Mons, 1	Coal formation; rhomboidal fragments; coke swollen	1·276	69·8	83·51	5·29	9·10	2·10	85·30	5·40	9·30
	Idem, 2	Coal formation; less marked rhomboidal cleavage; coke swollen	1·292	..	82·72	5·42	8·18	3·68	85·88	5·63	8·49
	Rive-de-Gier (cemetery), 1	Coal formation; lustre feeble, texture schistose; coke swollen, but less brilliant	1·288	70·9	80·92	5·27	10·24	3·57	83·91	5·46	10·63
	Idem, 2	The same as No. 1	1·294	69·1	83·67	5·61	7·73	2·99	86·25	5·77	7·98
	Rive-de-Gier, Couzon, 1 ..	Coal formation; lustre more marked, texture very schistose; coke swollen, but less brilliant	1·298	64·6	81·45	5·59	10·24	2·72	83·73	5·75	10·52
	Idem, 2	Coal formation; lustre very feeble; fracture unequal, and not schistose; coke less swollen ..	1·311	65·6	80·59	4·99	9·10	5·32	85·12	5·27	9·61
	Lavaysse	Coal formation; lustre brilliant; fracture conchoidal; coke swollen and light	1·284	57·9	81·00	5·27	8·60	5·13	85·38	5·56	9·06
	Lancashire ..	Coal formation; English *cannel coal;* without lustre; fracture conchoidal; coke fritted and brilliant	1·317	57·9	82·60	5·66	9·19	2·55	84·63	5·85	9·52
	Epinac	Coal formation; lustre brilliant, texture schistose; adherent metalloid coke, but slightly swollen	1·353	62·5	80·01	5·10	12·36	2·53	82·08	5·23	12·69
	Commentry ..	Coal formation; resembling cannel coal; fracture conchoidal; metalloid fritted coke ..	1·319	63·4	81·59	5·29	12·88	0·24	81·79	5·30	12·91
V. Dry pit-coal burning with a long flame	Blanzy	Coal formation; fracture laminated; lustre brilliant; coke slightly adherent, but not swollen	1·362	57·0	75·43	5·23	17·06	2·28	77·19	5·35	17·46

		Species of Combustibles.	Locality.	Nature of the Coke, and other remarks.	Density.	Coke yielded by calcination.	Elementary Composition.				Composition, the Ashes being removed.		
							Carbon.	Hydrogen.	Oxygen and Nitrogen.	Ashes.	Carbon.	Hydrogen.	Oxygen and Nitrogen.
Secondary Rocks.	Inferior stratum.	Anthracites ..	Lamure ..	Jurassic formation: greyish black; lustre vitreous; fracture conchoidal; coke pulverulent	1·362	89·5	88·54	1·67	5·22	4·57	92·78	1·75	5·47
		„ ..	Macot	Jurassic formation. greyish black; lustre vitreous: coke pulverulent	1·919	88·9	70·51	0·92	2·10	26·47	95·90	1·25	2·85
		Pit-coal	Obernkirchen	Jurassic formation; aspect of fat coals; coke metalloid and swollen	1·279	77·8	88·27	4·83	5·90	1·00	89·16	4·88	5·96
		„	Céral	Marls of the lower oolite; aspect of coals burning with a long flame: coke metalloid and fritted	1·294	53·3	74·35	4·74	10·05	11·86	83·40	5·32	11·28
		„	Noroy	Variegated marls; of a dull black; fracture unequal; coke not adherent	1·410	51·2	62·41	4·35	14·04	19·20	77·25	5·38	17·57
	Superior stratum.	Jet	Saint Girons	Green sandstone; very brilliant; fracture conchoidal: adherent metalloid coke	1·316	42·5	71·94	5·45	18·53	4·08	75·02	5·69	19·29
		„	Belestat ..	The same as that from Saint Girons	1·305	42·0	74·38	5·79	18·94	0·89	75·06	5·84	19·10
Tertiary Rocks.		I. Perfect lignites	Dax	Of a beautiful black; fracture unequal; free from ligneous texture, coke not adherent ..	1·272	49·1	69·52	5·59	19·90	4·99	73·18	5·88	21·14
			Bouches-du-Rhone ..	Schistose; pure and brilliant black; free from ligneous texture; coke not adherent	1·254	41·1	63·01	4·58	18·98	13·43	72·78	5·29	21·93
			Mt. Meissner	Brilliant; fracture conchoidal; coke feebly adherent	1·351	48·5	70·73	4·85	22·65	1·77	72·00	4·93	23·07
			Lower Alps	Black; lustre greasy; coke slightly swollen ..	1·276	49·5	69·05	5·20	22·74	3·01	71·20	5·36	23·44
		II. Imperfect lignites ..	Greece	Laminated; of a dull black; indices of vegetable organization; coke not adherent	1·185	38·9	60·36	5·00	25·62	9·02	66·36	5·49	28·15
			Cologne ..	Umber coloured; friable; streak reddish brown; texture ligneous; coke not adherent	1·100	36·1	63·42	4·98	27·11	5·49	66·04	5·27	28·69
			Usnach ..	Fossil wood; woody texture; very hard	1·167	..	55·27	5·70	36·84	2·19	56·50	5·83	37·67
		III. Lignites passing into bitumen ..	Ellebogen ..	Compact, homogeneous; fracture conchoidal; very light metalloid coke	1·157	27·4	72·78	7·46	14·80	4·96	76·58	7·85	15·57
			Cuba	Velvet black colour; lustre greasy; coke swollen and very light	1·197	39·0	74·82	7·25	13·99	3·94	77·88	7·55	14·57
		IV. Asphaltum	Mexico ..	Black; very brilliant; strong smell; melts below 212°; coke exceedingly swollen	1·063	9·0	78·10	9·30	9·80	2·80	80·34	9·57	10·09
Alluvial Formation.		Turfs or Peats	Vulcaire ..	In a very advanced stage of alteration, though still exhibiting some remains of vegetables ..	..	..	56·25	5·63	32·54	5·58	59·67	5·96	34 47
			Long	Similar to the foregoing	..	..	57·29	5·98	32·17	4·61	60·06	6·21	33 73
			Champ-du-Feu	In a less advanced stage of alteration, though still containing some vegetables	..	..	57·00	6·11	31·56	5·33	60·21	6·45	33·34
		Wood	.. ..	Average composition	..	..	49·60	5·80	42·56	2·04	50 62	5·94	43·44

FULLER'S EARTH. Fr., *Argile smectique, Terre à foulon;* Ger., *Walkererde;* Ital., *Creta da sodare i panni.*

Fuller's Earth.—The fuller's-earth pits of Nutfield, near Reigate, are extensively worked, and supply large quantities of this substance to the clothing districts. There are two kinds, one greener than the other, owing to the presence of silicate of iron; but both exist under the same geological conditions, occurring in the lower cretaceous series, and differing little in chemical condition. Fuller's earth consists of about 45 silica, 20 alumina, and 25 water. When placed in water it almost dissolves, and when exposed to great heat it melts. It combines readily with grease, forming a kind of earthy soap, and for this reason is valuable in the manufacture of cloth made of animal fibre. The following is the mode of purifying and preparing the raw material for use;—The fuller's earth, after it comes from the pit, is baked or dried by exposure to the sun, and then thrown into cold water where it falls into a powder, and the finer parts are separated from the coarser by a method of washing in several tubs, through which the water is conducted, and where it deposits the different kinds in succession. These are used for different kinds of cloth, the coarser part for the inferior, and the fine for the better kinds of cloth. The soapy combinations formed by fuller's earth with the greasy portions of cloth during the fulling of cloth, are supposed in some measure to serve the purpose of mordants.

FUNNEL. Fr., *Entonnoir, Event, Hatte de cheminée;* Ger., *Trichter, Luftschacht, Rauchfang;* Ital., *Camino;* Span., *Chimenea.*

A funnel, possessing many advantages over those in ordinary use, invented by M. Bignon, is shown in Fig. 3084. Bignon's funnel is constructed of sheet iron. The merit of this apparatus consists in its being furnished at its lower extremity with a conically-shaped projection, which is, in fact, a screw, since it has a thread cut upon the whole of its length. The result of this arrangement is, that it will adapt itself indifferently to any sized bung-hole. At the bottom of this screw is placed a small clack-valve, which can be opened and shut as required. Fig. 3084 is a vertical section passing through the axis of the apparatus. The body E is of sheet iron, tinned inside and outside, and soldered to the upper part of the copper tube D, which has two little handles, *d d*^{1}, cast in one piece with itself, and which serve to screw and unscrew the funnel. As the tube hermetically closes the orifice of the cask, the air, which endeavours to escape from the interior, passes out through the little tube *a*, which has one extremity inside the screw-tube D, and the other outside the funnel. The lower extremity of the tube forms a seat for the valve *c*, which is attached to the central rod A, whose upper extremity passes through a socket *t*, which retains it in its proper place. The upper half of this rod has a thread cut upon it to receive the boss of the handle M, which acts upon it like a nut. The *modus operandi* is very simple and efficacious. On turning the handle M to the right or to the left, the opening or shutting of the valve *c* ensues, and the communication with the interior of the cask is thus opened or cut off, as required. There is a scale B attached to the interior of the funnel, which can be graduated to the measures of capacity in ordinary use, and which therefore registers the exact quantity of liquid poured into the cask. This is a very great advantage when it is necessary to complete the filling of a cask already partially filled, and saves the trouble of first ascertaining the quantity in the cask and then of calculating that necessary to fill the cask.

3084.

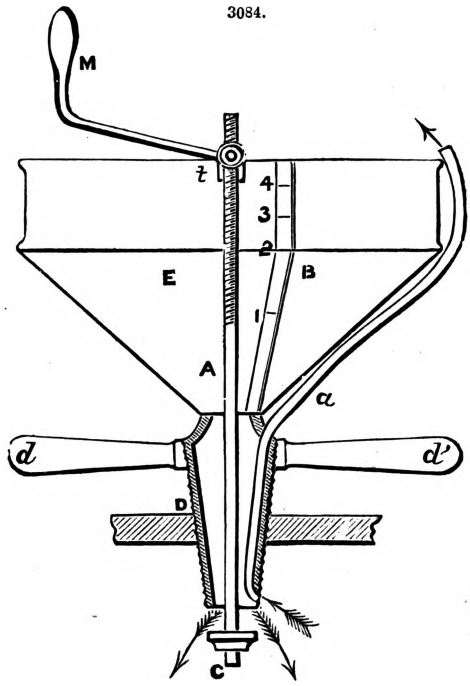

FURNACE. Fr., *Fourneau;* Ger., *Ofen;* Ital., *Forno;* Span., *Horno.*

Furnaces, or *roast-ovens*, are used for roasting ores; they differ greatly in their construction, according to the method of their use. Iron ores are roasted in ovens similar to a common *lime-kiln* of large size, and one that may serve for either roasting or burning *lime*. No fine or small ore can be roasted advantageously in an oven of this kind. For other ores than carbonates of iron, argillaceous ores, these kilns are not well adapted. Pyrites cannot be roasted in them, neither most other ores, because it is impossible to regulate the heat so as to prevent the melting of the ore; and if this happens, of course that ore is either lost or is with difficulty recovered. In roasting poor iron ores it is extremely difficult to regulate the fire so that no parts of the ore are burned dead or melted. For these reasons, kilns for roasting are not so much in use as would naturally be expected; they save fuel, but are more expensive in labour than the open heap.

Reverberatory Furnace.—This apparatus forms one of the best furnaces for roasting; but as its application is by no means general, and as the form of a roasting furnace is modified according to the kind, form, and uses of ore, we shall allude to this method when treating of those substances to which it is applied.

There is a variety of forms in the apparatuses for roasting, but we cannot perceive any advantage in the use of them; neither in the form of lime-kilns, for wood; nor cupola furnaces, con-

structed like porcelain kilns; nor large chambers, into which the flame from a grate is conducted through the ore; nor other forms of apparatus. These contrivances are not calculated for our smelt-works; they cause more labour, and absorb more capital, than a smelting business can afford.

Principles of Roasting.—Roasting means to heat a substance, a metal, or a metallic ore, or matt, to at least a red heat, or such a heat that the mineral does not melt, but only the volatile or combustible substances are expelled, and at the same time as much oxygen becomes combined with the ore as it possibly can absorb. It is therefore a principal condition, that with the heat a liberal quantity of atmospheric air, or oxygen, is admitted. In some cases chlorine, carbonic acid, carbon, or steam, is required along with the air, or in their pure conditions. In most instances, the object is merely to oxidize the ore to a higher degree, or to drive off volatile matter and in the meantime oxidize the ore, or to combine chlorine with a certain metal, as silver; or to reduce ore to metal, and evaporate the latter, which is the case with *arsenic*, *zinc*, and *antimony*.

The operation proceeds faster when the ore is fine than when it is coarse, because more surface is offered to the oxidizing agent; but this method includes the motion of the particles, so as to expose their various sides to the heat. It is not always necessary that the ore should be a fine powder; but it is of great advantage to have it in pieces of uniform size, because the action of heat and air is more regular, and the surfaces acted upon are larger. In roasting more or less fine powder, it should be stirred and moved while hot. The melting of the substance must by all means be prevented, for in that case neither evaporization nor oxidation can be accomplished. In the large operation, and in the reverberatory furnace, the melting of any kind of substance which is to be roasted is easily prevented. Roasting is always applied to oxidize iron ores, in order to obtain the highest degree of oxidation. A simple oxidation is performed when magnetic ores are exposed to heat and air, and transformed into peroxide. Chlorides are produced when, for instance, hot silver ore is brought in contact with chlorine, or a salt of chlorine, such as common salt; the roasting operation is here performed to reduce the oxide. When arsenic is to be evaporated, we put carbon in the mixture, and produce metal, which is more easily evaporated than its oxide. An evaporating, roasting process, is that which is performed on hydrated oxides, when only water is evaporated; a compound operation is performed when evaporation and oxidation are produced at the same time. In roasting pyrites, blende, and arseniurets, the volatile substances are driven off by heat, and the remaining metal is at the same time oxidized, which is brought, in most instances, to the highest degree of oxidation.

The affinity of the metals for other substances than oxygen, and the form in which these combinations appear, modify the process of roasting considerably. We shall allude to these particulars in the proper places; but it may be right to state here some general circumstances which have a bearing upon the subsequent operations. Iron cannot by any means be entirely freed from sulphur, phosphorus, or arsenic, by roasting; the presence of the vapours of water facilitates the expulsion of these substances, but the roasted ore never can be made entirely free from them. Blende, or sulphuret of zinc, is extremely slow to oxidize, and never can be purified from all the sulphur. Sulphuret of bismuth is equally slow of oxidation, not for want of affinity for oxygen, but because it is so highly fusible that its melting cannot be prevented. Sulphuret of copper is easily purified from all its sulphur. Galena is of very difficult oxidation, almost as much so as bismuth. Sulphuret of silver is easily liberated from its sulphur, and forms metal; the same is true with gold. Mercury acts in a similar manner, but it requires some caution to avoid evaporating the sulphuret of mercury with the sulphur. Sulphuret of antimony is of difficult oxidation, because it is extremely fusible. Sulphuret of arsenic is easily decomposed, but the result of the oxidation evaporates; the arsenious as well as the sulphurous acid both evaporate. The sulphurets of nickel and of cobalt are easily oxidized, and form pure oxides. Phosphorus and arsenic act in a similar manner as sulphur, and what applies to the latter applies to the former, with slight modifications. Phosphoric acid is more permanent than sulphurous acid, and silver cannot be entirely freed from arsenic if once combined with that substance.

In quartz-crushing establishments generally, the assays of ores and tailings may be conveniently conducted in the furnace employed for retorting and melting, which is generally of sufficient size to admit of three or four fusions being carried on at the same time. In regular metallurgical laboratories, for the sake of durability, and to prevent the cracking of the brickwork, the outside of the melting furnace is usually secured by iron plates, as shown, Fig. 3085, which represents that employed by F. Claudet, and in which A A′ are the fire-places, B B′ the fire-bars, and *b b′* the ash-pits. The dampers C C′ permit of regulating the draught, and the mouths of the furnaces are closed by the hinged doors D D′, lined with baffle-plates. Instead of hinged doors, sliding plates are sometimes employed, and are, for general purposes, probably preferable. The dimensions of this furnace are, 10 in. square and 16 in. in depth above the fire-bars, which can, when necessary, be drawn out from the front for the purpose of allowing the coke to fall into the ash-pits *b b′*, or for unclinkering the grate. When used with charcoal, the crucibles must be supported on the bars on pieces of fire-brick; but when coke is employed, it has in itself sufficient resistance to allow of their being imbedded in the fuel without any other support.

The whole of the work lead produced at Pontgibaud is purified before it can be treated by Pattinson's process, and this is done by exposing it at a low red heat to partial oxidation in a *reverberatory furnace* specially adapted for that purpose. The chief impurity contained in the lead is antimony; the others are sulphur, iron, arsenic, and copper. All are in relatively small proportion, but are still in sufficient quantity to render the lead *hard*. The accompanying drawings, Figs. 3086 to 3088, show the arrangement and dimensions of the furnace employed.

Fig. 3086 is an elevation; Fig. 3087 a horizontal section at the level of the top of the pan; and Fig. 3088 a vertical section through the tap-hole. The fire-place A is separated from the pan B by a bridge 3 ft. 3 in. wide, and the furnace is provided with two doors *b*, through which the dross may be removed. In principle this resembles the ordinary softening furnace with its cast-iron pan,

but its greater size and solidity of construction render it much more economical than the furnaces usually employed for the purpose.

On reference to the drawing it will be remarked that the pan is not only much larger than those

3085.

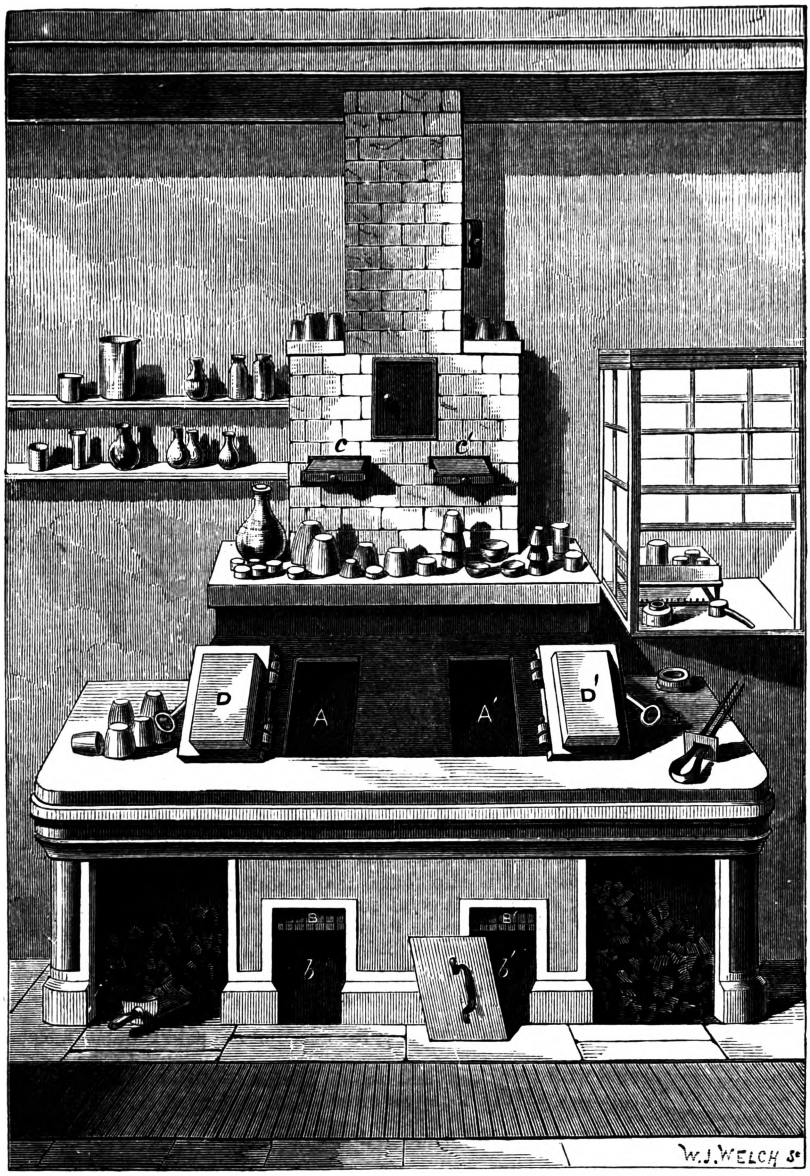

3086.

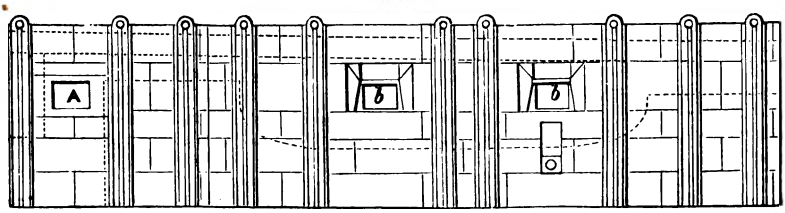

Improving Furnace.

commonly employed, but has also a rounded form; the object in giving it this shape being to diminish the tendency to crack, to which all square-sided pans are so liable. Another essential feature in the construction of these furnaces is to make them perfectly lead-tight, in case the iron

should break. This is most effectually done by setting the pan on a bottom of well-beaten brasque 2 ft. in thickness, resting on a solid foundation of masonry. The sides of the furnace must be either of thick iron plates or of large cut stones. In either case the space between them and the pan should be at least a foot wide, and well filled with hard-beaten brasque.

3087.

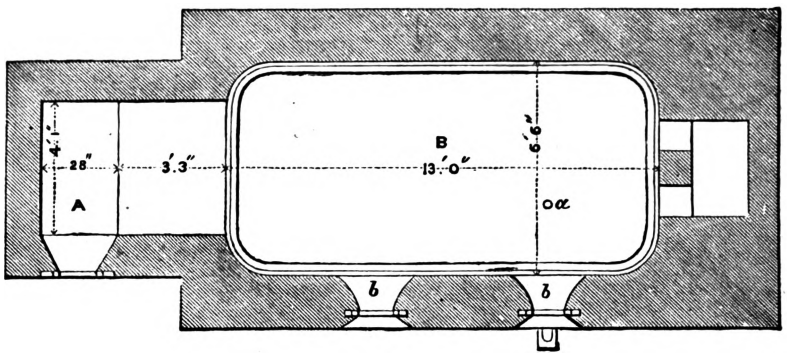

The lead is tapped from the pan through a small hole *a*, ¾ of an inch in diameter, bored in the bottom of the pan, and communicating with a thick cast-iron tube *b'*, fastened to it by means of stud-bolts, screwed into about half the thickness of the metal. Before charging, the hole in the bottom is plugged by a long pointed bar passed through an opening *c*, Fig. 3088, in the roof, corresponding with the tapping hole, and placed vertically over it. This bar will not generally stop the hole quite tight; especially after the furnace has been working a long time. The tube is, therefore, partly filled with bone-ash, firmly rammed in, a bar having been previously placed in the tube in such a way that the channel left, after its withdrawal, shall correspond with the hole in the pan. This horizontal bar is even more necessary than the vertical one; the use of the latter being to take off the pressure of the lead in the pan, and regulate the flow of metal in tapping. The horizontal bar is put in and withdrawn by the aid of a sledge; in much the same way as, though more easily than, a tapping bar at the blast furnace.

3088.

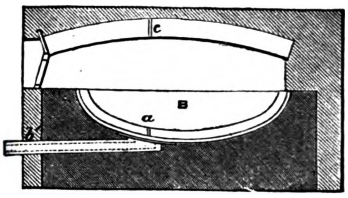

Both improving pans were originally lined with bricks, as shown in Figs. 3087, 3088, to protect the iron from corrosion by the oxides formed on the surface of the metallic bath. This precaution is now thought to be unnecessary; all that is required being to avoid overheating the furnace, and the consequent fusion of the dross. It is also found that a dull red heat is the best temperature for calcining Pontgibaud lead; and at that point the oxides neither melt nor exert any corrosive action on the pan, especially if a little lime be from time to time added. The usual charge of a pan without lining is about 20 tons. The brick lining diminishes its capacity by about one-fifth. A charge of 20 tons of common work lead requires sixty hours to become sufficiently soft for treatment by Pattinson's process, the whole time necessary for the operation, including charging and discharging being three days.

Three men are employed in filling and emptying the pan, and are paid 2 francs each per charge. The pigs of lead are introduced through one of the working doors by means of a long charging bar, and the charging is effected with great ease and rapidity. Except for charging and discharging scarcely any labour is required, as the firing is attended to by one of the men working at the Castillian furnace.

An ordinary month's work at this furnace is as follows;—

Work Lead in. Tons.	Soft Lead out. Tons.	Percentage of soft Lead obtained.	Dross. Tons.	Coals consumed. Tons.	Lime used. Kilos.
139·150	131·528	94·7	8·675	11·560	554

The process of treating lead ores by metallic iron is chiefly employed for smelting galenas containing a considerable amount of silicious gangue. The reduction of galenas rich in lead, of which the matrix is chiefly calcareous, and which generally contain but a small amount of silver, is often effected by first roasting on the hearth of a *reverberatory* furnace, and a subsequent fusion in the same apparatus.

In this case the metal is obtained by the double decomposition which takes place between the undecomposed sulphide of lead and those portions of the ore which have, by roasting, been converted into oxide and sulphate of lead. In this way the decomposition of one equivalent of sulphide of lead, and two of the oxide of the same metal, give rise to the production of an equivalent o sulphurous acid, and the liberation of three equivalents of metallic lead,

$$PbS + 2\,PbO = SO^2 + 3\,Pb.$$

In the same way, the fusion together of one atom of sulphide of lead and one of sulphate, results in the formation of two equivalents of sulphurous acid, and the liberation of two of metallic lead,

$$PbS + PbO, SO^3 = 2\,SO^2 + 2\,Pb.$$

The presence, however, of a very small proportion of silicious or argillaceous gangue renders the application of this principle extremely difficult, since when contained in the ores to the extent of only from 12 to 15 per cent., no metallic lead can be obtained in the reverberatory furnace by these reactions. As before stated, lead ores containing a large amount of silver cannot be advantageously enriched by mechanical treatment beyond a certain moderate percentage; and it is consequently usual, in smelting such minerals, to fuse them either in the raw state, or, after a partial roasting, with an admixture of metallic iron. The iron in this case, by combining with the sulphur of the galena, liberates the lead, and sulphide of iron is produced. When ores only partially roasted are operated on in this way, the intermediate reactions are of a somewhat more complicated character; but the final results, as far as regards the liberation of lead, are the same.

At Clausthal, in the Hartz, the ores usually contain about 30 oz. of silver a ton, and the furnace mixture consists of hand-selected and washed ores, to which are added certain secondary products, and a small proportion of granulated cast iron.

The charges are composed as follows:—

Hand-picked and washed ores, containing 55 per cent. of lead, 34 parts; old cupel bottoms, saturated with litharge, 4 to 6 parts; impure litharge from cupel, 1 part; slags from a previous fusion, or from the treatment of roasted matt, 39 parts; granulated cast iron, 4½ parts.

The fusion is conducted in a *blast* furnace, varying from 18 to 20 ft. in height, and having a width at the boshes of about 3 ft. 6 in., Figs. 3089 to 3091: Fig. 3089 being a vertical section at right angles to the tuyeres; Fig. 3090 a section through one of the nozzles, and Fig. 3091 a horizontal section above the breast-pan.

3089.

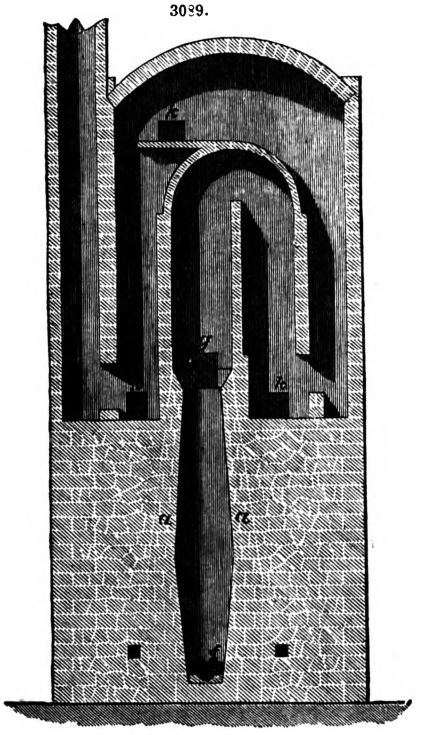

Clausthal Furnace. Vertical Section.

3090

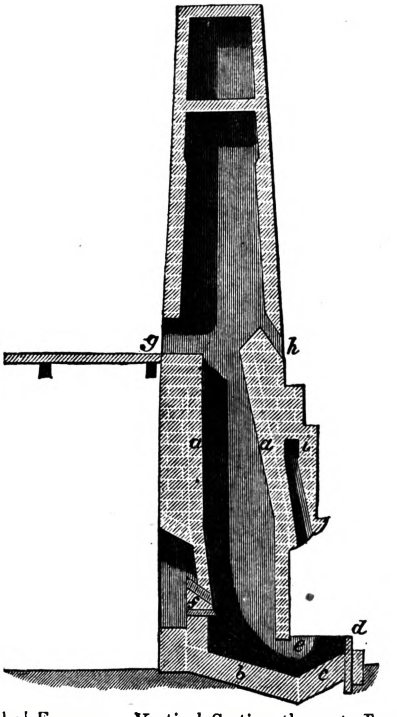

Clausthal Furnace. Vertical Section through Tuyere.

The casing walls are of common masonry, but the interior lining *a* is of fire-brick; the bottom *b* and breast-stone *c* are of sandstone, the breast-pan itself being supported by iron plates *d*. The brasque of which it is formed extends under the front wall of the furnace into the interior, and a communication is thus established by which the metal and liquid slags can flow into the pan *e*; the tuyeres *f* are placed in the back wall, and have a slight inclination downward, and also towards each other. At top, on a level with the charging hole, the form of this furnace is circular; at the level of the tuyeres it is a parallelogram, with truncated angles; and at the bottom, a square. The distance between the back and front walls is, at the tuyeres, 4 ft., and the width, 2 ft. 6 in. The diameter of the charging hole is 2 ft.

3091.

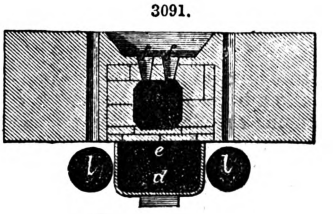

Clausthal Furnace.
Horizontal Section through Tuyeres.

This furnace is fed through the back by the opening *g*, and the small aperture *h* enables the workmen to instantly perceive the appearance of any flame which may escape at the top; it being

essential, in order to avoid an undue waste of lead, to keep the charging hole constantly dead. The arrangement of the flues and condensing chambers is seen, Figs. 3089, 3090. The side flue *i* is connected with the projecting arch or mantle, and is for the purpose of carrying off any arsenical or other vapours that may arise from the breast-pan *e*. In the back wall of the furnace are small iron doors *k*, for the convenience of cleaning out the various deposit chambers and flues. On each side of the breast, on a level with the floor of the establishment, is a float or tapping pan *l*, into which the liquid metal is from time to time run out; whilst the slags flow off in a continuous stream from a notch in the iron plate supporting the brasque which forms the breast.

The ores are chiefly charged along the wall in which are placed the tuyeres, whilst the fuel is principally spread in the vicinity of that which is opposite to them. The blast, passing through the tuyeres, and coming into immediate contact with the liquid slags in the body of the furnace, so cools them as to form a tubular elongation or nose. This is so managed by the smelter as to extend from 5 to 6 in. beyond the tuyere. When the basin and hearth have become full of matt and metallic lead, a plug of clay is removed, and their contents are run off into one of the floats *l*, where they are allowed to remain until the matt begins to solidify, when it is removed in discs, as before described, and the metallic lead ladled into moulds ready for desilverization.

Thomas' Smelting Furnace, Figs. 3092 to 3094. The chief object of the inventor of this furnace is to construct air or blast furnaces which will the better withstand the action of heat and scouring fluxes in the melting of iron, copper, or other metals, or in the smelting of their ores. The main features of this invention, in addition to the general arrangement of the parts, are the construction of water-boshes, and the employment of spikes on the water-boshes. Fig. 3092 shows a sectional elevation; Fig. 3093 a similar view at right angles; and Fig. 3094 a sectional plan of one of these furnaces.

3092.

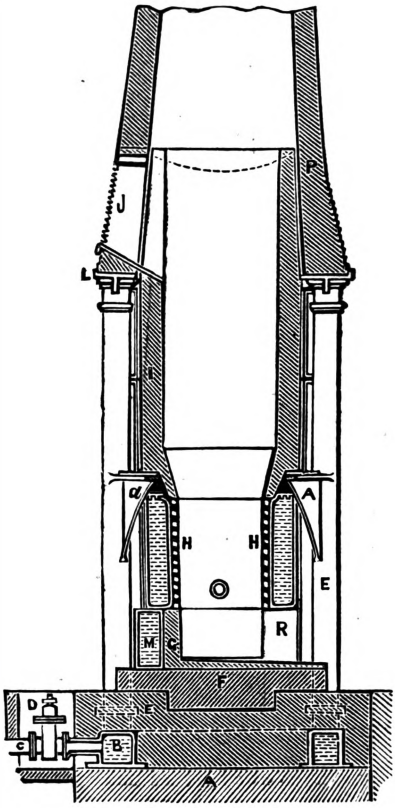

3093.

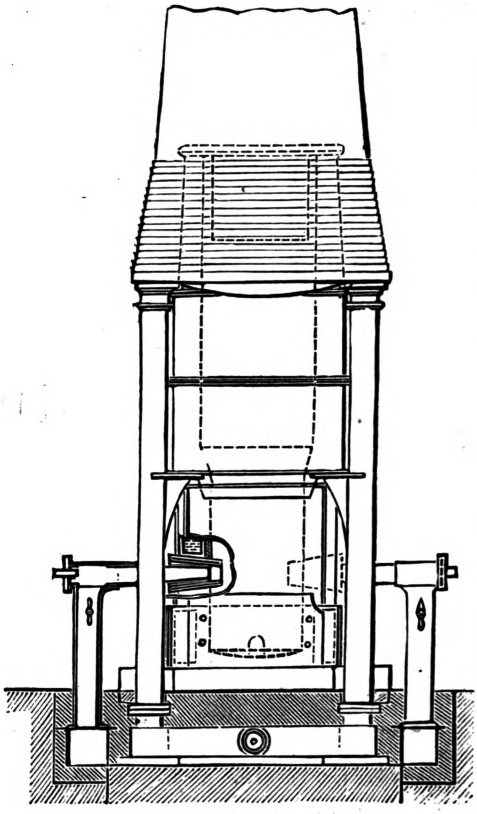

For a cupola or blast furnace John Thomas first makes a foundation A, and fixes therein a water-pipe B, which passes completely round the furnace, except at the front. There is a branch C to this pipe, to let the water in, the branch being provided with a valve and a valve-well D. There is also a branch at each corner of the pipe, upon which is fixed the hollow columns E E. These columns are closed at the top, and an entablature is fixed on them, on which the chimney is built. The water is let into the foundation-pipe B from a high level, so as to rise and fill the columns E E, the use of the columns being to hold water and carry the chimney. Brackets *a a* are cast on the columns to carry the plates O, which hold the upper brickwork of the furnace. Upon the foundation Mr. Thomas builds, as usual, up to the bottom of the furnace, as shown at F. He then places water-boshes M M, of cast or wrought iron, all round the furnace, except at the front, where there is a door R, as is usual in cupola furnaces, or a dam, as in blast furnaces. These boshes are set back 4½ in. from the face of the furnace inside, to allow of a thickness of lining G of fire-brick. He then places another tier of water-boshes N above those just described; these upper boshes go all round the furnace, or on all four sides. They have spikes *b b* cast all over their inner sides,

similarly to iron-founders' loam-plates; these spikes may be of any suitable length, but 1½ in. is found to be sufficient for most purposes. The upper boshes against the spikes are lined with stiff mortar H H, made of refractory material, such as ganister and fire-clay, or road grit and fire-clay. On the brackets *a a* of the columns are placed the iron plates O O, which enclose the four sides. These plates reach nearly to the charging door J of the furnace. On the bottom edge of these plates there is a flange for carrying the brickwork I of the furnace. independently of the boshes N, so that if a bosh fails it can be taken out and another introduced without pulling down the brickwork.

3094.

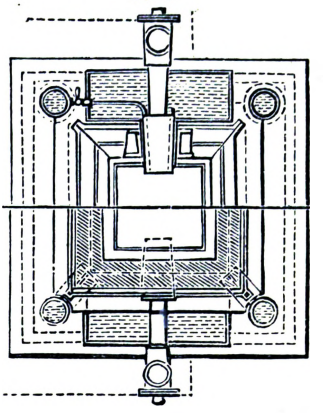

The inside of the furnace is next built up from the top of the boshes with fire-brick, or other refractory material. The boshes M and N are filled with water drawn from the columns E E by a pipe connected with the bosh and the columns; each of these pipes has a tap to regulate the supply. A hole is cast through the side boshes for inserting the tuyeres *c c*; there are water-tuyeres also supplied from the columns E E, as shown in Fig. 3094. The inside of the furnace is similar in form to a blast furnace, larger at the upper part than at the bottom, and the crucible or lower part is made tapered. This form of furnace is best adapted to hold up the material under treatment, in order that it may be melted above the blast, and fall like rain-drops, and gravitate through the fluxes. If desirable, the lower boshes are spiked and brought forward to the face of the furnace, and lined against the spike, the same as the upper boshes. The principal novelty in this invention is the spiked boshes which hold up the lining, which cannot be fluxed away on account of the water in the boshes keeping the back of the lining comparatively cool. For air or reverberatory furnaces for smelting copper or other ores of metals, the bed of the furnace is built in the usual way up to within 4 in. or 6 in. of the bottom. The spiked water-boshes are then set around the sides and bridge of the furnace, and the spikes lined up against, as in the cupola or blast furnace. For a puddling furnace for puddling cast iron into wrought iron, the spiked water-boshes are set round the sides and bridge of the furnace, as in the copper-smelting furnace.

Brückner's Process for Chloridizing Silver Ore.—This process has been successfully introduced into the silver districts of Colorado, and a large percentage of all the silver produced in that territory during the last three years has been extracted by its use. The process has lately been so much improved that it offers decided advantages over the old plan of roasting and reverberatory furnaces. The expenses for labour and fuel are thereby very considerably reduced, and the roasting is done to a greater perfection and in a shorter time than in the reverberatory. One man can at a time attend to from six to eight of the furnaces by which the process is performed.

Brückner's furnace consists of a cylinder of boiler iron, lined in a durable way with strongly-braced brickwork, and made to revolve between a fire-box and a flue; from the fire-box the flame and air pass through a pipe into the cylinder, and from there, together with the gases produced in roasting, into the condensing chambers, from which the latter escapes through a smoke-stack.

A diaphragm made of cast-iron pipes is set at an angle of about 15° to the axis of revolution, and extends diagonally through nearly the whole length of the cylinder, for the purpose of moving the ore from end to end of the cylinder, thereby exposing it to the action of heat and atmospheric air in a very uniform manner, and performing mechanically the work of transferring the ore from the cooler ports, nearest to the flue, to the hotter, nearest to the fire-bridge, and *vice versâ*, which labour, by the old process, has to be performed by hand once every hour.

As the partition does not pass through the whole length of the cylinder, the latter is provided at each end with several flanges, set at an angle of about 45°, for the purpose of conveying the ore within the reach of the diaphragm.

The operation of the cylinder may be learned by any person in a few days, and is as follows;—A charge of 3000 lbs. of silver ore, and 150 to 300 lbs. of salt, is introduced through a man-hole into the cylinder, the inside of which has previously been heated to red heat, the opening closed, some more fuel thrown into the fire-box, and the cylinder made to revolve at one-half to one revolution a minute. The fire in the fire-box is so regulated that after one hour's time the sulphur contained in the ore commences to burn. Then the fire is so regulated that the ore is kept all the time at a dark red heat, gradually increasing to red heat. Very little fuel, and in ores containing much sulphur no fuel at all, is required until most of the sulphur has been oxidized; but then some more fuel is added in order to gradually increase the temperature of the ore pulp to an intense red heat. The pulp soon assumes a spongy, woolly consistency, in consequence of the mutual decomposition of the sulphates, formed in roasting, and salt, chloride of sodium, and of the chlorine gas being evolved; and after one hour's time, or as soon as a sample taken from the furnace evolves pure chlorine, and no sulphurous smell can be perceived any more, the chloridizing roasting is completed. Then the man-hole plate is removed, and while the cylinder is kept revolving the ore is made to drop through a grate into a screw conveyor, which conveys it through an iron trough kept cool from the outside by water. By this mechanical contrivance, the formerly so expensive, tedious, and unhealthy process of cooling the ore on a large cooling floor is done away with, and is performed to perfection, and without any additional labour, within fifteen minutes' time, since the ore by this process is by machinery directly carried into the screen and the hopper ready for further treatment.

Besides the last-named improvements, the inventor has also made some additional improvements for the purpose of increasing the working capacity of the cylinders, and to prevent at the same time all losses resulting from fine particles of ore and volatile chlorides from being carried off by the

draught. It must be borne in mind that the greater the quantity of atmospheric air which comes into contact with the heated ore the quicker the roasting process is performed.

The arrangement consists in the use of a steam suction-pipe set, in the direction of the draught, into the flue between the cylinders and the condensing chambers; said pipe being arranged in such a manner that the draught through the furnace is considerably increased, and all volatile matter condensed and collected at the bottom of the chambers provided for this purpose.

This furnace can be used for roasting any kind of refractory silver ore; also for desulphurizing auriferous pyrites previous to chlorination or smelting; for roasting ores of zinc, lead, copper, &c.; also for burning cement, and for the manufacture of soda from cryolite.

The Stetefeldt Furnace.—This invention is one of the most important steps of progress yet achieved in silver metallurgy; and its direct effects in stimulating the production of bullion, by reducing its cost, will be felt immediately. Already the mines of many a half-abandoned district are augmented in value and importance by the mere announcement of its success.

The following description of the Stetefeldt furnace is from the notes of the inventor himself, and from the records of actual experience at Twin River, Reno, &c.

Since the discovery and exploration of the numberless mineral deposits in the Western States and Territories, no branch in metallurgy has received so much attention as the process of roasting ores of all descriptions. One can hardly look over a file of mining journals, or newspapers from some mining district, without finding descriptions of new devices for roasting ores, all of which claim to surpass everything else in this line which was known before. The devices are as strange as they are many, and much time and money have been wasted to test impracticable inventions. Indeed, the high expense which the roasting in the old reverberatory furnace entails was a strong inducement to invent some cheaper, and at the same time more effective, method. This is especially of importance where silver ores are found which require a chloridizing roasting preparatory to their amalgamation. In such cases the expense of roasting is frequently more than one-half of the total expense of reduction, and consequently low-grade ores cannot be worked with a profit. But in spite of the necessity to adopt some improved and more economical process of roasting, it has been extremely difficult to introduce two inventions, which are based upon the most simple and rational principles—so simple, indeed, that it seems impossible to simplify them any more. We refer to the Gerstenhöfer, or Terrace, furnace, first introduced about six years ago at Freiberg, and the Stetefeldt furnace, invented three years ago at Austin, Nevada, but first introduced for regular working at the mill of the Nevada Silver Mining Company, near Reno, Nevada. The nature of these inventions can be expressed as follows;—

Gerstenhöfer discovered that sulphurets are completely roasted or oxidized if they fall against a current of hot air rising in a shaft which is filled with shelves, so as to check and retard the fall of the ore particles at certain intervals.

Stetefeldt discovered that silver ores, no matter in what combination the silver occurs, mixed with salt are completely chloridized if they fall against a current of hot air rising in a shaft with no obstructions whatever to check or retard the fall of the ore particles.

It is a matter of course that in both cases a certain degree of fineness is required for the ore to be treated, and that a much coarser material can be successfully roasted in the Gerstenhöfer furnace than in Stetefeldt's.

In the Gerstenhöfer furnace only such ores can be successfully treated which, at a red heat during roasting, have no tendency to sinter or stick together. But the small particles of a charge of ore mixed with salt are exactly in such a condition while roasting as to have the greatest possible inclination to sinter and adhere to the shelves. They would thus soon obstruct the whole shaft, and prevent any further work. This has been demonstrated by actual experiments on a working scale. It is apparent, therefore, that the application of the Gerstenhöfer furnace, even for desulphurizing purposes, is very limited, and that certain classes of ore must be entirely excluded from it. This is especially the case with galena ores, which are the most expensive to roast in reverberatory furnaces.

In Stetefeldt's opinion, the shelves in the Gerstenhöfer furnace are perfectly superfluous, and all ores, even galena, can be desulphurized by dropping them through a plain shaft heated by fire-places below, if they are reduced to a sufficient degree of fineness. The escape of unroasted dust from the shaft is of no consequence, as a separate fire-place is constructed for the roasting of these suspended particles in the Stetefeldt furnace. Furthermore, the feeding machinery of the Stetefeldt furnace is based upon a principle entirely differing from that used with the Gerstenhöfer furnace.

That a furnace without shelves is cheaper and easier to construct, more durable, less liable to get out of order, and that it requires less labour and skill to run it, will be readily conceded.

Much difficulty was experienced to provide suitable feeding machinery for the Stetefeldt furnace. Gerstenhöfer's apparatus, consisting of fluted rollers, which force the ore through slits in the top of the furnace, would not answer at all. The ore fell down in lumps, and arrived at the bottom of the shaft almost raw. The reason for this behaviour is simply the tendency of the particles of all finely-pulverized mineral substances to adhere to each other if a slightly-compressed mass of them falls through the air. It is, therefore, necessary to introduce the ore pulp so finely divided, that all the particles can be penetrated by the heat within the short time of their fall through the shaft. To feed the pulp with a blower, as in Keith's desulphurizing furnace, was not considered desirable for the following reasons;—

1. The fall of the ore would be accelerated.

2. The draught of the fire-places would be impeded by the downward current of the air from the blower.

3. The formation of dust would be considerably increased.

The feeding machinery in its present shape can be briefly described as follows;—

A hollow cast-iron frame, kept cool by a small stream of water, rests on top of the furnace. In this frame is inserted a cast-iron grate, which is covered by a punched screen of Russia iron, No. 0,

for wet crushing of the trade. Close to the punched screen moves, inside of the hopper, a coarse wire screen, No. 3 of the trade, which is fastened to a frame. The frame has flanges resting upon adjustable friction rollers outside of the hopper, and receives its motion from a crank, with $1\frac{3}{4}$-in. eccentricity. To avoid the motion of a stratum of pulp with the coarse screen, a number of thin iron blades are so arranged across the hopper that their lower edges reach close down to the coarse screen and keep the pulp in place. When the crank is set in motion, the meshes of the coarse wire screen cut through the pulp, and drive it through the openings of the punched screen. In this way the ore is introduced in a continuous stream into the furnace. The motion of the crank-shaft was variably tried in Reno at from thirty to seventy revolutions a minute.

Construction of the Furnace at Reno.—The accompanying drawing, Fig. 3095, will give a correct idea of the construction of the furnace at Reno;—

A, shaft through which the ore falls. B, top of shaft upon which the feeding machine is arranged. C, damper, which is inserted when the screens of the feeding machinery are exchanged. D, door through which the roasted ore is discharged upon the cooling floor. E, fire-place. F, flue through which the gases escape near the top of the shaft. G, triangular flue-bridges of cast iron. H, grate of cast-iron plates, forming the bottom of flue F, allowing the dust, a small part of which settles here, to drop into the chamber I. K, discharge door. L, fire-place which heats the lower part of flue F, and roasts the dust. M, canal connecting with dust-chamber. N, discharge door. O, dust-chamber.

3095.

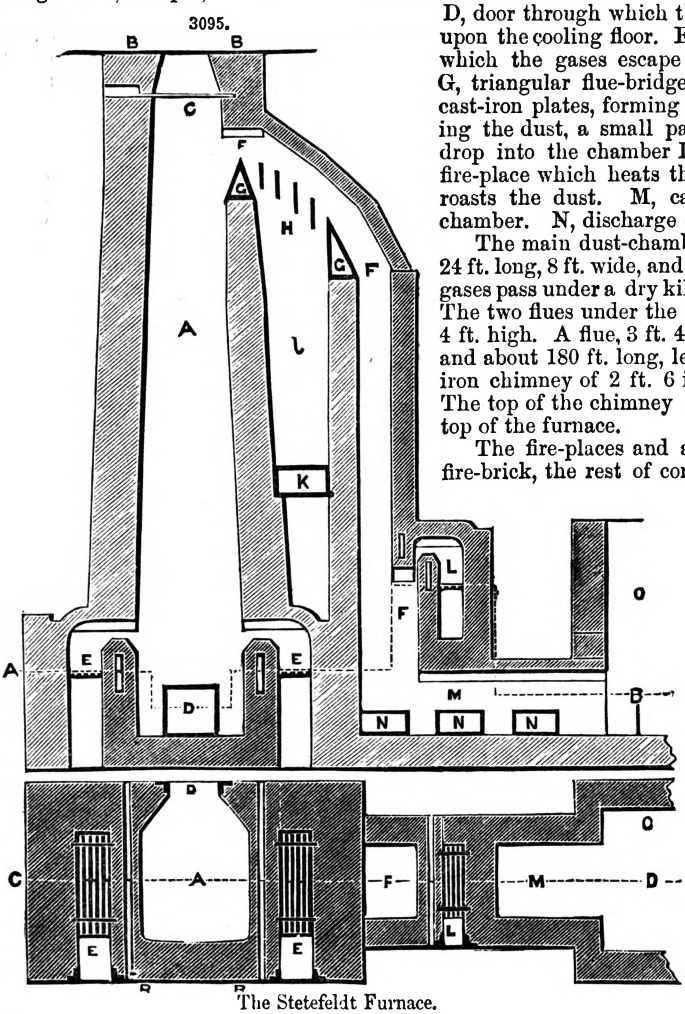

The Stetefeldt Furnace.

The main dust-chamber of the furnace at Reno is 24 ft. long, 8 ft. wide, and 10 ft. high. From there the gases pass under a dry kiln, 39 ft. long and 7 ft. wide. The two flues under the dry kiln are 3 ft. wide and 4 ft. high. A flue, 3 ft. 4 in. wide and 4 ft. 6 in. high, and about 180 ft. long, leads from the dry kiln to an iron chimney of 2 ft. 6 in. diameter on a hill-side. The top of the chimney rises about 40 ft. above the top of the furnace.

The fire-places and arches are built of the best fire-brick, the rest of common brick. All the walls are built double, with a space between. The furnace is well anchored with iron rails and $\frac{7}{8}$-in. rods.

The following changes are contemplated in the construction of the furnace;—

1. The use of oxide of carbon as fuel; the gas to be made out of charcoal in generators. The construction adopted for the latter will be similar to that of the copper-refining furnace at Mansfeld, Prussia. In this way a much more uniform heat can be obtained than by using wood, and labour will be saved, as the generators have to be charged only every three or four hours. Where wood must be hauled a considerable distance, charcoal will be even a cheaper fuel than wood.

2. The chamber I will be abandoned, and the flue F brought down directly on the side R R (see ground plan) of the shaft.

3. A more extensive system of dust-chambers will be connected with the furnace.

Manipulation.—The ore is mixed with the necessary amount of salt on the dry kiln, and crushed by a dry crushing battery through a No. 40 wire screen. A conveyor takes the pulp to a revolving screen, to keep out coarse particles, which may be caused by the breaking of a battery screen. The screened pulp is then taken by an elevator to the top of the furnace and discharged into a bin, which keeps the hopper of the feeding machine filled.

The fire is kept in all the fire-places as uniform as possible, and such a degree of heat is maintained that the roasted ore at the bottom of the shaft is red hot, but does not sinter or stick together. The ore is discharged when a charge of 1000 lbs. to a ton has accumulated, and cooled in the usual manner. At the same time, roasted ore is discharged through the door N, where most of the dust settles, which is roasted by the fire-place L.

Chemical Process in the Stetefeldt Furnace.—At the first glance it would seem that, considering the short time of two seconds, in which the falling ore is exposed to the flame, a perfect chlorination could not take place, especially if compared with the known facts apparent in the common

roasting furnace—that is, that sulphurous acid is formed under influence of a dark red heat, by aid of the oxygen of the air, while the metal, deprived of its sulphur, becomes an oxide. The oxygen of the air and of the oxide act on the sulphurous acid, converting it into sulphuric acid, which again combines with the metal oxide to a sulphate. The sulphate reacts now on the salt, setting the chlorine free, and the formation of chlorides begins.

This reaction and transformation requires time, which is not offered in Stetefeldt's furnace, but the chlorination is effected nevertheless, and very perfectly, with less salt and in a few seconds. The chemical action in Stetefeldt's furnace is as follows;—As soon as the ore enters the furnace each sulphuret particle ignites, being surrounded by a glowing atmosphere, evolving at the same time sulphur, which, in presence of atmospheric air entering undecomposed through the grates, is converted into sulphurous acid, and the metal into an oxide. In contact with ore particles and oxygen the sulphurous acid becomes sulphuric acid. This acid does not combine with the metal oxide to a sulphate, as is the case in a common furnace; or if so, only to an insignificant degree, on account of the temperature, which, nearly from the start, is too high. The sulphuric acid, therefore, turns its force directly against the glowing salt particles, setting free the chlorine. All these reactions are, so to say, *in statu nascenti*. From the burning fuel steam is present among the gases, giving rise to the formation of hydrochloric acid. This hydrochloric acid not only originates directly by decomposition of the salt, but also from the chlorides of the base metals, which are formed in the upper part of the furnace, and again decomposed to oxides and hydrochloric acid in passing through the hot flame. The whole space of the furnace is then filled with glowing gases of chlorine, hydrochloric acid, sulphuric acid, sulphurous acid, oxygen, steam, and volatile base metal chlorides; all of them acting on the sulphurets and oxides with great energy. The chlorine decomposes the sulphurets directly, forming chloride of metal and chloride of sulphur. It decomposes and combines also with oxides and sulphates. The hydrochloric acid does the same. The sulphuric acid decomposes the salt and oxidizes the sulphurets, while the oxygen creates sulphurous and sulphuric acid and oxides. The red-hot ore falls down, and accumulating, continues evolving gases of chlorine, &c.

Considering now a minute particle of ore (for only as such, not as a mass, can the ore be considered in falling) in a red-hot state being attacked contemporaneously by all those gases which have free access from all sides; the principle of the Stetefeldt furnace is, that the chloridizing result must be effected before the particle reaches the floor The dust which passes the flame of the small fireplace is even in a better condition for chlorination, being surrounded and acted upon longer by all the chloridizing gases which are formed in the main shaft.

3096.

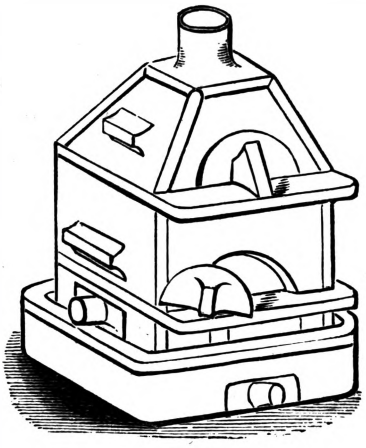

3097.

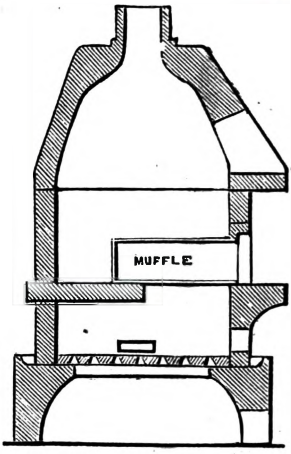

3098.

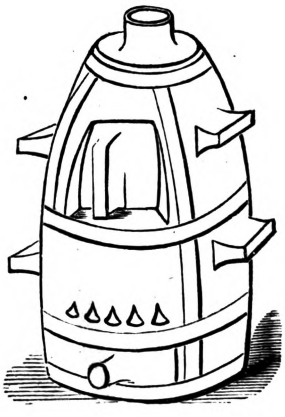

3099.

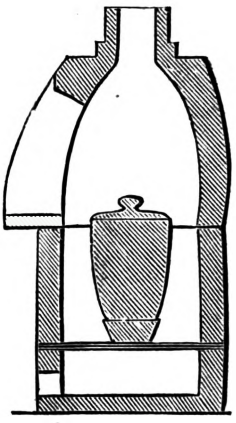

Practical Results of the Stetefeldt Furnace in Chlorination.—A great number of tests were made during the first weeks of running the furnace at Reno. Between 88 and 92½ per cent. of the silver contained in the ore was found to be chloridized, all of which is easily extracted in amalgamation. The roasted dust discharged through the door N is generally 1 per cent. better chloridized than the ore discharged from the main shaft. With an improved system of firing, the chlorination should never be less than 90, and we have no doubt that much higher figures will be obtained. Only very skilled roasters achieve such results in the reverberatory furnace. With ordinary care, a charge cannot be burned in the Stetefeldt furnace, and the roasted pulp is in a splendid condition for barrel amalgamation, as it contains no lumps or sintered matter. Ores

of the most various characters have been roasted with equal success. Even ore containing nothing but silver-bearing galena was treated without any difficulty. In this respect the furnace is admirably adapted to roast ores with large amounts of antimonial and lead-bearing minerals.

Amount of Salt.—In reverberatory furnaces 10 per cent. of salt is generally used. This amount may be safely reduced to 6 per cent. for very rich ores, and to 3 and 4 per cent. for low-grade ores, in the Stetefeldt furnace. No experiments have as yet been made to determine if this percentage can be reduced still more. The difference in the percentage necessary is explained by the fact that in the Stetefeldt furnace all the salt is decomposed and utilized, while in the reverberatory furnace a large percentage remains in lumps and entirely unchanged.

Fuel.—The amount of fuel necessary to heat the shaft depends very much upon the character of the ore. The more sulphurets an ore contains the less fuel is required to roast it. The furnace in Reno uses on an average about two cords in twenty-four hours. With this amount between 12 and 15 tons of ore are roasted daily, which is as much as the battery crushes. But the same fuel would just as well roast 20 tons of mainly sulphuret ores, which increase the heat in the shaft when introduced in larger quantities. How many bushels of charcoal a furnace with gas generators would require we are not able to estimate reliably at present; but for most localities in Nevada charcoal will be as cheap if not cheaper than wood.

Fig. 3098 is of a portable melting furnace; Fig. 3099 is section of 3098, which shows the interior arrangement and the position of the *crucible*.

This furnace, lately introduced by the Plumbago Crucible Company, Battersea Works, can be employed in a very confined space; no blower is necessary; its heat may be increased to melt gold by merely lengthening the funnel. This furnace is of great use to the gold-beater, as it renders him independent of the gold-refiner.

Figs. 3096 and 3097 are of a muffle furnace for assayers, dentists, and enamellers.

See ANEMOMETER. ANIMAL-CHARCOAL MACHINE. ASSAYING. BLAST FURNACE. BOILER, p. 466. CHIMNEY. ELECTRO-METALLURGY, p. 1374. FOUNDING AND CASTING. KILN. OVENS. See also articles on the various Metals.

FUZE. FR., *Fusée*; GER., *Zünder*; ITAL., *Fuso*; SPAN., *Espoleta*.

A *fuze* or *fusc* is a tube filled with combustible matter, and used for discharging shells, in blasting, and so on. See BORING AND BLASTING.

Fuze-making Machine, Bickford's, Figs. 3100 to 3105.—The fuze invented by Bickford for igniting gunpowder when used in the operation of blasting of rocks and in mining, which he called the miner's safety fuze, is manufactured by the aid of machinery, and of flax, hemp, or cotton, or any other suitable materials spun, twisted, and countered, and otherwise treated in the manner of twine-spinning and cord-making. Bickford, in describing his machinery, observes;—"I embrace in the centre of my fuze, in a continuous line throughout its whole length, a small portion or compressed cylinder, or rod of gunpowder, or other proper combustible matter prepared in the usual pyrotechnical manner of firework for the discharging of ordnance, and which fuze so prepared I afterwards more effectually secure and defend by a covering of strong twine made of similar material, and wound thereon, at nearly right angles to the former twist, by the operation which I call countering, hereinafter described, and I then immerse them in a bath of heated varnish, and add to them afterwards a coat of whiting, bran, or other suitable powdery substance, to prevent them from sticking together, or to the fingers of those who handle them; and I thereby also defend them from wet or moisture, or other deterioration, and I cut off the same fuze in such lengths as occasion may require for use; each of these lengths constituting, when so cut off, a fuze for blasting of rocks and mining, and I use them either under water or on land, in quarries of stone and mines for detaching portions of rocks, or stone, or mine, as occasions require, in the manner long practised by and well known to miners and blasters of rock. In Fig. 3100 I represent that part of the manufacture of my fuze called twisting, the yarn or other material being assumed to be already prepared

3100.

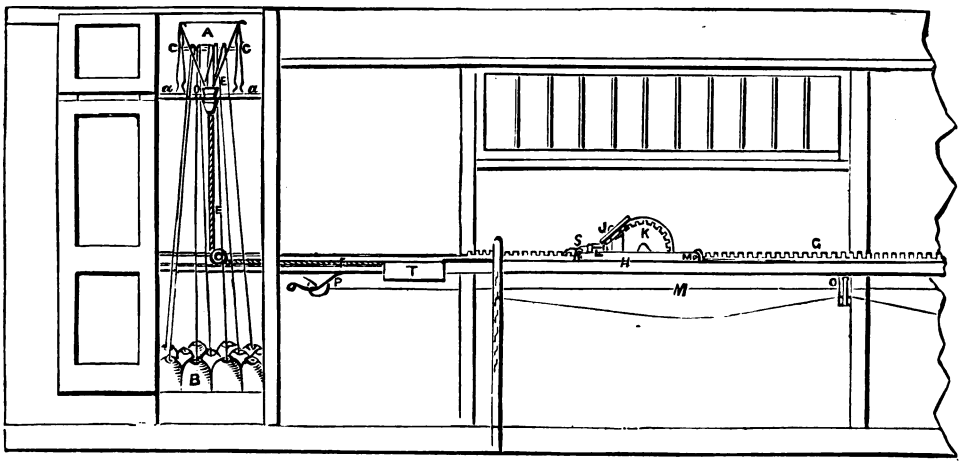

and spun loosely, and wound into balls in the way commonly used and well known to manufacturers of twine and cord; and I also therein represent the mode of charging the fuze with the combustible.

"At the left-hand end of an apartment, which is 65 ft. long, is made an enclosed recess or closet of about 2 ft. square and 6 ft. high, with a door or doors in front; in which closet, at the height of about 4 ft. 10 in., is placed a wooden shelf, marked A, about 1 in. thick at least, extending the whole length and breadth of such closet. In the centre of this shelf is made a hole, into which hole is inserted a collar, marked D. This collar is of metal, in form the frustum of a cone inverted. It is 3 in. long, 2 in. diameter at the upper end, and 1¼ in. at the bottom; through the centre of this is a hole, ¾ of an inch diameter at the top, and $\frac{3}{16}$ of an inch diameter at the bottom. Around this, in a circle, are twelve holes, of about ⅛ of an inch diameter, which converge toward the centre hole at the bottom, so as to be separated from it only by a fine edge of the metal, Fig. 3101. D is a vertical section of the collar, and r the top and S the bottom of it. This collar, when so placed in the hole of the shelf, projects both above and below the wooden shelf. In the upper projecting part of the cone or collar is then to be placed a common funnel, 12 in. high and 10 in. in diameter at the top, as represented by the letter A; around this funnel, at about 10 in. high from the before-mentioned shelf, is placed a ring, made of cane, marked *c c*, and supported by a small frame of two or more pillars, resting on the before-mentioned shelf. At about 2 ft. 6 in. high from the floor of this room, and passing through the said closet, and extending the entire length of the said room 65 ft. long, is a stage or shelf or bench, marked F F; the outside of this stage or shelf or bench has a ledge or raised edge rising 1 in. above its surface, and on a similar raised edge on the inside, rising 1½ in., is a line-rack marked G G, with teeth or cogs, twenty teeth to a foot. This stage or shelf or bench is intended to support thereon a machine, being part of the apparatus thus used by me in my invention, called the monkey, marked H, which monkey consists, first, of a plane piece of board, 20 in. long and 6 in. wide, supported by and running upon three wheels of 1½ in. diameter; on this board, supported by and turning in two centres, is a transverse axle, marked 2, placed quite across the plane bed of the monkey, supported by brackets, marked 1, 1, and turning round in holes made in the brackets, on the inside end of which is fixed a wheel marked K, of 10 in. diameter. Close to this wheel K, and directly over the line-rack, is placed on the said axle a pinion marked Z, which works on the cogs of the line-rack G G, on the side of which wheel K at its outer edge are twenty-four teeth or cogs; these teeth or cogs work into corresponding teeth on the inner circle of the wheel J, the wheel J having two circles of teeth or cogs, the inner and smaller circle working, as already described, in those of the wheel K, and the outer circle of cogs working into the pinion L; connected with this pinion L is the crook S, and to this crook the threads of twine or other material are attached for twisting. A string or cord M is fastened to the board of the monkey, and stretching along the stage or shelf or bench F F, passes over the pulley N, and returning through the holes O, O, O, made in the supports of the stage or shelf or bench, is attached to the winding roller P; in this situation of the apparatus twelve balls of twine marked B or other material intended to form the fuze are placed in the recess or closet on a floor raised there for that purpose 6 in. higher than the floor of the room, and the running threads from these balls are each led perpendicularly up through holes of 1 in. diameter, made for that purpose in a circle of 12 in. diameter in the shelf in which the before-mentioned collar is placed, and also perpendicular to and passed from the outside to the inside over the said cane ring next to the funnel hereinbefore mentioned, and from thence the said threads are again led down by the side of the funnel to and through the holes in the upper and under side of the aforesaid collar, which threads will then converge towards the lower point of the inner cone or collar, and there hang parallel and near to each other, and from thence they are to be led together to the pulley Q. Thence passing under the said pulley at a right angle they go to the monkey on the stage or shelf or bench, and are there made fast to the crook S. The winding roller P being now put in motion communicates that motion to the monkey H which travels on the stage or shelf or bench marked F F, towards N, and at the same time by the pinion marked Z working on the line-rack G G; the cog-wheels before mentioned marked J and K work the pinion marked L, and turning thereby the crook S, completely twist the twelve threads marked E so made fast thereto, and continue that twist up to the very point of the cone projecting downwards from the collar under the funnel; at the very same time of putting the monkey in motion the funnel is charged with the gunpowder or other combustible matter for making the fuze, and then it is important to carefully watch the progress of the threads, and prevent or rectify any entangling thereof; and also regulate the exit of the powder and prevent the dispersion of any surplus that falls to waste through the point of the cone or collar under the funnel during the operation of twisting. In this operation of twisting the powder passing the funnel lodges in the centre of the twelve threads, and is simultaneously embraced by all the threads, and the twisted part thus containing the powder is by the monkey drawn down and passes under the pulley Q, and continues its course with the monkey twisting the fuze along the stage or shelf or bench to the end of the room at N. Here the monkey stops, and this part of the fuz e so charge

3101.

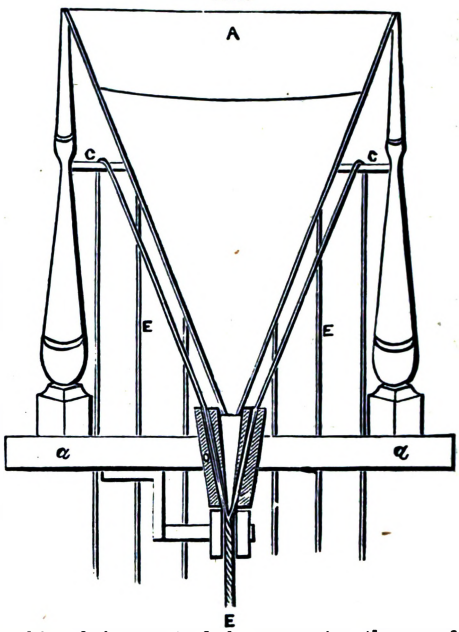

and twisted is then cut off, and over a box marked T placed on the said stage or shelf or bench to receive any gunpowder or other combustible matter used therein that may fall from the ends when so cut asunder; the two ends thus separated are secured by a knot or tie made on each; the part so twisted and separated is put aside for the subsequent operation of countering." By the monkey just described only one fuze could be spun at the same time, whereas it is desirable that several fuzes should be spun at once. By Bickford's improved machine, Figs. 3102 to 3105, three or more fuzes may be spun at the same time by one apparatus. The nature of this improvement, and the construction of the improved monkey for this purpose, will be seen by reference to the annexed figures. Fig. 3102 is a plane; Fig. 3103, a vertical longitudinal section; and Fig. 3104, a vertical transverse section of a monkey for spinning three fuzes at the same time. The wheel *a* works another of equal size and number of cogs *b*, shown in dotted lines in Fig. 3102, and seen in section in Fig. 3103. This wheel *b* has a vertical spill or centre *c*, Fig. 3103, on the upper part of which is a crown-wheel *d*, Figs. 3102, 3103, with teeth on its under edge working the pinion E, Figs. 3102, 3103, having on the outer part of its centre the cog-wheel *f*, Figs. 3103, 3104, with eighteen teeth working into the wheels *g*, *h*, *i*, Fig. 3104, of the same size and number of teeth; on the centres of the wheels *g*, *h*, *i*, are the wires and crooks *k*, *l*, *m*, Fig. 3102. To these crooks are attached the several

3102.

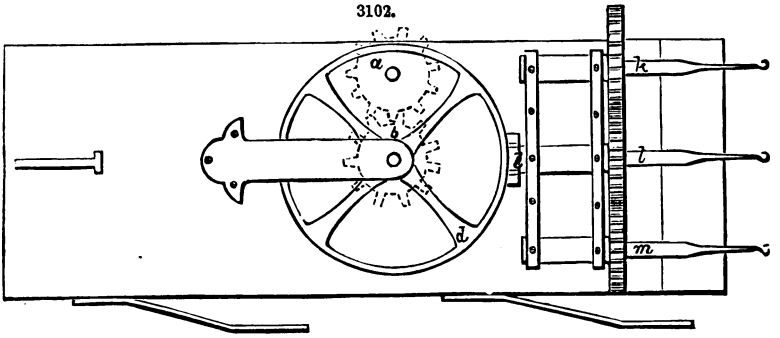

3103.

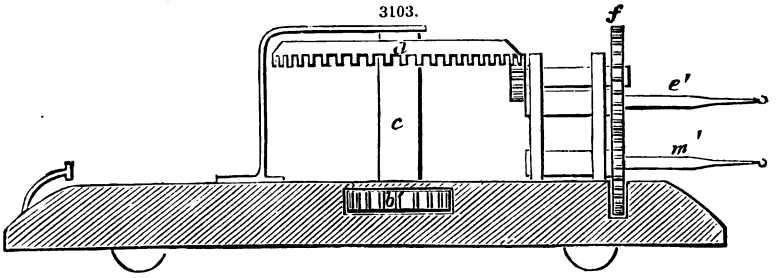

3104.

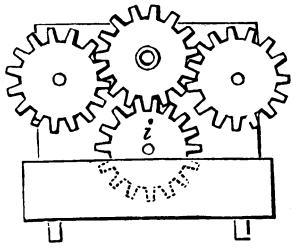

3105.

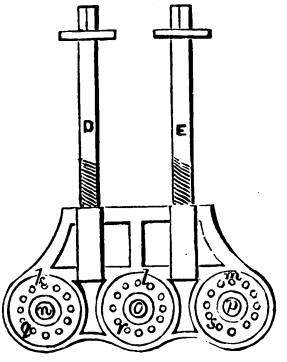

3106.

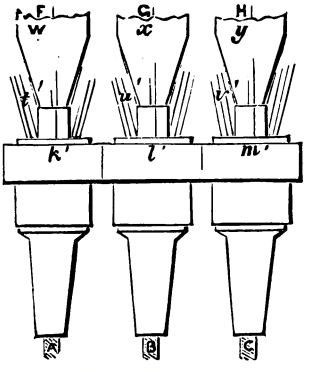

yarns, which as the monkey travels along the bench are spun into fuzes. We prefer to have fifty-two teeth in the crown-wheel *d*, eight teeth in the pinion *e*, twelve teeth in each of the wheels *a* and *b*, and twenty-four teeth to a foot in the side rack. In order to use this improved monkey it is necessary to increase the number of funnels for the gunpowder and collars, which may be arranged as shown in Figs. 3105, 3106. Fig. 3105 is a plan of these collars cast in one united piece of brass-work, *k*, *l*, *m*, being the three several collars, the whole being fixed to an upright frame by the screws D, E; the centre holes *n*, *o*, *p*, being intended for the reception of the gunpowder funnels *w*, *x*, *y*, Fig. 3106, and the several circles of holes *q*, *r*, *s*, being intended to receive the yarns, which meet below and embrace the gunpowder as the fuze is spun. Fig. 3106 is a vertical view of this same part of the machine. *k*, *l*, *m*, are the three collars; *t*, *u*, *v*, are the yarns passing into the several

circles of holes around the mouth of the funnel; *w*, *x*, *y*, are the three gunpowder funnels, and A, B, and C, the three fuzes issuing from the interior tube beneath. By placing the wheel *f*, Fig. 3103, in such a position that a large number of wheels may work into its teeth, and making such other necessary additions and arrangements as will be obvious to any competent workman, four, five, or more fuzes may be spun at one single operation.

Our second improvement in manufacturing fuzes relates to the mode of introducing the gunpowder according to the method described in the said specification; the gunpowder is not supplied from the funnel with the rapidity, regularity, and certainty which may be attained by our improvement. We introduce into the centre of the fuze a small strong thread or yarn, smaller and less fibrous than the yarns employed for the fuze. The thread or yarn which we employ is that known as No. 135 white-brown thread; this we supply from a reel or other source conveniently placed above the funnel containing the gunpowder; this thread or yarn is passed down through the gunpowder and spun into the centre of the fuze by being attached to the monkey and drawn on with it as the fuze is spun. The position of these threads is shown by F, G, H, Fig. 3106. By means of this thread so drawn on as the fuze is spun the gunpowder in the lower part of the funnel is constantly kept in motion and travels on with the thread, so as to flow regularly down into the fuze. By this means the continuity and regularity of the cylinder of gunpowder is ensured.

Our third improvement relates to the coating or varnishing applied to those fuzes which are to be used for blasting in dry ground, and in close or confined situations, or which are subject to considerable variations in temperature. The coating or varnishing heretofore applied, consisting of tar or resin, burns with a great deal of smoke and heat, and is affected by changes of temperature. Instead of a coating or varnish of either of those materials, we take 4 lbs. of best glue and 2 lbs. of yellow soap, and having dissolved them in 12 gallons of water by a gentle heat, we add 56 lbs. of whiting to give it a body; the varnish so made is applied to the fuzes by any suitable arrangements. The new varnish, not being waterproof, must not be employed for fuzes which are to be immersed in water, but being less affected by temperature than the old varnish, and being non-inflammable or burning with little smoke, is much preferable for general purposes.

Our fourth and last improvement relates to fuzes which are to be employed under water. In the manufacture of fuzes to be employed under water, or waterproof fuzes as they are called, it has been usual to add a second countering, after which the fuze was coated or varnished a second time in the usual manner. But fuzes prepared in this manner occasionally failed, in consequence of the varnish becoming more hard and brittle on immersion in water and cracking, and thus admitting the water to the gunpowder. Our improvement for obviating this defect is as follows;—After the fuze has been coated or varnished with tar or resin varnish, and before the coating is hard or quite set, the fuze is fastened to crooks and made to revolve as if for countering, and a strip of brown paper is wound around the fuze in a spiral form, so as completely to envelop and cover the whole surface of the fuze. A thread is then wound round over the paper, which fixes the paper and prevents its shifting; another coat of tar or resin varnish is then applied to the paper, and by this means the fuze may be completely waterproofed and protected against the action of the water.

FUZEE. Fr., *Fusée*; Ger., *Schnecke*; Ital., *Piramide*; Span., *Rueda espiral*.

See Escapement.

GABION. Fr., *Gabion*; Ger., *Schanzkorb*; Ital., *Gabbione*; Span., *Gavion, ceston*.

See Fortification.

GAD. Fr., *Pointerolle, Aiguille du mineur*; Ger., *Setzeisen, Stufeisen*; Ital., *Zeppa*; Span., *Cuña de acero*.

A *gad* is a wedge of steel for driving into crevices or openings made by the pick or chisel.

GALVANISM. Fr., *Galvanisme*; Ger., *Galvanismus*; Ital., *Galvanismo*; Span., *Galvanismo*.

See Battery. Telegraphy.

GALVANIZED IRON. Fr., *Fer zingué*; Ger., *Galvanisirtes Eisen*; Ital., *Ferro zincato*; Span., *Hierro galvanizado*.

See Zinc.

GAS. Fr., *Gaz*; Ger., *Gas*; Ital., *Gas*; Span., *Gas*.

The common gas used for illuminating purposes is a mixture of carburetted hydrogen and olefiant gas, or bi-carburetted hydrogen, which gives a brilliant light when burned.

GAS, Manufacture of. Fr., *Fabrication du gaz*; Ger., *Gasbereitung*; Ital., *Fabbricazione del gas*; Span., *Fabricacion de gas*.

Fig. 3107 is a general plan of a gas-works by Geo. Bower, of St. Neots, Hunts. 1, is the exhauster; 2, the tar-pump; 3, water-pump; 4, boiler; 5, fitters' shop; 6, purifier house; 7, lime-stores; 8, meter; 9, spent lime; 10, 11, and 12, stores; 13, scrubbers; 14, condenser; 15, weigh-bridge; 16, water-well; 17, governor. It is very complete, and with the aid of the details shown on a larger scale in the following figures will illustrate the most modern and approved practice.

Figs. 3107 to 3113 represent sections and part elevations of the retort setting. The retorts are of *fire-clay*, provided with cast-iron mouth-pieces, from which ascension pipes conduct the gas produced in the retorts to the hydraulic main shown in the general plan, Fig. 3107. The retorts are heated in beds of five each, by means of a small furnace, under the fire-bars of which is placed a cast-iron evaporating cistern or pan, into which the ashes from the furnace are allowed to fall, and which evaporate either waste or ammoniacal liquor. The charge for each retort is about 1½ cwt. of coal, drawn at the end of each six hours, producing at the heat of 27°, Wedgwood's *pyrometer*, about 700 cub. ft. of gas, or 3500 cub. ft. in the six hours, for each single bench of five retorts. The retorts are set in double benches end to end, and are charged from both sides of the house. A tramway is provided in front of the benches, connected with the coal-shed and the general system of rails on the works, so that the coal may be taken to, and the coke from the retorts with great facility.

The hydraulic main consists of a horizontal pipe laid above the retort benches supported on small pillars. Into the main the whole of the pipes from the retorts are made to dip. The main

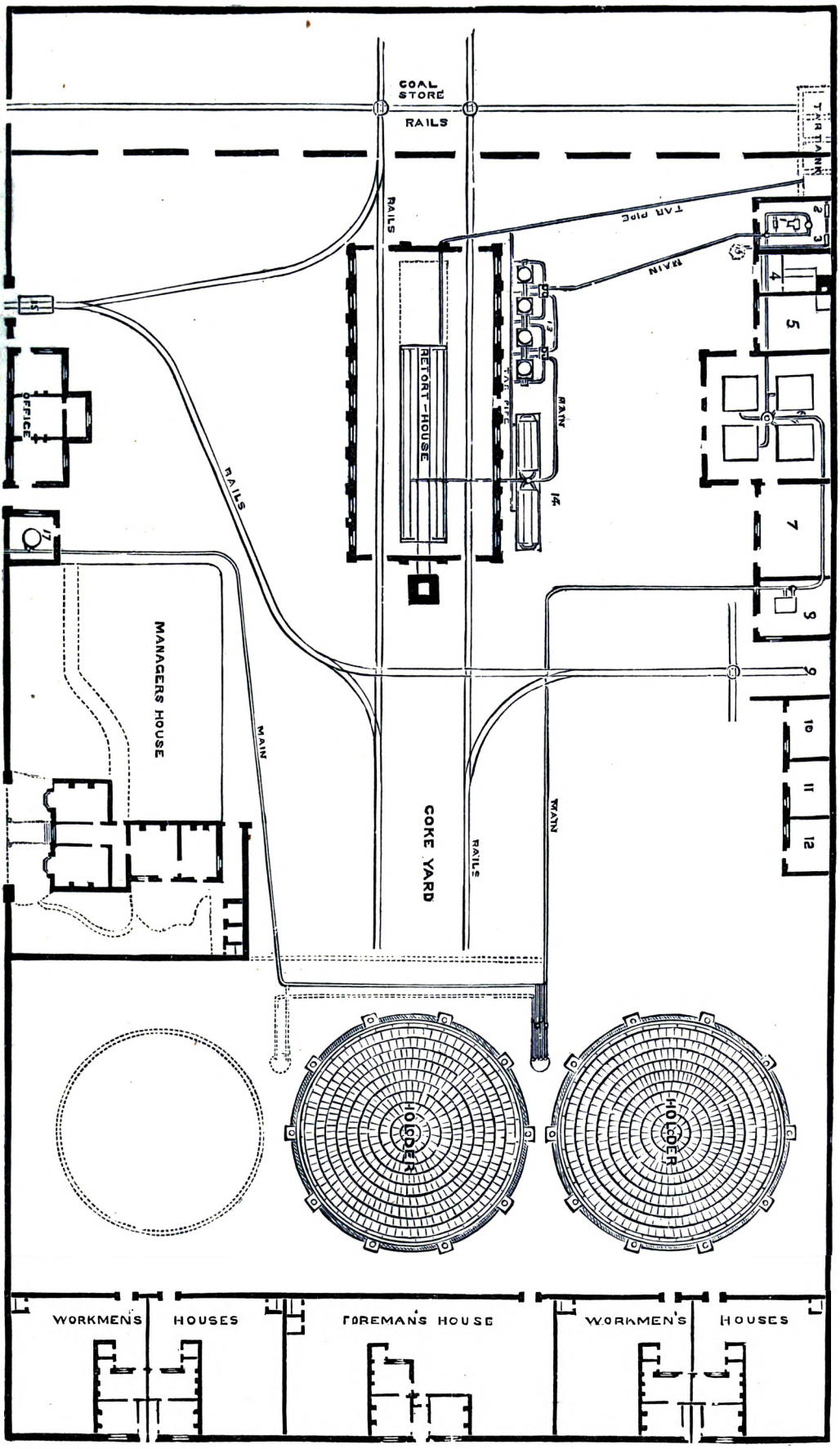
COAL STORE
RAILS
TAR TANK
TAR PIPE
MAIN
RETORT-HOUSE
OFFICE
MANAGERS HOUSE
COKE YARD
HOLDER
HOLDER
WORKMENS HOUSES
FOREMANS HOUSE
WORKMENS HOUSES

3107.

Front Elevation.

3108.

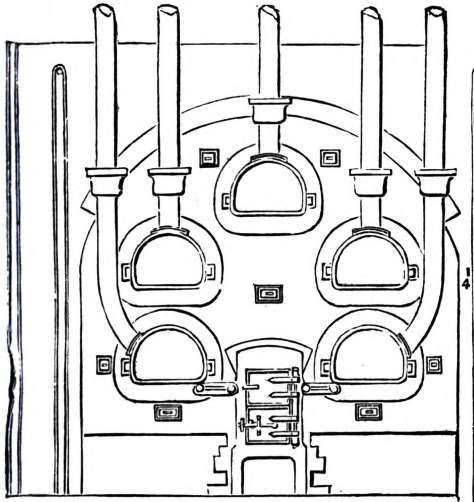

Section on line A B.

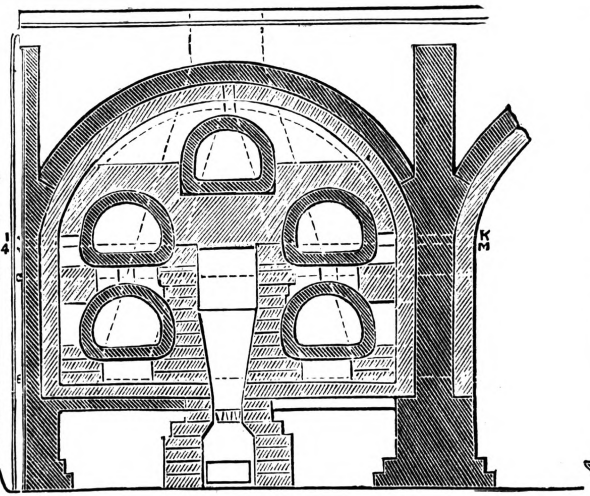

3109

Section on line C D.

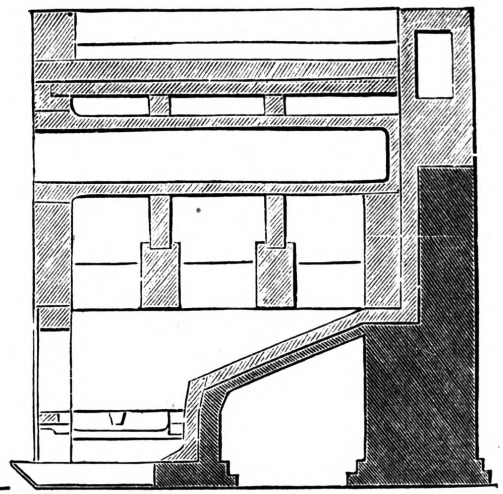

PLAN ON LINE E.F

PLAN ON LINE. H.G

PLAN ON LINE. I.K

PLAN ON LINE. L.M

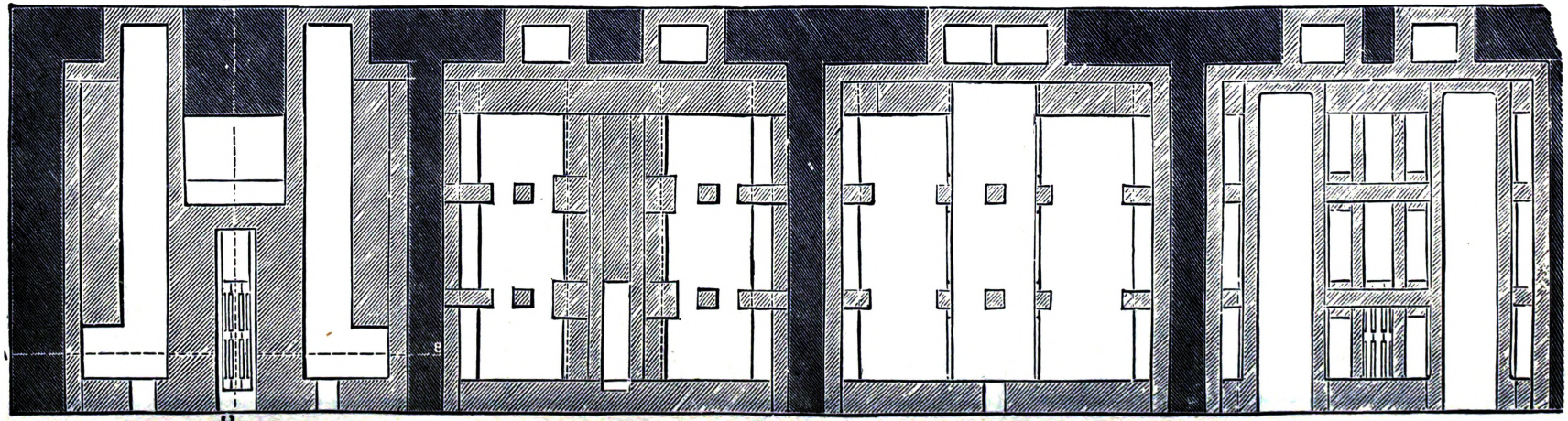

3110.

3111.

3112.

3113.

is kept about half filled with tar, and the dip-pipes are made to terminate about 1½ in. below its level; a sealed liquid joint is thus made, which prevents the return of gas to the retorts when the lids are removed. A considerable quantity of tar is formed in the hydraulic main from a partial condensation of the gas as it passes from the retorts on its way to the condenser shown at 14 on the plan, Fig. 3106. To prevent a too great deposit of tar in the hydraulic main an overflow pipe is inserted at one end, so that the tar is maintained at one universal level, and the surplus is con-

3115.

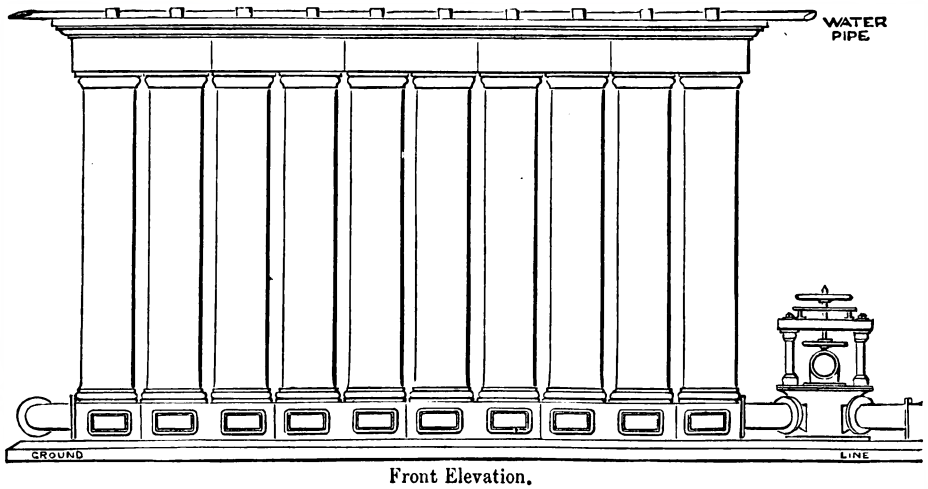

Front Elevation.

3114.

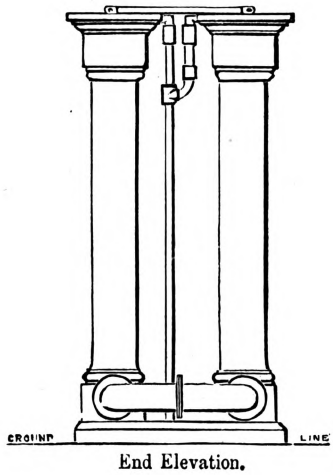

End Elevation.

3116.

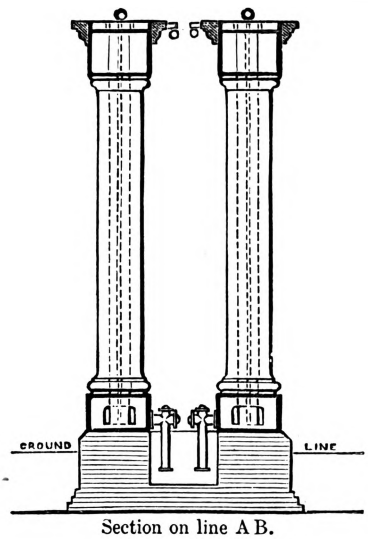

Section on line A B.

3117.

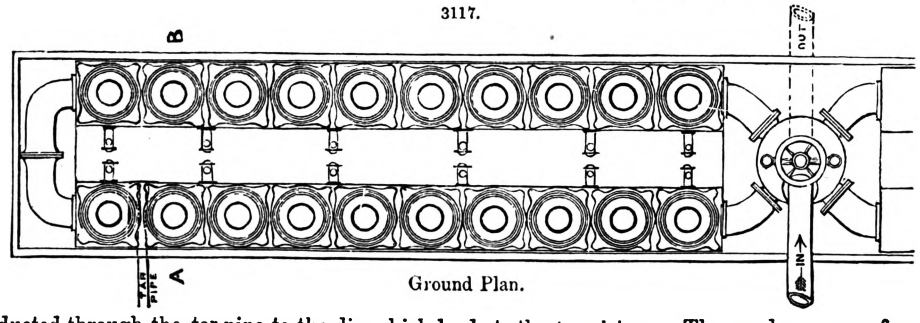

Ground Plan.

ducted through the tar-pipe to the dip which leads to the tar-cistern. The condensers are formed of vertical columns with internal pipes, in which water circulates for the more effectual cooling of the gas. The internal pipes are kept filled with water, and circulation is kept up by making a small supply-pipe to terminate near the bottom of the column inside. The construction is clearly shown in Figs. 3114 to 3117. *a* is the condensing column; *b*, the water column; *c*, the water-

supply pipe; *d*, the tar-dip; and *c* the dip-pipes, through which the tar is conveyed from the condensers as it is formed. The tar-dip is prevented from overflowing by means of a tar-pipe shown on the general plan. The tar-pipe is laid behind the condensers and scrubbers, with branches from

3118.

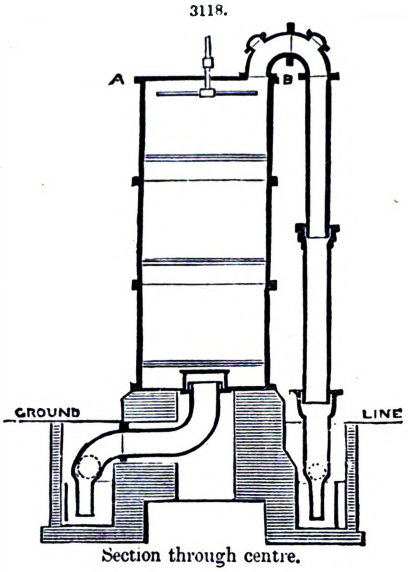

Section through centre.

3119.

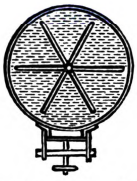

Section on line A B.

3120.

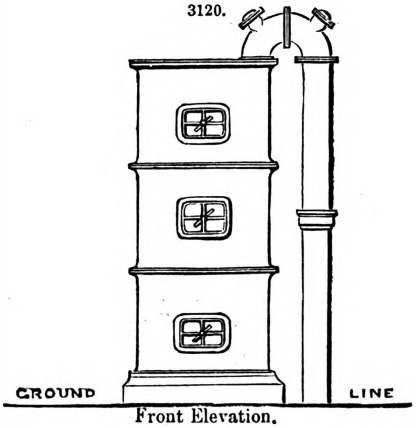

Front Elevation.

3121.

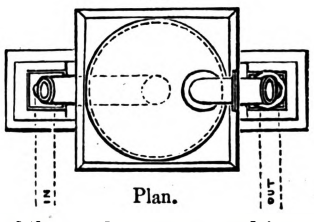

Plan.

3123.

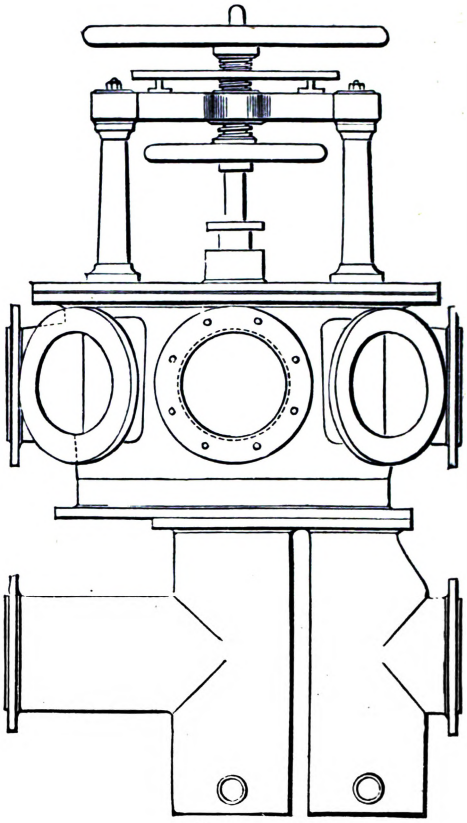

Elevation.

3124.

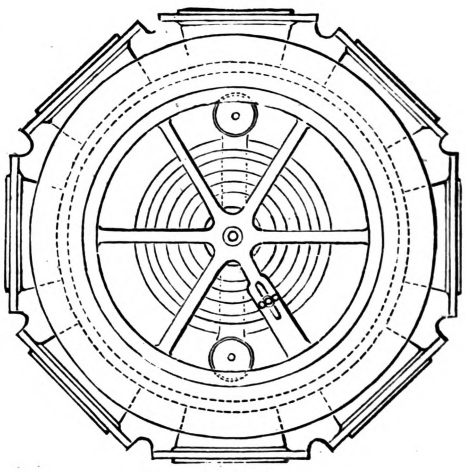

Plan.

each of the tar-dip cisterns, and is connected with the tar-pipe from the hydraulic main, so that all the tar and ammoniacal liquor formed on the main, the condensers, and the scrubbers, is conveyed as it is formed to the tar-tank. There are four condensers arranged so that by means of the centre

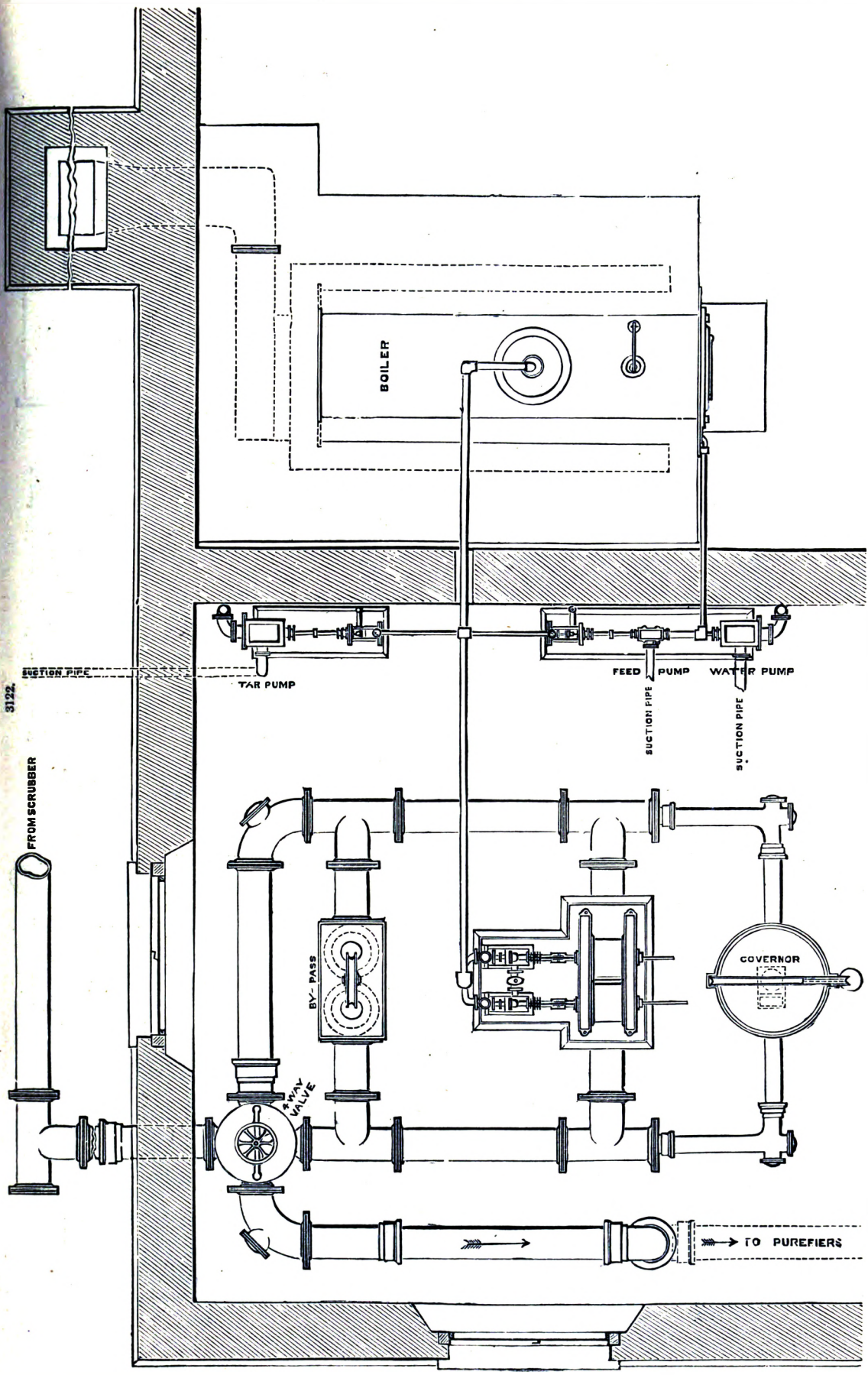

3122.

Exhausting Apparatus.

3125.
Section on line A B.

3126.
Elevation.

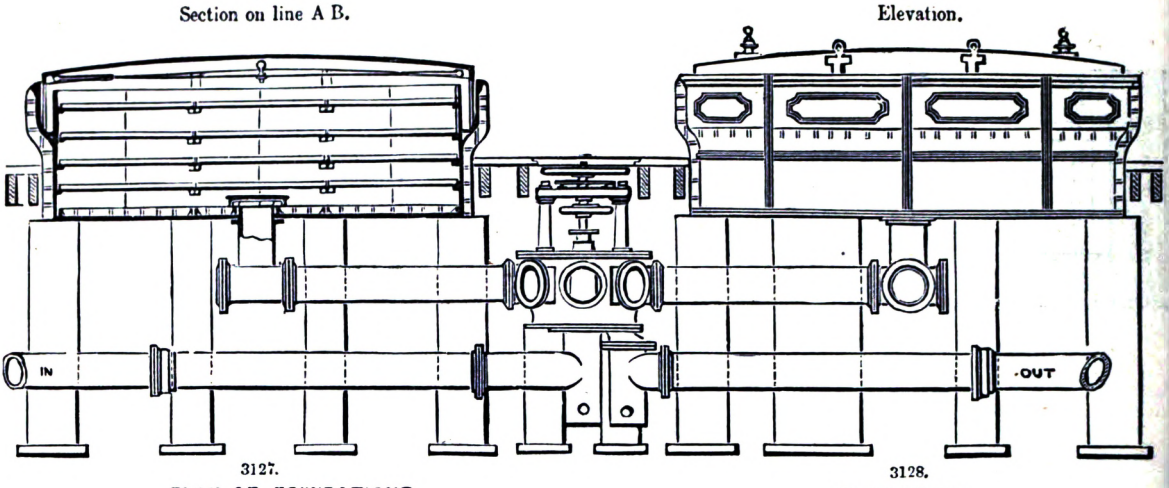

3127.
PLAN OF FOUNDATIONS

3128.
PLAN OF LID

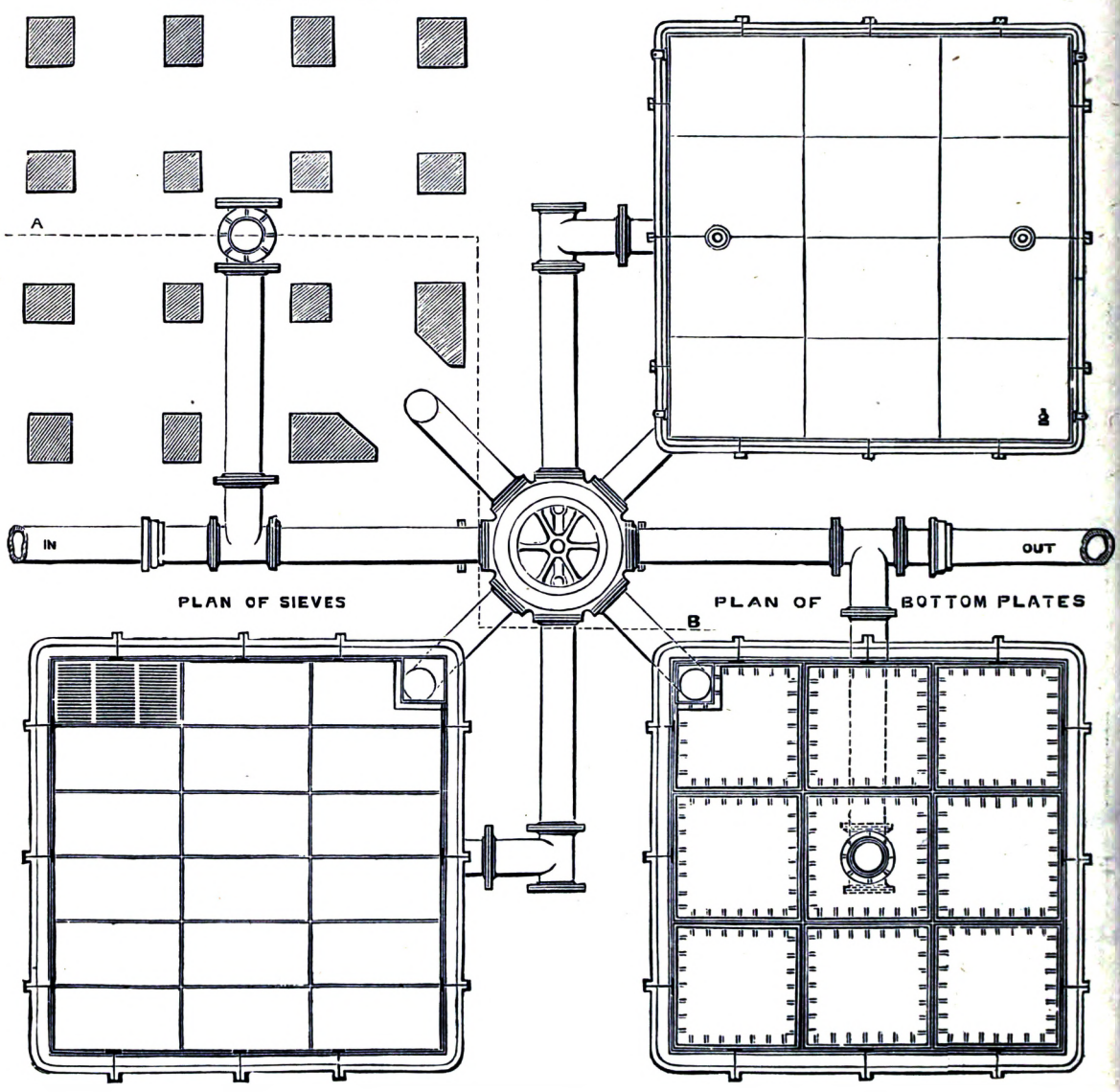

3129.

3130.

valve (14 on plan) either pan may be worked without the other, or both may be worked together. After passing the condensers the gas is conveyed to the scrubbers. The scrubber is for the purpose of more effectually cleansing the gas from ammonia than can be effected in the condenser. The construction of the scrubber will be seen from an inspection of Figs. 3118 to 3121. The gas enters the bottom of the scrubber and passes up through three tiers of sieves, which are filled to a considerable depth with coke or other material presenting large scrubbing surface, which is kept saturated with water or ammoniacal liquor by means of a rose or water spreader, consisting of small radiating pipes perforated with holes. The great amount of surface exposed to gas in passing by the wet scrubbing material collects the fatty oils, absorbs ammonia, and cleanses the gas mechanically before entering the purifiers. There are four scrubbers (shown at 13 on the general plan, Fig. 3106), provided with four valves, by means of which each or either of them may be thrown out of action to provide for the renewal of the scrubbing material. From the scrubbers the gas passes on to the exhausting apparatus. The use of the exhauster is to relieve the retorts from internal pressure during the production of gas, by which the yield of gas is increased from 6 to 10 per cent. The pressure of gas in the retorts, were it not for the exhauster, would be equal to that required to lift the gas-holder and overcome all other resistances on its passage to that vessel; the exhauster pumps the gas as fast as it is made, and thus maintains the pressure of the gas-holder on the delivery side of the pump. The construction of the exhauster is shown in Fig. 3122. It consists of a pair of direct-acting pumping engines, with horizontal pumps placed on a strong cast-iron bed-plate. The engines and pumps are exceedingly simple; there is no fly-wheel or crank, but the piston-rod of the steam-piston is attached directly to the pump-piston, and by means of a peculiar valve-gear the reciprocations of the pistons are produced; the two pumps can be worked together or separately as desired. At the corner of the exhauster house is placed a four-way valve, by means of which the gas may be made to pass on to the purifiers and so throw the exhauster out of use if desired; at one end of the exhauster is placed a by-pass valve, which allows the gas to pass in event of the exhauster ceasing to work from accident or other cause; at the other end is placed a governor, which allows some of the gas to pass back again should the exhauster be pumping too fast for the production of the retorts. This arrangement renders the whole of the apparatus self-acting, requiring no skilled attention. The feed-pumps for supplying the boiler and the tar and water pumps are constructed in a similar manner to that of the exhauster, and being complete

3131.

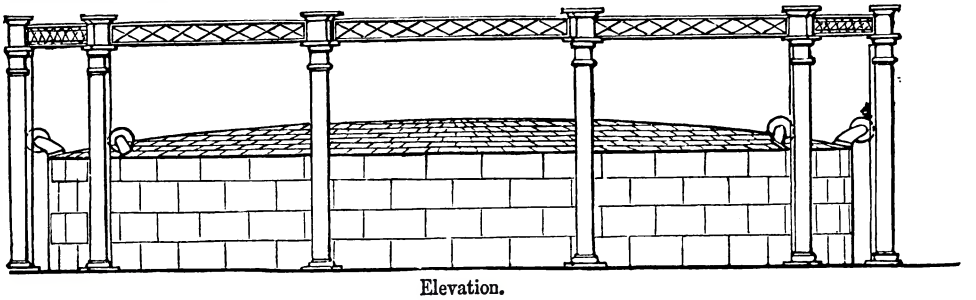

Elevation.

3132.

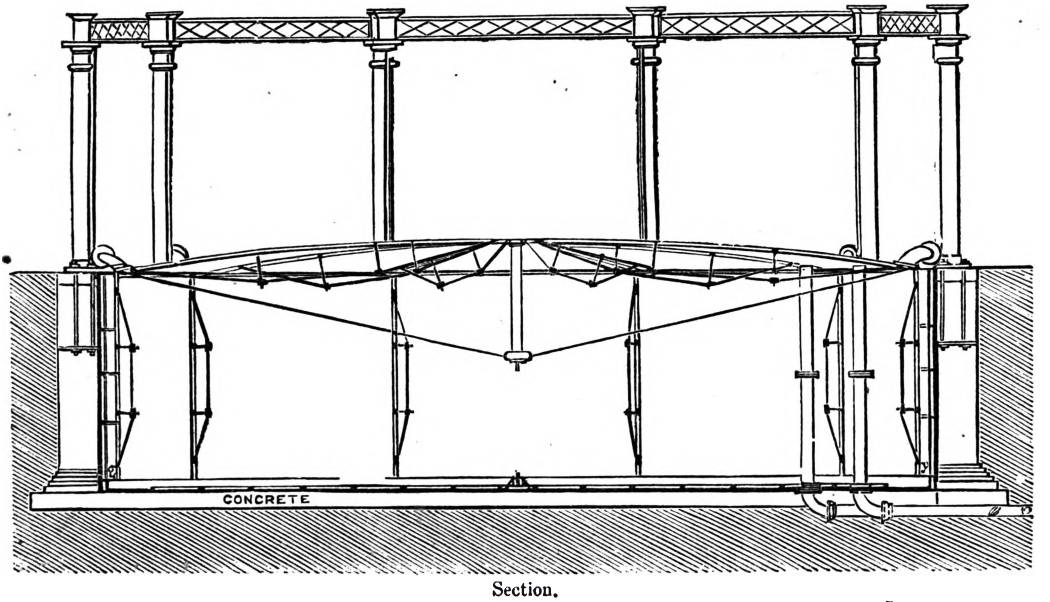

Section.

3133.

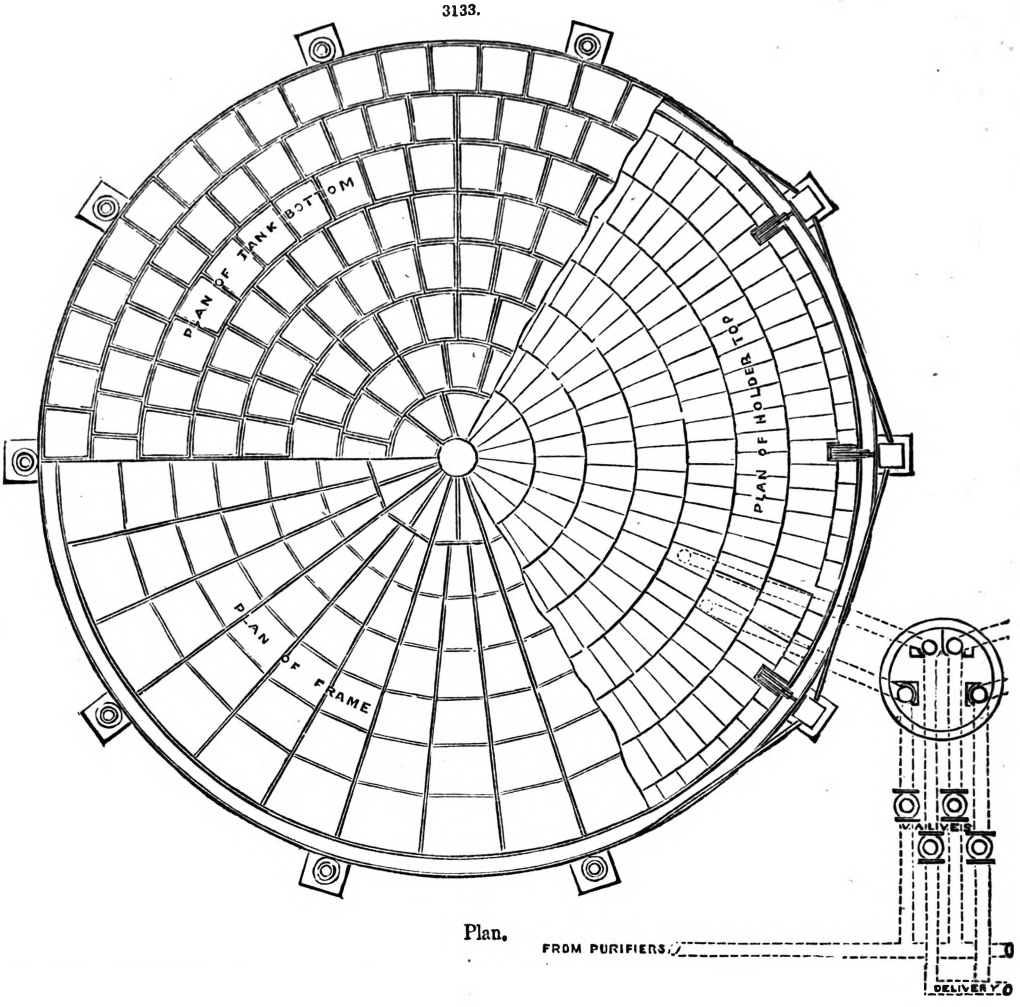

Plan.

3134.

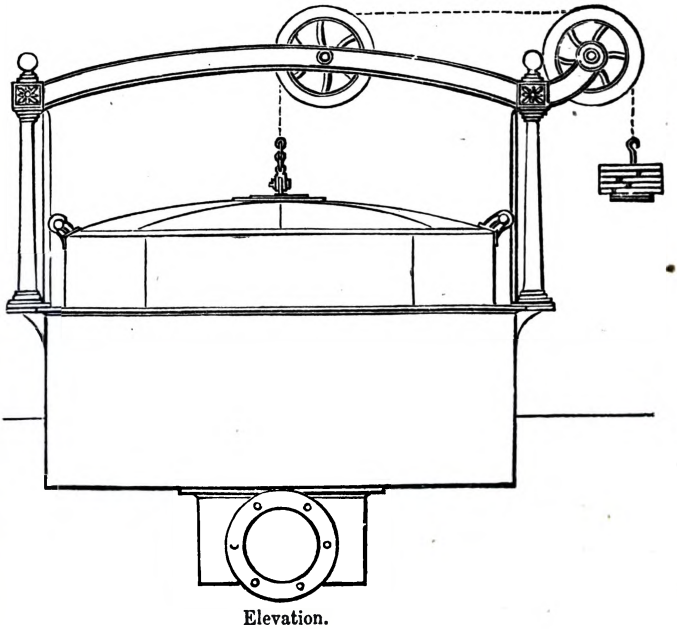

Elevation.

in themselves, an accident with one does not interfere with the others. After passing the exhauster the gas enters the purifiers through a centre valve shown at 6 on the plan. The centre valve, Figs. 3123, 3124, is what is called a dry one, and so constructed that three purifiers may be at work and one out for renewing with lime, or any combination can be made, such as one in and three out or two in and two out, all the changes being made with one valve. The purifiers are clearly represented in Figs. 3125 to 3130, as is also the centre valve and connections. The purifiers are for dry lime, with four tiers of sieves, each carried on angle-iron, as shown in Figs. 3125 and 3129. The sieves are made of wood in square frames, as shown on the plan. Each purifier is supported on brick piers, which are represented in Figs. 3125 to 3127. The gas is made to enter the purifiers, and after

passing through the lime spread over the surface of the sieves, makes its exit through the corner pocket *d*. After passing the purifiers the gas has only to pass through the station meter before being conducted to the gas-holder. The station meter is made to register the gas produced, and by working in connection with a clock, shows the relative quantities produced at each hour of the day. The gas-holders, Figs. 3131 to 3133, are each 80 ft. diameter; a dry well is made by the side of each, through which the inlet and outlet pipes are laid; each pipe is made to dip in a box at the bottom of the well, from which the water formed in the pipes is pumped out by means of a hand-pump. The well *c*, Fig. 3106, answers for the two holders, and the other well *f* is a reserve for the third holder when erected. A stop-valve is

3135.

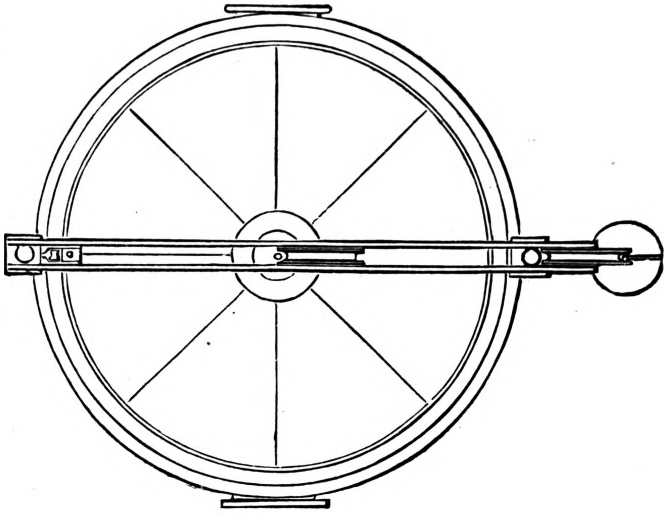

Top Plan.

3136.

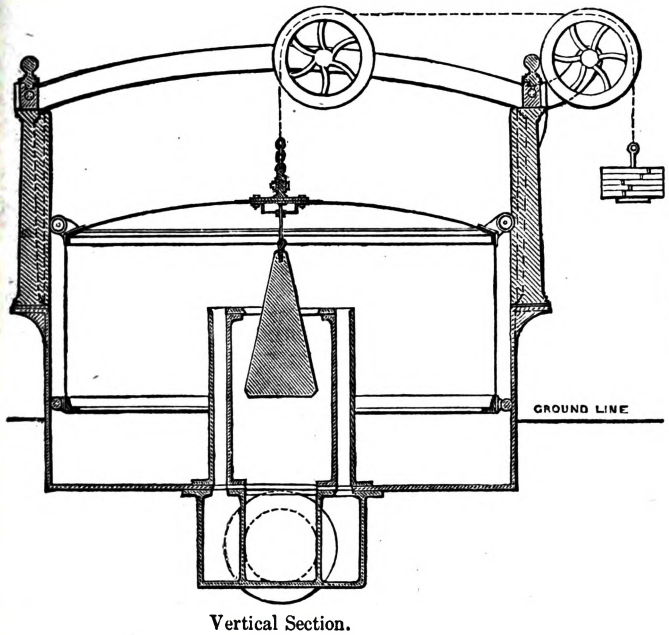

Vertical Section.

3137.

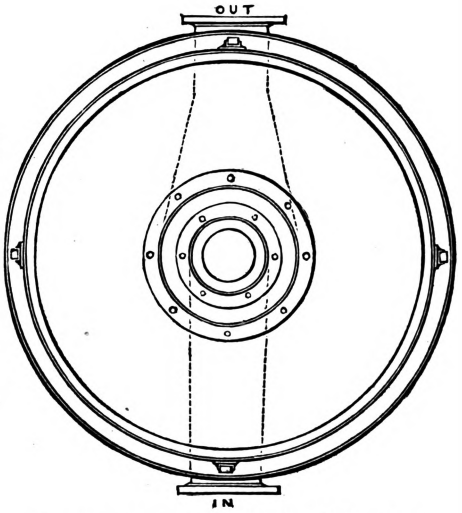

Section through Tank, showing Valve, Seat, and Outlet.

placed to each of the inlet and outlet pipes. On the outlet pipe (17 on plan) is fixed the *governor*, Figs. 3134 to 3137, which governs the pressure at which the gas is supplied to the town. It is of great importance to the engineer that the pressure of gas should be preserved constant at various points on the works; and that he may be enabled to ascertain the pressure at any given point, pressure gauges are placed in various situations: the most important gauges are those placed one before and one after the governor. The former shows the pressure given by the gas-holder, and the latter the pressure at which the gas is delivered into the town. There is also a gauge placed at each of the condensers and scrubbers, one on the suction and one on the delivery side of the exhauster, and one near the purifiers. In the block of the office is provided a room for photometric observations. The general plan shows the arrangement of a works capable of supplying a town requiring about 10,000 lights burning for five hours out of each twenty-four; or it would supply 2000 public lamps burning twelve hours, and 6000 private lights burning four hours per twenty-four; or equal to the wants of an English town of 50,000 or a Continental town of 100,000 inhabitants.

Works relating to Gas:—T. S. Peckston, 'A Treatise on Gas Lighting,' 8vo, 1841. S. Hughes, 'A Treatise on Gas Works,' 12mo, cloth, 1866. W. R. Bowditch, 'The Analysis, Technical

Valuation, Purification, and Use of Coal-Gas,' 8vo, 1867. N. N. Schilling, 'Traité d'Éclairage par le Gaz,' traduit de l'Allemand par E. Servier, 4to, Paris, 1868. S. Clegg, jun., 'A Practical Treatise on the Manufacture and Distribution of Coal-Gas,' 4to, 1868. T. Newbigging, 'The Gas Manager's Handbook,' 8vo, 1870. 'The Journal of Gas Lighting,' small folio, 1849 to 1870. 'Annual Reports of the Trustees of the Philadelphia Gas Works,' 8vo, various years. 'Reports of the Proceedings of the British Association of Gas Engineers,' 8vo, various years.

GAS-HOLDER. Fr., *Gazomètre;* Ger., *Gasometer;* Ital., *Gasometro;* Span., *Gasómetro.* See Gas.

GAS-METER. Fr., *Compteur au gaz;* Ger., *Gasmesser;* Ital., *Misuratore del gas;* Span., *Contador de gas.* See Meter.

GASOMETER. Fr., *Gazomètre;* Ger., *Gasometer;* Ital., *Gasometro;* Span., *Gasómetro.* See Gas.

GATES. Fr., *Porte;* Ger., *Thor;* Ital., *Porte;* Span., *Puertas.* See Docks. Locks and Lock-gates.

GAUGE. Fr., *Tauge, Échantillon;* Ger., *Urmass, Aichmass.*

A *gauge* is a measure; a standard of measure; an instrument to determine dimensions or capacity; a standard of any kind. In mechanics and manufactures;—any instrument for ascertaining or regulating the dimensions or forms of particular things, as a *button-maker's gauge*, a *gun-smith's gauge*, or a *template*. The distance between the rails of a railway. When the railway-gauge is 4 ft. 8½ in., it is called narrow gauge; wide or broad gauge in England is 7 ft., in the United States 6 ft. There are also other intermediate gauges. In plastering, the greater or less of plaster of Paris used with common plaster to accelerate its setting; or the composition made of plaster of Paris and other materials used in finishing plastered ceilings for mouldings, and the like. The *gauge of a carriage* is the distance between the opposite wheels when on the track. *Joiner's gauge*, an instrument used to strike a line parallel to the edge of a board, &c. *Printer's gauge*, an instrument to regulate the margin of the page. *Rain-gauge*, an instrument for measuring the quantity of rain at any given place. *Salt-gauge*, or *salinometer*, a contrivance for indicating the degree of saltness of water from its specific gravity, as in the boilers of ocean steamers. *Standard gauges*, templates, and patterns of certain parts, and tools common to all machine work. *Steam-gauge*, an instrument for measuring the pressure of steam in a boiler. *Tide-gauge*, an instrument for determining the height of the tides. *Vacuum-gauge*, a species of barometer for determining the relative elasticities of the vapour in the condenser of a steam-engine and the air, or for indicating the difference between the vacuum of a condenser and a perfect vacuum. *Water-gauge*, a contrivance for indicating the depth of water as in a steam-boiler, as by a gauge-glass or cock. The term *water-gauge* is also applied to the height of water in a boiler, as three *gauges of water*, that is water up to the third cock. See Anemometer. Details of Engines. Dynamometer. Fan. Meters. Vacuum-gauge.

3138.

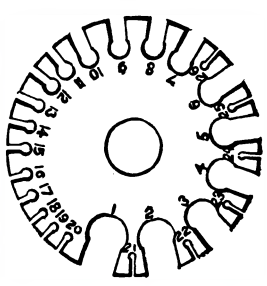

Birmingham Wire Gauge, Fig. 3138.

Table of the Birmingham Wire Gauge, by Sabine and Clark.

No. B. W. G.	d = diam. in inches.	d^2.	Sect. area in square inches.	No. B. W. G.	d = diam. in inches.	d^2.	Sect. area in square inches.
1 circ. in.	1·000	1·0000	·7854	13½	·089	·0079	·00622
0000	·454	·2061	·16188	14	·083	·0069	·00541
000	·425	·1806	·14186	14½	·077	·0059	·00466
00	·380	·1444	·11341	15	·072	·0052	·00407
0	·340	·1156	·09079	15½	·068	·0046	·00363
1	·300	·0900	·07068	16	·065	·0042	·00332
2	·284	·0807	·06335	17	·058	·00336	·00264
3	·259	·0671	·05268	18	·049	·00240	·00188
4	·238	·0566	·04449	19	·042	·00176	·00138
5	·220	·0484	·03801	20	·035	·00123	·00096
5½	·211	·0445	·03497	21	·032	·00102	·00080
6	·203	·0412	·03236	22	·028	·00078	·00061
6½	·191	·0365	·02865	23	·025	·00063	·00049
7	·180	·0324	·02545	24	·022	·00048	·00038
7½	·172	·0269	·02324	25	·020	·00040	·00031
8	·165	·0272	·02138	26	·018	·00032	·00025
8½	·156	·0243	·01911	27	·016	·000256	·00020
9	·148	·0219	·01720	28	·014	·000196	·00015
9½	·141	·0199	·01561	29	·013	·000169	·00013
10	·134	·0180	·01410	30	·012	·000144	·00011
10½	·127	·0161	·01267	31	·010	·000100	·000078
11	·120	·0144	·01131	32	·009	·000081	·000063
11½	·114	·0130	·01021	33	·008	·000064	·000050
12	·109	·0119	·00933	34	·007	·000049	·000038
12½	·102	·0104	·00817	35	·005	·000025	·000019
13	·095	·0090	·00708	36	·004	·000016	·000012

The gauge, Fig. 3139, manufactured by Elliott Bros., London, is one of the standard Government gauges employed in the Royal Gun Factories. These gauges measure from 36 to 40 in. outside, and 64 in. inside; they read by *vernier* to ·001 of an inch. Some of these gauges are from 4 to 5 ft. in length. The one shown in Figs. 3139, 3140 will measure from 0 to 12 in. *Naylor's gauge* for iron is the one chiefly used by the manufacturers of England, and is similar to the one represented in Figs. 3139, 3140; Naylor's gauge by vernier reads to the $\frac{1}{1000}$ part of an inch. The *micrometer gauge*, Fig. 3141, is used to measure wire, sheet metal, and other substances to the ·001 of an inch. It is the most complete little instrument of the sort yet introduced. In using this instrument it should be manipulated with great delicacy, as undue pressure would destroy its accuracy. A gauge of this kind, made by Elliott Bros., for the Royal Mint, reads to the ·0001 of an inch. There are other peculiar contrivances termed gauges, such as the standard for measuring the height of recruits; the instrument employed to measure buckles and indents in targets; standard yards and rods; and the stadiometer used in the army, which require no particular description.

3139.

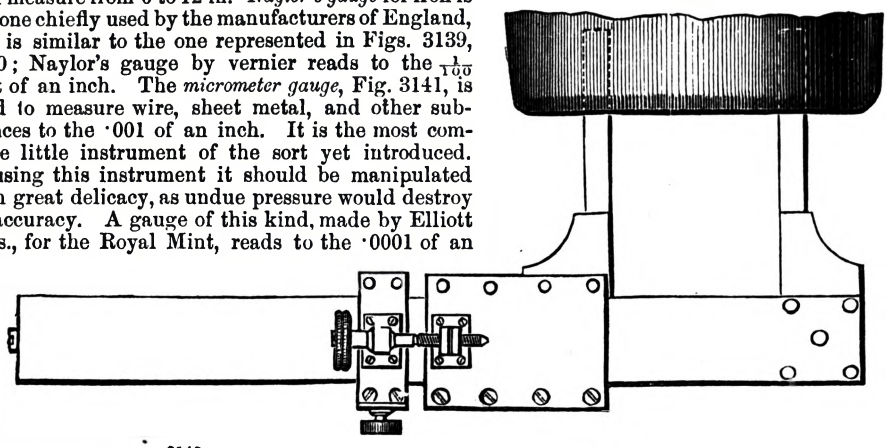

3140.

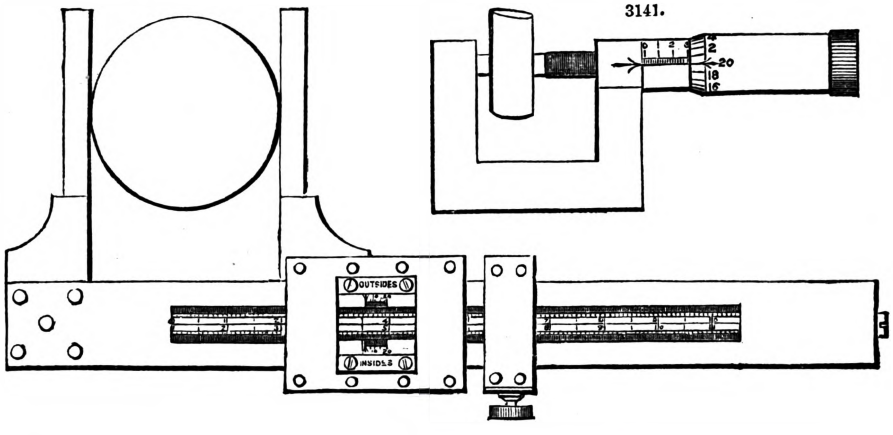

3141.

GAUGE, STEAM. FR., *Manomètre;* GER., *Monometer;* ITAL., *Manometro;* SPAN., *Manómetro.*

See DETAILS OF ENGINES. GAUGE. VACUUM-GAUGE.

GEARING. FR., *Engrenage, Communication de mouvement;* GER., *Verzahnung, Verbindungstheil, Geschier;* ITAL., *Ruote dentate;* SPAN., *Aparato de trasmision de movimiento.*

Nomenclature of the Curves used for the Form of the Teeth of Wheels.—The form to be given to the teeth of wheels is an essential point in their construction, for on it depends, in a great measure, the regularity of the motion and the wear of the wheels. Originally the cylindrical form was considered the most advantageous, and was exclusively employed. Numerous experiments have shown, however, that the best forms are those of certain curves, which give a result rigorously exact from a theoretical point of view, and very advantageous in practice. These curves, employed according to the nature of the transmission of the motion, are the following;—The common cycloid, the elongated cycloid, the common epicycloid, the elongated epicycloid, the contracted epicycloid, or common hypocycloid, the elongated hypocycloid, the involute of a circle, and the elongated involute of a circle.

The Common Cycloid.—This curve is generated by the point *a* in the plane of the circle *o* which, while turning about its own axis, rolls upon the straight line *x y*. This point *a* and the circle *o* are called the generators of the curve, the line *x y* being usually called the directrix. The curve is complete when, after a complete revolution of the generating circle, the point *a* again touches the directrix, Fig. 3142.

Construction.—The generating circle *o* being given, and the line *x y* upon which it is to roll, divide, beginning at the point *a*, the circumference of the circle into a sufficient number of equal parts *a* 1, *a* 2, *a* 3 . . . to allow of each of them being considered as a straight line; and mark on the line *x y* the same number of parts *a b*, *b c*, *c d* . . . equal to the divisions on the circumference. With the radius *o a* describe circles to the directrix in the points *b*, *c*, *d* . . . ; their intersection with the parallel lines drawn through the points 1, 2, 3 . . . gives points in the cycloid. It only remains to join them by a continuous curve. It will be noticed that the centres of all the circum-

ferences must be on a line parallel with the directrix, and drawn through the point o, and upon the perpendiculars raised from the points b, c, d . . .

3142.

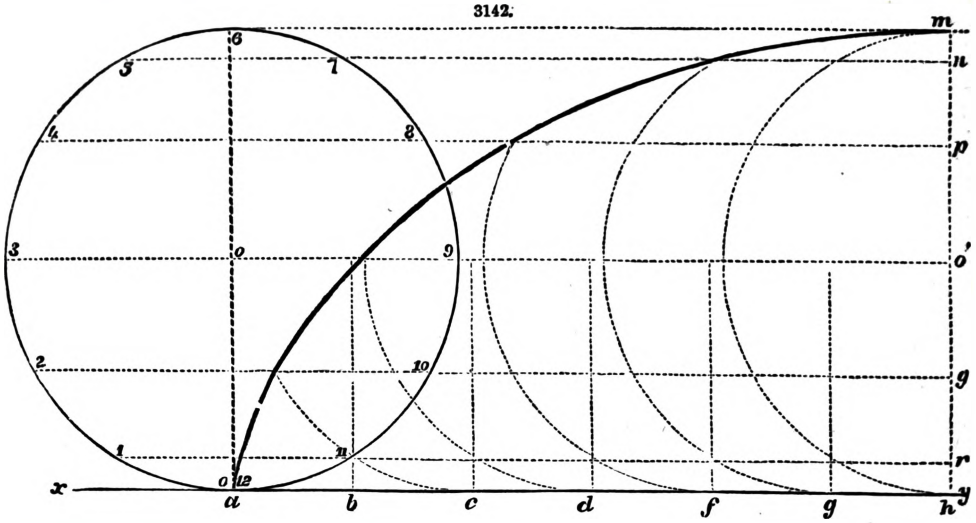

When the generating circle is tangent in h the half of its circumference will be developed upon $x\,y$, and consequently we have obtained the half of the curve sought. The other half may be easily determined by taking $n\,5''$, $p\,4''$ . . . equal to $n\,5'$, $p\,4'$ . . . As only a very small portion of the cycloid is ever used, it will be sufficient for purposes of gearing to determine a single element.

The Elongated Cycloid.—This curve is generated by a point a in the circle A′ concentric with a circle A, which rolls upon a straight line $x\,y$, called the directrix, Fig. 3143. The point a and the circle A′ are called the generators of the curve. The generating circle being invariably connected with the circle A, and dragged along with it in the motion of rotation, the latter might be called the conducting circle.

3143.

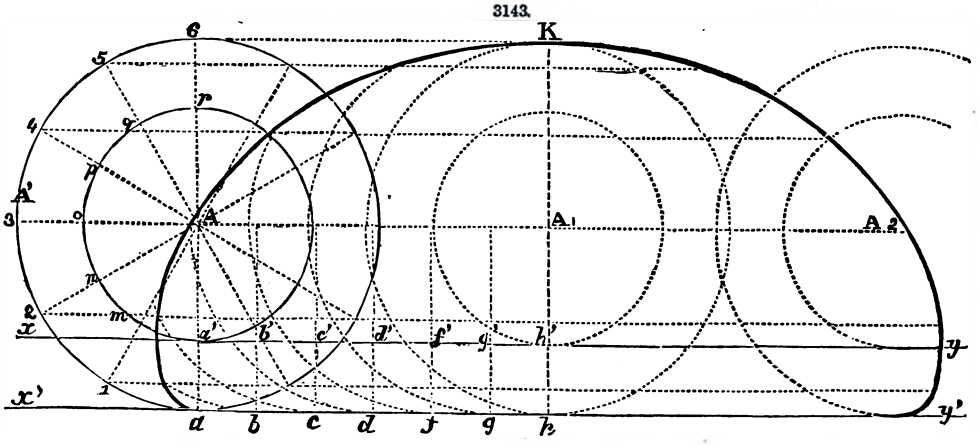

Construction.—The generating point being at starting on the perpendicular line drawn on the directrix through its point of contact with the circle A, divide the circumference of this circle into a sufficient number of equal parts to allow of each of them being considered as a straight line. Mark upon the line $x\,y$, beginning at the point a', the lengths $a'\,b'$, $b'\,c'$, $c'\,d'$ . . . equal to one of the divisions on the circumference. This done, with the radius of the generating circle, describe circumferences tangent to $x'\,y'$ in the points b, c, d . . . By producing the radii A m, A n, A o, A p . . . we get upon the circumference A′ the points of division 1, 2, 3 . . . ; through these points draw lines parallel with the directrix, their intersection with the corresponding circumferences already described gives points in the curve.

When the half of the circumference A is developed upon the line $x\,y$, the generating point has described the half of the elongated cycloid; the other may be found by analogous construction, or, since it is symmetric with the first with respect to the perpendicular K h, a certain number of points may be determined by the method already explained for the common cycloid.

The Epicycloid.—This curve is generated by the point a in the circumference of a circle A, Fig. 3144, which revolves along the circumference of a circle B, called the directing circle. The point a and the circle A are called the generators of the curve.

Construction.—If we suppose the diameter of the generating circle equal to the half of that of the directing circle, it is evident that, in this case only, the point a will have described the complete epicycloid when the circle A has arrived at that position upon the diameter $a\,a''$ which is opposite

that from which it started, that is, when it is tangent in a''. The construction given for this particular case is the same in all the others, and gives consequently an analogous curve.

3144.

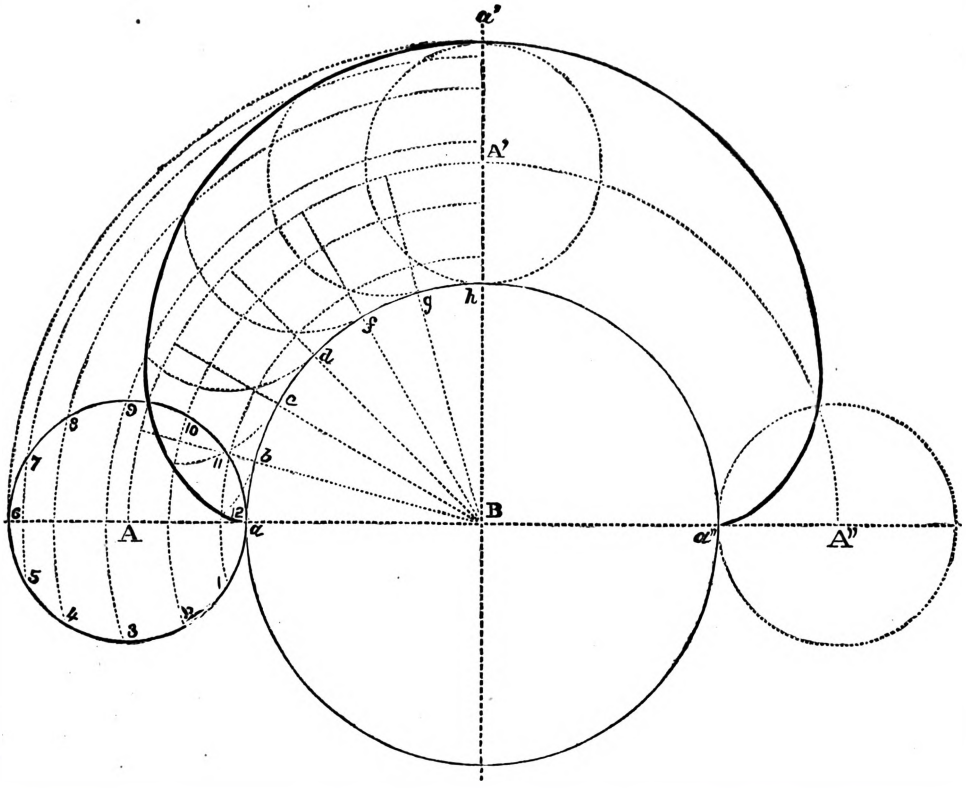

Divide now, beginning at the point a, the circumference A into a considerable number of equal parts, each of them having to be considered as a straight line. In the same way, beginning at the point a, mark upon the circumference B divisions equal to the preceding, these having to represent the development. With the radius of the generating circle describe a series of arcs tangent to the directing circle in the points $a, b, c, d \ldots$; then from the centre B with the radii B 1, B 2, B 3 . . . , describe circumferences. Their intersection with the corresponding arcs, tangent to the circle B, gives points in the curve. One of these points, m for example, is a position of the point a, for the latter must belong to the circumference tangent in c. Also when the point a has arrived at c, the generating point will evidently be upon the circumference passing through the point 3; it must, therefore, be at m, the point of intersection of the two circumferences.

The half of the curve will be described when the generating circle is tangent to the circle B at the end of the radius perpendicular to the diameter $a\,a''$. The other half of the epicycloid may be obtained by placing, by means of parallels with $a\,a''$, a sufficient number of the points of the preceding half, in a symmetrical position with respect to B a'.

The Elongated Epicycloid.—This curve is described by a point a in the plane of a circle A', concentric and invariably connected with a second circle A, which revolves along the circumference of a third circle B, called the directing circle. The point a and the circle A are the generators of the elongated epicycloid, Fig. 3145.

Construction.—Having taken the diameter of the circle A equal to the radius of the directing circle B, the circumference of the former will be completely developed upon that of the latter when it occupies the position opposite the extremity of the diameter $a\,a''$, and the point a will have described the whole curve when it is again in contact with the circumference B'. Now, to obtain points in the curve, divide the circumference A into a sufficient number of equal parts 0, 1. 1, 2. 2, 3 . . . to allow of each of them being considered as a straight line. Mark, beginning at the point a, these same divisions upon the directing circumference; then, through the points 1', 2', 3' . . . draw radii which give upon the circumference B' the points b', c', d' . . . With the radius of the generating circle describe circumferences tangent in these points.

Having produced the radii at the points of division 1, 2, 3 . . . , and obtained upon the generating circle the corresponding points b, c, d . . . , from the centre B with the radii B b, B c, B d . . . , describe circumferences the intersection of which with the arcs already drawn gives points in the elongated epicycloid.

The point a will have described the half of the elongated epicycloid, when the diameter $a'\,h'$ of the generating circle coincides with the radius B h' produced, perpendicular to $a\,a''$. The other half of the curve may be obtained by an analogous construction, or by placing the points obtained in a position symmetrical with respect to a' B'. To facilitate the construction, we mark equal parts

upon the circumference A, but it may be remarked that these parts may be unequal, provided they be transferred accurately to the directing circumference.

3145.

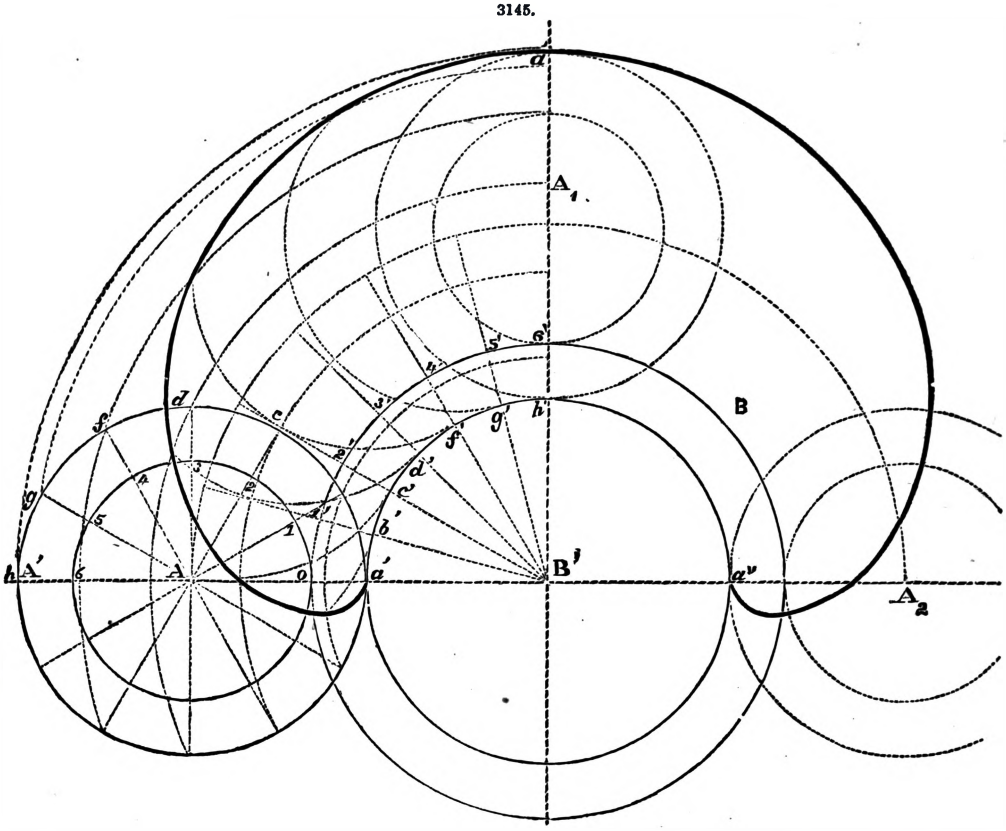

Common Hypocycloid.—This curve is described by the point a in the plane of a circle A which revolves about its own axis along the concave side of a circumference B. The circle B is called the directing circle, the circle A and the point a are the generators of the curve, Fig. 3146.

3146.

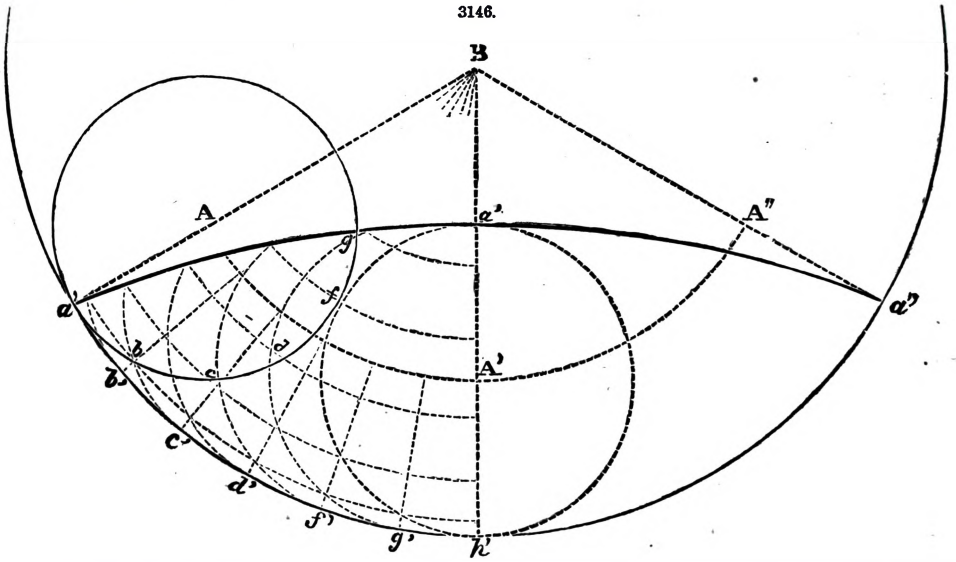

Construction.—The line of the centres B A determines by its intersection with the circumference B, the generating point a. Beginning at this point, divide the circumference A into a great number of small parts $a\,b$. $b\,c$, $c\,d$ . . . , which may be considered as straight lines. Beginning

at the same point a, mark an equal number of these parts upon the circumference B. With the radius of the generating circle describe a series of arcs tangent in the points b', c', d' . . . , and from the centre B, with the radii B b, B c, B d . . . , describe arcs the intersection of which with the former gives points in the hypocycloid. The centre of the circle A describes during its revolution a portion of a circle A A′ A″, concentric with the circle B; this is the common locus of the centres of all the arcs tangent in the points b', c', d' . . . If we wish for greater exactness than that which we obtain by considering the elements of the generating circle as straight, we may determine the development of one of them, and use this length for $a\,b'$, $b'\,c'$, $c'\,d'$ . . . This precaution is useful when the radius of the generating circle is very small with respect to the radius of the directing circle, that is, when the elements, however small they may be, form a decided curve.

Elongated Hypocycloid.—This curve is generated by the point a in the plane of a circle A′ invariably connected with a circle A, which revolves about its own centre along the inner side of a third circle B, called the directing circle, Fig. 3147.

3147.

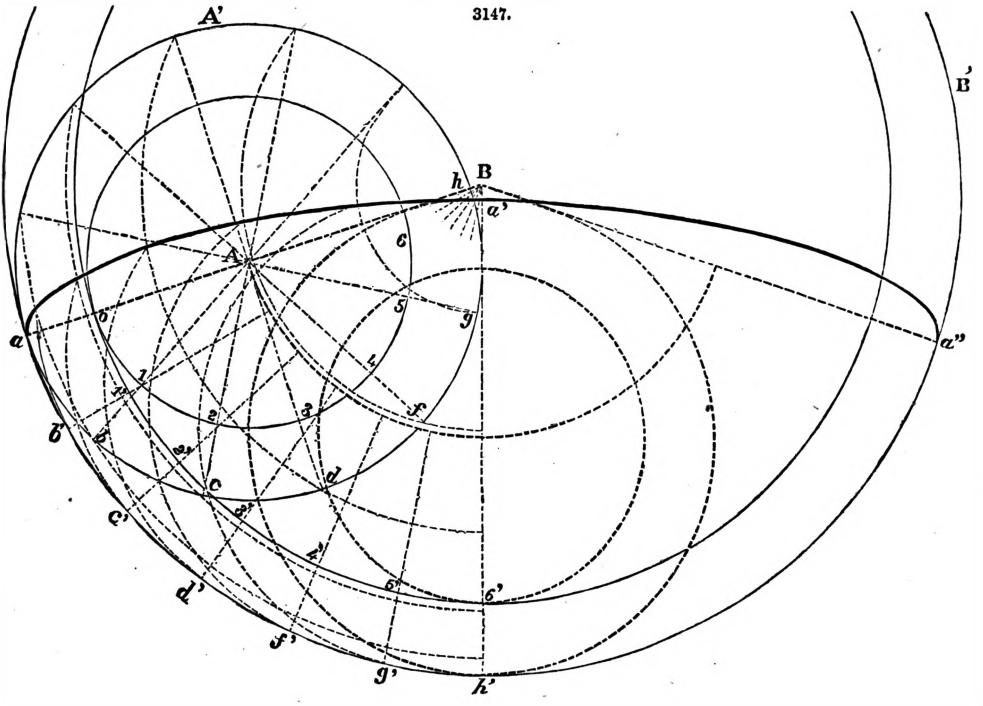

Construction.—The line of the centres A B determines by its intersection with the circumference B′ the first position of the generating point a. Beginning at the intersection o of this line of the centres with the circumference B, divide the circumference A into a sufficient number of equal parts 0. 1, 1. 2, 2. 3 . . . , each of them having to be considered as a straight line. Mark, in the same way, beginning at 0, upon the circumference B, an equal number of divisions 0. 1′, 1′. 2′, 2′. 3′ . . . representing the development of the preceding. The radii being now produced from the points of division 1′, 2′, 3′ . . . , give upon the circumference B′ the corresponding points b', c', d' . . . ; with the radius of the generating circle, describe arcs tangent in these points.

Having produced the radii A 1, A 2, A 3 . . . , and obtained upon the circumference A′ the points of division b, c, d . . . , from the centre B with the radii B b, B c, B d . . . , describe a series of arcs the intersection of which with the preceding gives points in the elongated hypocycloid.

When the point c arrives at the position c', the generating point a will be at a', and will have described the half of the curve sought. The other half may be obtained by an analogous construction, or by transferring a sufficient number of the points of the former to a symmetrical position with respect to B h'.

Another Elongated Hypocycloid.—Let there be two circles, A and A′, invariably connected together and forced to turn about their common centre A″. If in this revolution the circle A is made to follow the contour of a third circle B′, called the directing circle, the point a of the circle A will describe an elongated hypocycloid, Fig. 3148.

Construction.—Beginning at the point of intersection o of the circumference A with the line of the centres A″ B″ produced, mark upon the circumference B′ a sufficiently great number of divisions to allow each of them to be considered, without an appreciable error, as a straight line. Mark an equal number of these divisions upon the circumference A, and draw the radii from the points 1′, 2′, 3′, 4 . . . It will be seen that the centre A″ of the generating circle describes in its revolution a circle B concentric with B′. Producing the radii from the points of division 1, 2, 3, 4 . . to the circumference of this circle, we obtain the corresponding points a', b', c', d' . . . From each of these points with the radius of the circle A′ describe arcs, and from the point B″ with the radii B″ b, B″ c, B″ d . . . , describe other arcs the intersection of which with the former gives points in the curve sought.

One of these points, m for example, must occupy one of the positions of the point a, for the latter,

remaining upon the generating circle A', must belong to the arc described from the point c' with a A'' as a radius; it must also be upon the circumference described from the point B' with B'' p as a radius; it can, therefore, be only at their point of intersection.

3148.

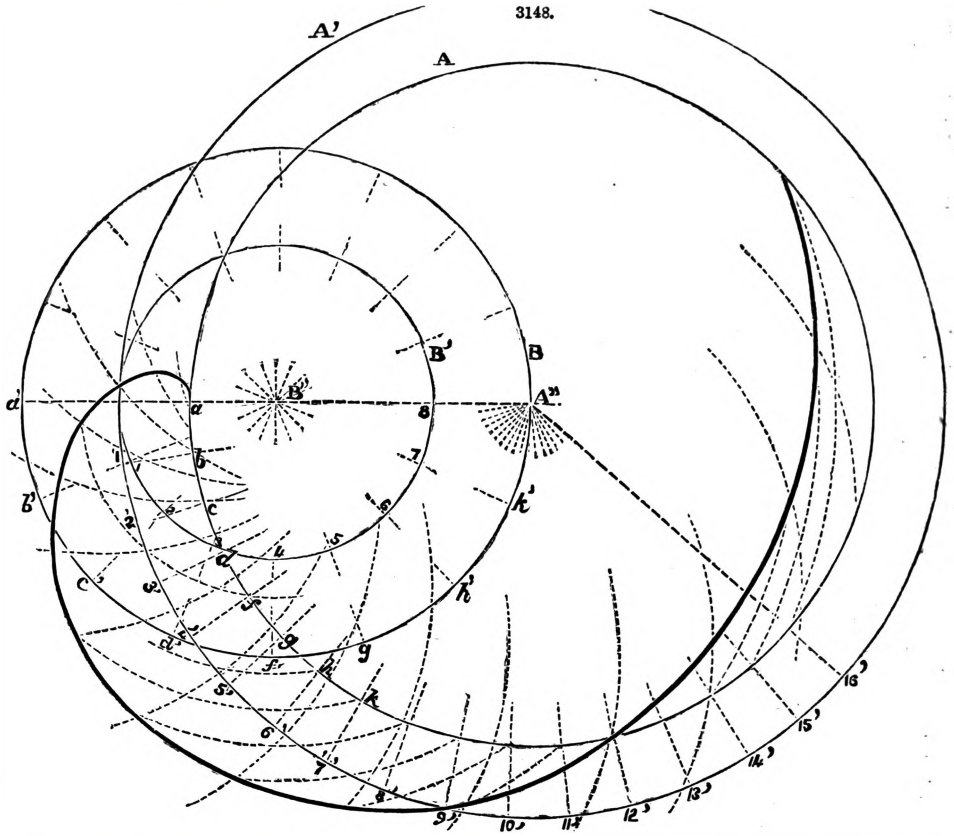

Involute of a Circle.—This curve is generated by the end of a tangent to the circle made to touch the circumference in all its points successively.

Let o A, Fig. 3149, be the radius of the given circle, and o the first point of contact of the

3149.

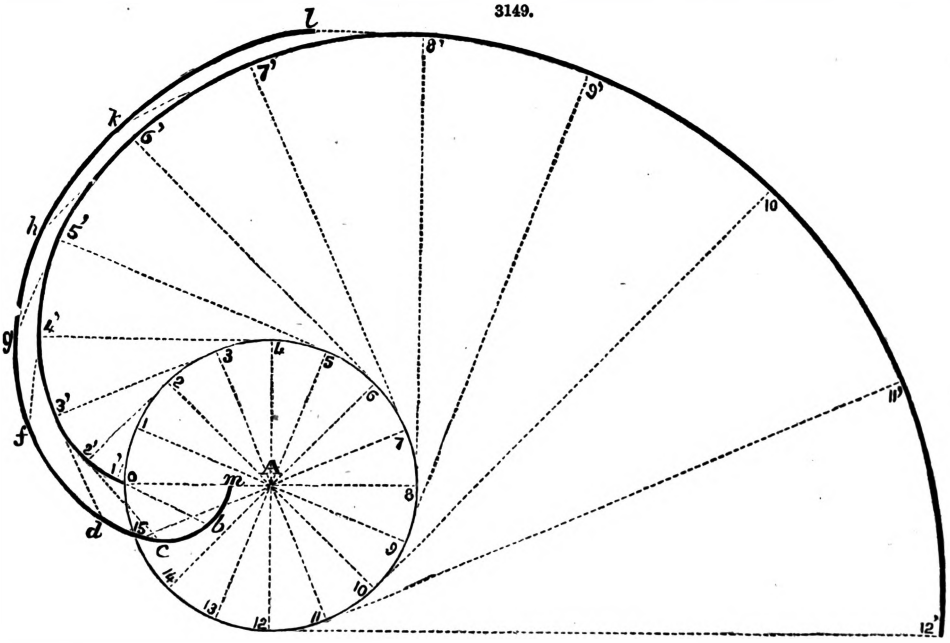

tangents. Beginning at this point, mark on the circumference a sufficient number of equal parts 0.1, 1.2, 2.3, 3.4 . . ., to allow of each being considered as a straight line. Draw the tangents from the points of division, and, upon the first, mark one of the elements or divisions of the circumference, upon the second two of these elements, upon the third, three, &c. Join by a regular curve the points 1′, 2′, 3′, 4′ . . ., thus obtained.

Elongated Involute of a Circle.—If at each of the points 1′, 2′, 3′, 4′ . . ., Fig. 3149, we draw perpendiculars to the tangents, and mark off on each of them a constant length, equal to om, for example, the points obtained, b, c, d, f . . . belong to an elongated involute of a circle.

Remark.—The common involute may be wholly traced by the compasses, for any element q', 10′ has its centre at the point of intersection p of the tangents q, q', and 10, 10′. The other curves, the means of drawing which we have already given, may be obtained by means of a little piece of wood, the arrangement of which for each case may be easily imagined.

Dimensions of the parts of Gearing considered both in Detail and as a Whole.—Object of Gearing, its Advantages.—A toothed wheel is a circle or disc furnished along its contour with projecting pieces called teeth, designed to transmit to another toothed wheel a determinate force, the direction and velocity of which are known.

Gearing is used;—

1. To transmit the continuous circular motion of a shaft to another shaft fixed at a short distance from it. When the shafts are parallel the gearing is called straight or spur-gearing. If the shafts make an angle with each other, the motion is transmitted from one to the other by means of conical or bevel-gear.

2. To transform the continuous circular motion of a shaft into a rectilineal motion of a plane-toothed surface.

3. To transform the continuous circular motion of a shaft into another circular motion of an endless screw, and *vice versâ*. In all cases the axis of the toothed wheel and that of the endless screw are placed in two perpendicular planes, and not in the same plane as in the case of conical gear.

4. The ascending motion of mill-hammers and other similar contrivances is obtained by the transformation of the continuous circular motion of a shaft by means of cams. The use and construction of these cams rest upon principles similar to those which have led to the application and to the improvement of gear.

The first attempts to transmit the motion of one shaft to another was by means of friction. This friction was produced upon cylinders or drums fixed upon the shafts. The rapid wear of the drums required them to be frequently changed, or the shafts to be brought nearer together. These grave defects, and the difficulty of removing them, led to the adoption of teeth, which have lately undergone great improvement. If these teeth are carefully constructed, we may obtain very exactly relations of speed determined beforehand, a gentle and uniform motion, and a sufficient duration of material. The use of gearing enables us to make a large number of transmissions in a small space; its application is especially remarkable in watch and clock work, where it is carried to a high degree of perfection.

Relation of Velocity to be obtained.—Primitive Circles, or Pitch-Lines.—When a rotary motion is transmitted from one shaft to another, the object always is to obtain a certain determinate velocity. This velocity results from two conditions, which are mutually dependent; 1, the primitive diameter of the wheels; 2, the respective number of the teeth of each of them.

By primitive or pitch-circles we mean those which are tangent to each other at the point a, Fig. 3150, where the contact of the two teeth which act normally, one as the power, the other as the resistance, takes place, that is, where the principal force is exerted. The relation between the radii $o\,a$, $o'\,a$ of the primitive circles must always be the same as that of the velocities; thus if it be required to make one of the wheels revolve three times while the other revolves only once, the latter must have a radius equal to three times the radius of the former.

To calculate the primitive diameters we must know;—

1. The distance of the shafts measured from axis to axis;

2. The relation between the velocity of the wheel and the velocity which the pinion is to have. The radii of the wheels must be in inverse proportion with the velocities. Indeed the circumferences are to each other as the radii; and as the numbers of teeth depend on the circumference, these numbers are also in the same proportion as the velocities. Again, as each tooth of the wheel propels forward one of the pinions, it is evident that the number of revolutions will be inversely as the radii.

Let n be the number of revolutions of the wheel and r its radius, r' the radius of the pinion and n' the number of revolutions it is to make a minute.

According to what we have said above, we have

$$n : n' :: r' : r. \qquad [1]$$

Let us suppose that $n = 14$, $n' = 42$, and the distance of the centres $= 1^{m}{\cdot}30 = r' + r$.

Proportion [1] may be put under the form

$$n + n' : n' :: r' + r : r,$$

or

$$56 : 42 :: 1^{m}\ 30 : r,$$

whence

$$r = \frac{1^{m}{\cdot}30 \times 42}{56} = 0^{m}{\cdot}975,$$

and

$$r = 1^{m}{\cdot}30 - 0{\cdot}975 = 0{\cdot}325.$$

In some cases, the velocity to be obtained differs greatly from that which we have at our disposal: if we employed only two wheels, we should have to reduce the dimensions of the pinion

too much, and sometimes to increase beyond measure those of the wheel. In such cases, we interpose between the two shafts a series of wheels and pinions, the combination of which gives the result desired. But this means should be employed only in case of absolute necessity, for we must not forget that these mediums absorb a considerable quantity of the motive force.

3150.

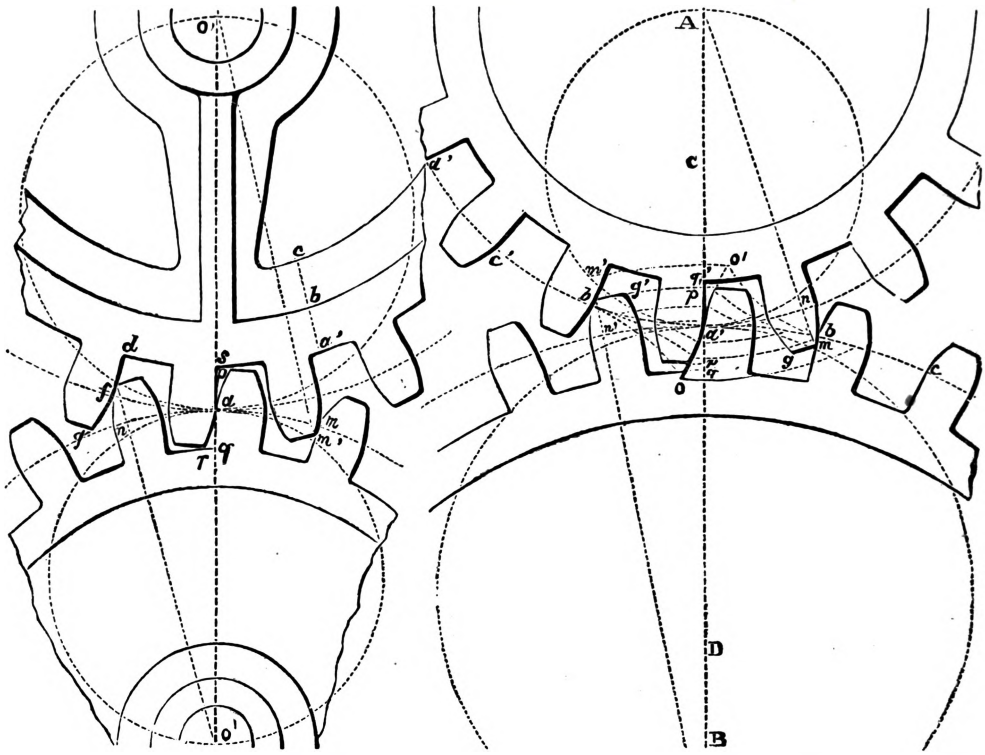

Let us suppose that the shaft B is to make sixty-four revolutions while the shaft A makes one. If, for the sake of simplicity in execution, we make all the wheels of the same diameter, and the pinions also equal to each other, we extract a root of the number of revolutions required; the index of this root will represent the number of couples to be employed, and the root itself will denote the constant proportion between the primitive diameter of the wheels and those of the pinions. Thus if the square root of 64, which indicates the employment of two couples and gives as the proportion of the radii 8 : 1 does not appear applicable to the case required, we may take the numbers given by the cube root, that is, three couples in the proportion of 4 : 1.

When particular arrangements oblige us to employ different proportions for the couples of gearing, we resolve the number of revolutions to be obtained into several factors, choosing those which are the most convenient. Thus for the case we have alluded to above, three couples in the proportions of 2, 4, and 8 would give the velocity required.

Dimensions and Form of the Teeth.—In constructing the teeth we must have in view;—1, the thickness of the tooth; 2, the space between the teeth; 3, the distance of the teeth; 4, the number of the teeth; 5, the depth of the face; 6, the depth of the shoulder; 7, the form of the teeth; 8, the total depth.

1. *Thickness of the Teeth.*—The thickness of the teeth depends entirely upon the force they have to bear and the nature of the material of which they are made. The force should always be taken for the case in which the wheels would have to transmit the maximum power of the motive engine. In calculating the thickness of the teeth the results of experience must be referred to, and we must suppose the case of only one tooth in contact, that is, supporting alone the whole force.

Example.—A pinion makes six revolutions while the wheel which drives it makes one; the distance of the centres is $2^{m} \cdot 30$; the work effected is 940 kilogrammètres, and the wheel has a velocity of five revolutions a minute. Determining the radius of the wheel in the way we have described, we find it to be equal to $1^{m} \cdot 917$.

The velocity at the primitive circumference or pitch-line will therefore be

$$\frac{1 \cdot 917 \times 2 \times 3 \cdot 14 \times 5}{60} = 1^{m} \cdot 003.$$

The force is found by dividing the work to be transmitted by the velocity

$$\frac{940}{1 \cdot 003} = 937 \text{ kilogrammètres.}$$

Now, to find the thickness of the tooth, we multiply the square root of 937 by a coefficient determined by experience.

For cast iron	0·105
For bronze	0·131
For hard wood	0·145

Thus the teeth being of cast iron, their thickness will be $0{\cdot}105 \times \sqrt{937} = 0^{m}{\cdot}032$.

2. *Space between the Teeth.*—If the teeth were made with mathematical precision, the space between two of them measured upon the pitch-line might be made equal to the thickness. When the teeth are filed the space is taken equal to the thickness plus $\frac{1}{15}$. This fifteenth is intended to correct the defects resulting from the imperfection of the work. When the teeth are unsmoothed or of different materials, the space is made equal to the thickness plus $\frac{1}{10}$.

3. *Distance of the Teeth.*—The arc of the primitive or pitch-circle comprising a space and a tooth, that is, the distance from the outside edge of one tooth to the outside edge of the next, constitutes what is called the distance of the teeth.

It is evident that this distance must be the same upon the wheel and upon the pinions, and that it must be taken an exact number of times upon each of the two circumferences.

4. *To Calculate the Number of the Teeth.*—Let m' be the number of the teeth on the wheel; m the number on the pinion; a the distance of the teeth, and r the radius of the wheel. We will continue to operate with the values given in the preceding example. The number of teeth is evidently equal to the pitch-line divided by the distance of the teeth. Therefore

$$m = \frac{2\pi r}{a};$$

but
$$a = 0^{m}{\cdot}032 + (0{\cdot}032 + 0{\cdot}003) = 0^{m}{\cdot}067,$$

and
$$r = 1^{m}{\cdot}917;$$

therefore
$$m = \frac{6{\cdot}28 \times 1{\cdot}917}{0{\cdot}067} = 180.$$

This number is exactly divisible by the ratio 6 of the radius of the wheel and that of the pinion, which is a necessary condition, since the numbers of the teeth must be to each other as the primitive or pitch-circles, and consequently as their radii. Besides this, symmetry and readiness in putting together require, if the wheels are in several pieces, that the number of teeth be exactly divisible by the number of the arms of the wheel. In the present case, supposing six arms, the number 180 would fulfil the second condition also. In the contrary case, we take the number next smaller than that given by calculation, which is at once divisible by the number of arms and the ratio between the radius of the wheel and that of the pinion. This modification can never be attended with any objectionable result, since the teeth are taken a little stouter than the preceding operation indicates.

5, 6, and 7. *Shoulder and Face of the Teeth; Form of the Profile.*—The part $d f$ of the profile included between the primitive circumference and the base of the tooth, is called the shoulder; it is always formed by the radius from the point f, Fig. 3150. The part $f g$ of the same profile standing beyond the primitive circle is called the face of the tooth.

The depth of the shoulder depends on that of the face, and this latter is determined by considerations which we shall come to presently.

In the motion of two wheels, the shoulder alone of a tooth comes into contact with the faces of the teeth of the other wheel. If the gear turned always in the same direction, in other words, if the same wheel always drove, this one alone would require for the faces of its teeth the particular forms adopted in their construction. But in almost all cases the wheels drive and are driven alternately; thence arises the necessity of providing each of them with a face.

8. *Limit to the Teeth.*—The limit to the depth of the teeth results from important considerations, which we will now proceed to consider merely from a practical point of view.

The teeth must be long enough to allow two couples at least to be in contact at the same time, for if the force be exerted upon only one tooth of each wheel, the whole work of a mill or of a machine will be subordinated to the rupture of this tooth. If, on the other hand, too large a number of teeth be in contact at one time, we shall find that their contact is one in appearance rather than in reality, for it is almost impossible to execute the work with such precision that all the teeth shall act simultaneously. Thus care must be had to have two teeth always ready to come into contact when two others are on the point of quitting each other. This result is obtained by limiting the teeth, the length of which depends upon what is sometimes called the driving arc. By driving arc is meant that arc in which a tooth moves while it is engaged in driving the one against which it presses. Thus in Fig. 3150 this arc would be the arc $m a n$ described upon the pitch-line by the point n from the moment when one tooth begins to press upon its neighbour till the moment when it ceases to act. In practice, and for gearing of ordinary dimensions, this arc may be taken equal to the distance of the teeth, on each side of the line of the centres.

Thus to limit the teeth of the wheel, take upon the pitch-line of the pinion the arc $a m$ equal to the distance of the teeth, and draw the radius $o' m$, cutting in m' the circumference described upon $o' a$ as a diameter. The circumference described from the centre o with $o' m$ as a radius will limit all the teeth of the wheel. This circumference and that which determines the extremity of the teeth of the pinion meet the line of the centres in the points $g p$; beginning at these points, mark upon the line of the centres towards o' and o, the lengths $q r$ and $p s$, equal to about $\frac{1}{4}$ of the depth of the face for large gear, and $\frac{1}{3}$ for small gear. Then from the points o and o' with $o s$ and $o' r$ as radii, describe circumferences forming the bottom of the spaces between the teeth, and determining

in profile the base of the teeth. To avoid a re-entering angle, that which is formed by the bottom of the space and the side of the tooth is slightly rounded.

This method of limiting the teeth is quite practical, and may be modified to suit the cases of the epicycloid and the involute.

Remark.—It may happen that we are obliged to employ a pinion of a very small diameter to transmit a great force, or a wheel of a very large diameter for work of inconsiderable importance. In the former case, if the driving arc were equal to the distance of the teeth on each side of the line of the centres, the teeth would be very long, and would, consequently, become too thin at their extremities. We must, therefore, take the arcs described during contact equal to $\frac{3}{4}$ or $\frac{4}{5}$ or even $\frac{1}{2}$ if necessary. In the case in which the wheels are large to transmit a small force, we should obtain by the foregoing method, teeth much too short; we must therefore take the arc of contact equal $1\frac{1}{2}$ the distance of the teeth. It is advisable, however, if the size of the teeth be increased, not to give it more than $1^m \cdot 5$ of the breadth taken upon the pitch-circle.

If the dimensions of a pinion are such that the number of teeth would be less than fifteen, it is preferable to employ several couples. The endless screw may be substituted for the pinion when the wheel is to be driven by it, especially if the force to be transmitted is great and the velocity to be obtained rather low.

It frequently happens that a wheel with wooden teeth works into a pinion wholly of metal. In this case the wooden teeth are evidently stouter than the iron teeth, since their thickness b is given by the formula $b = 0 \cdot 143 \sqrt{P}$, whilst that of the teeth of the pinion is expressed by $b = 0 \cdot 105 \sqrt{P}$, P representing the force to be transmitted. It follows from this that the spaces on the pinion are greater than those on the wheel to give passage to the cogs. Nevertheless, the distance of the teeth must remain the same in both wheels.

Breadth of the Teeth; particular arrangements.—The length of the teeth in the direction of the axis is commonly equal to four, five, or six times the thickness upon the pitch-line, according as the velocity is to be small, greater than $1^m \cdot 75$ a second, or the gear constantly wet. It does not interfere in any way with the wear of the gear or the regularity of the motion, to increase the breadth of the teeth, or at least to increase it in small degree above that indicated. Generally when this breadth exceeds certain limits, in large wheels with wooden teeth, the teeth are separated into two equal parts in the direction of the breadth of the circumference of the wheel, and these parts are so arranged that one is opposite the space between it and two others. In this way we have upon the same wheel two sets of gear quite distinct though perfectly similar and acting together. By this means we get between the mortises into which the teeth are fixed, a solid space in the middle of the rim of the wheel, which adds to its strength. When a wheel so constructed works into an iron pinion, the model of the latter is made so as to have its teeth placed inversely as those of the wheel.

Gear intended to transmit to four pumps the work of an engine of 60 horse-power is arranged in the manner described above, and each part has a breadth equal to four times its thickness upon the pitch-line; this gives eight times the thickness for the total breadth, supposing the teeth not crossed, but made of a single piece or placed end to end.

The parts of the teeth that enter the mortise are a little smaller than the teeth themselves measured at the base, so that the shoulder resulting from this difference rests upon the periphery of the wheel. The ends of the teeth project on the inner side by a quantity equal to the depth at the crown measured in the direction of the radius. There result from this, spaces having the form of equal trapeziums, into which are placed, in the manner of dove-tailing, pieces of wood that are afterwards fixed to the teeth by means of screws.

Dimensions of the Periphery, and Number of Arms of Toothed Wheels.—Instead of being placed upon the periphery of a solid disc, the gear forms part of an iron rim $a' b$, Fig. 3150, connected with the axle by a certain number of arms. The breadth of this rim is equal to the breadth of the teeth when the whole is of metal. When the teeth are of wood the rim is made broader by a quantity equal to twice their thickness, in order that it may not be too much weakened by the mortises; its thickness should be at least equal to that of the tooth. In gearing which is exposed to violent vibration, these dimensions must be increased; experience and the quality of the metal must in such cases determine the degree.

Whatever be the section of the rim, it is provided on the inside and in the middle of its breadth with a moulding or rib $b\,c$, the two dimensions of which, projection and thickness, are equal to the thickness of the rim itself. By proceeding in the above manner for wheels of a large diameter intended to transmit a small force, we should obtain too thin a crown, and liable to twist out of shape while cooling after casting. To avoid this defect it must be made a little stouter, and if necessary the number of the arms increased.

The number of arms to be given to wheels depends on their diameter. Those of $1^m \cdot 50$ and less have four arms, those of from $1^m \cdot 50$ to $2^m \cdot 50$ have six, and those from $2^m \cdot 50$ to 5 mètres have eight. If it is necessary to employ wheels of from 5 to 7 mètres, a case that seldom occurs, we may increase the number of arms to ten.

It is customary to give to the arms of wheels a section exactly equal to that of the rim, and they are strengthened on each side by a rib of the same thickness as that of the crown, and running into the latter. If any space remains between the bases of the arms, the rib runs round the centre or nave.

Methods of Tracing the various Forms of Gear.—Epicycloidal Gear.—We have shown the different principles upon which the construction of gear and the calculation of its dimensions rest; we will now point out the rules generally followed in tracing it.

It is known that when a circle is made to roll upon another circle, any point in its circumference describes an epicycloid. The motion which produces the curve is subject to the same laws as that of two tangent circumferences revolving about their centres when the latter are fixed. It follows from this that if we give the epicycloidal form to the profile of the teeth, the wheels will be driven

by each other in the same manner as they would be by simple contact. This form is sometimes adopted. Suppose now we have to construct a spur epicycloidal gear with the following data;—

Distance of the centres	$0^m \cdot 267$
Ratio of the velocities	$\frac{3}{5}$
Distance of the teeth	$0^m \cdot 035$

Take A B, Fig. 3150, equal to $0^m \cdot 267$, and divide this line into two parts a A and a B, so that they may be to each other as 3 is to 5. The circumferences described with a A and a B as radii are the pitch-lines of the gearing. The length or development of the circumference of the wheel is expressed by $2 \pi a$ B, or $6 \cdot 28 \times 0 \cdot 167 = 1^m \cdot 049$; and the number of teeth is given by $\frac{1 \cdot 049}{0 \cdot 035} = 30$.

The pitch-line of the pinion being $2 \pi a$ A, or $6 \cdot 28 \times 0 \cdot 100 = 0^m \cdot 628$.

The number of teeth is $\frac{0 \cdot 628}{0 \cdot 035} = 18$.

The division of $1 \cdot 049$ and $0 \cdot 628$ by the distance of the teeth cannot be exactly performed, but the approximation is such that the error of calculation when spread over all the divisions may be neglected. Also by taking the radius a B equal to $0 \cdot 167$ instead of $0 \cdot 66875$, and the radius a A equal to $0 \cdot 100$ instead of $0 \cdot 100035$, we make the error $\frac{1}{8}$ millimètre at the most.

Mark now, beginning at the point of contact a upon the circumference a B, the lengths $a\,b$, $b\,c$, $c\,d$ . . . , equal in development to $0^m \cdot 035$; mark off also these divisions upon the circumference a A, beginning at the same point a, then, upon the radii a B and a A as diameters, describe circumferences, and determine a fraction $a\,o$ of the epicycloid generated by the point a, supposing the circumference a D to roll upon the primitive circumference or pitch-line of the pinion. The face of the tooth of the pinion will be taken upon $a\,o$, and the shoulder upon the radius a A. If we now draw the radii through the points of division, and to each of these points bring the curve $a\,o$ with its concave side turned towards the axis of the tooth, we shall get all the profiles. The faces of the teeth of the wheel are determined by constructing the portion $a\,a'$ of the epicycloid described by the point a while the circumference a C is rolling upon the pitch-line of the wheel, and by bringing this curve to the end of the radii of the points b, c, d . . .

The depth of the teeth depends, as we have seen, upon the duration of contact or driving arc. If it be required to have always three teeth engaged, this arc must be made equal to the distance of the teeth of each side of the line of the centres. Thus a K being the distance of the teeth, the epicycloid which begins at K must be produced until it meets the circumference D a in m. From the point A as a centre, with A m as a radius, describe a series of arcs such as $m\,g$, which will limit all the teeth of the pinion. This operation is performed in the same manner for the wheel. The circumferences which limit the teeth of both wheels meet the line of the centres in the points p and q; mark off, beginning at these points and in the direction of the centres, the lengths $p\,q$ and $p'\,q'$ equal to $\frac{1}{4}$ or $\frac{1}{5}$ of the projection of the tooth upon the pitch-line. The circumferences described from the points B and A with B q and A q' as radii, will determine the bottom of the spaces between the teeth on the wheel and on the pinion. It only remains then to round slightly the angles formed by the periphery of the wheel and the sides of the teeth.

Remark.—Epicycloidal gear has the grave defect of being able to drive only one wheel, or if it drive several, they must be all of the same diameter. The faces of the teeth of the pinion are in fact obtained by the rolling upon its primitive circumference of a circle having as its diameter the radius of the primitive circle of the wheel. Thus the curve generated for different pinions will vary with their diameter. Again, the faces of the teeth of the wheel are determined by the rolling upon its primitive circumference of different circles having as diameters the radii of the pinions. The curves generated all comply separately with the requirements of the question, but none can be employed to drive the system. Consequently, it is better in this case to renounce the form of the epicycloid, and to employ the involute, which does not possess the same defect, as we shall have occasion to show presently. The epicycloidal form may be made use of, however, in the case of which we have been speaking, by taking a generating circle having as a diameter the radius of the smallest pinion, and by causing it to roll successively upon the primitive circumference of the wheel, and upon that of each of the pinions which it is to drive.

Cylindrical Gear.—This kind of gear which the French call from its form, *lantern gear*, is vicious from several points of view, and its use has been almost wholly abandoned. We will, however, point out the principle of its construction, as cases now and then occur in which it is necessary to employ it.

In this kind of gearing the pinion is provided, in the place of teeth, with cylindrical spindles, such as C, Fig. 3151, all of which have their centres upon the primitive circumference B. The driving wheel is provided with teeth or cogs, the profile of which we are about to determine.

Let A be the primitive circumference of the wheel and B one of the positions of the lantern gear. Suppose the wheel A fixed, and make the circle B roll round it until it comes into the position B'. During this motion the centre of the spindle will evidently describe an epicycloid d, and its new position a' will belong to this curve, and to the circumference B'. The tracing of gear rests theoretically upon this principle, namely, that the normal common to the point of contact of two conjugate teeth, passes through the point of contact of the primitive circles. If, therefore, from the point a'' we draw a normal $a''\,a'$ to the circumference C', we shall obtain the corresponding point b of the tooth of the wheel, that is, the point in which the contact of the cog and the spindle will take place. If now we bring back the circle B' to its former position B, the point b will describe during the motion a curve d' equidistant from d, which curve gives the true form to be adopted for the profile of the cogs of the wheel A.

It is now easy to show that this kind of gear is defective. Let C'' be a position of the spindle, and d'' the corresponding position of the tooth in contact. If the motion is in the direction of the

arrows, it is clear that the curve d' will not drive the spindle, but that it must be driven by it. Thus, *before the line of the centres, the cog cannot drive the spindle.* If the motion of the wheels is in the contrary direction, it will be seen in like manner that *beyond the line of the centres, the spindle cannot drive the cog.* This kind of gear is, therefore, very incomplete, and it must remain so, for if both branches of the curve were employed, the motion could not pass the line of the centres.

3151.

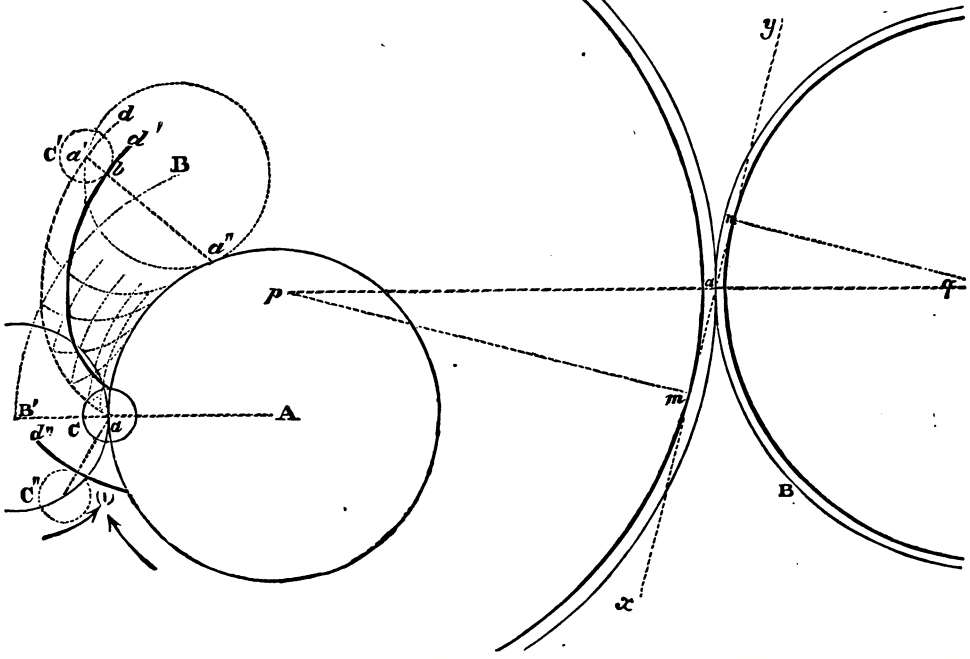

Practical Method for Epicycloidal Gear.—When the wheels are large and the teeth consequently long, in order to preserve to the curve which forms a part of the profile its particular character, it is usual to execute a portion of the drawing in full size, and to make a model from it, by means of which that form which has been graphically obtained, may be transferred exactly to the wheel.

Generally the teeth are short enough to allow of their curve being considered, without an appreciable error, as an arc of a circle. This radius of this arc must not be taken arbitrarily; and besides this, the centre of curvature must be properly placed. The common radius of the arcs for the teeth of the same wheel, and the geometrical locus of all their centres, are determined by the following construction, which gives a most satisfactory result.

The pitch-lines A and B, Fig. 3151, being given, draw through their point of contact a straight line $x\,y$, making with the line of the centres $p\,q$ an angle of 75°; draw also from the centres p and q to $x\,y$ the perpendiculars $p\,m$, $q\,n$. The magnitudes $a\,m$ and $a\,n$ are the radii, and the points m and n the centres of the arcs which may be substituted for the epicycloid in the profile of the teeth. It is very evident that the circumferences described with $p\,m$ and $q\,n$ as radii will contain all the centres, and if care be taken to mark them beforehand when the wheels are on the axle, the operation of tracing the teeth will be quickly performed.

Involute Gear.—Let Bg and Ag, Fig. 3152, be the radii of the pitch-lines of the wheel and pinion, determined according to the data, and in the manner we have already described. Let us take as the profile of the teeth of the pinion, the involute $c'\,b'$ of a circumference, Ap interior to Ag, and determine the conjugate curve. If we draw through the point g a normal $x\,y$ to $b'\,c'$ the point of intersection a is the point in the conjugate tooth where its contact with that of the pinion is to take place. Again, as it is an established geometrical fact that every normal to the involute is tangent to the evolute, it follows that the line $x\,y$ is tangent to the circumference Ap at the end of the radius An. Having drawn the perpendicular Bm, and taking this line as a radius, we describe a circumference, the involute $c\,a\,b$ of which is the curve conjugate with $c'\,a\,b'$. It may be easily demonstrated that the evolute of $c\,a\,b$ must be the circumference Bm.

The triangles $a\,n\,q$, B$m\,q$ being similar, their homologous sides are proportional; but as Ag, Bg, and An are constant, Bm remains constant, and must be the radius of a circle. The two radii An and Am are to each other as those of the pitch-lines Ag and Bg. The locus of the points of contact of the teeth is the line $x\,y$; but in practice, contact can take place only on the portion $m\,m$ of this line. Theoretically, the angle $a\,g\,x$ may be arbitrary, but it is usually made equal to 75°. Some millwrights take from the point g upon the pitch-line Ag, an arc $g\,h$ K equal to twice the distance of the teeth; the line Kq produced is then the common tangent of both circumferences. We have now only to divide the pitch-lines in the manner described when treating of epicycloidal gear, and to shape the teeth by the involutes passing through the points of division.

In this kind of gear the driving force is exerted throughout the whole length of the line $m\,n$, and, consequently, before and beyond the line of the centres. It may be remarked that a wheel of this kind plays no part in the construction of the conjugate wheel; it follows, therefore, that it possesses the valuable property of being able to drive at once several wheels of the same kind, of different diameters. This system works well after the shafts have been forced a little beyond their original position, and is, therefore, suited to rolling mills and similar machines.

3152.

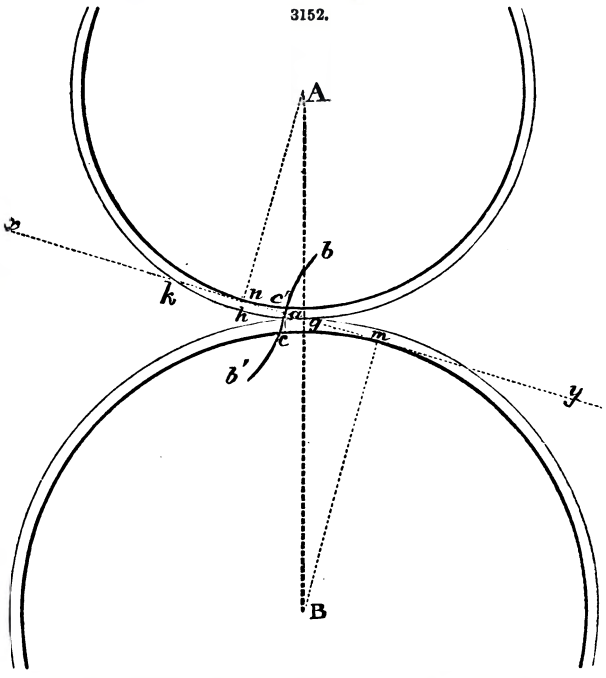

Inner Gearing.—When the motion of two parallel shafts is to take place in the same direction, we cannot employ two wheels both toothed on the outer circumference; one of them, necessarily the larger, is toothed on the inner side. In this system the profile of the teeth differs from that which we employ in the other cases, and that on account of the following considerations.

In epicycloidal gear the shoulder of the tooth is generated by the rolling, on the inner side of the primitive circumference, of a circle having only half its diameter. The force is generated by a point of a circle rolling externally upon the same circumference. The forms of the shoulder and face may be made to run into each other, and it is easy to cut the material to the profile given by the drawing. If we adopt the same method for the inner gear, impossibilities arise in practice which oblige us to abandon the system of reciprocal shoulders. The only admissible solution of the difficulty consists in giving shoulders to the teeth of the pinion and curves to the wheel.

Suppose now we have to construct an inner gearing with the following data

Distance of the centres	$0^{m}\cdot100$
Distance of the teeth	$0^{m}\cdot035$
Ratio of the velocities	$\frac{1}{2}$

If r and n represent the radius and the number of revolutions of the wheel, r' and n' the radius and number of revolutions of the pinion, we have the proportion $r : r' :: n' : n$.

According to the data, $n' = 2\,n$; therefore $r = 2\,r'$.

But the distance of the centres $d = r - r' = 2\,r' - r' = r'$; therefore the radius of the pinion is equal to d or $0^{m}\cdot100$; and that of the wheel $r = 2\,r' = 0^{m}\cdot100 \times 2 = 0^{m}\cdot200$.

Having acquired these data, continue the operation in the following way;—

Describe the pitch-lines A a and B a tangent in a. From this point a divide the pitch-line of the wheel into parts $a\,b$, $b\,c$, $c\,d$ . . . , equal to the distance of the teeth or to $0^{m}\cdot35$. Mark in the same way, beginning at the point a, these same divisions upon the circumference of the pinion in $a\,b'$, $b'\,c'$, $c'\,d'$ . . . , then, having determined the thickness of the teeth with respect to the space between them, transfer it from the points a, b, c . . . , and a, b', c' . . . , to $a\,1$, $b\,2$, $c\,3$ . . . , and $a\,1'$, $b'\,2'$, $c'\,3'$ . . . Through these points of division in the pitch-line B a, draw radii such as B 1, which determine the profile of the teeth of the pinion, since they consist wholly of shoulder.

The teeth of the wheel may be obtained in the following manner;—

Upon the radius B a as a diameter describe a circle a C, and, in order not to crowd the diagram, take a second position a' C' of this circle; determine a portion $a'\,m$ of the contracted epicycloid described by the point a', whilst the circle C' a' is rolling upon the inner side of the pitch-line of the wheel. Transfer this curve to all the points of division a, b, c, d . . . , 1, 2, 3 . . . , placing the concave side towards the middle of the tooth. Having completed this operation, it only remains to limit the teeth. Those of the wheel are taken long enough to have at least three couples always in contact, and they are limited by the circumference described upon A p as a radius.

The teeth of the pinion do not terminate at the primitive circumference; they would terminate at the intersection of this circumference with the radii in sharp angles, which would have an injurious effect upon the teeth of the wheel. The profile of the shoulder is continued by arcs of circles, such as $a\,n$, which run into other arcs described with B n as a radius. We have now only the bottom of the spaces between the teeth, or in other words, that portion of the periphery of the wheel that is comprised between two teeth, to determine. The play $p\,g$ and $p'\,g'$ depends on the dimensions of the gear and on the care bestowed on its execution: the amount of play being decided upon, describe with the radii A g' and B g a series of arcs such as $g'\,f$ and $g\,f$. It is well to make the tooth join the periphery by a curve rather than to enter it at right angles.

Rack and Pinion.—If we suppose a toothed wheel to increase in diameter indefinitely, the disc which bears the teeth will become a straight surface, and its circular motion will evidently be

converted into a rectilinear motion, since in the proportion $r : r' :: n' : n$, r being equal to infinity, n will be equal to zero. The straight surface which receives a rectilinear motion is called a rack.

3153.

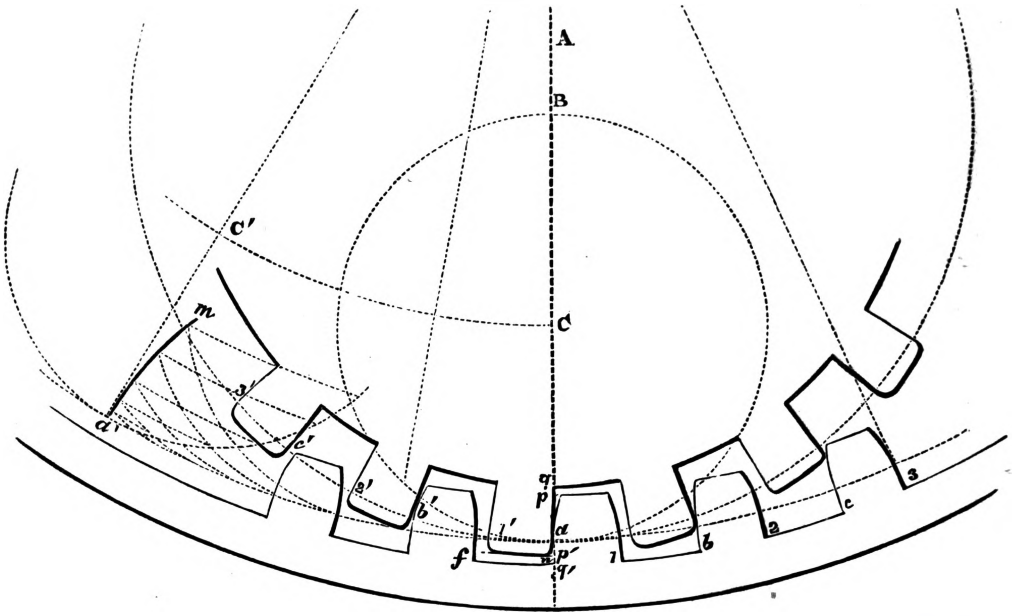

Let A a, Fig. 3154, be the pitch-circle of the pinion, and $x\,y$ the pitch-line of the rack, tangent in the point a. Divide, from the point a, the circumference A a into parts $a\,b$, $b\,c$, $c\,d$ . . . , equal to the pitch or distance of the teeth, and mark these same divisions upon $x\,y$. From the points a, b, c . . . , and a', b', c' . . . , mark the thickness of the teeth at $a\,1$, $b\,2$, $c\,3$ . . . , and $a\,1'$, $b\,2'$, $c\,3'$ . . . The radii from the points a, b, c . . . , 1, 2, 3 . . . , determine the shoulders, or as they are often called, the *flanks*, of the teeth of the pinion, and those of the rack may be obtained by drawing perpendiculars to $x\,y$ through its points of division.

3154.

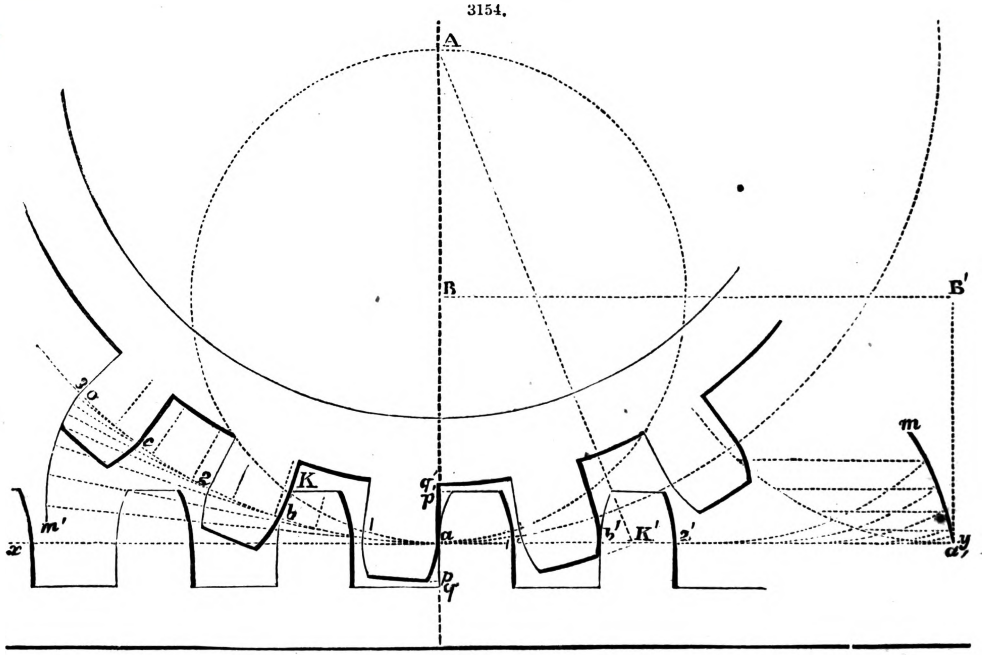

If now we suppose the line $x\,y$ to move about the pitch-circle of the pinion, its first point of contact will describe an involute of this circle, which should be taken as the profile of the teeth. Having determined a portion $o\,m'$ of the curve, we have only to bring it to each of the points of division in the circumference A a.

To shape the teeth of the rack we take a portion $a'm$ of the cycloid generated by the point a of a circle B a, described upon the pinion as a diameter, and rolling upon $x y$. To limit the teeth of the rack we usually take a length $a b'$ equal to the pitch, describe the cycloid at the point b', and produce it till it meets in K the generating circle B a. The line parallel to $x y$ drawn through the point K gives the extremities of the teeth. The teeth of the pinion are limited by the circumference of a circle described with the radius b K', and determined by the position of the point K upon $x y$. The length $a k$ is usually taken equal to the distance of the teeth, but it may be altered if it is seen that there are too many teeth in contact or that the force is exerted upon too small a number of teeth.

To complete the drawing we take upon the line A a, beyond the extremities of the teeth, the short distances $p q$ and $p'\eta i'$ to represent the play to be allowed at the bottom of the spaces. The circumference described with A q' as a radius, and the parallel to $x y$ drawn through the point q, determine the roots of the teeth.

Bevelled Gear.—When it is required to transmit the circular motion of a shaft A B, Fig. 3155, to another A C, making with it any angle B A C, conical or bevelled gear is employed. This kind of gear possesses the same properties as the spur-gear. Suppose, for example, the two axes A B and A C given, as well as the ratio $\frac{m}{n}$ of the number of revolutions, at the points a and c taken arbitrarily upon each of the axes, raise the perpendiculars $a b$, $c d$; take upon $a b$ a length $a g$, and upon $c d$ a length $c f$, proportional to m and n. Through the points g and f draw $g h$ and f K parallel to the axes; the point of intersection o determines, with the summit A, the generatrix of contact A D. The perpendiculars $o k$ and $o l$, drawn from the point o to the axes, represent the radii of the bases of the cones or teeth.

Denoting the velocity of the motion by V, the angular velocities of the pinions by V'_1 and V_1, and the radii by R and R', we have $V = V_1 R$, and $V = V'_1 R'$. But as the velocity V is dependent upon each of the pinions, we get the equation $V_1 R = V'_1 R'$, from which we deduce the proportion $V_1 : V'_1 :: R' : R$. Thus in bevelled as in spur-gear, the angular velocities are inversely proportionate to the radii.

3155.

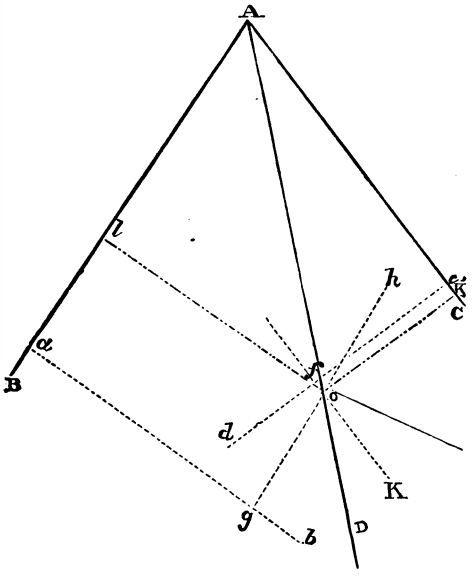

3156.

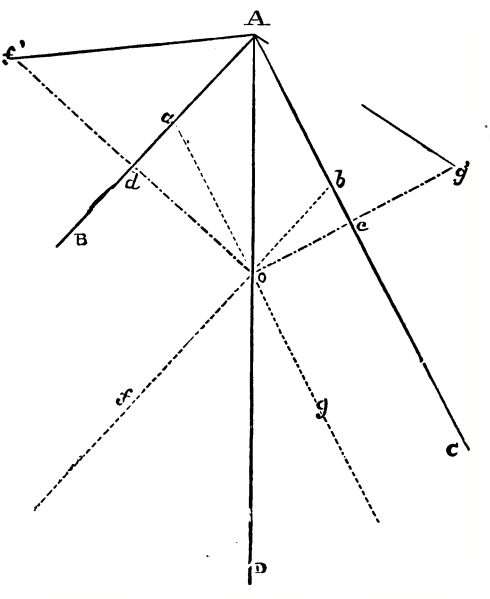

But, the two axes and the ratio of the velocities being given, we may determine the generatrix of contact in the followirg manner;—Upon the axis A B, Fig. 3156, take A a equal to m, and upon the axis A C, $a b = n$; through the points a and b draw $a g$, $b f$, parallel to the axes; the point o in which they meet belongs to the generatrix of contact. If we let fall upon the axes through the point o, the perpendiculars $o c$, $o d$, we get two similar triangles, which give the proportion $o d : o c :: o a : o b$; but $o a = n$ and $o b = m$; substituting these values, we have $o d : o c :: n : m$. Therefore the radii $o d$, $o c$, or the diameters $o f'$, $o g'$, fulfil perfectly the condition required.

Let us now execute a drawing of two bevelled wheels by means of the following data;—The angle B A C, Fig. 3157, is equal to 82°. The ratio of the velocities is $\frac{2}{3}$, and let E be the force to be transmitted.

By operating in the way described above, we easily obtain the generatrix of contact A D. Upon this line we determine a point a, such that the perpendiculars $a s$, $a t$, let fall upon the axes, may be to each other as 2 is to 3. By taking $s b' = a s$ and $t b = a t$, we have the primitive diameters of the bases of the cones. Through the point a draw $o o'$ perpendicular to A D; in this way we get two cones $o a b$ and $o' a b'$ which will limit the base of the gear. Having calculated the thickness of the teeth, and consequently the pitch, according to the force F in the manner described for spur-gear, take a length $a a'$ varying between three and four times the thickness of a tooth, according to the nature of the metal employed and the conditions in which the pinions work.

Draw through the point a', $m\,n$ perpendicular to A D, and $a'\,c$, $a'\,c'$ parallel to $a\,b$ and $a'\,b'$, so that $a'\,k = k\,c$, and $a'\,h = h\,c'$; draw $m\,c$ and $n\,c'$. We get in this way two cones $m\,a\,c$ and $n\,a\,c'$, which

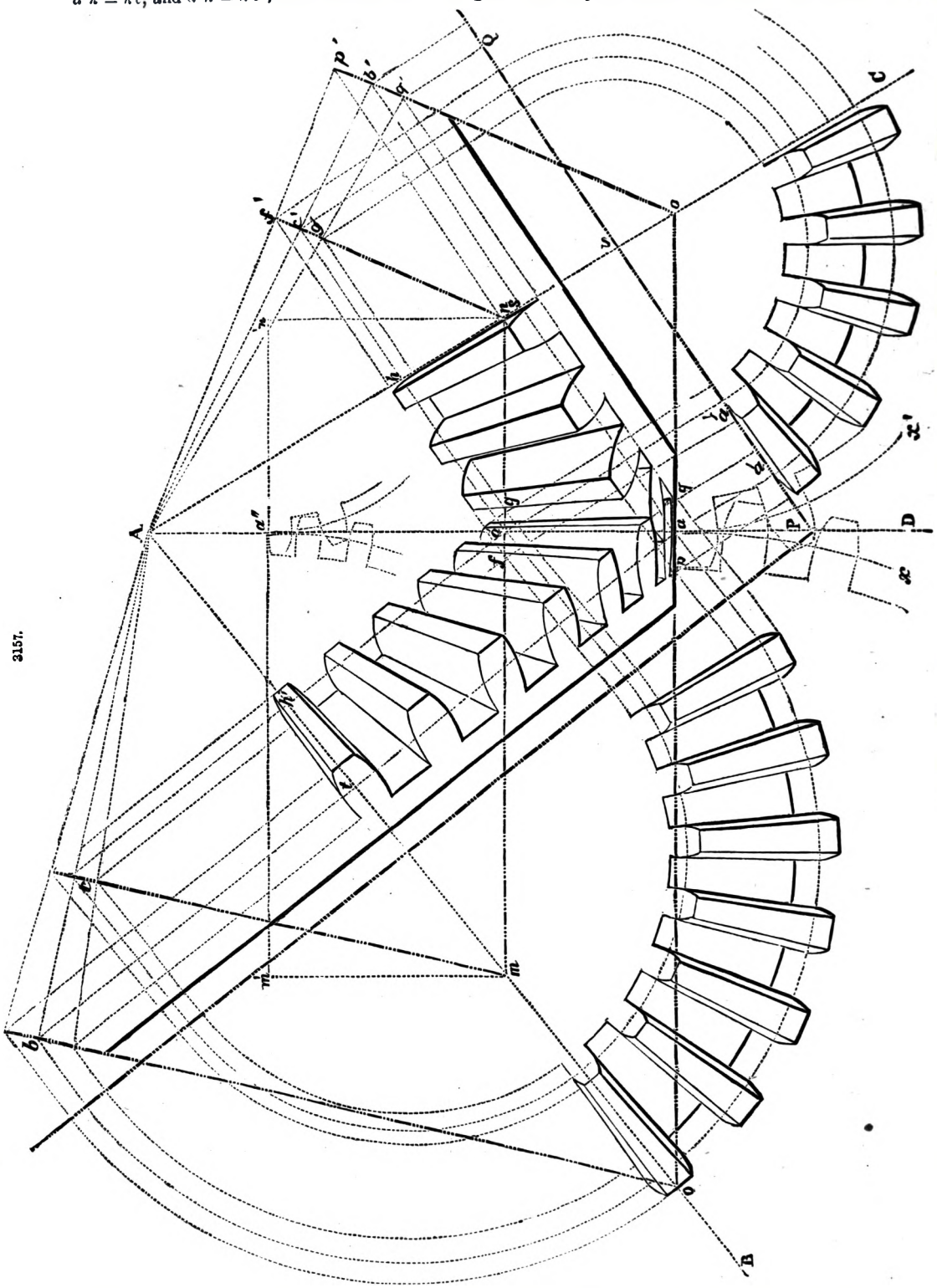

limit the upper portions of the pinions. The two lines which join A to the points b and b' evidently pass through the points c and c', and are the primitive generatrices or the several positions of the generatrix of contact.

Now, from the points o and o', with $o\,a$ and $o'\,a$ as radii, describe two arcs $a\,x$ and $a\,x'$, which may be considered as the pitch-circles of two spur-wheels, and upon which the gear is constructed, with the pitch previously determined. The teeth thus obtained represent the bases of the teeth of the pinions. If we consider the teeth obtained for the wheel A C, the circumferences which limit them at their extremities and at their roots, meet the line $o\,o'$ in the points p and q; through these points draw lines parallel to $a\,b'$ till they meet $o'\,b'$ in p and q'.

Now, with $m\,a$ and $n\,a'$ as radii transferred to $m'\,a''$ and $n'\,a''$, describe two arcs which will serve as a basis to a drawing analogous to the one given above. The teeth obtained form the upper extremities of those of the pinion. By bringing, through lines parallel to the generatrix of contact, the extremities and roots of the teeth upon $m\,n$, we get the points f and g, through which we draw lines parallel to $a'\,c$ and $a'\,c'$. We might determine these parallels equally well by giving the points p', q', to the summit A, which would give the points f', g'. The outline of the pinion is thus complete. What we have said is sufficient for practice, the rest belongs to descriptive geometry; we will, however, point out in summary manner what remains to be done to complete the plan.

Take a plane P Q perpendicular to the axis A C; mark upon this plane the different radii which have one of their extremities upon the axis and the other in the points p, a, q, and f, a', g; from the point v, with these radii, describe circles which will represent the plane of the pinion, projected at first upon the plane P Q. Upon the circumferences $v\,a_1$ and $v\,a'$, considered as pitch-circles, trace the teeth in the manner shown for spur-gear, that is, recommence the operations indicated by the dotted lines; then join the extremities of the teeth and project each of them upon the vertical plane. All the operations indicated for the wheel A C must be repeated for the other.

After having determined the generatrix of contact and the primitive radii of the wheels, it almost always happens that the pitch, determined in accordance with the force F, does not exactly divide the circumferences described with these radii. In this case the number of the teeth must be lessened, and consequently the pitch increased, until the division can be exactly made. No inconvenience can result from modifying in this direction the dimensions of the teeth.

We have selected as our example the case of two shafts forming an acute angle: the method of drawing is the same in all cases; but the most general case is that of two shafts placed at right angles to each other.

Endless Screw and Pinion.—When it is required to communicate the continuous circular motion of a shaft to another not situate in the same plane, the endless screw and pinion may be employed, if the given axes are at right angles and near each other.

The discussion of the principles upon which the construction of this gear rests would lead us into a somewhat complicated theory, which we will pass by for the sake of considering the drawing from a practical point of view. The data are reduced to the work and, consequently, to the force F to be transmitted.

3158.

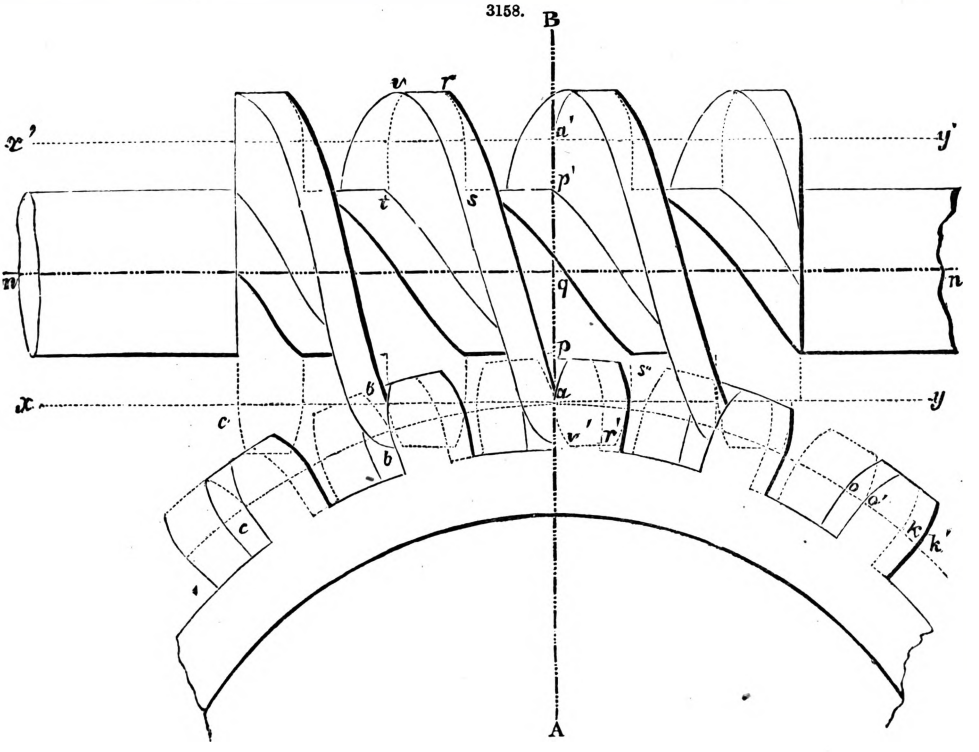

It is generally required to obtain one revolution of the pinion to a determinate number of revolutions of the screw. In this case, the number of teeth on the pinion is equal to the number of revolutions of the screw. But the distance of the teeth is calculated for the force to be trans-

mitted and remains invariable; therefore it is necessary to make the radius of the pinion depend upon the number of teeth: this cannot be, however, unless the distance of the axes be unlimited. It must be remarked that in almost all cases, the screw drives the pinion, the object being an increase of force at the cost of speed.

Knowing the maximum work to be transmitted, we may determine the pitch of the pinion, which is also that of the endless screw. The radius of the solid portion of the screw may be taken as a function of the pitch, since it is also dependent on the force. It is usually obtained by multiplying the pitch by 5, and dividing the result by 2. To execute the trace we must take A a, Fig. 3158, equal to the primitive radius of the pinion; draw through the point a, a perpendicular $x\,y$, which will be the pitch-line of the screw. From the point a, take upon the radius of the pinion produced, a length $a\,q$ equal to $\frac{12}{10}$ the radius of the solid or central portion of the screw, so that $a\,p$ may be equal to $\frac{2}{10}$ of this radius. By taking $q\,a' = q\,a$, and drawing $x'\,y'$ parallel to the axis $m\,n$ and to $x\,y$, we obtain the other pitch-line of the screw.

Now mark upon the pitch-circle of the pinion the lengths $a\,b$, $b\,c$ . . . , equal to the pitch; mark these same divisions upon $x\,y$ in $a\,b'$, $b'\,c'$ . . . , and construct the teeth of a rack, by taking as their faces the cycloid generated by a circle of a diameter A a, rolling upon $x\,y$. Trace upon $x'\,y'$ teeth symmetrical to the preceding with respect to $m\,n$. The helicoidal portions which unite the profiles $r\,s$ and $v\,t$, for example, to $r'\,s'$ and $p\,v'$, determine the thread and its inclination with respect to the axis of the screw.

The teeth of the pinion must have upon the disc which carries them the same inclination as the thread of the screw; the profile of them will therefore need to be traced upon each face of the wheel. Thus $o\,k$ represents the profile of a tooth upon one face, and $o'\,k'$ the same profile upon the other; $o\,o'$ is therefore the inclination upon the breadth of the wheel. As to the form of this profile it has not been exactly determined, but if the teeth are large, they must be cut to receive as nearly as possible the impress of the thread of the screw. Besides this, the extremities of the teeth and the bottom of the spaces, instead of being straight, that is form of generatrices situate in planes parallel to the axis, will present circular gorges, the radii of which are a little greater than $p\,q$ and $a\,q$.

It often happens that the endless screw has several threads; the distances which separate them are, in this case, equal fractions of their common pitch. The length of the screw may be limited to the three or four threads which act simultaneously. If we trace upon a cylinder of a considerable diameter, a series of threads of a very wide pitch, and then reduce each of them to a small portion of a spiral by means of two planes perpendicular to the axis and near together, we obtain what is called a helicoidal gear.

Construction of Cams for Stamps and Hammers.—The conversion of the continuous rotatory motion of a shaft into a reciprocating rotatory or rectilineal motion is frequently made in mills, and especially in iron-works, to obtain the ascensional motion of the stamps and hammers.

Suppose a rod A, Fig. 3159, furnished with a stamp, to be guided in such a way that it can move only in a vertical direction; such a rod may be raised by teeth or cams turning about an axis o and acting against a projecting part C. The stamp falls by its own weight, to be raised again by another cam.

When a system of this kind is established it is necessary to consider—1. The number m of cams to be employed. 2. The angular velocity of the shaft, or the number n of revolutions it is to make a minute. 3. The height to which the stamp is to be raised. 4. The radius of the pitch-circle to be developed to obtain the profile of the cams.

The course or stroke of the stamp is generally determined beforehand, and upon it alone depends the velocity of impact. The number of cams and the number of revolutions are mutually dependent, and their product $m\,n$ must be equal to the number of strokes a minute. We must in all cases take one of the factors and deduce the value of the other.

If we denote by T the time of one revolution, the time which elapses between the beginning of two consecutive strokes will be expressed by $\frac{T}{m}$.

The number of strokes a minute being equal to $m\,n$, we have $\frac{T}{m} = \frac{60''}{m\,n}$.

As there are always some passive resistances opposed to the descent of the stamp, $\frac{T}{m}$ must be increased in value by $\frac{1}{6}$ or $\frac{1}{7}$ to prevent the stamp from falling upon the cam which is to raise it. This result may be arrived at by increasing the radius of the pitch-circle upon which we operate for the construction of cams.

Thus the time of one ascent is given by $\frac{6}{7}\frac{T}{m}$. The formula of the time occupied in the descent is $t^2 = \frac{2c}{g}$, or $t^2 = \frac{2h}{g}$, from which we deduce $t = \sqrt{\frac{2h}{9{\cdot}81}}$.

The time t' during which the cam will act upon the stamp is therefore expressed by

$$t' = \frac{6}{7}\frac{T}{m} - \sqrt{\frac{2h}{9{\cdot}81}}.$$

The radius of the circumference to be developed will now be calculated by the formula

$$= \frac{60\,h}{t' \times 6{\cdot}28\,n}.$$

This radius may never be less than the value given by the formula, but no inconvenience can result from making it greater; this indeed, is nearly always done.

3159.

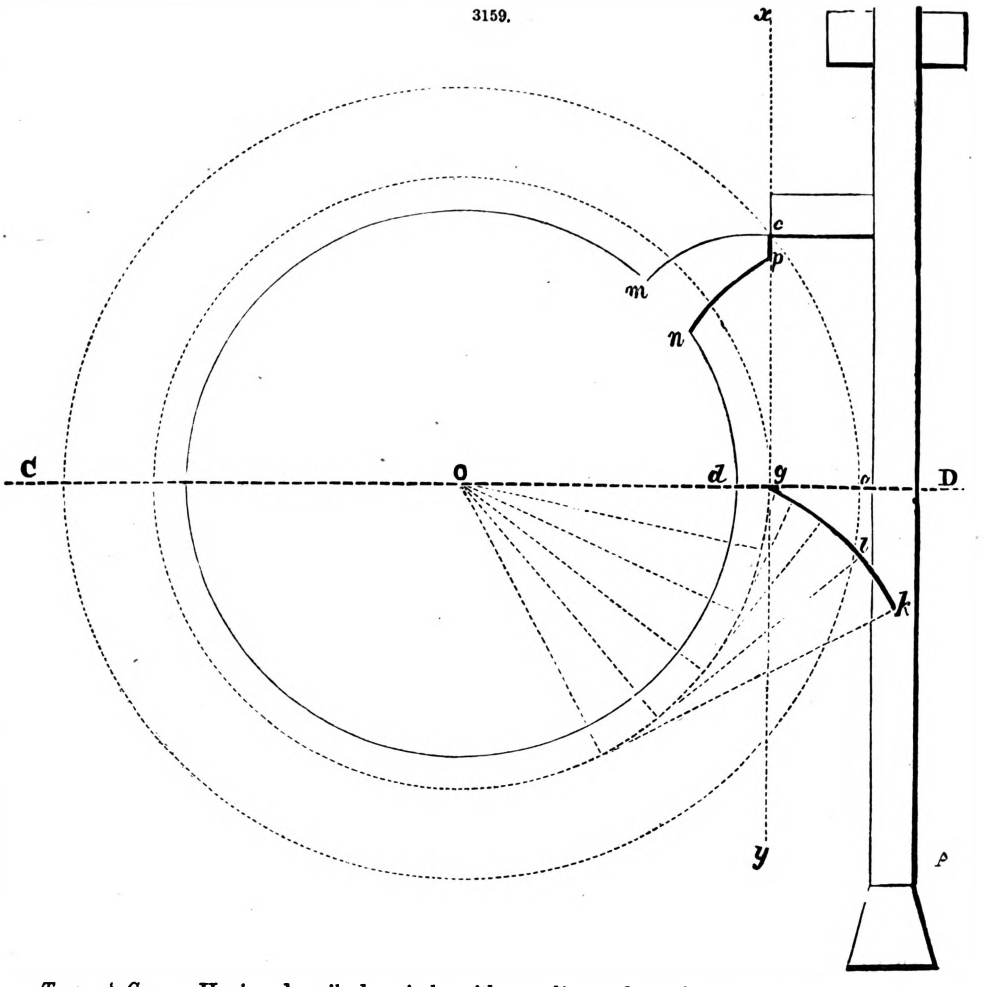

Trace of Cams.—Having described a circle with a radius r, draw the vertical tangent $x\,y$ upon which the point of application of the force transmitted will constantly be. Take $g\,c = h$, and draw the highest position of the projecting piece c. Determine a portion $g\,k$ of the involute of the circle $o\,g$, and from the point o, with the radius $o\,c$, describe a circle, which will limit at the point l the length of the cam. The other face of the cam is generally a nearly straight line; it is traced so that the form obtained may be nearly that of a solid of equal resistance, the greatest thickness $m\,n$ of which is calculated according to the maximum force to be developed, and the strength of the materials.

Theoretically, the cam should possess no thickness at its extremity, but in practice it has a thickness, which, instead of being marked by the circumference passing by the point c, is marked by a portion $c\,p$ of the line $x\,y$. This allows the instantaneous escape of the stud c.

Epicycloidal Cams for converting a Continuous into a Reciprocating Rotatory Motion.—The construction of cams for raising mill-hammers differs from the preceding in using the epicycloid.

Let $o\,n$, Fig. 3160, be the whole length of the hammer; from the point o, about which the hammer revolves, describe a circle with the radius $o\,n$. Take as the radius of the pitch-circle of the cams a sufficient length to prevent the hammer from falling upon the cam which is to raise it. What we have said above in reference to this subject is equally applicable here.

To find the form to be given to the profile of the cams, describe a circle with the diameter $o\,o$, and determine a portion $a\,m$ of the epicycloid generated by the point a while this circle is rolling upon the circle $o'\,a$.

To find the limit of the cams, take from the point a, upon the circle with a radius $o\,a$, the arc $a\,n$, representing the space traversed by the end of the hammer in its ascent, and describe the circle with a radius $o'\,n$. The two profiles of the cam, as in the preceding case, need not be symmetrical, but generally they are made similar. The thickness $p\,g$ is determined in the manner described above for stamps. It may be remarked, however, that the resistance to be overcome by the cams is not in this case merely the whole weight of the hammer, and that the length of the arms of the lever turning about the point o must be taken into account. Neglecting the weight of

the beam $o\,n$, and denoting the weight of the hammer by W, and the force borne by the cam by F, we have $F = \frac{O\,K \times W}{o\,n}$.

3160.

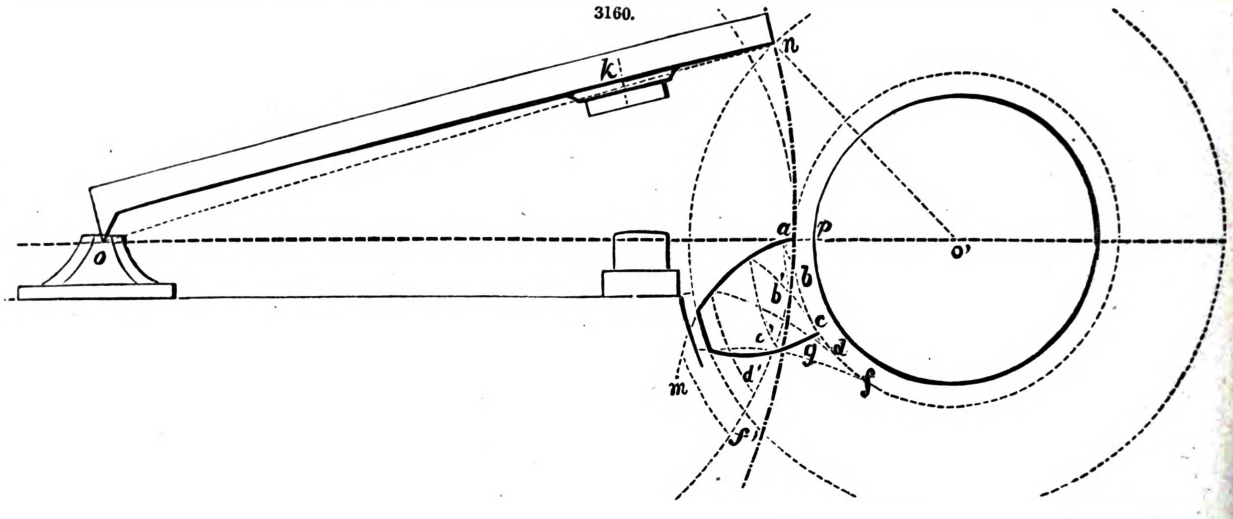

Suppose, as it is always well to suppose, that the load is constantly borne by the end of the cam, and denote by a, b, c, the three dimensions of the latter, that is, thickness in the direction of the force, breadth taken perpendicularly to the direction of this force, and the length of the cam. Neglecting the weight of the tooth, the section at the base will be given by the formula $a\,b^2 = \frac{F\,c}{1250000}$, if the cams are of cast iron. If they are of wrought iron, the divisor of the product $F\,c$ is 1000000; and if they are of wood, this divisor will be reduced to 100000.

Construction of the Heart-shaped Cam.—This cam, whose form is sufficiently indicated by its name, is used to convert the continuous rotatory motion of a shaft into a reciprocating rectilinear motion of a rod, and so on. The only datum necessary to the construction is the length of the stroke required.

3161

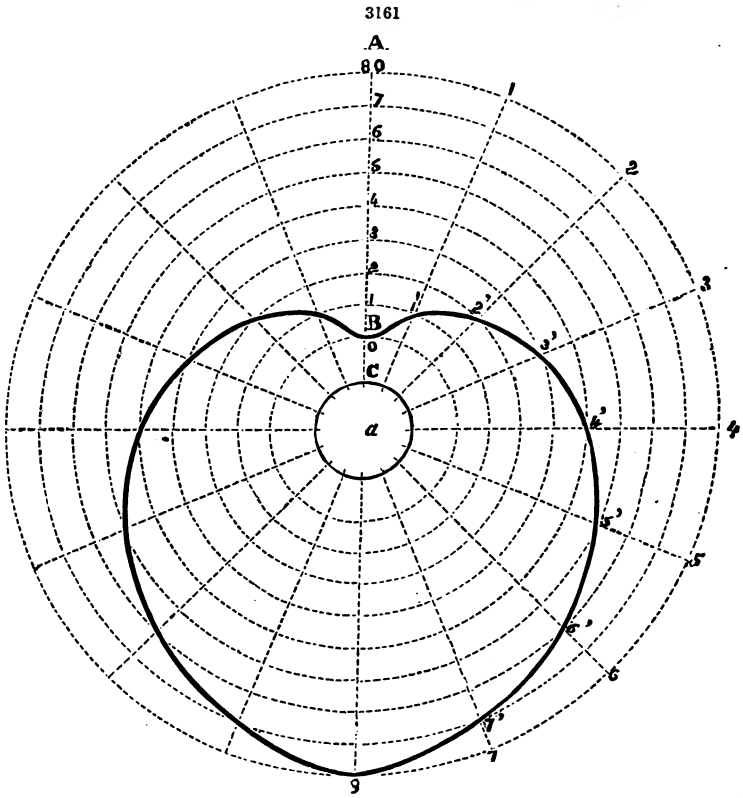

To construct the heart-shaped eccentric, take a length A B, Fig. 3161, equal to the stroke; produce it first to C, B C being equal to the least thickness of metal to be retained about the shaft; then to a, C a being equal to the radius of the shaft. Describe the circles a C, a B, a A; divide each half of the circle A a into eight equal parts, for example; the greater the number, the more exact will be the construction. Draw the radii a 1, a 2, a 3 . . . ; divide in like manner A B into eight equal parts, and from the centre a describe the circles passing through the points of division; the point in which each of these circles meets the radius of the same number is a point in the curve.

If the cam is to work against a roller, which is generally the case, the angle B must be rounded a little to give it the form of the roller; and a length equal to the radius of this roller added to the radius A *a*, which length is placed between the stroke A B and the thickness B C.

The heart-shaped cam possesses several valuable properties.

1. It intercepts upon all the lines passing through the centre *a* equal length; this enables it to turn in a frame.

2. The spaces traversed in a straight line by the frame or rod are exactly proportional to the angular velocity of the cam; whence it follows that if the rotatory motion of the shaft is uniform, the rectilinear motion produced is uniform also.

Trace of a Cam converting a Continuous Rotatory Motion into a Uniformly Periodical Motion.—Suppose the rectilinear motion to be produced to be slow at the beginning, accelerated during a certain time, and retarded towards the end of the stroke, so as to end with the velocity with which it began.

3162.

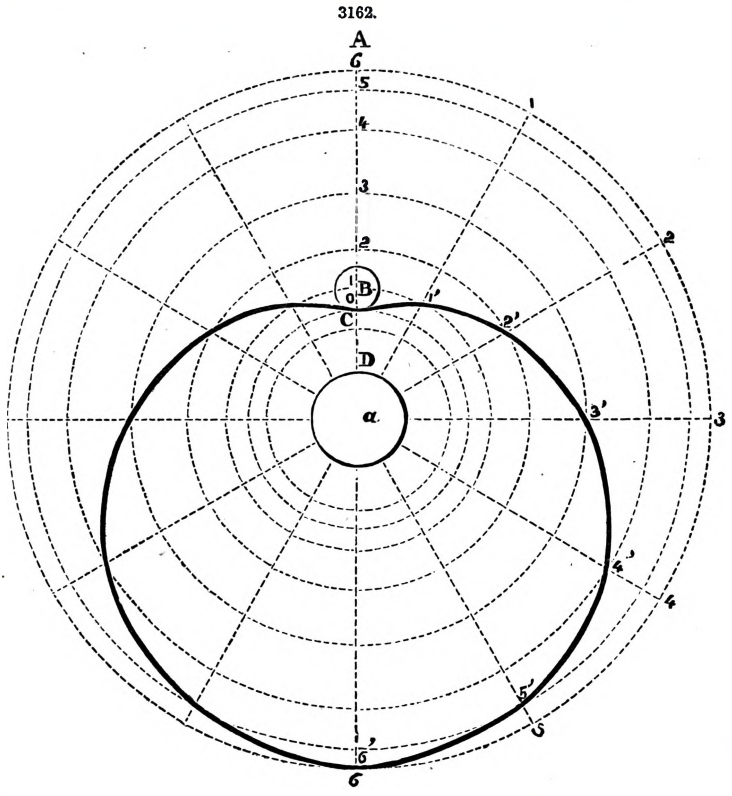

Having taken, as before, A B equal to the stroke, Fig. 3162, we add B C equal to the radius of the roller; the point C is here the beginning of the curve. Take C D as the least thickness of the metal and D *a* equal to the radius of the shaft. From the point C divide C A into parts proportional to the acceleration or the retardment of the velocity at the given points of the stroke, and describe from the centre *a* the circles passing through the points 1, 2, 3 . . . Divide each half of the circle *a* A into six equal parts, and draw the radii to the points of division; their intersection with the circumferences passing through the corresponding points of the stroke A C gives the points of the curve sought.

This eccentric cannot, like the last, work in a frame.

Fig. 3163. A method of engaging, disengaging, and reversing the upright shaft at the left. The belt is shown on the middle one of the three pulleys on the lower shafts *a*, *b*, which pulley is loose, and consequently no movement is communicated to the said shafts. When the belt is traversed on the left-hand pulley, which is fast on the hollow shaft *b*, carrying the bevel-gear B, motion is communicated in one direction to the upright shaft; and on its being traversed on to the right-hand pulley, motion is transmitted through the gear A, fast on the shaft *a*, which runs inside of *b*, and the direction of the upright shaft is reversed.

3163.

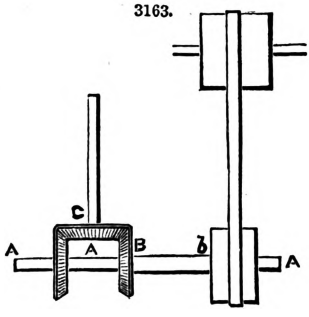

3164.

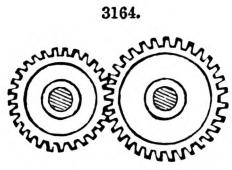

3165

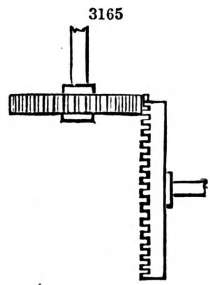

Fig. 3164. Spur-gears.

Fig. 3165. The wheel to the right is termed a *crown-wheel;* that gearing with it is a spur-gear. These wheels are not much used, and are only available for light work, as the teeth of the crown-wheel must necessarily be thin.

3166.

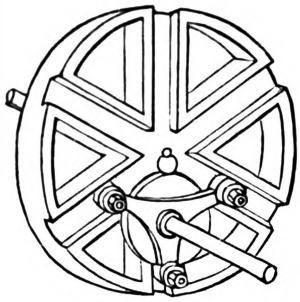

3167.

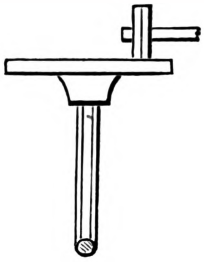

3168.

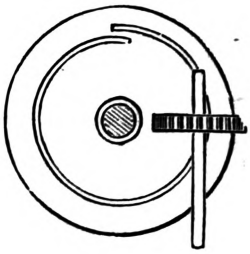

3169.

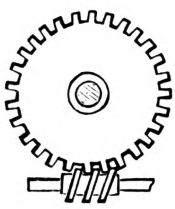

3170.

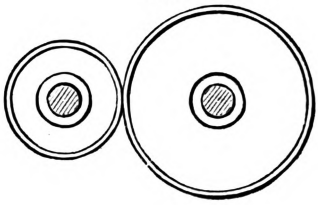

3171.

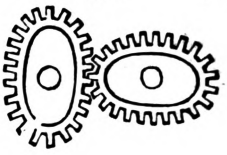

3172.

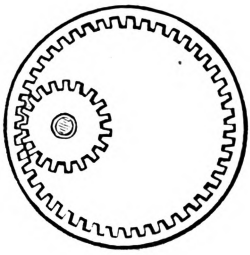

3173.

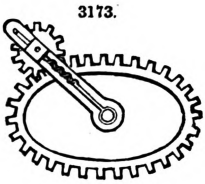

3174.

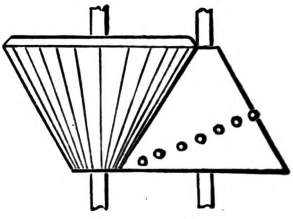

3175.

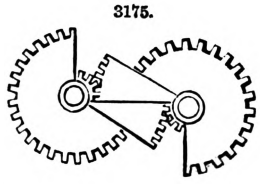

3176.

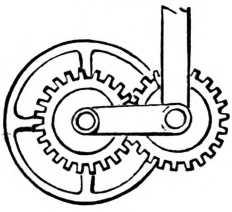

3177. 3178

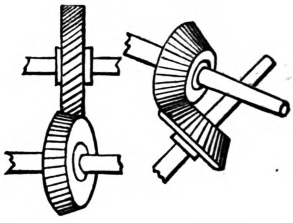

3179.

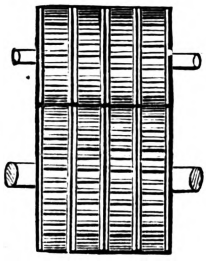

3180

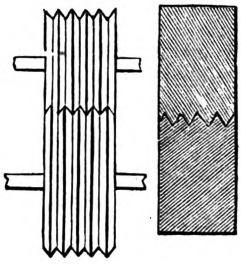

3181.

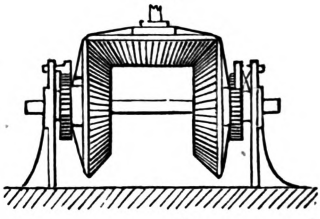

3182.

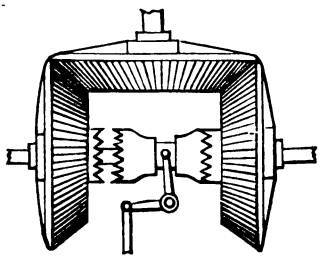

3183.

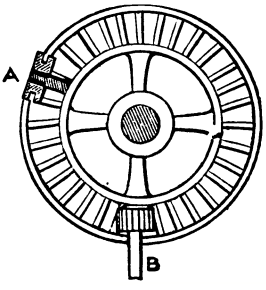

3184.

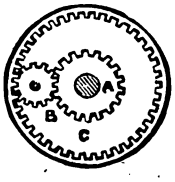

Fig. 3166. *Multiple-gearing*—a recent invention. The smaller triangular wheel drives the larger one by the movement of its attached friction-rollers in the radial grooves.

Fig. 3167. These are sometimes called brush-wheels. The relative speeds can be varied by changing the distance of the upper wheel from the centre of the lower one. The one drives the other by the friction or adhesion, and this may be increased by facing the lower one with india-rubber.

Fig. 3168. Transmission of rotary motion from one shaft at right angles to another The spiral thread of the disc-wheel drives the spur-gear, moving it the distance of one tooth at every revolution.

Fig. 3169. Worm or endless screw and a worm-wheel. This effects the same result as Fig. 3168: and as it is more easily constructed, it is oftener used.

Fig. 3170. Friction-wheels. The surfaces of these wheels are made rough, so as to *bite* as much as possible; one is sometimes faced with leather, or, better, with vulcanized india-rubber.

Fig. 3171. Elliptical spur-gears. These are used where a rotary motion of varying speed is required, and the variation of speed is determined by the relation between the lengths of the major and minor axes of the ellipses.

Fig. 3172. An internally-toothed spur-gear and pinion. With ordinary spur-gears (such as represented in Fig. 3164) the direction of rotation is opposite; but with the internally-toothed gear, the two rotate in the same direction; and with the same strength of tooth the gears are capable of transmitting greater force, because more teeth are engaged.

Fig. 3173. Variable rotary motion produced by uniform rotary motion. The small spur-pinion works in a slot cut in the bar, which turns loosely upon the shaft of the elliptical gear. The bearing of the pinion-shaft has applied to it a spring, which keeps it engaged; the slot in the bar is to allow for the variation of length of radius of the elliptical gear.

Fig. 3174. Uniform into variable rotary motion. The bevel-wheel or pinion to the left has teeth cut through the whole width of its face. Its teeth work with a spirally-arranged series of studs on a conical wheel.

Fig. 3175. A means of converting rotary motion, by which the speed is made uniform during a part, and varied during another part, of the revolution.

Fig. 3176. Sun-and-planet motion. The spur-gear to the right, called the planet-gear, is tied to the centre of the other, or sun-gear, by an arm which preserves a constant distance between their centres. This was used as a substitute for the crank in a steam-engine by James Watt, after the use of the crank had been patented by another party. Each revolution of the planet-gear, which is rigidly attached to the connecting rod, gives two to the sun-gear, which is keyed to the fly-wheel shaft.

Figs. 3177, 3178. Different kinds of gears for transmitting rotary motion from one shaft to another arranged obliquely thereto.

Fig. 3179. A kind of gearing used to transmit great force and give a continuous bearing to the teeth. Each wheel is composed of two, three, or more distinct spur-gears. The teeth, instead of being in line, are arranged in steps to give a continuous bearing. This system is sometimes used for driving screw-propellers, and sometimes, with a rack of similar character, to drive the beds of large iron-planing machines.

Fig. 3180. Frictional grooved gearing—a comparatively recent invention. The diagram to the right is an enlarged section, which can be more easily understood.

Fig. 3181. Alternate circular motion of the horizontal shaft produces a continuous rotary motion of the vertical shaft, by means of the ratchet-wheels secured to the bevel-gears, the ratchet-teeth of the two wheels being set opposite ways, and the pawls acting in opposite directions. The bevel-gears and ratchet-wheels are loose on the shaft, and the pawls attached to arms firmly secured on the shaft.

Fig. 3182. The vertical shaft is made to drive the horizontal one in either direction, as may be desired, by means of the double-clutch and bevel-gears. The gears on the horizontal shaft are loose, and are driven in opposite directions by the third gear; the double-clutch slides upon a key or feather fixed on the horizontal shaft, which is made to rotate either to the right or left, according to the side on which it is engaged.

Fig. 3183. Mangle or star-wheel, for producing an alternating rotary motion.

Fig. 3184. Different velocity given to two gears, A and C, on the same shaft, by the pinion D.

Fig. 3185. The small pulley at the top being the driver, the large, internally-toothed gear and the concentric gear within will be driven in opposite directions by the bands, and at the same time will impart motion to the intermediate pinion at the bottom, both around its own centre and also around the common centre of the two concentric gears.

Fig. 3186. Jumping or intermittent rotary motion, used for meters and revolution-counters. The drop and attached pawl, carried by a spring at the left, are lifted by pins in the disc at the right. Pins escape first from pawl, which drops into next space of the star-wheel. When pin escapes from drop, spring throws down suddenly the drop, the pin on which strikes the pawl, which, by its action on star-wheel, rapidly gives it a portion of a revolution. This is repeated as each pin passes.

Fig. 3187. Another arrangement of jumping motion. Motion is communicated to worm-gear B by worm or endless screw at the bottom, which is fixed upon the driving shaft. Upon the shaft carrying the worm-gear works another hollow shaft, on which is fixed cam A. A short piece of this hollow shaft is half cut away. A pin fixed in worm-gear shaft turns hollow shaft and cam, the spring which presses on cam holding hollow shaft back against the pin until it arrives a little farther than shown in the figure, when, the direction of the pressure being changed by the peculiar shape of cam, the latter falls down suddenly, independently of worm-wheel, and remains at rest till the pin overtakes it, when the same action is repeated.

Fig. 3188. The left-hand disc or wheel C is the driving wheel, upon which is fixed the tappet A.

3185.

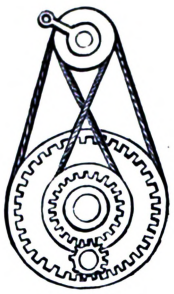

3186.

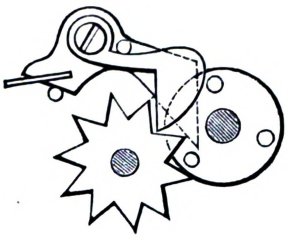

3187.

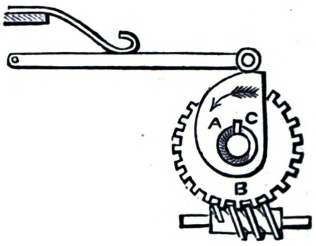

3188.

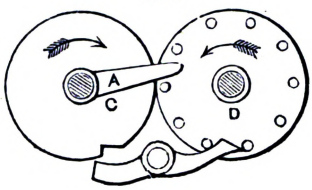

3189.

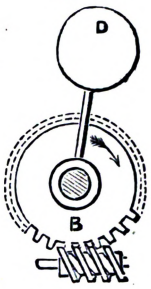

3190.

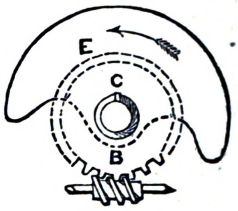

3191.

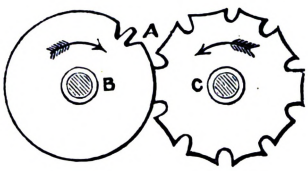

3192.

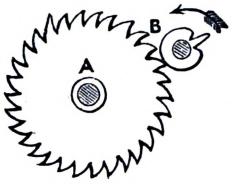

3193

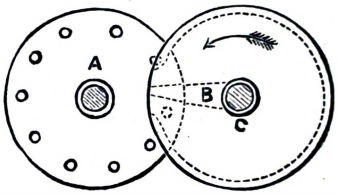

3194.

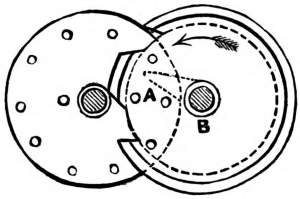

3195.

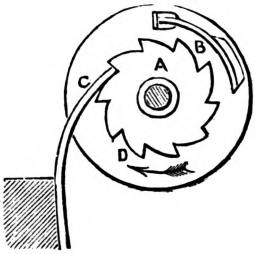

3196.

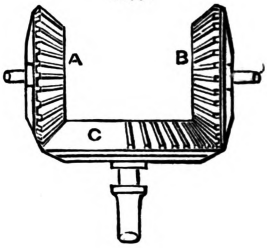

3197.

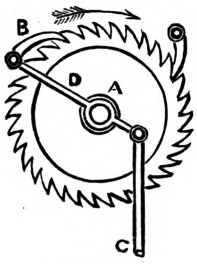

3198.

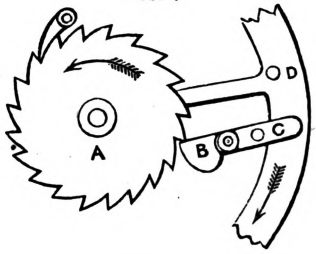

3199.

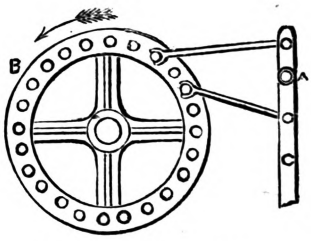

3200

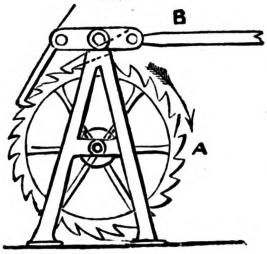

3201.

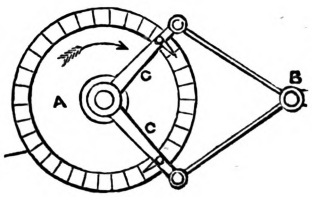

3202.

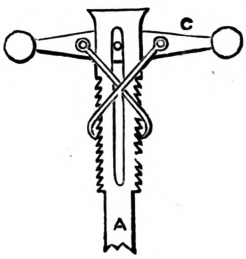

3203.

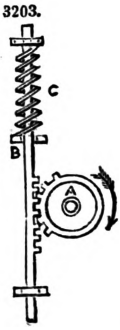

The other disc or wheel D has a series of equidistant studs projecting from its face. Every rotation of the tappet acting upon one of the studs in the wheel D causes the latter wheel to move the distance of one stud. In order that this may not be exceeded, a lever-like stop is arranged on a fixed centre. This stop operates in a notch cut in wheel C, and at the same instant tappet A strikes a stud, said notch faces the lever. As wheel D rotates the end between studs is thrust out, and the other extremity enters the notch; but immediately on the tappet leaving stud, the lever is again forced up in front of next stud, and is there held by periphery of C pressing on its other end.

Fig. 3189. A modification of Fig. 3187; a weight D, attached to an arm secured in the shaft of the worm-gear, being used instead of spring and cam.

Fig. 3190. Another modification of Fig. 3187; a weight or tumbler E, secured on the hollow shaft, being used instead of spring and cam, and operating in combination with pin C, in the shaft of worm-gear.

Fig. 3191. The single tooth A of the driving wheel B acts in the notches of the wheel C, and turns the latter the distance of one notch in every revolution of C. No stop is necessary in this movement, as the driving wheel B serves as a lock by fitting into the hollows cut in the circumference of the wheel C between its notches.

Fig. 3192. B, a small wheel with one tooth, is the driver, and the circumference entering between the teeth of the wheel A, serves as a lock or stop while the tooth of the small wheel is out of operation.

Fig. 3193. The driving wheel C has a rim, shown in dotted outline, the exterior of which serves as a bearing and stop for the studs on the other wheel A, when the tappet B is out of contact with the studs. An opening in this rim serves to allow one stud to pass in and another to pass out. The tappet is opposite the middle of this opening.

Fig. 3194. The inner circumference (shown by dotted lines) of the rim of the driving wheel B serves as a lock against which two of the studs in the wheel C rest until the tappet A, striking one of the studs, the next one below passes out from the guard-rim through the lower notch, and another stud enters the rim through the upper notch.

Fig. 3195. To the driving wheel D is secured a bent spring B; another spring C is attached to a fixed support. As the wheel D revolves, the spring B passes under the strong spring C, which presses it into a tooth of the ratchet-wheel A, which is thus made to rotate. The catch-spring B, being released on its escape from the strong spring C, allows the wheel A to remain at rest till D has made another revolution. The spring C serves as a stop.

Fig. 3196. A uniform intermittent rotary motion in opposite directions is given to the bevel-gears A and B by means of the mutilated bevel-gear C.

Fig. 3197. Reciprocating rectilinear motion of the rod C transmits an intermittent circular motion to the wheel A, by means of the pawl B at the end of the vibrating bar D.

Fig. 3198 is another contrivance for registering or counting revolutions. A tappet B, supported on the fixed pivot C, is struck at every revolution of the large wheel (partly represented) by a stud D attached to the said wheel. This causes the end of the tappet next the ratchet-wheel A to be lifted, and to turn the wheel the distance of one tooth. The tappet returns by its own weight to its original position after the stud D has passed, the end being jointed to permit it to pass the teeth of the ratchet-wheel.

Fig. 3199. The vibration of the lever C on the centre or fulcrum A produces a rotary movement of the wheel B, by means of the two pawls, which act alternately. This is almost a continuous movement.

Fig. 3200. A modification of Fig. 3199.

Fig. 3201. Reciprocating rectilinear motion of the rod B produces a nearly continuous rotary movement of the ratchet-faced wheel A, by the pawls attached to the extremities of the vibrating radial arms C C.

Fig. 3202. Rectilinear motion is imparted to the slotted bar A by the vibration of the lever C through the agency of the two hooked pawls, which drop alternately into the teeth of the slotted rack-bar A.

Fig. 3203. Alternate rectilinear motion is given to the rack-rod B by the continuous revolution of the mutilated spur-gear A, the spiral spring C forcing the rod back to its original position on the teeth of the gear A quitting the rack.

Fig. 3204. On motion being given to the two treadles D a nearly continuous motion is imparted, through the vibrating arms B and their attached pawls, to the ratchet-wheel A. A chain or strap attached to each treadle passes over the pulley C, and as one treadle is depressed the other is raised.

Fig. 3205. A nearly continuous rotary motion is given to the wheel D by two ratchet-toothed arcs C, one operating on each side of the ratchet-wheel D. These arcs (only one of which is shown) are fast on the same rock-shaft B, and have their teeth set opposite ways. The rock-shaft is worked by giving a reciprocating rectilinear motion to the rod A. The arcs should have springs applied to them, so that each may be capable of rising to allow its teeth to slide over those of the wheel in moving one way.

Fig. 3206. The double rack-frame B is suspended from the rod A. Continuous rotary motion is given to the cam D. When the shaft of the cam is midway between the two racks, the cam acts upon neither of them; but by raising or lowering the rod A either the lower or upper rack is brought within range of the cam, and the rack-frame moved to the left or right. This movement has been used in connection with the governor of an engine, the rod A being connected with the governor, and the rack-frame with the throttle or regulating valve.

Fig. 3207. Uniform circular motion into reciprocating rectilinear motion, by means of mutilated pinion, which drives alternately the top and bottom rack.

Fig. 3208. Circular motion into alternate rectilinear motion. Motion is transmitted through pulley at the left upon the worm-shaft. Worm slides upon shaft, but is made to turn with it by

3204.

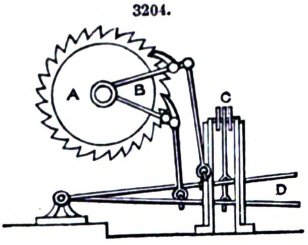

3205.

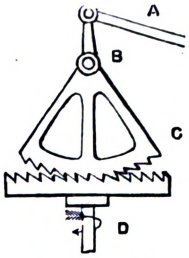

3206.

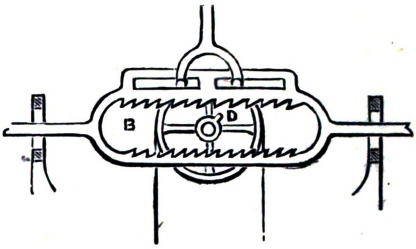

3207.

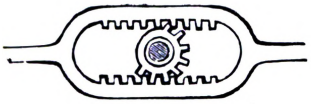

3208.

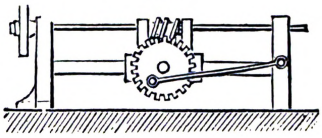

3209.

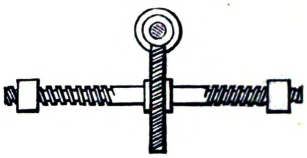

3210.

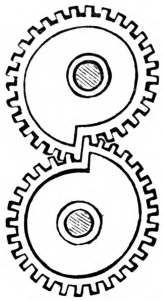

3211.

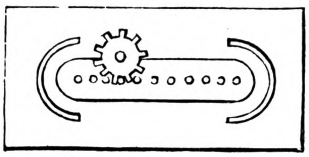

3212.

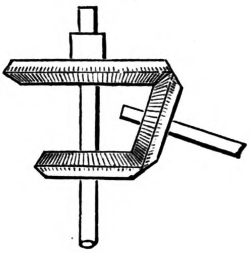

3213.

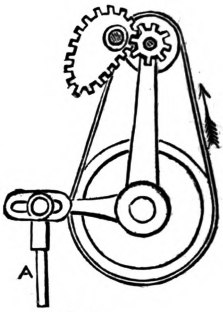

3214.

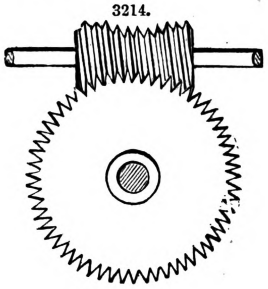

3215.

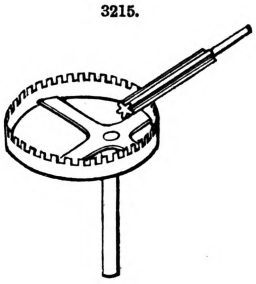

3216.

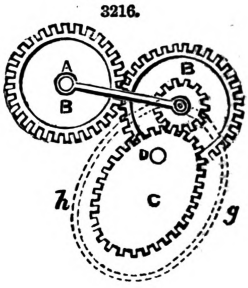

3217.

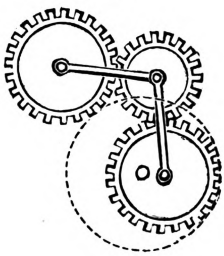

3218.

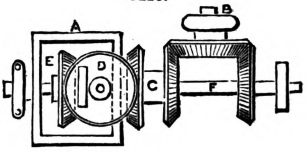

3219.

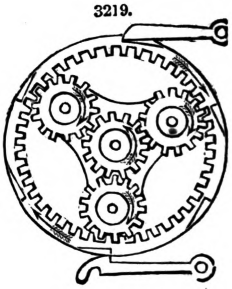

3220.

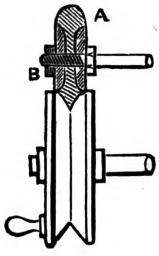

3221

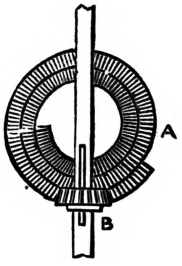

3222.

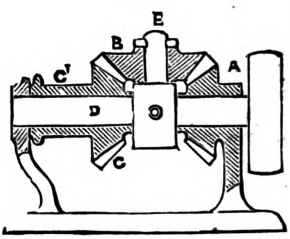

means of a groove cut in shaft, and a key in hub of worm. Worm is carried by a small traversing frame, which slides upon a horizontal bar of the fixed frame, and the traversing frame also carries the toothed wheel into which the worm gears. One end of a connecting rod is attached to fixed frame at the right and the other end to a wrist secured in toothed wheel. On turning worm-shaft rotary motion is transmitted by worm to wheel, which, as it revolves, is forced by connecting rod to make an alternating traverse motion.

Fig. 3209. Continuous circular into continuous but much slower rectilinear motion. The worm on the upper shaft, acting on the toothed wheel on the screw-shaft, causes the right and left hand screw-threads to move the nuts upon them toward or from each other according to the direction of rotation.

Fig. 3210. Scroll-gears for obtaining a gradually-increasing speed.

Fig. 3211. What is called a *mangle-rack*. A continuous rotation of the pinion will give a reciprocating motion to the square frame. The pinion-shaft must be free to rise and fall, to pass round the guides at the ends of the rack. This motion may be modified as follows;—If the square frame be fixed, and the pinion be fixed upon a shaft made with a universal joint, the end of the shaft will describe a line, similar to that shown in the drawing, around the rack.

Fig. 3212. A mode of obtaining two different speeds on the same shaft from one driving wheel.

Fig. 3213. A continual rotation of the pinion (obtained through the irregular-shaped gear at the left) gives a variable vibrating movement to the horizontal arm, and a variable reciprocating movement to the rod A.

Fig. 3214. Worm or endless screw and worm-wheel. Used when steadiness or great power is required.

Fig. 3215. Variable circular motion by crown-wheel and pinion. The crown-wheel is placed eccentrically to the shaft, therefore the relative radius changes.

Fig. 3216. Irregular circular motion imparted to wheel A. C is an elliptical spur-gear rotating round centre D, and is the driver. B is a small pinion with teeth of the same pitch, gearing with C. The centre of this pinion is not fixed, but is carried by an arm or frame which vibrates on a centre A, so that as C revolves the frame rises and falls to enable pinion to remain in gear with it, notwithstanding the variation in its radius of contact. To keep the teeth of C and B in gear to a proper depth, and prevent them from riding over each other, wheel C has attached to it a plate which extends beyond it and is furnished with a groove *g h* of similar elliptical form, for the reception of a pin or small roller attached to the vibrating arm concentric with pinion B.

Fig. 3217. If for the eccentric wheel described in the last figure an ordinary spur-gear moving on an eccentric centre of motion be substituted, a simple link connecting the centre of the wheel with that of the pinion with which it gears will maintain proper pitching of teeth in a more simple manner than the groove.

Fig. 3218. This movement is designed to double the speed by gears of equal diameters and numbers of teeth—a result once generally supposed to be impossible. Six bevel-gears are employed. The gear on the shaft B is in gear with two others—one on the shaft F, and the other on the same hollow shaft with C, which turns loosely on F. The gear D is carried by the frame A, which, being fast on the shaft F, is made to rotate, and therefore takes round D with it. E is loose on the shaft F, and gears with D. Now, suppose the two gears on the hollow shaft C were removed and D prevented from turning on its axis, one revolution given to the gear on B would cause the frame A also to receive one revolution, and as this frame carries with it the gear D, gearing with E, one revolution would be imparted to E; but if the gears on the hollow shaft C were replaced D would receive also a revolution on its axis during the one revolution of B, and thus would produce two revolutions of E.

Fig. 3219. Wheel-work in the base of capstan. Thus provided, the capstan can be used as a simple or compound machine, single or triple purchase. The drumhead and barrel rotate independently; the former, being fixed on spindle, turns it round, and when locked to barrel turns it also, forming single purchase; but when unlocked wheel-work acts, and drumhead and barrel rotate in opposite directions, with velocities as three to one.

Fig. 3220. J. W. Howlett's adjustable frictional gearing. This is an improvement on that shown in Fig. 3180. The upper wheel A shown in section, is composed of a rubber disc with V-edge, clamped between two metal plates. By screwing up the nut B, which holds the parts together, the rubber disc is made to expand radially, and greater tractive power may be produced between the two wheels.

Fig. 3221. Scroll-gear and sliding pinion, to produce an increasing velocity of scroll-plate A, in one direction, and a decreasing velocity when the motion is reversed. Pinion B moves on a feather on the shaft.

Fig. 3222. Entwistle's gearing. Bevel-gear A is fixed. B, gearing with A, is fitted to rotate on stud E, secured to shaft D, and it also gears with bevel-gear C loose, on the shaft D. On rotary motion being given to shaft D, the gear E revolves around A, and also rotates upon its own axis, and so acts upon C in two ways, namely, by its rotation on its own axis and by its revolution around A. With three gears of equal size, the gear C makes two revolutions for every one of the shaft D. This velocity of revolution may, however, be varied by changing the relative sizes of the gears. C is represented with an attached drum C'. This gearing may be used for steering apparatus, driving screw-propellers, &c. By applying power to C action may be reversed, and a slow motion of D obtained.

GEODESY. Fr., *Géodésie;* Ger., *Geodäsie;* Ital., *Geodesia;* Span., *Geodesia.*

An extensive survey made over large portions of the surface of the earth, either for the purpose of ascertaining the exact position of the principal places of a country, or of determining the dimensions and figure of the earth, is usually designated a Trigonometrical survey. This branch of surveying is termed *Geodesy.*

For this purpose a country is first divided into a number of large triangles, whose sides are usually from 10 to 20 miles in length; but sometimes they extend to 50 or 60 miles, and even occasionally, as in Spain and the west of Scotland, to 100 miles in length. All the angles of the triangles are then carefully observed, and a line situated in a level tract of country, called a *base line*, is measured with extreme care. These triangles may be said to form a species of polyhedron, circumscribing a portion of the earth, and they are reduced to others on its surface at the level of the sea, by supposing perpendiculars to be drawn from each station to the surface. The latitudes and longitudes of the different stations are then determined; and also their heights, and the angles which the sides of the triangle make with the meridional line.

The great triangles, into which the country is divided in the first instance, are denominated *principal* triangles. They are afterwards, by a second series of operations, subdivided into smaller ones, called *secondary* triangles, and these again are broken up into others of still smaller dimensions, until at length a survey of the whole country is made of any degree of minuteness which may be thought necessary. The calculations are finally *verified* by measuring other base lines, and comparing them with their lengths determined by calculation.

In the choice of stations, in a trigonometrical survey, there are two points which ought principally to be attended to;—1st. The angles should have such a magnitude, that any small inevitable errors in the observations shall produce the least effect on the sides to be calculated. 2nd. The stations should all be distinctly visible from each other.

To determine the most advantageous conditions of a Triangle.—Let a, b, c, be the sides of a triangle, and A, B, C, the angles respectively opposite to them. The angles are all known from observation, and the side a is either measured or determined from previous calculation. The side b is then found from the equation

$$b \sin. A = a \sin. B. \qquad [a]$$

Suppose now that the side a is accurately known, but that the angles A and B have not been correctly measured. Let α, β, be the respective errors in A and B, and let x be the corresponding error in the side b. We have then $(b + x) \sin. (A + \alpha) = a \sin. (B + \beta)$.

Expanding this expression, and putting $\cos. \alpha = 1$, $\sin. \alpha = \alpha$, $\cos. \beta = 1$, $\sin. \beta = \beta$, since the errors α, β, are necessarily very small, we get

$$(b + x) (\sin. A + \alpha \cos. A) = a (\sin. B + \beta \cos. B).$$

Subtracting $[a]$ from this equation, and omitting the term $x\alpha \cos. A$, which is the second order, and extremely small compared with the other terms, we get

$$x \sin. A + b\alpha \cos. A = a\beta \cos. B = \frac{b \sin. A}{\sin. B} \beta \cos. B;$$

$$\therefore \quad x = b (\beta \cot. B - \alpha \cot. A). \qquad [1]$$

Hence, if we suppose the errors α and β to be equal, and to have the same sign, the error x will be 0 when A = B; that is, there will be no error in calculating the side b, although the angles A and B are not correctly observed. If the errors α and β are equal, but have different signs, this equation becomes $x = b\alpha (\cot. A + \cot. B)$.

Now,
$$\cot. A + \cot. B = \frac{\cos. A}{\sin. A} + \frac{\cos. B}{\sin. B} = \frac{(\sin. A + B)}{\sin. A \sin. B}.$$

Also,

$2 \sin. A \sin. B = \cos. (A - B) - \cos. (A + B) = \cos. (A - B) + \cos. C$, and $\sin. (A + B) = \sin. C$,

therefore
$$x = b\alpha \frac{2 \sin. C}{\cos. (A - B) + \cos. C}, \qquad [2]$$

an expression which is evidently the least possible when A = B.

Since the same reasoning is applicable to the third side c, it follows that the most advantageous conditions of a triangle are *that its sides should be as nearly equal as possible.* But, as it is frequently impossible to fulfil these conditions, surveyors are in general satisfied with rejecting all triangles which have an angle less than 30°.

If the angles are accurately known, but there is an error in the side a, it is evident that the errors in the sides b and c will be proportional to their lengths; for the angles being constant the triangles will be similar. Hence it is of the utmost importance to measure the base line correctly, for any error in this line, which is necessarily very short compared with the extent of the country to be surveyed, will be continued through the whole chain of triangles, and magnified in proportion to the length of the sides.

Description of Signals.—All the stations should be situated in the most elevated part of the country, so as to be seen from each other without difficulty. In many cases the theodolite has to be elevated to the top of some tower, church-steeple, or other building, and flagstaffs placed over the instruments. These can be more easily distinguished when their figures are seen in the sky, than when they are projected on the earth or on trees. For more distant stations, *Bengal* or *white lights* were at first used by General Roy. Afterwards the reflection of the sun from a plane mirror, as recommended by Gauss, was employed by Colonel Colby and Captain Kater, in verifying that part of General Roy's triangulation which connected the meridians of Greenwich and Paris. *Drummond lights* were used as night signals at some of the stations in Ireland and the west of Scotland; but the practice of observing by night has lately been abandoned, in consequence of the unsteadiness of the light and the quantity of vapour in the atmosphere. Signals in the English survey were sometimes formed by building a temporary shed in the form of the frustum of a cone, over the point which marks the centre of the station. When the distances are not very great a

plate of metal is sometimes used, with a narrow vertical slit cut in it; in which case the line of light passing through it may be seen very distinctly.

In elevating a signal for the purposes of observation, it is necessary that it should be sufficiently high to be easily distinguished from the surrounding objects. From the experience of the French surveyors, they state that the angle of elevation should be at least 31″; and as tan. 31″ = 0·00015, it follows that the height of the signal must be equal to 0·00015 × distance. In practice, therefore, the French usually made the height of the signal equal to a seven thousandth part of the distance from whence it was to be observed, and the base of the signal equal to half its height. Hence if the distance be 20 miles, a distance not unusual in the trigonometrical survey, the signal should be at least 15 ft. in height.

Of all the operations in which the surveyor is engaged, that which appears the most simple, but which is by far the most difficult, is the measurement of a base line. Since this line is seldom more than six or seven miles in length, and any error in its measurement is multiplied in the other parts of the survey in proportion to their linear dimensions, it is obvious that, in a tract of country 300 miles long, the error in this length would be fifty times the error in the base line. Every precaution, therefore, has been taken which art or ingenuity could devise to ensure the greatest accuracy in this most important operation.

The first thing to be done is to select a level piece of ground, from five to seven or eight miles in length, which shall be free from local obstructions, and commodiously situated with respect to surrounding objects. It is also desirable that it should not be far distant from an observatory, so that the whole chain of triangles may be connected with a fixed station, where astronomical observations are made with the utmost care and precision.

After the ground has been selected, a line is drawn in the same vertical plane, by means of a transit telescope, and marked out by pickets, the tops of which are brought exactly into the same level. The tract which is to be measured is then cleared of all obstructions, and made tolerably smooth; and the extremities of the base are permanently fixed by dots marked on cannon, or on massive blocks of stone.

Deal Rods.—In the commencement of the English survey, General Roy made use of deal rods, 20 ft. 3 in. long, about 2 in. deep, and 1¼ in. broad, on which lengths of 20 ft. were laid off by Ramsden. They were constructed in such a manner that they might be used either by butting the end of one rod against the end of another, or by bringing fine transverse lines, inlaid into the upper surface at the distance of 1½ in. from each extremity, into exact coincidence; but the method of coincidences was attended with so much inconvenience and loss of time, that General Roy was compelled to abandon it, and to proceed solely by the method of contacts. Notwithstanding all the care, however, that was taken to select rods of the best materials, they were found liable to such irregular and sudden variations of length, from the moisture of the atmosphere, that they were entirely abandoned, after the first base on Hounslow Heath had been completed. The error in this measurement was found to be about 21 in.

Glass Rods.—When it was discovered that the deal rods would not prove satisfactory, it was proposed that glass rods should be substituted in their place. Tubes were used rather than solid rods, as it was found that a sufficient quantity of melted glass could not be taken on the irons which were used at the glass-house for drawing the rods. Three hollow tubes were, therefore, selected, and converted by Ramsden into measuring rods. They were then placed in cases, to which they were made fast in the middle, and also braced at two other points; the whole together serving as stays to keep the tubes in their true places from shaking, but not binding them too closely. The ends were ground perfectly smooth, and at right angles to the axis of the bore; one end having a fixed apparatus, or metal button, attached to it, for making the contacts, and the other end a movable apparatus or slider, which was pressed outwards by a slender spring. The fixed extremity of the succeeding rod was pushed against this spring until a fine line on the slider was brought into exact coincidence with another fine line on the glass rod, in which state the distance between the extremities was exactly 20 ft.

Steel Chains.—The third method of measuring a base line, by the English surveyors, was with a steel chain made by Ramsden. This chain was 100 ft. in length, and contained 40 links of 2½ ft. each. A transverse section of these links was a square, each of whose sides was ½ an inch. In using the chain five coffers were arranged in a straight line, and supported either by trestles or courses of bricks; the chain was placed on the coffers and stretched with a constant weight of 56 lbs. The ends were brought over the same point in this manner;—At the extremity of the chain, but unconnected with it, and on a separate post, was placed a scale. When the chain was in any position, the scale at the preceding end was moved by means of screws, until one of its divisions coincided exactly with the mark on the handle of the chain. This scale remaining in its place, the chain was carried forward into its next position, and adjusted, by means of its screw apparatus, until the mark in its following end coincided exactly with that division of the scale which had been in coincidence with the mark on the preceding end.

	Feet.
The measurement of the base on Hounslow Heath, made with deal rods, reduced to the lowest extremity, was found to be	27406·26
„ with glass tubes	27404·0843
„ with steel chain	27404·3155

The mean of the two last results, or 27404·2 ft., was assumed as the true length of the base in the future calculations.

Notwithstanding the near agreement of the two last methods of measuring a base line, it has been objected to the glass rods;—1st. That some error might arise from the ends of the two consecutive rods being made to rest on the same trestle, because when the first rod was taken off, the face of the trestle being pressed by one rod only, would have a tendency to incline a little forward, the effects of which would be to shorten the apparent length of the base. 2nd. That

some error might arise from the casual deviation of the rods from a straight line in the direction of the base. 3rd. That from the manner of supporting the rods on two trestles only, they would be liable to bend in the middle. To the steel chain it has also been objected, by Legendre and others, that, as the chain is not uniformly supported at every point, some doubt must remain whether it is perfectly straight when placed in the coffers, and also that its length is liable to vary from the rubbing and wear of the joints.

Rods of Platinum and Brass.—In the French surveys, rods of platinum were used. These were two toises, or 12 French feet, in length; their breadth was about six lines, or half a French inch, and their thickness one line. On the surface of the platinum was placed another rod of brass, firmly fixed at one end to the rod of platinum, by means of three screws, but entirely free at the other end, and throughout its whole length. It was about 6 in. shorter than the rod of platinum; and, from the different expansive powers of the two metals, the two rods united might be considered as a kind of metallic thermometer. Four rods were used in the measurement, three of which were always on the ground at the same time; and, in order to prevent any derangement from bringing the ends into contact, a small interval of about $\frac{1}{4}$ of an inch was left between them, which was measured by means of a slider attached to the preceding end of each rod. The slider was then pushed gently out, until it came into contact with the following end of the next rod.

Colonel Colby's Method.—The last method adopted, in the survey of Ireland, is an ingenious apparatus made by Troughton, Fig. 3223, which supersedes all other instruments. A B is a bar of iron, 10 ft. long, $1\frac{1}{2}$ in. deep, and $\frac{5}{8}$ of an inch broad, united to a bar of brass D E, of the same dimensions, at the distance of 2 in. These bars are firmly riveted together at their centres, but are free to move at the extremities, according to their respective expansions. The base D E is covered with a non-conducting substance, to make the two bars equally susceptible of heat. P D, Q E, are two tongues of steel, attached to the rods by double conical joints, around which they are capable of turning and forming a small angle with the lines perpendicular to the bars. P and Q are two dots of platinum, so exceedingly minute as to be almost invisible to the naked eye. At the temperature of 60° the bars are exactly of the same length, and the tongues P D, Q E, are then perpendicular to the bars; but if the temperature be increased, the bars will expand in different proportions; thus, if P *a d*, Q *b c*, represent the position of the tongues at the temperature of 70°, and the expansion of iron be to that of brass as 53 to 83, then A *a* : D *d* :: P A : P D :: 53 : 83.

3223.

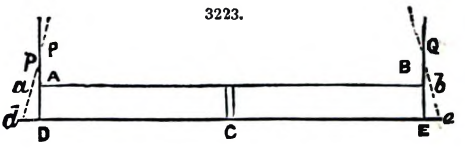

Hence the situation of the point P, about which the tongue P E revolves, is invariable, or at least is sensibly so in practice, for all moderate variations of temperature. The same thing is true with respect to the point Q, and consequently the distance P Q remains, in all moderate changes of temperature, of the exact length of 10 ft. It is evident, however, that this can only be true within certain limits; for, as P *d* is no longer equal to P D, the point P will have moved to *p*, nearer to *d*, making *p d* = P D; and the distance of *p* from P D is evidently equal to P D × (tan. D P *d* − sin. D P *d*). But as the angle D P *d* is, in practice, always extremely small, the difference between its tangent and its sine is altogether insensible.

In the Irish survey, five or six sets of bars, constructed in this manner, and placed in strong deal boxes, supported on trestles, were laid along the line to be measured, and accurately levelled. They were placed at a short distance from each other, and the distance between the dots on the adjacent steel tongues of two succeeding bars was accurately measured, by means of powerful micrometers, constructed so as to form a compensating instrument of the same nature as the measuring bars. It is stated that the greatest possible error of the base, measured on the eastern shore of Lough Foyle, cannot exceed 2 in., though the length is very nearly eight miles.

The Reduction of the Hypothenuses.—As the ground on which the base is measured is seldom perfectly level, the whole distance is divided into a number of inclined lines in the same vertical plane. Let A B be one of those lines, whose length is l, B C = h, the height of this plane, and the inclination of the plane B A C = θ. In the first English surveys, B C, the height of B above A, was found from levelling, and therefore the base A C = $\sqrt{(l^2 - h^2)}$. But in the latter surveys, as well as in those on the Continent, the angle θ was measured, and therefore the correction A B − A C is equal to l (1 − cos. θ).

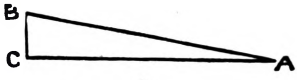

3224.

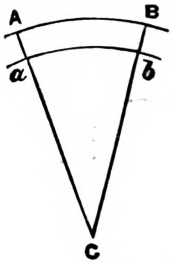

Correction of Temperature.—In the English survey, the temperature of the rods and chain was found from the mean of a number of thermometers; and the rate of expansion was previously determined by Ramsden. In the French survey, the measuring rod itself is the thermometer, and the difference of the rates of expansion between the platinum and the brass is carefully ascertained before the survey commences. In either case the correction is easily found by a single proportion, or by means of tables constructed for the purpose.

Reduction to the Level of the Sea.—Let A B, Fig. 3224, be the arc which has been measured, as described above, and corrected on account of temperature and the inclinations of the hypothenuses. This arc may be supposed to be taken at a mean between the heights of the two extreme points. Let *a b* be a concentric arc at the level of the sea, and C *a* the radius of the earth. Put C *a* = r, A *a* = h, A B = L, *a b* = l, we have then C A : C *a* :: A B : *a b*;

$$\therefore \quad l = \mathrm{L}\,\frac{r}{r+h} = \left(1 - \frac{h}{r} + \frac{h^2}{r^2} - \&c.\right) = \mathrm{L} - \frac{\mathrm{L}\,h}{r}, \qquad [3]$$

nearly. In order, therefore, to reduce the base to the level of the sea, we must subtract the correction $\frac{L h}{r}$ from the length.

We will now give, as an example, the final result of the measurement of the first base, with glass rods, on Hounslow Heath. (Trig. Survey, vol. i., p. 87.)

	Feet.
Hypothenusal length of the base as measured by 1369·925521 glass rods, of 20 ft. each + 4·31 ft.	27402·8204
Reduction of the hypothenuses, to be subtracted	− 0·0714
Add the difference between the expansion of the glass above, and the contraction of it below, 62°	+ 0·3489
Add also for 6° difference of temperature of the standard brass scale and the glass rods	+ 0·9864
Length of the base, in temperature 62°	27404·0843
Reduction from the height of the lower end of the base above the mean level of the sea, supposed to be 54 ft..	− 0·0706
True length of the base, reduced to the mean level of the sea ..	27404·0137

The Measurement and Reduction of the Angles.—In all the surveys made in the British dominions, the instrument for measuring angles has been a large theodolite, rendered as perfect as the ingenuity of English artists could make it. This instrument may be defined to be an altitude and azimuth instrument, or an instrument for measuring vertical and horizontal angles. The horizontal circle was 3 ft. in diameter, and angles could be measured with it to the fractional part of a second.

The instrument used by the French and Swedish surveyors was the repeating circle of Borda. The principle of the circle of repetition is to take the angle several times successively in continuation on the circle, and then divide the whole arc by the number of observations.

Let A B D, Fig. 3225, be a circle graduated entirely round the circumference from right to left on the upper side only of the instrument. A *a*, B *b*, are two telescopes, the one on the upper and the other on the under side of the instrument; these telescopes can either be moved independently or they may be clamped and moved altogether with the circle. Let P and Q be two objects whose angular distance is to be measured; and let the instrument by means of a stand be brought into the plane P C Q. Place the upper telescope A *a* at zero, and direct it to the object P; also direct the under telescope B *b* to the object Q. The two telescopes are then clamped, and the entire instrument is turned in its plane until B *b* be pointed to P. A *a* will now be in the position D *d*, making the angle *a* C *d* equal to *a* C *b*; unclamp it and turn it back to Q, while the circle itself remains fixed; it is evident that A *a* has moved through an angle *d* C *b*, equal to twice the required angle P C Q. The whole circle must now be turned again until A *a* points to P, then will B *b* be in the position D *d*; turn B *b* again through the angle *d* C *b* to Q and clamp it. As the under-side of the circle is not graduated, the angular distance of *b* from zero cannot be measured. Now move the whole circle until B *b* points to P, and turn A *a* again until it points to Q; the telescope A *a* will have been turned through four times the arc *a b*; and by repeating the process the arc can be multiplied any even number of times. It will readily be seen that the circle must always be turned to the *right* through the arc *b a*, and the two telescopes alternately to the *left* through *d b*, or twice the arc *a b*.

3225.

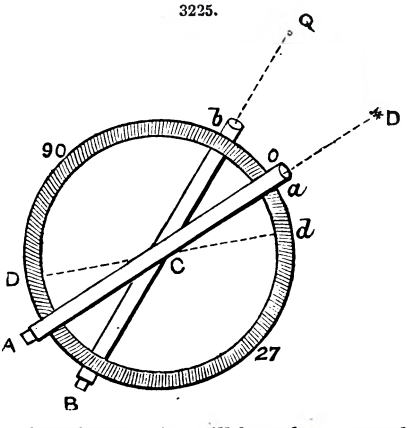

The advantages of this method are obvious. The errors of graduation may be diminished to any degree, and the errors of observation tend to destroy each other. The two circles which Delambre used were 0ᵐ·21 and 0ᵐ·18, or about 7 in. in diameter; and although the instruments were only graduated to minutes, yet by successively repeating the angle ten, twelve, or even as far as twenty times, he imagined that he could determine the angle within a second.

Various opinions have been entertained with respect to the relative merits of the theodolite and the repeating circle. The French have imagined that they could attain any degree of accuracy with the circle, and that all errors of division and errors of observation might be entirely annihilated by repetition.

When the angles are measured with a theodolite, no correction is required on account of the different altitudes of the signals, as it is the horizontal angle which is observed with the instrument; but when the sextant or repeating circle is employed, the oblique angles are observed, and these must be reduced to the plane of the horizon.

3226.

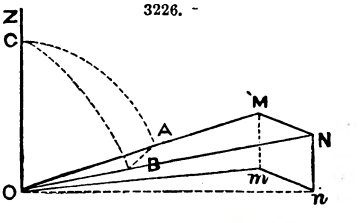

To reduce the oblique angles to the plane of the horizon.—Let O, Fig. 3226, be the place of the observer, M O N the angle observed between two signals M, N; M *m*, N *n*, two vertical lines meeting the horizontal plane *m* O *n* in the points *m*, *n*. Let O Z be a vertical line passing through O, and with the centre O and radius 1 conceive a sphere to be described, and let

the planes Z O M, Z O N, M O N, cut this sphere in the great circles C A, C B, A B. The angle observed with the repeating circle is the oblique angle M O N, which is measured by the arc A B, but the required angle is $m\,O\,n$, which is equal to the spherical angle C. The angles M O m, N O n, are known from observation, and therefore the complements of these angles, or the arcs C A, C B, are known. We have then, in the triangle C A B, the three sides C A, C B, A B, given to find the angle C.

Let h, h', be the altitudes of the two signals M and N, θ the angle between them; also, let the horizontal angle $= \theta + x$; then C A $= 90° - h$, C B $= 90° - h'$, A B $= \theta$, angle C $= \theta + x$. By Trig., $\cos.\ C = \dfrac{\cos.\ A\,B - \cos.\ C\,A \cos.\ C\,B}{\sin.\ C\,A \sin.\ C\,B}$, or $\cos.\ (\theta + x) = \dfrac{\cos.\ \theta - \sin.\ h \sin.\ h'}{\cos.\ h \cos.\ h'}$.

Now, in practice, h, h', are very small, and $\theta + x$ is nearly equal to θ, therefore x also is very small. Hence $\cos.\ (\theta + x) = \cos.\ \theta \cos.\ x - \sin.\ \theta \sin.\ x = \cos.\ \theta - x \sin.\ \theta$, nearly.

Also, $\cos.\ h \cos.\ h' = (1 - \frac{1}{2} h^2 + \&c.)\,(1 - \frac{1}{2} h'^2 + \&c.) = 1 - \frac{1}{2}(h^2 + h'^2) + \&c.$

$$\therefore \frac{1}{\cos.\ h \cos.\ h'} = \frac{1}{1 - \frac{1}{2}(h^2 + h'^2) + \&c.} = 1 + \tfrac{1}{2}(h^2 + h'^2), \text{ nearly, and } \sin.\ h \sin.\ h' = h\,h',$$

nearly. Substituting these values above, we have

$$\cos.\ \theta - x \sin.\ \theta = (\cos.\ \theta - h\,h')\ \{1 + \tfrac{1}{2}(h^2 + h'^2)\}.$$

$$\text{Hence } x \sin\ \theta = h\,h' - \tfrac{1}{2}(h^2 + h'^2) \cos.\ \theta = \frac{(h + h')^2 - (h - h')^2}{4} - \frac{(h + h')^2 + (h - h')^2}{4} \cos.\ \theta;$$

$$\therefore x = \frac{(h + h')^2}{4}\ \frac{1 - \cos.\ \theta}{\sin.\ \theta} - \frac{(h - h')^2}{4}\ \frac{1 + \cos.\ \theta}{\sin.\ \theta} = \tfrac{1}{4}(h + h')^2 \tan.\ \tfrac{1}{2}\theta - \tfrac{1}{4}(h - h')^2 \cot.\ \tfrac{1}{2}\theta.$$

Here x is measured in parts of the radius; if it be measured in seconds we have $x = x''$ sin. 1″; therefore

$$x'' = \frac{(h + h')^2}{4}\ \frac{\tan.\ \frac{1}{2}\theta}{\sin.\ 1''} - \frac{(h - h')^2}{4}\ \frac{\cot.\ \frac{1}{2}\theta}{\sin.\ 1''}. \qquad [4]$$

Example.—Let $\theta = 51° 9' 29''{\cdot}774$, $h = 1° 32' 45''$, $h' = 1° 7' 10''$, then $\frac{1}{2}(h + h') = 4797''{\cdot}5$, $\frac{1}{2}(h - h') = 767''{\cdot}5$.

2 log. $\frac{1}{2}(h + h')$	7·362030	2 log. $\frac{1}{2}(h - h')$	5·770156
tan. $\frac{1}{2}\theta$	9·680038	cot. $\frac{1}{2}\theta$	0·319962
ar. co. log. sin. 1″..	4·685575	ar. co. log. sin. 1″..	4·685575
53″·413	1·727643	5″·966	0·775693

	°	′	″
Observed angle	51	9	29·744
		+	53·413
		−	5·966
Angle reduced to the horizon	51	10	17·191

It sometimes happens, when the steeple of a church or other remarkable object is selected as a signal, that the theodolite cannot be placed immediately over the point occupied by the axis of the signal. In this case the instrument must be removed to some convenient place near it, and a reduction is then applied to the observed angle in order to obtain the true angle at the centre.

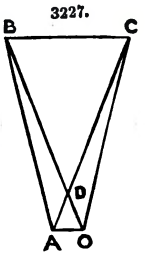

It is required to determine the reduction to the centre.—Let A, Fig. 3227, be the situation of the axis of the signal observed from the stations B and C, O the place of the centre of the instrument. Put A, B, C, for the angles of the triangle A B C, and a, b, c, for the sides, respectively, opposite to them. Let A O $= m$, angle A O B $= \beta$, angle A O C $= \gamma$, angle B O C $= O$; also, angle A B O $= x$, A C O $= y$. Now, angle A $=$ B D C $- x = O - x + y$; also, sin. x : sin. β :: m : c; sin. y : sin. γ :: m : b; $\therefore$ sin. $x = \dfrac{m \sin.\ \beta}{c}$, sin. $y = \dfrac{m \sin.\ \gamma}{b}$. But since O is always near the station A, the angles x and y are very small, and therefore sin. $x = x = x''$ sin. 1″, sin. $y = y = y''$ sin. 1″, very nearly. Hence

$$A = O - \frac{m \sin.\ \beta}{c \sin.\ 1''} + \frac{m \sin.\ \gamma}{b \sin.\ 1''}. \qquad [5]$$

When all the angles have been observed and reduced to the plane of the horizon, if the triangle were a plane one, their sum ought to be equal to 180°, and thus the correctness of the observations might be verified. But in a spherical triangle the sum of the three angles exceeds 180° by a certain quantity, called the *spherical excess;* and as this can be easily calculated, we have the same means of verifying the operation in Spherical as in Plane Trigonometry.

It is required to determine the spherical excess in a small triangle measured on the surface of the earth.—Let A, B, C, be the three angles of a spherical triangle, r the radius of the sphere expressed in feet, x the area of the triangle in square feet, and ϵ the spherical excess given in seconds; we

have then $x : \pi r^2 :: A + B + C - 180° (= \epsilon'') : 180 \times 60 \times 60$ seconds; $\therefore \epsilon = \frac{x \times 648000''}{\pi r^2}$;

and, if we suppose the mean value of r to be 20,888,761 ft., the logarithm of $\frac{\pi r^2}{648000}$ is equal to 9·32540. The value of x may be calculated as if the triangle were a plane one, without any sensible error. Hence we have the following

Rule.—From the logarithm of the area of the triangle, taken as a plane one in feet, subtract the constant logarithm 9·32540, the remainder will be the logarithm of the spherical excess in seconds, nearly.

When the triangles are very large, a more correct value of r will be obtained by computing for the mean latitude of the three stations, the radius of curvature of the meridian, and of the arc perpendicular to the meridian, and taking the mean of the two for the value of r.

The following example is taken from the Encyclopædia Britannica. The triangle connects the west of Scotland with Ireland, and is one of the largest which occurs in the Trigonometrical Survey.

The three stations are Benlomond, in Stirlingshire (A), Cairnsmuir-on-Deugh, in Kirkcudbright (B), and Knocklayd, in the county of Antrim (C); the arc c is 352037·62 ft., and the angles are as follows;—

	A	B	C
	° ′ ″	° ′ ″	° ′ ″
	56 43 29·97	79 42 28·69	43 34 38·36
	27·04		35·43
	28·72		
Mean ..	56 43 28·58		43 34 36·89

We shall first compute approximate values of the two sides, a, b (which will be afterwards required), from the formulæ $a = \frac{c \sin. A}{\sin. C}$, $b = \frac{c \sin. B}{\sin. C}$; and then compute the area from the formula, area $= \frac{1}{2} b c \sin. A$.

log. c = 5·54659	log. c = 5·54659	log. c = 5·54659
log. sin. A = 9·92223	log. sin. B = 9·99295	log. b = 5·70112
log. cosec. C = 0·16158	log. cosec. C = 0·16158	log. sin. A = 9·92223
		ar. co. log. 2 = 9·69897
log. a = 5·63040	log. b = 5·70112	log. area = 10·86891
a = 426970	b = 502480	

The latitude of Benlomond (the most northern station) is 56° 11′; and that of Knocklayd (the most southern) is 55° 10′; the mean of the two is 55° 40′. The values of the radii of curvature are therefore r = 20924824 ft., r' = 20968900 ft., mean = 20946862 ft.

$$\log. \frac{180 \times 60 \times 60}{\pi} = 5·31443$$
$$\log. r^2 = 14·64224$$
$$9·32781$$
$$\log. \text{area} = 10·86891$$
$$\epsilon = 34''·76 \;..\; .. \;\; 1·54110$$

The sum of the three angles of the triangle being found from observation = 180° 0′ 34″·16, and the true spherical excess being 34″·76, it appears that the errors of observation in the three angles are = − 0″·60. If there were no reason to suppose that one angle has been determined more accurately than another, the error should be equally divided among the three angles, but as it generally happens that some of the angles have been determined from a greater number of observations, or from observations made under more favourable circumstances than the others, this error should be distributed among the three angles in such a manner that the respective corrections may be inversely proportional to the relative goodness of the observations. For this purpose we have the following rule, given by Gauss, but which our limits will not permit us to demonstrate in this work.

To apportion the error among the different angles.—Rule.—Let l, l', l'', &c., be the seconds of reading in any angle A, n the number of observations, and let m be the mean or average of the whole: then $m - l$, $m - l'$, $m - l''$, &c., are the errors of the individual observations, and the *weight* of the determination, or of the average m, will be given from this equation,

$$x = \frac{\frac{1}{2} n^2}{(m-l)^2 + (m-l')^2 + (m-l'')^2 + \text{&c.}} \qquad [6]$$

In like manner, the weights y and z are found for the angles B and C. This error in the sum of the three angles is then divided into three parts, proportional to $\frac{1}{x}, \frac{1}{y}, \frac{1}{z}$, which are to be added respectively to the three angles A, B, and C

To apply this to the last example, we have for the angle A, $l = 29''{\cdot}97$, $l' = 27''{\cdot}04$, $l'' = 28''{\cdot}72$· therefore $n = 3$, $m = \frac{1}{3}(l + l' + l'') = 28''{\cdot}58$. Hence

$$\frac{1}{x} = \frac{(1{\cdot}39)^2 + (1{\cdot}54)^2 + (0{\cdot}14)^2}{\frac{1}{2} \times 9} = {\cdot}961.$$

The angle B was given from one observation only. We may, therefore, assume the weight $y = {\cdot}1$, and $\frac{1}{y} = 10$.

At C the reciprocal of the weight $\frac{1}{z} = \frac{(1{\cdot}47)^2 + (1{\cdot}46)^2}{\frac{1}{2} \times 4} = 2{\cdot}146$.

Hence the error $- 0''{\cdot}60$ is to be divided into three parts proportional to the numbers ·961, 10, 2·416; and consequently the corrections of the angles are, respectively, $+ 0''{\cdot}04$, $+ 0''{\cdot}46$, and $+ 0''{\cdot}10$. The true spherical angles, therefore, are

$$A = 56^\circ\ 53'\ 28''{\cdot}62;\ B = 79^\circ\ 42'\ 29''{\cdot}15;\ C = 43^\circ\ 44'\ 36''{\cdot}99.$$

The Calculation of the Sides of the Triangles.—The three spherical angles of the triangle being thus determined from observation, and corrected, and one of the sides being always known, either from actual measurement or calculation, it is necessary to show how the two other sides may be determined. The triangle may be considered as a spherical triangle, whose sides are very small, compared with the radius of the sphere; in which case three different methods have been employed for its solution;—1st. From the three given spherical angles, the angles formed by the chords are deduced, and from the given side of the triangle the corresponding chord is calculated. With these data the other chords are found by Plane Trigonometry, and from thence the arcs themselves. 2nd. A second method is by the theorem of Legendre, by which the spherical triangle is reduced to a plane triangle, whose sides are respectively equal in length to the sides of the triangle of the sphere. 3rd. The third method is to compute the sides by Spherical Trigonometry.

First Method.—To reduce the angle of a spherical triangle to the angle formed by the chords of the containing sides.—Let a, b, c, be the sides of the spherical triangle, and r the radius of the sphere, all measured in feet; also, let $\frac{a}{r} = \alpha$, $\frac{b}{r} = \beta$, $\frac{c}{r} = \gamma$, then will α, β, γ, be the sides of a similar triangle on a sphere whose radius is 1. Let A be the spherical angle opposite to the side a, and let $A - x$ be the corresponding angle formed by the chords. We have then

$$\cos.\ A = \frac{\cos.\ \alpha - \cos.\ \beta \cos.\ \gamma}{\sin.\ \beta \sin.\ \gamma}$$

$$= \frac{(1 - 2\sin.^2 \tfrac{1}{2}\alpha) - (1 - 2\sin.^2 \tfrac{1}{2}\beta)(1 - 2\sin.^2 \tfrac{1}{2}\gamma)}{2\sin.\ \frac{1}{2}\beta \cos.\ \frac{1}{2}\beta \times 2\sin.\ \frac{1}{2}\gamma \cos.\ \gamma}$$

$$= \frac{\sin.^2 \frac{1}{2}\beta + \sin.^2 \frac{1}{2}\gamma - \sin.^2 \frac{1}{2}\alpha}{2\sin.\ \frac{1}{2}\beta \sin.\ \frac{1}{2}\gamma \times \cos.\ \frac{1}{2}\beta \cos.\ \frac{1}{2}\gamma} = \frac{\sin.\ \frac{1}{2}\beta \sin.\ \frac{1}{2}\gamma}{\cos.\ \frac{1}{2}\beta \cos.\ \frac{1}{2}\gamma}.$$

Also, because chord $\alpha = 2\sin.\ \frac{1}{2}\alpha$, chord β = &c., we have, in the triangle formed by the chords,

$$\cos.\ (A - x) = \frac{\text{chord}^2\ \beta + \text{chord}^2\ \gamma - \text{chord}^2\ \alpha}{2\ \text{chord}\ \beta\ \text{chord}\ \gamma} = \frac{\sin.^2 \frac{1}{2}\beta + \sin.^2 \frac{1}{2}\gamma - \sin.^2 \frac{1}{2}\alpha}{2\sin.\ \frac{1}{2}\beta \sin.\ \frac{1}{2}\gamma}.$$

Substituting this in the preceding equation, we get

$$\cos.\ A = \frac{\cos.\ (A - x)}{\cos.\ \frac{1}{2}\beta \cos.\ \frac{1}{2}\gamma} - \frac{\sin.\ \frac{1}{2}\beta \sin.\ \frac{1}{2}\gamma}{\cos.\ \frac{1}{2}\beta \cos.\ \frac{1}{2}\gamma}$$

$$\therefore\ \cos.\ (A - x) = \sin.\ \tfrac{1}{2}\beta \sin.\ \tfrac{1}{2}\gamma + \cos.\ \tfrac{1}{2}\beta \cos.\ \tfrac{1}{2}\gamma \cos.\ A. \qquad [7]$$

This expression is exact. But, because the three arcs, α, β, γ, are very small, $A - x$ is nearly equal to A, and therefore x is also very small. Hence

$$\cos.\ (A - x) = \cos.\ A \cos.\ x + \sin.\ x \sin.\ A = \cos.\ A + x \sin.\ A, \text{ nearly.}$$

Also, $\sin.\ \frac{1}{2}\beta = \frac{1}{2}\beta$, $\cos.\ \frac{1}{2}\beta = 1 - \frac{1}{8}\beta^2$, $\sin.\ \frac{1}{2}\gamma$ = &c., very nearly. Hence, substituting these values in equation [7], and reducing, we obtain

$$x \sin.\ A = \tfrac{1}{4}\beta\gamma - \tfrac{1}{8}(\beta^2 + \gamma^2) \cos.\ A$$

$$= \frac{(\beta + \gamma)^2 - (\beta - \gamma)^2}{16} - \frac{(\beta + \gamma)^2 + (\beta - \gamma)^2}{16} \cos.\ A;$$

$$\therefore\ x = \frac{(\beta + \gamma)^2}{16} \frac{1 - \cos.\ A}{\sin.\ A} - \frac{(\beta - \gamma)^2}{16} \frac{1 + \cos.\ A}{\sin.\ A}$$

$$= \left(\frac{b + c}{4r}\right)^2 \tan.\ \tfrac{1}{2}A - \left(\frac{b - c}{4r}\right)^2 \cot.\ \tfrac{1}{2}A;$$

or, if x be estimated in seconds,

$$x'' = \left(\frac{b+c}{4r}\right)^2 \frac{\text{tan. } \frac{1}{2} A}{\text{sin. } 1''} = \left(\frac{b-c}{4r}\right)^2 \frac{\text{cot. } \frac{1}{2} A}{\text{sin. } 1''} \cdot \qquad [8]$$

Having obtained the three reduced angles, we find the chords of the spherical arcs intercepted between the stations, from Plane Trigonometry, and from them we deduce the arcs themselves, by means of the following formula;—

$$\frac{a}{2} = \text{sin. } \tfrac{1}{2} a + \frac{1}{2}\frac{(\text{sin. } \frac{1}{2} a)^3}{3} + \frac{1.3}{2.4}\frac{(\text{sin. } \frac{1}{2} a)^5}{5} + \&c.;$$

and because chord $a = 2$ sin. $\frac{1}{2} a$, and a is very small, if we neglect the terms after the second, and multiply by 2, we get $a = \text{chord } a + \frac{(\text{chord } a)^3}{24}$; hence $\frac{a}{r} = \frac{\text{chord } a}{r} + \frac{(\text{chord } a)^3}{24 r^3}$;

$$\therefore \quad a = \text{chord } a + \frac{(\text{chord } a)^3}{24 r^2} \cdot \qquad [9]$$

Example.—As an example of this method of solution, we will take the following;—

log. r^2	14·64224	(1)	9·46807
16 sin. 1″	5·88969	$(b-c)^2$	10·35468
	0·53193	cot. $\frac{1}{2}$ A	0·26765
(1)	9·46807	1″·231	0·09040
$(b+c)^2$	11·86342		+ 11·583
tan. A	9·73235		− 1·231
11″·583	1·06384	x =	10·352

In the same manner, the corrections for the angles B and C will be found to be 14″·684 and 9″·724 respectively. Hence the three angles formed by the chords are

$$A' = 56° 43' 18''·27,\ B' = 79° 42' 14''·47,\ C = 43° 34' 27''·26,$$

and the sum of these = 180°, as it should be.

The chord c having been previously found equal to 352033·48 ft., we are enabled to find the lengths of the chords opposite A′ and B′ from the proportions

$$\text{sin. } C' : \text{sin. } A' :: \text{chord } c : \text{chord } a;\ \text{sin. } C' : \text{sin. } B' :: \text{chord } c : \text{chord } b.$$

cosec. C′	0·1615956	.. ..	0·1615956
sin. A′	9·9222144	sin. B′	9·9929499
chord c	5·5465840	.. ..	5·5465840
chord a	5·6303940	chord b	5·7011295

Hence chord $a = 426966·69$ ft., chord $b = 352033·48$ ft.

We have now to determine the lengths of the arcs a and b from the corresponding chords, from formula [9]. Making use of the logarithms already given in the preceding solution, we readily find

$$\frac{(\text{chord } a)^3}{24 r^2} = 7·39,\ \frac{(\text{chord } b)^3}{24 r^2} = 12·05,\ \frac{(\text{chord } c)^3}{24 r^2} = 4·14,$$

and therefore the lengths of the arcs are $a = 426974·08$, $b = 502504·51$, $c = 352037·62$.

Second Method.—Legendre's Theorem.—If the three sides of a plane triangle be equal to the three sides of a small spherical triangle, respectively, the difference between each of the angles of the plane triangle, and the corresponding angle of the spherical triangle, will be equal to one-third of the spherical excess.—As before, let a, b, c, be the three sides of the small spherical triangle, measured in feet, r the radius of the sphere, and $\frac{a}{r} = \alpha$, $\frac{b}{r} = \beta$, $\frac{c}{r} = \gamma$. Also, let A be the spherical angle opposite to the side α, and A′ the corresponding angle in a plane triangle, whose sides are a, b, c. We have then, as before, cos. $A = \frac{\text{cos. } \alpha - \text{cos. } \beta \text{ cos. } \gamma}{\text{sin. } \beta \text{ sin. } \gamma}$.

If we now expand each of the quantities cos. α, cos. β, sin. β, &c., in a series, and arrange the terms according to the powers of α, β, γ, we shall find that the terms of the first order will be the same as if the triangle were rectilineal, and those of the second order will contain the fourth powers of the arc in the numerator, and the second powers in the denominator. Neglecting, therefore,

all powers higher than the fourth, we have cos. $\alpha = 1 - \frac{1}{2}\alpha^2 + \frac{1}{24}\alpha^4$, sin. $\beta = \beta - \frac{1}{6}\beta^3$, cos. β = &c.

Substituting these values in the preceding equation, it becomes

$$\text{cos. A} = \frac{\frac{1}{2}(\beta^2 + \gamma^2 - \alpha^2) + \frac{1}{24}(\alpha^4 - \beta^4 - \gamma^4) - \frac{1}{4}\beta^2\gamma^2}{\beta\gamma(1 - \frac{1}{6}\beta^2 - \frac{1}{6}\gamma^2)}.$$

And because $\frac{1}{1 - \frac{1}{6}(\beta^2 + \gamma^2)} = 1 + \frac{1}{6}(\beta^2 + \gamma^2) + \frac{1}{36}(\beta^2 + \gamma^2)^2 +$ &c., if we substitute this above, and neglect all terms containing powers higher than the fourth, we get

$$\text{cos. A} = \frac{\beta^2 + \gamma^2 - \alpha^2}{\beta\gamma} + \frac{\alpha^4 + \beta^4 + \gamma^4 - 2\alpha^2\beta^2 - 2\alpha^2\gamma^2 - 2\beta^2\gamma^2}{24\beta\gamma}$$

$$= \frac{b^2 + c^2 - a^2}{2bc} + \frac{a^4 + b^4 + c^4 - 2a^2c^2 - 2a^2c^2 - 2b^2c^2}{24bc \times r^2}.$$

But $\frac{b^2 + c^2 - a^2}{2bc} = \text{cos. A}'$ also $2a^2b^2 + 2a^2c^2 + 2b^2c^2 - a^4 - b^4 - c^4 = (4 \text{ area})^2 = 16\,S^2$;

$$\therefore \text{ cos. A} = \text{cos. A}' - \frac{2S^2}{3bc \times r^2}. \qquad [10]$$

Let $A = A' + x$, then x is evidently a very small angle, consequently

$$\text{cos. A} = \text{cos. A}' \text{ cos. } x - \text{sin. } x \text{ sin. A}' = \text{cos. A}' - x \text{ sin. A}', \text{ nearly.}$$

Comparing this value of cos. A with equation [10], we have

$$x = \frac{2S^2}{3r^2 \times bc \text{ sin. A}'} = \frac{S}{3r^2}.$$

Hence
$$A' = A - \frac{S}{3r^2}. \qquad [11]$$

In like manner,
$$B' = B - \frac{S}{3r^2}, \quad C' = C - \frac{S}{3r^2};$$

$$A' + B' + C' = 180° = A + B + C - \frac{S}{r^2}.$$

Hence $\frac{S}{r^2}$ is the excess of the three angles of the spherical triangle above two right angles, and each of the angles A, B, C, exceeds the corresponding angle of the plane triangle by one-third of this spherical excess.

Example.—Taking the same example as before, we find the spherical excess = 34″·76, and one-third of this excess = 11″·59. Hence A′ = 56° 43′ 17″·04, B′ = 79° 42′ 17″·56, C′ = 43° 34′ 25″·40. With these angles, and the given side c = 352037·62 ft., we then compute the other sides, a, b, by Plane Trigonometry, sin. C′ : sin. A′ :: c : a, and sin. C′ : sin. B′ :: c : b.

cosec. C	0·1615997	.. ..	0·1615997
sin. A′	9·9222127	sin. B′	9·9929511
c	5·5465891	.. ..	5·5465891
a	5·6304015	b	5·7011399

Hence a = 426974·06 ft., b = 502504·42 ft.

Third Method.—To compute the sides by Spherical Trigonometry.—By Trig.,

$$\text{sin. C} : \text{sin. A} :: \text{sin. } c : \text{sin. } a. \qquad [\alpha]$$

And since c and a are very small, compared with the radius of the sphere,

$$\frac{\text{sin. } c}{r} = \frac{c}{r} - \frac{c^3}{6r^3}, \text{ nearly,} \qquad \therefore \text{ sin. } c = c\left(1 - \frac{c^2}{6r^2}\right)$$

$$\text{log. sin. } c = \text{log. } c + \text{log.}\left(1 - \frac{c^2}{6r^2}\right) = \text{log. } c - \frac{M}{6r^2}c^2, \qquad [12]$$

nearly, these logarithms being taken from the common tables, and M being the modulus of the system. Having found log. sin. c from this expression, we get log. sin. a from proportion [α]. We then obtain a from the equation

$$\text{log. } a = \text{log. sin. } a + \frac{M}{6r^2}a^2 = \text{log. sin. } a + \frac{M}{6r^2}\text{sin.}^2 a. \qquad [13]$$

Example.—To apply this to the last example,

log. r^2	.. .. ..	14·64224	
$\frac{1}{6}$ M	.. .. ..	8·85963	
(1)	.. ..	4·21739	
c^2	.. ..	11·09318	
·0000204	.. ..	$\bar{5}$·31057	
sin. a	.. .. ..	5·63037	
		5·63037	
(1)	.. ..	4·21739	
0000301	.. ..	$\bar{5}$·47813	

log. c	.. .. ..	5·5465891
		·0000204
sin. c	.. .. ..	5·0465687
sin. A	.. .. ..	9·9222287
cosec. C	.. ..	0·1615740
sin. a	.. .. ..	5·6303714
		·0000301
a	.. ..	5·6304015

As the logarithm of a is exactly the same as that which we obtained by Legendre's method, the arc itself will also be the same as before.

The logarithm of the side b is found in the same manner = 5·7011398, which only differs from the former logarithm by a unit in the last place of decimals.

In comparing these three methods together, Legendre's certainly appears to be the most simple, and the first method perhaps the most difficult. They are all, however, rendered considerably more easy in practice by means of auxiliary tables, previously calculated. The third method also has an advantage over the two others, in this respect, that if any of the angles (A for example) be one of the angles in another triangle, as in calculating the latitudes and azimuths, no further correction will be necessary; whereas, in the first and second methods, a new reduction must be made in order to obtain the angles for calculation. The whole may be brought under one view in the following Table;—

Stations.	Observed Angles.			Apportionment of Error.	Spherical Angles.	Chord Angles.	Mean Angles.	Opposite Chords.	Opposite Arcs.
	°	′	″	″	″	″	″		
A	56	43	28·58	+ 0·04	28·62	18·27	17·04	426966·69	426974·08
B	79	42	28·69	+ 0·46	29·15	14·47	17·56	502492·46	502504·51
C	43	34	36·89	+ 0·10	36·99	27·26	25·40	352033·48	352037·62
	180	0	34·16	0·60	34·76	0·00	0·00		

Calculation of the Latitudes, Longitudes, and Azimuths.—When all the sides of the principal triangles have been found, by one of the methods described in the preceding articles, we proceed to determine the latitudes and longitudes of the different stations, and the inclinations which the sides of the triangles make with the meridian. For this purpose it is necessary that the latitude of one of the stations and the azimuth of one of the sides should be found independently, by astronomical means; and from them we may determine the longitudes and latitudes of all the other stations, and the azimuths of the sides of the triangles. We shall first suppose the earth to be a sphere, and afterwards correct the error arising from this hypothesis.

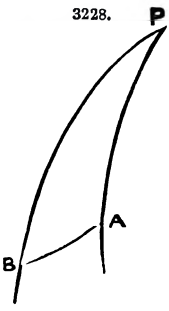

Given the latitude of a station A, *the distance of* A *from another station* B, *and also the azimuth of* B *as seen from* A, *to determine the latitude of* B, *the earth being considered as a sphere.*—Let P, Fig. 3228, be the pole of the earth, P A, P B, the meridians of the stations A and B. Let the angle P A B = A, P B A = B, arc P A = 90° − l, P B = 90° − l', and $l - l' = \lambda$; also, let the arc A B measured in feet = D, and in parts of the radius = δ; and let the radius of the earth measured in feet = r. We have then, from Spherical Trigonometry, cos. P B = cos. P A cos. A B + sin. P A sin. A B cos. A, or

$$\sin. l' = \sin. \iota \cos \delta + \cos. l \sin. \delta \cos. A. \qquad [\alpha]$$

But sin. l' = sin. $(l - \lambda)$ = sin. l cos. λ − cos. l sin. λ = sin. $l\,(1 - \frac{1}{2}\lambda^2) - \lambda$ cos. l.

Also, cos. $\delta = -\frac{1}{2}\delta^2$, sin. $\delta = \delta$, neglecting all the powers of δ and λ higher than the second.

Making these substitutions in equation [α], we have

$$\sin. l\,(1 - \tfrac{1}{2}\lambda^2) - \lambda \cos. l = \sin. l\,(1 - \tfrac{1}{2}\delta^2) - \delta \cos. l \cos. A$$

$$\therefore\ \lambda = \delta \cos. A + \tfrac{1}{2}(\delta^2 - \lambda^2) \tan. l.$$

For a first approximation, we may neglect the second powers of δ and λ, and assume $\lambda = \delta$ cos. A, which is the same thing as if we supposed the meridians at A and B to be parallel. Substituting this first value of λ in the second member of the last equation, we obtain

$$\lambda = \delta \cos. A + \tfrac{1}{2}\delta^2 \sin.^2 A \tan. l.$$

Here λ and δ are measured in parts of the radius. If λ'' be the number of seconds in λ, then $\lambda = \lambda'' \sin. 1''$; also $\delta = \frac{D}{r}$. Making these substitutions, the last equation becomes

$$\lambda'' = \frac{D \cos. A}{r \sin. 1''} + \frac{D^2 \sin.^2 A \tan. l}{2 r^2 \sin. 1''}. \qquad [14]$$

To determine the same when the spheroidal figure of the earth is taken into consideration.—Let P A, P B, Fig. 3229, be the meridians of A and B, the earth being considered as a spheroid; let A M, B N, be the normals to the surface meeting the polar axis in M and N; join B M. Suppose A p B to be the surface of a sphere whose centre is M, and radius M A. Then, because the arc A B is very small, and A M is a normal to the spheroid, it is nearly equal to the radius of curvature at A, therefore the surface of the sphere will very nearly pass through B, and the difference between the arc A B on the sphere and on the spheroid will be altogether insensible. The spheroidal triangle p A B may be considered as that whose solution we have just given, and on this supposition B M $p = 90° - l'$ is the colatitude of B. But the true colatitude of B is the angle B N P $= 90° - L$, which is greater than B M P by the angle M B N. Let $l - l' = \lambda$, $l' - L =$ M B N $= \phi$; we have then, in the triangle B M N,

3229.

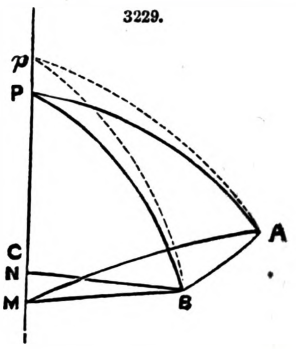

$$\sin. \phi = \frac{M N}{B M} \sin. B N M = \frac{C M - C N}{B M} \cos. L;$$

but C M $=$ A M $. e^2 \sin. l$, C N $=$ B N $. e^2 \sin. L$, therefore

$$\sin. \phi = e^2 \cos. L \left(\frac{A M}{B M} \sin. l - \frac{B N}{B M} \sin. L \right).$$

And since $\frac{A M}{B M}$ and $\frac{B N}{B M}$ differ from unity by a quantity of a very minute order, we have

$$\sin. \phi = e^2 \cos. L (\sin. l - \sin. L), \text{ very nearly.}$$

Now, sin. L $=$ sin. $\{ l - (\lambda + \phi) \} =$ sin. $l -$ ($\lambda + \phi$) cos. l, nearly. Also, sin. $\phi = \phi$, very nearly; therefore $\phi = e^2 (\lambda + \phi) \cos. L \cos. l$. Hence, transposing and dividing,

$$\phi = \frac{e^2 \lambda \cos. L \cos. l}{1 - e^2 \cos. L \cos. l} = e^2 \lambda \cos. L \cos. l, \text{ nearly;}$$

$$\therefore \quad \phi = e^2 \lambda \cos.^2 l, \text{ nearly, and } \lambda + \phi = \lambda (1 + e^2 \cos.^2 l).$$

Hence, on the spheroid, the difference of latitude

$$l - L = \left\{ \frac{D \cos. A}{r \sin. 1''} + \frac{D^2 \sin.^2 A \tan. l}{2 r^2 \sin. 1''} \right\} (1 + e^2 \cos.^2 l), \qquad [15]$$

where $r =$ A M, the normal to the surface at the station A.

The same things being given, to find the difference of longitude.—The difference of longitude on the sphere is the angle A p B, which is equal to A P B, the difference of longitude on the spheroid. We have then, by Spherical Trigonometry, sin. B p : sin. A :: sin. δ : sin. p :: δ : p But sin. B p $=$ cos. $l' =$ cos. L, very nearly, $\delta = D \div r$, $p = P = P'' \sin. 1''$, therefore

$$P'' = \frac{D \sin. A}{r \cos. L \sin. 1''}. \qquad [16]$$

To find the azimuth of A *as seen from* B.—In the spherical triangle A p B we have, from Napier's analogies, cos. $\frac{1}{2}$ (p B $+ p$ A) : cos. $\frac{1}{2}$ (B $p -$ p A) :: cot. $\frac{1}{2} p$: tan. $\frac{1}{2}$ (A $+$ B).

Now, $\frac{1}{2}$ (p B $+ p$ A) $= \frac{1}{2}$ (90° $- l'$) $+ \frac{1}{2}$ (90° $- l$) $= 90° - \frac{1}{2}$ ($l + l'$), $\frac{1}{2}$ (p B $- p$ A) $= \frac{1}{2}$ ($l - l'$), $\frac{1}{2}$ (A $+$ B) $= 90° - \frac{1}{2}$ (180 $-$ A $-$ B).

Making these substitutions, this proportion becomes

$$\sin. \tfrac{1}{2} (l + l') : \cos. \tfrac{1}{2} (l - l') :: \cot. \tfrac{1}{2} p : \cot. \tfrac{1}{2} (180° - A - B)$$
$$:: \tan. \tfrac{1}{2} (180° - A - B) : \tan \tfrac{1}{2} p.$$

And because the distance A B is always very small, compared with the radius of the earth, A $+$ B is nearly equal to 180°, and therefore 180° $-$ A $-$ B is a very small angle. Also, $\frac{1}{2} p$ or $\frac{1}{2}$ P is very small. We may therefore substitute the arcs for the tangents, and also L for l', without sensible error. Hence, forming an equation, we obtain

$$B = 180° - A - P \frac{\sin. \frac{1}{2} (l + L)}{\cos. \frac{1}{2} (l - L)}. \qquad [17]$$

The angle B, which we have calculated, is the spherical angle p B A, or the angle contained between the planes M B v M B A; but the true azimuth is the spheroidal angle contained between

the planes N B P, N B A; the difference, however, between these angles has been proved by Delambre to be so small as not to be sensible in practice.

In the trigonometrical survey the angles are measured either from the north or south to the east or west; but in the "base du système mètrique," the angles are measured from the south towards the west, entirely round the circle.

To determine the azimuth of one of the signals independently from astronomical observations.—The general principle of the method is this. The error of a clock or chronometer is found either by means of a transit instrument, or by observations of equal altitudes, or by single altitudes, if the latitude of the place be well known. The observer then takes the angle (θ) between the signal and the sun, or a star, when near the horizon, and notes the time when the observation was made. The azimuth of the heavenly body is also calculated for this time; the latitude and declination being known. Then the sum or difference of the angle θ and the azimuth of the heavenly body will give the azimuth of the signal required. The refraction will scarcely affect the result, but a small error in the time would produce a considerable error in the azimuth.

The method adopted in the trigonometrical survey was to take the mean of the two angles observed with the theodolite, between a flagstaff and the pole star at its greatest elongation east and west. But, from the great altitude of the pole star in our latitudes, any error in the adjustment of the cross axis of the theodolite to horizontality, would materially affect the resulting azimuth.

Example.—From the Trigonometrical Survey, vol. ii., p. 88, the distance of Black Down from Dunnose = 314397·5 ft., the latitude of Dunnose = 50° 37′ 7″·3 N., and azimuth of Black Down, as seen from Dunnose = 84° 54′ 52″·5 N.W. Required the latitude and longitude of Black Down, and the azimuth of Dunnose, as seen from Black Down.

To find the latitude.—The normal A M, which is equal to r the radius of the curvature at A, perpendicular to the meridian, is found = 20963000, nearly.

log. r	7·32145	$2r^2$ sin. 1″	9·62950
sin. 1″	4·68557		
	2·00702	ar. co.	0·37050
		D²	10·99470
ar. co.	7·99298	sin.² A	9·99658
D	5·49735	tan. l	0·08573
cos. A	8·94763	$(1 + e^2 \cos.^2 l)$	0·00116
$(1 + e^2 \cos.^2 l)$	0·00116		
		28″·10	1·44867
274″·87	2·43912		

Hence $l - \mathrm{L} = \times 274''{\cdot}87 + 28''{\cdot}10 = -4'\ 6''{\cdot}77$, and $\mathrm{L} = l + 4'\ 6''{\cdot}77 = 50°\ 41'\ 14''{\cdot}07$.

To find the Difference of Longitude.

ar. co. log. r sin. 1″ ..	7·99298
D	5·49735
sin. A	9·99829
sec. L	0·19822
4862″·3	3·68684

Hence P = 1° 21′ 2″·3; and since the longitude of Dunnose was previously found = 1° 11′ 36″, therefore, the long. of Black Down = 2° 32′ 38″·3.

To find the Azimuth.

sin. ½ $(l + \mathrm{L})$	9·88836
cos. ½ $(\mathrm{L} - l)$	0·00000
P	3·68684
3760″·12	3·57520

Hence
P B A = 180° − A − 1° 2′ 40″·12 = 94° 2′ 27″·38.
The observed angle P B A was 94° 2′ 22″·75.

In the survey, the value of P is found to be 1° 20′ 46″·4. The difference, 15″·9, arises from an erroneous assumption in the length of the perpendicular degree, which gives all the longitudes on the southern coast of England too small.

Heights of the Stations, and Terrestrial Refraction.—To find the altitude of the station B *above the station* A.—Let C, Fig. 3230, be the centre of the earth, supposed to be a sphere, and A and B two stations on its surface. Draw A D, B D, perpendicular to the radii C A, C B, respectively, in the plane C A B; and suppose a and b to be the apparent places of A and B as seen from each other, and elevated by refraction. If the rays of light proceeded in straight lines, the angle D A B would be the depression of B below the horizon of A, and D B A the depression of A below the horizon of B. And because D A C, D B C, are right angles, C + D = 180° = D A B + D B A + D, and ∴ C = D A B + D B A. Also, since the distance A B is known, and the radius of the earth (sufficiently near for this purpose), the angle C can easily be found.

3230.

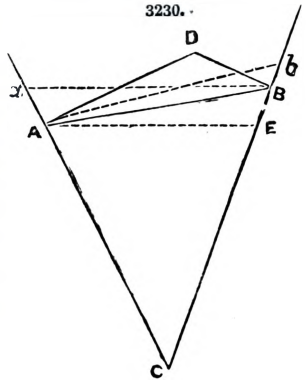

Let α, β, be the observed depressions at A and B respectively, and ρ, ρ', the two refractions, then

$$\mathrm{D\,A\,B} = \alpha + \rho,\ \mathrm{D\,B\,A} = \beta + \rho',\ \text{and}\ (\alpha + \rho) + (\beta + \rho') = \mathrm{C};$$

$$\therefore\ \text{mean refraction } \tfrac{1}{2}(\rho + \rho') = \tfrac{1}{2}(\mathrm{C} - \alpha - \beta). \qquad [18]$$

Let E be the point in C B which is on the same level with A, then C E = C A, and E B is the

altitude of B above A, which is to be determined. Join A E, then the angle D A E = 90° − C A E = ½ C, therefore the angle

$$B A E = \phi = D A E - D A B = \tfrac{1}{2} C - (\alpha + \rho); \qquad [19]$$

and since the angle B A E is always very small, and B E A very nearly a right angle,

$$B E = A E \times \phi = D \times \phi'' \sin. 1''. \qquad [20]$$

If one of the stations, B for example, is elevated above the horizon of A, β must be considered negative. Also, each observation must be reduced, previously to the calculation, to the place of the axis of the instrument.

Example.—At Allington Knoll the top of the staff on Tenterden steeple was depressed 3′ 5″; and the axis of the instrument was 5½ ft. above the ground: on Tenterden steeple the ground at Allington Knoll was depressed 3′ 35″, and the axis of the instrument was 3·1 ft. below the top of the staff. The distance between the stations being 61,777 ft., it is required to calculate the mean refraction, and also the height of Tenterden steeple above Allington Knoll. (Trig. Survey, vol. i., p. 176.)

The angle which a perpendicular height of 5·5 ft. subtends at the distance = 61777 ft. is $\frac{5{\cdot}5}{61777 + \text{sin. } 1''} = 18''{\cdot}4$; and in like manner the angle which 3·1 ft. subtends is 10″·4. Hence

	′	″
Depression of the top of the staff	3	51
Correction due to 3·1 ft.	+	10·4
Depression of instrument	1	1·4
Depression of the ground	3	35
Correction due to 5½ ft.	−	18·4
Depression of instrument	3	16·6

Length of perpendicular degree at Tenterden (vol. i., p. 168) = 61185 fathoms.

Fathoms. Feet. ° ′ ″

61185 : 61777 :: 1 : 10 6

	′	″
β	4	1·4
α	3	16·6
$\alpha + \beta$	7	18·0
C	10	6
$\rho \times \rho'$	2	48
Mean refraction	1	24

Hence $\phi'' = \frac{1}{2} C - (\alpha +$ mean refr.$) = 22''{\cdot}4$, and $h = D \times \phi'' \sin. 1'' = 6{\cdot}7$ ft.

The vertical height of the axis at Allington Knoll had been previously found to be 329 ft., so that the height of the axis on Tenterden steeple was 322·3 ft.

To find the absolute altitudes it is necessary that the heights of one or more of the stations be ascertained by actually levelling down to the surface of the sea. The heights of all the intermediate stations are then determined by the reciprocal angles of elevation or depression, carried on from station to station, and it is obvious that a verification will be obtained for every three stations; for the difference of altitude between A and B, when found from direct observation, ought to be the same as when deduced from the difference of the heights of each of those stations and a third station C.

3231.

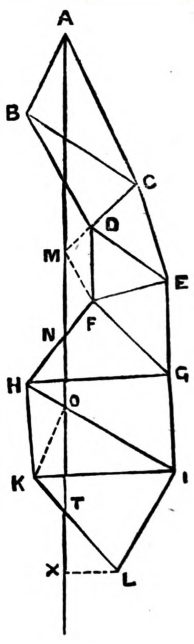

In the preceding example the effect of refraction is $\frac{1}{7}$ of the intercepted arc. In other cases the refraction varied from $\frac{1}{6}$ to $\frac{1}{30}$ of the contained arc. When reciprocal observations could not be obtained, $\frac{1}{12}$ of C was generally assumed as a mean value of ρ, in order to obtain the angle ϕ in equation [19].

Measurement of the Arcs of the Meridian, and the Arcs parallel to the Equator.—When a chain of triangles has been formed nearly in the direction of the arc of a meridian, and all the sides have been computed, according to the preceding rules, we are enabled to determine the length of the arc of the meridian intercepted between the parallels of the extreme stations. For this purpose two different methods have been adopted, which we shall briefly explain.

The Method of Oblique-angled Triangles.—To measure the arc of the meridian intercepted between the parallels of A *and* L. — Let A B C D . . ., Fig. 3231, be a chain of triangles lying nearly in the direction of the meridian A X. All the sides of the triangles are supposed to have been previously computed, and the angle C A X is given from observation. Produce C D to M, join F M; and, from the last station L, draw L X perpendicular to the meridian A X. The following spherical triangles will then be most easily solved, according to Legendre's method, by first computing the spherical excess in each case, and then deducting one-third of this excess from each of the spherical angles.

In the triangle A C M, there are given A C, ∠ A C M, ∠ C A M, to find A M, C M, and ∠ A M C.

Then D M = C M − C D, and ∠ M D F = 180° − C D F.

In the triangle D M F are given D F, D M, ∠ D, to find M F, ∠ D M F, ∠ D F M.

$$\angle F M N = 180° - (A M C + D M F); \quad \angle M F N = D F N - D F M.$$

In the triangle M F N are given M F, $\angle$ F M N, $\angle$ M F N, to find M N, F N, and $\angle$ M N F.

$$H N = F H - F N, \text{ and } \angle F N M = H N O.$$

In the triangle H N O are given H N, $\angle$ H N O, $\angle$ N H O, to find N O, H O, and $\angle$ H O N.

Lastly, in resolving the triangles H O K, O K T, L X T, we find O T and T X. Hence we have, by addition, A X = A M + M N + N O + O T + T X.

It must be observed, however, that the point X is not in the same parallel of latitude with L. Suppose the latitude of A to be greater than that of X, and let L = the latitude of L, and L + x = the latitude of X, also put L X = p; if then we suppose X A produced to meet the meridian of L in the pole P, we shall have cos. P L = cos. P X cos. L X, or

$$\sin.(L + x) = \sin. x \cos. L + \sin. L \cos. x = \frac{\sin. L}{\cos. p}.$$

But $\sin. x = x - \frac{1}{6}x^3 + \&c.$, $\cos. x = 1 - \frac{1}{2}x^2 + \&c.$, $\cos. p = 1 - \frac{1}{2}p^2 + \&c.$, consequently we have cos. L (x − &c.) + sin. L (1 − $\frac{1}{2}x^2$ + &c.) = sin. L (1 + $\frac{1}{2}p^2$ + &c.);

$$\therefore \quad x = \tan. L (\tfrac{1}{2}p^2 + \tfrac{1}{2}x^2) + \&c.$$

Hence x is of the second order, with respect to p, and therefore the term involving x^2 being of the fourth order may be neglected. Hence $x = \frac{1}{2}p^2$ tan. L. In this expression p and x are measured in parts of the radius; if we suppose them to be measured in feet, we must substitute $\frac{p}{r}$ and $\frac{x}{r}$ for p and x, therefore the correction to be added to A X (the latitude of A being greater than that of X) is

$$x = \frac{p^2}{r^2} \tan. L. \qquad [21]$$

The Method of Parallels.—The method employed by Delambre to determine the length of the arc of the meridian, was to project on the principal meridian all the stations to the east, by means of circles parallel to the equator. He then computed the distance between every two succeeding parallels from formula [15]; the sum of all these distances will give the entire length of the meridian between the extreme stations. Having done the same for the stations to the west of the meridian, these two sums ought to give the same value for the length of the total arc of the meridian, and thus the two computations serve to verify each other. If the two sums do not agree, a mean should be taken between the two for the total arc. This method, however, can only be applied when the dimensions of the earth are previously known with tolerable accuracy.

3232.

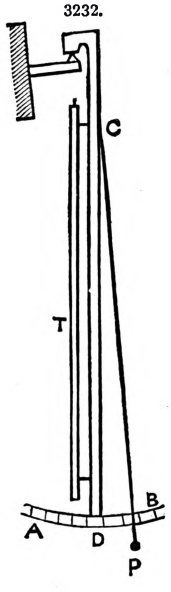

When the distance between the parallels of the extreme stations has been determined in this manner, it only remains to determine the latitudes of these stations, and the amplitude of the corresponding celestial arc. This is the most difficult part of the whole operation. The error of a single second in the difference of latitude is equivalent to about 100 ft. on the terrestrial meridian, and therefore it is obvious that an error in the latitude is of far more importance than any which can affect the measurement of the base, the angles of the triangles, or the direction of the meridian. In the English survey, and in India, the latitudes were observed with a zenith sector.

The principle of the zenith sector is this;—A B, Fig. 3232, is an arc of a circle, having a long radius C D, to which is firmly fixed a telescope T of the same length. The instrument is suspended vertically, and the telescope (with the arc fixed to it) can be moved in the plane of the meridian a few degrees on each side of the vertical line so as to observe stars within a few degrees of the zenith. A plumb line C P suspended from the centre of the instrument and passing over the arc A B, shows the angle between C D and the vertical line C P. This instrument can be turned half round in azimuth, so that if observations be made on the same stars in the two positions any error in the place of the zero of graduation will be entirely removed; for the zenith distance will be as much too great in the one case as it was too little in the other. The telescope of the sector used in the British survey was 8 ft. in length.

3233.

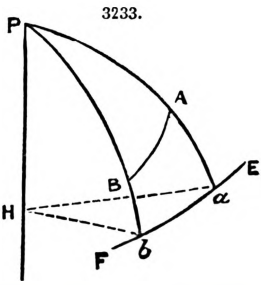

In France the small repeating circle, before described, was used to determine the latitudes; and it has justly been doubted whether this instrument can be safely relied on for determining so important an element as the latitude.

To determine the length of an arc parallel to the equator.—Let A B, Fig. 3233, be one of the sides of a chain of triangles which lie in a direction nearly perpendicular to the meridian, and let E F be the parallel on which the sides of all the triangles are to be projected. Draw the meridians P A a, P B b, then it is required to determine the length of the arc a b in feet. Let L = the latitude of the parallel E F, l = the latitude of B, z = the azimuth P A B, N = the normal at b, and N′ = ditto at B; also, let A B measured in feet = D, and in parts of the radius = δ. We have then in the spherical triangle A P B, sin. P : sin. z :: sin. δ : cos. l, and because P and δ are small

arcs, sin. $P = P - \frac{1}{6} P^3$, sin. $\delta = \delta - \frac{1}{6}\delta^3$, very nearly; therefore, making an equation and transposing, $P = (\delta - \frac{1}{6}\delta^3)\frac{\text{sin. } z}{\text{cos. } l} + \frac{1}{6} P^3$. As a first approximation, we have $P = \delta \frac{\text{sin. } z}{\text{cos. } l}$; substituting this value of P in the second member of the last equation, we get

$$\text{H} = \delta \frac{\text{sin. } z}{\text{cos. } l} - \frac{1}{6}\delta^3 \frac{\text{sin. } z}{l}\left(1 - \frac{\text{sin.}^2 z}{\text{cos.}^2 l}\right). \qquad [a]$$

Let H be the centre of the circle E F, and let $a\,b$ measured in feet $= p$, then $p : b\,\text{H} :: $ measure of the angle $a\,\text{H}\,b$ or $\text{P} : 1$; $\therefore p = \text{P} \times b\,\text{H} = \text{P} \times \text{N cos. L}$, equation [26]; also $\delta = \frac{\text{D}}{\text{N}'}$. Making these substitutions in equation [a], we get

$$p = \frac{\text{N cos. L}}{\text{N}' \text{ cos. } l}\left\{\text{D sin. } z - \frac{\text{D}^3 \text{ sin. } z}{6\,\text{N}'^2}\left(1 - \frac{\text{sin.}^2 z}{\text{cos.}^2 l}\right)\right\}. \qquad [22]$$

By applying this formula to all the sides of the triangles, the sum of these projections will give the required length of the total arc.

We have now to determine the astronomical difference of longitude from observation. In the Philosophical Transactions for 1824, an account is given of some experiments performed by Dr. Tiarks, for determining the differences of longitude of Dover and Falmouth. Twenty-four chronometers were transported by sea three several times from the one place to the other, by which means the difference of longitude was determined to be 6° 22′ 6″; and as the length of the parallel found from the survey was 1,474,672 ft., we have the length of a degree of parallel in latitude 50° 44′ 24″, equal to 231,563 ft. The difference of longitude of Marennes and Padua was determined by five signals, at five intermediate stations. The length of the parallel in feet was found, from triangulation, to be 1,010,996 mètres, or 3,316,976 English ft., and the difference of longitude was 12° 59′ 3″·75. This gives for the mean length of a degree in latitude 45° 43′ 12″, found from the whole arc between Marennes and Padua, 255,470 ft.; the length of the degree found from the partial arc between Marennes and Geneva was 255,546 ft. Both these results are greater than a degree in the same parallel of latitude on a regular spheroid, which most nearly represents the meridional arcs; but no great reliance can be placed on these numbers, as the determination of the longitudes was attended with considerable difficulty.

The Figure of the Earth.—If the earth were perfectly fluid, and had no motion of rotation about an axis, it would assume a spherical form; for in this case there would be no tendency in the fluid to run in any direction, and therefore it would be in a state of equilibrium. But if any portion of the surface were farther removed from the centre than the rest, the pressure arising from the protuberant would be greater than that from the less elevated parts, and therefore the equilibrium would be destroyed.

But since the earth revolves on its axis, every particle has a tendency to recede from that axis proportional to its distance; consequently its gravity will be diminished, and the columns of fluid at the equator being composed of parts that are lighter, must be extended in length in order to balance the columns in the direction of the axis. It has been proved by Maclaurin and succeeding writers, that a mass of homogeneous fluid will be in equilibrium if it be formed into an oblate spheroid, such that the polar diameter shall be to the equatorial diameter as the attraction at the equator, diminished by the centrifugal force there, is to the attraction at the pole. And as it appears from experiments on the vibration of pendulums that the centrifugal force is to the force of gravity at the equator as 1 to 289, it may be demonstrated that a homogeneous fluid of the same mean density as the earth would be in equilibrium if the ratio $\frac{a-b}{a} = \frac{5}{4}\frac{1}{289} = \frac{1}{231}$, nearly, a being the equatorial, and b the polar diameter; that is, if $b : a :: 230 : 231$.

If the fluid mass of the earth be supposed not to be homogeneous, but to be formed of strata that increase in density towards its centre, the solid of equilibrium will still be an elliptic spheroid, but less oblate than before. Now, as it appears, from experiments made on the density of the mountain Schehallien, in Scotland, and also from those of Cavendish, that the mean density of the earth is greater than the density at the surface, it follows, that if the earth be a solid of equilibrium, the ratio $\frac{a-b}{b}$ will be less than before, or less than $\frac{1}{230}$.

If the earth were homogeneous, the increase of gravity from the equator to the pole would be $\frac{1}{230}$ G, G being the gravity at the equator; and the gravity g, at any latitude l, would be represented by the equation $g = \text{G}(1 + \frac{1}{230}\sin.^2 l)$. But if the density of the earth increase towards the centre, the ratio $\frac{a-b}{b}$, and the increase of gravity from the equator to the pole, divided by the gravity at the equator (γ), will no longer be expressed by the same fraction, but the sum of the two fractions is constant, and equal to twice the value of $\frac{a-b}{b}$, which the spheroid would have if it were homogeneous, that is,

$$\frac{a-b}{b} + \gamma = \frac{5}{2}\frac{1}{289} \cdot 00865, \text{ and } g = \text{G}(1 + \gamma \sin.^2 l). \qquad 23]$$

This theorem was first given by Clairaut, and is of great importance in determining the figure of the earth from experiments with the pendulum.

With respect to the values given to η, see our article on GUNNERY. We shall now proceed to show how the figure of the earth is to be determined from geodetic operations. We shall, therefore, first consider the different properties of an oblate spheroid, and then compare them with the results deduced from observation.

3234.

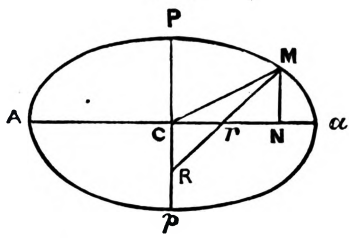

Let A P a p, Fig. 3234, be an ellipse, which, by its revolution about its minor axis P p, generates an oblate spheroid. Let A C = a, C P = b, the eccentricity = $a\,e$, the ordinate M N = y, C N = x, the normal M r = n, M R = N, the radius of curvature at M = ρ, and the latitude of M, or the angle M r a = l. Now, the equation to the ellipse is $a^2 y^2 + b^2 x^2 = a^2 b^2$.

Also $y = n \sin. l$, and $x = \frac{a^2}{b^2} \times \mathrm{N}\,r = \frac{a^2}{b^2} n \cos. l$; $\therefore\ a^2 n^2 \sin.^2 l + \frac{a^2}{b^2} n^2 \cos.^2 l = a^2 b^2$; consequently $n = \frac{b^2}{\sqrt{(a^2 \cos.^2 l + b^2 \sin.^2 l)}}$. And because $b^2 = a^2 (1 - e^2)$, therefore

$$a^2 \cos.^2 l + b^2 \sin.^2 l = a^2 (1 - e^2 \sin.^2 l);$$

hence

$$n = \frac{a(1 - e^2)}{\sqrt{(1 - e^2 \sin.^2 l)}}, \qquad [24]$$

$$x = \frac{a \cos. l}{\sqrt{(1 - e^2 \sin.^2 l)}}, \qquad y = \frac{a(1 - e^2) \sin. l}{\sqrt{(1 - e^2 \sin.^2 l)}}, \qquad [25]$$

$$\frac{x}{\cos. l} = \frac{a}{\sqrt{(1 - e^2 \sin.^2 l)}}, \qquad [26]$$

$$\mathrm{C}\,r = \frac{a e^2 \cos. l}{\sqrt{(1 - e^2 \sin.^2 l)}} = \mathrm{N}\,e^2 \cos. l, \qquad [27]$$

$$\mathrm{C\,R} = \frac{a e^2 \sin. l}{\sqrt{(1 - e^2 \sin.^2 l)}} = \mathrm{N}\,e^2 \sin. l, \qquad [28]$$

$$\mathrm{C\,M} = \sqrt{x^2 + y^2} = a \sqrt{\left(\frac{1 - (2e^2 - e^4) \sin.^2 l}{1 - e^2 \sin.^2 l}\right)}, \qquad [29]$$

$$\rho = \frac{a^2}{b^4} n^3 = \frac{a(1 - e^2)}{(1 - e^2 \sin.^2 l)^{\frac{3}{2}}}. \qquad [30]$$

The lengths of two degrees on the meridian in given latitudes being known from measurement, it is required to determine the polar and equatorial diameters.—Let D, D′, be the lengths of two degrees in feet; l, l', the latitudes of their middle points; ρ, ρ', the radii of curvature at those points; then, since the two arcs are very small compared with their radii, we may suppose them to be arcs of two circles whose radii are ρ, ρ', without sensible error. Hence $180° : 1° :: \pi\rho : \mathrm{D}$;

$$\therefore\ \rho = \frac{180}{\pi} \mathrm{D} = \mu\,\mathrm{D}; \text{ and } \rho' = \mu\,\mathrm{D}',$$

μ being substituted for $\frac{180}{\pi}$. Hence, therefore, expanding the value of ρ, and neglecting higher powers of e than the second, we have, from equation [30],

$$\mathrm{D} = \frac{\rho}{\mu} = \frac{a(1 - e^2)}{\mu} (1 + \tfrac{3}{2} e^2 \sin.^2 l); \qquad [31]$$

$$\mathrm{D}' = \frac{\rho'}{\mu} = \frac{a(1 - e^2)}{\mu} (1 + \tfrac{3}{2} e^2 \sin.^2 l);$$

$$\therefore\ \frac{\mathrm{D}}{\mathrm{D}'} = \frac{1 + \frac{3}{2} e^2 \sin.^2 l}{1 + \frac{3}{2} e^2 \sin.^2 l'} = 1 + \tfrac{3}{2} e^2 \sin.^2 l - \tfrac{3}{2} e^2 \sin.^2 l';$$

$$\therefore\ e^2 = \frac{2}{3} \frac{\mathrm{D} - \mathrm{D}'}{\mathrm{D}'(\sin.^2 l - \sin.^2 l')} = \frac{2}{3} \frac{\mathrm{D} - \mathrm{D}'}{\mathrm{D}' \sin.(l + l') \sin.(l - l')}. \qquad [32]$$

If $l' = 0$, or the degree is at the equator, the length of the degree $\mathrm{D}' = \frac{a(1 - e^2)}{\mu}$. Hence it follows, that the excess of the degrees of the meridian above a degree of the meridian at the equator, is as the square of the sine of latitude.

The length of a degree parallel to the equator, and the length of a degree of the meridian, being known from measurement, to determine the polar and equatorial diameters.—Let Δ be the length of a degree parallel to the equator, at a place whose latitude $= \phi$. Then the radius of this circle $x = \frac{a \cos. l}{\sqrt{(1 - s^2 \sin.^2 l)}}$, equation [25]; therefore $\Delta = \frac{x}{\mu} = \frac{a \cos. l}{\mu \sqrt{(1 - e^2 \sin.^2 l)}}$. Expanding this expression, and neglecting the powers of e higher than the second,

$$\Delta = \frac{a \cos. l}{\mu} (1 + \tfrac{1}{2} e^2 \sin.^2 l). \qquad [33]$$

From this equation, and equation [31], we can determine the values of e^2 and a, when D and Δ are known.

We shall now give some examples of the geodetic measurements which have been executed in our own country and in India. They are part of those which M. Schmidt has selected as the best for the purpose of determining the magnitude and figure of the earth. With these data he has found $a = 20921665$ ft., $b = 20852394$ ft. Ellipticity $= \frac{a - b}{a} = \frac{1}{302 \cdot 03}$. Degree at the equator $= 362732$; degree in latitude $45° = 364543 \cdot 5$.

No.	Country.	Latitude of Middle Points.	Arc measured.	Length in Feet.	Length of a Degree.	Difference.
		° ′ ″	° ′ ″			
1	India	12 32 21	1 34 56·4	574,368	362,988	+ 83
2	„	9 34 43	2 50 10·5	1,029,171	362,863	+ 29
3	„	13 2 54	4 6 11·3	1,489,198	362,873	− 46
4	„	16 34 42	2 57 21·7	1,073,409	363,125	+ 96
5	„	19 34 34	3 2 35·9	1,105,499	363,257	+118
6	„	22 36 32	3 1 19·9	1,097,320	363,084	−184
7	England ..	51 25 18	1 36 20·0	586,319	364,952	+256
8	„	52 50 30	1 14 3·4	450,018	365,036	−411
9	„	54 0 56	1 6 49·7	406,516	365,109	−107

The last column in this Table is the difference between the length of a degree computed with the values of a and b, given above, and the length of a degree given by measurement. These differences must be supposed to arise either from errors in the observations, or from local irregularity of form or density. The most probable source of error is in determining the latitudes; for an error of a single second in the difference of latitude is equivalent to 100 ft. measured on the ground. On this account, the largest arcs may be considered the best; for the probable error is the same, whether the arcs be great or small.

To these examples we may add the results of four arcs of parallel, measured in different countries, and also their errors, compared with the degrees computed from formula [33].

No.	Country.	Latitude.	Measured Degree.	Difference.
		° ′ ″		
1	Mouth of the Rhone..	43 31 50	266,345	+1191
2	Beachy Head to Dunnose	50 44 24	232,331	+ 789
3	Dover to Falmouth	50 44 24	231,579	+ 37
4	Padua to Marennes	45 43 12	255,480	+ 110

To determine the length of any arc of the meridian.—Let the arc a M, Fig. 3234, measured from the equator $= s$, then $ds = \sqrt{dx^2 + dy^2}$, and if we differentiate the values of x and y, given in formula [25], we shall readily find $ds = \frac{a(1 - e^2)\, dl}{(1 - e^2 \sin.^2 l)^{\frac{3}{2}}} = \rho\, dl$. Expanding this expression, and neglecting all powers of e higher than the fourth, we get

$$ds = a\, dl\, (1 - e^2)\, (+ \tfrac{3}{2} e^2 \sin.^2 l + \tfrac{15}{8} e^4 \sin.^4 l);$$

and since $\sin.^2 l = \frac{1}{2}(1 - \cos. 2l)$, $\sin.^4 l = \frac{1}{8}(3 - 4 \cos. 2l + \cos. 4l)$, this equation becomes $ds = a\, dl\, (1 - e^2)\, (A - B \cos. 2l + C \cos. 4l)$, where

$$A = 1 + \tfrac{3}{4} e^2 + \tfrac{45}{64} e^4, \quad B = \tfrac{3}{4} e^2 + \tfrac{15}{16} e^4, \quad C = \tfrac{15}{64} e^4.$$

And integrating

$$s = a(1 - e^2)\, (A l - \tfrac{1}{2} B \sin. 2l + \tfrac{1}{4} C \sin. 4l). \qquad [34]$$

No constant is necessary, because at the equator s and l vanish together.

The lengths of any two arcs of the meridian being given from measurement, to determine the polar and equatorial diameters.—If l and l' be the latitudes of the two extremities of the first arc, and s, s', their distances measured from the equator, then we have, from equation [34],

$$s = a\,(1 - e^2)\, (A\, l - \tfrac{1}{2} B \sin. 2l + \tfrac{1}{4} C \sin. 4l),$$
$$s' = a\,(1 - e^2)\, (A\, l' - \tfrac{1}{2} B \sin. 2l' + \tfrac{1}{4} C \sin. 4l').$$

Taking the difference of these equations, and putting $s - s' = \mathrm{S}$, $l - l' = \lambda$, $l + l' = \mathrm{L}$, we have, from Trigonometry, $\mathrm{S} = a(1 - e^2)(\mathrm{A}\lambda - \mathrm{B}\sin.\lambda\cos.\mathrm{L} + \frac{1}{2}\mathrm{C}\sin.2\lambda\cos.2\mathrm{L})$. In like manner we have, for the second arc,

$$\mathrm{S}' = a(1 - e^2)(\mathrm{A}\lambda' - \mathrm{B}\sin.\lambda'\cos.\mathrm{L}' + \tfrac{1}{2}\mathrm{C}\sin.2\lambda'\cos.2\mathrm{L}');$$

and since, in these two equations, the values of S, λ, L, S', λ', L', are all known from observation, the quantities a and e can easily be found, and the polar radius b from the expression $b = a\sqrt{(1 - e^2)}$.

If $b = a(1 - \alpha)$, the small fraction α is called the *ellipticity* of the spheroid. Hence

$$a(1 - \alpha) = a\sqrt{(1 - e^2)} = a(1 - \tfrac{1}{2}e^2 - \tfrac{1}{8}e^4);$$

$$\therefore\quad \alpha = \tfrac{1}{2}e^2 + \tfrac{1}{8}e^4. \qquad [35]$$

If Q be put for the elliptic quadrant, measured from the equator to the pole, we have $l = \frac{1}{2}\pi$ in equation [34]; therefore

$$\mathrm{Q} = \tfrac{1}{2}a(1 - e^2)\mathrm{A}\pi = \tfrac{1}{2}\pi a(1 - \tfrac{1}{4}e^2 - \tfrac{3}{64}e^4). \qquad [36]$$

If the earth be cut by a vertical plane perpendicular to the meridian, the radius of curvature of this section, at the point where it cuts the meridian, is equal to the normal M R, Fig. 3234.—For, since the earth is supposed to be a solid of revolution, the direction of gravity always passes through the axis of the earth. If therefore we conceive the plumb line to be carried over an indefinitely small arc perpendicular to the meridian, its direction will intersect the axis at the same point R as before; and therefore R is the centre, and M R the radius of curvature of this arc. The value of M R is given in formula [26].

To find the radius of the curvature at any place, when the earth is cut by a vertical plane making an angle θ with the meridian.—Let P A p, Fig. 3235, be an oblate spheroid, formed by the revolution of the ellipse P A p about its minor axis P p. Let P M A be the meridian of the given place M, M N m any section passing through the normal M r, making an angle θ with the meridian; then it is required to find the radius of curvature of the section M N m at the point M.

3235.

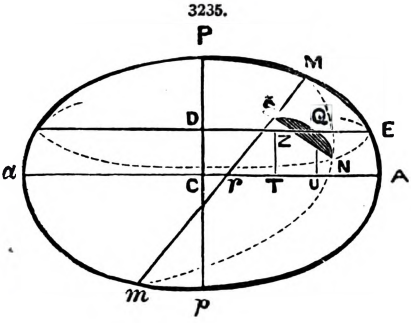

From any point N in the arc M N m draw N S perpendicular to M m, and S Q also perpendicular to M m in the plane P A p. Let the plane N S Q cut the plane D N E drawn through N, parallel to the equator in the line Q N. Because M S is perpendicular to S N and S Q, it is perpendicular to the plane N S Q, and therefore the plane M A m passing through M S is perpendicular to the plane N S Q. And because the planes N S Q, D E N, are perpendicular to the plane M A m, their common intersection Q N is perpendicular to this plane; therefore N Q S, N Q D, are right angles. Let $r\mathrm{S} = x$, $\mathrm{S N} = y$, $\angle \mathrm{N S Q} = \mathrm{A M N} = \theta$, $\angle \mathrm{S}r\mathrm{A} = \mathrm{Q S Z} = l$, then will

$$\mathrm{S Q} = y\cos.\theta,\ \mathrm{S Z} = \mathrm{S Q}\cos.\mathrm{Q S Z} = y\cos.\theta\cos.l,\ \mathrm{Q Z} = \mathrm{S Q}\sin.\mathrm{Q S Z} = y\cos.\theta\sin.l.$$

And because D E = D N, we have from the ellipse

$$a^2b^2 = a^2 \cdot \mathrm{CD}^2 + b^2 \cdot \mathrm{DE}^2 = a^2 \cdot \mathrm{CD}^2 + b^2(\mathrm{DQ}^2 + \mathrm{QN}^2). \qquad [\alpha]$$

But

$$\mathrm{CD} = \mathrm{ST} - \mathrm{SZ} = x\sin.l - y\cos.\theta\cos.l.$$
$$\mathrm{DQ} = \mathrm{C}r + r\mathrm{T} + \mathrm{TU} = c + x\cos.l + y\cos.\theta\sin.l.$$
$$\mathrm{QN} = y\sin.\theta.$$

Making these substitutions in equation [α], it will be of the form

$$\mathrm{A}x^2 + \mathrm{B}xy + \mathrm{C}y^2 + \mathrm{D}x + \mathrm{E}y + \mathrm{F} = 0, \qquad [37]$$

where

$$\mathrm{A} = a^2\sin.^2 l + b^2\cos.^2 l. \qquad \mathrm{D} = 2b^2c\cos.l.$$
$$\mathrm{B} = -2(a^2 - b^2)\sin.l\cos.l\cos.\theta. \qquad \mathrm{E} = 2b^2c\cos.\theta\sin.l.$$
$$\mathrm{C} = b^2 + (a^2 - b^2)\cos.^2 l\cos.^2\theta. \qquad \mathrm{F} = -(a^2 - c^2)b^2.$$

This is the equation to the ellipse, and we shall find the radius of curvature from the expression $\rho = \dfrac{ds^3}{d^2x\,dy}$, dy being considered constant. Now, at the point M, $x = n$, $y = 0$, $\dfrac{dx}{dy} = 0$, $\dfrac{ds}{dy} = -1$; therefore $\rho = -\dfrac{dy^2}{d^2x}$. Hence, differentiating equation [37] twice, we have

$$2\mathrm{A}x\frac{dx}{dy} + \mathrm{B}y\frac{dx}{dy} + \mathrm{B}x + 2\mathrm{C}y + \mathrm{D}\frac{dx}{dy} + \mathrm{E} = 0,$$

$$2\mathrm{A}x\frac{d^2x}{dy^2} + 2\mathrm{A}\frac{dx^2}{dy^2} + \mathrm{B}y\frac{d^2x}{dy^2} + 2\mathrm{B}\frac{dx}{dy} + 2\mathrm{C} + \mathrm{D}\frac{d^2x}{dy^2} = 0;$$

and because $\frac{dx}{dy} = 0$, $y = 0$, we get $-\frac{d^2x}{dy^2} = \frac{2C}{2Ax+D}$ and $\rho = \frac{2Ax+D}{2C}$; and since

$$A = a^2 \sin.^2 l + b^2 \cos.^2 l = a^2 (1 - e^2 \cos.^2 l),$$

$$x = Mr = \frac{a(1-e^2)}{\sqrt{(1-e^2 \sin.^2 l)}}, \quad b^2 = a^2(1-e^2), \; c = \frac{a e^2 \cos. l}{\sqrt{(1-e^2 \sin.^2 l)}};$$

$$\therefore \; 2Ax + D = \frac{2a^3(1-e^2)}{\sqrt{(1-e^2 \sin.^2 l)}},$$

and $C = b^2 + (a^2 - b^2) \cos.^2 \theta \cos.^2 l = a^2 (1 - e^2 + e^2 \cos.^2 \theta \cos.^2 l)$;

$$\therefore \; \rho = \frac{a(1-e^2)}{\sqrt{1-e^2 \sin.^2 l}\,(1 - e^2 + e^2 \cos.^2 \theta \cos.^2 l)}. \qquad [38]$$

Cor. Because
$$1 - e^2 + e^2 \cos.^2 \theta \cos.^2 l$$
$$= (1-e^2)(\sin.^2 \theta + \cos.^2 \theta) + e^2 \cos.^2 \theta \cos.^2 l$$
$$= (1-e^2) \sin.^2 \theta + (1 - e^2 \sin.^2 l) \cos.^2 \theta,$$

We obtain from formula [38], $\frac{1}{\rho} = \frac{\sqrt{(1-e^2 \sin.^2 l)}}{a(1-e^2)} [(1-e^2) \sin.^2 \theta + (1 - e^2 \sin.^2 l) \cos.^2 \theta]$.

And if r be the radius of curvature of the meridian at the point M, and r' the radius of curvature of a section perpendicular to the meridian, we have

$$r = \frac{a(1-e^2)}{(1-e^2 \sin.^2 l)^{\frac{3}{2}}}, \qquad r' = \frac{a}{\sqrt{(1-e^2 \sin.^2 l)}}.$$

Hence it follows that $\frac{1}{\rho} = \frac{\sin.^2 \theta}{r'} + \frac{\cos.^2 \theta}{r} = \frac{r \sin.^2 \theta + r' \cos.^2 \theta}{r r'}$;

$$\therefore \; \rho = \frac{r r'}{r \sin.^2 \theta + r' \cos.^2 \theta}, \qquad [39]$$

an elegant expression, first given by Oliver Byrne, which may be proved by the differential calculus to be true of all surfaces, when r and r' are the radii of greatest and least curvature of all sections passing through the normal at the point M.

To determine the figure of the earth from the vibration of pendulums.—This method, which is now very generally practised on account of its great facility, may be thus briefly explained. It appears from Mechanics that the time of vibration of a simple pendulum in a vacuum, when the arcs are indefinitely small, is determined by the equation $t = \pi \sqrt{\frac{L}{g}}$. If, therefore, t and L be given, the value of g may easily be found. Let G represent the force of gravity at the equator, and g the force of gravity in any latitude l; then we have from Clairaut's theorem,

$$\frac{a-b}{b} + \gamma = \frac{5}{2} \cdot \frac{1}{289}; \text{ and } g = G(1 + \gamma \sin.^2 l). \qquad [23]$$

Suppose now that a *pendulum*, of either of the forms described, is made to vibrate, and its vibrations are compared with those of the *pendulum* of a clock, as explained in the article PENDULUM, then if n be the number of vibrations which the clock pendulum makes between two successive coincidences, the experimental pendulum will make $n \pm 2$ vibrations. Let τ be the rate of the clock in seconds, or its gain in twenty-four hours, then the number of vibrations which the clock makes in a day is $24 \times 60 \times 60 + \tau = 86400 + \tau$. If therefore N be the number of vibrations made by the experimental pendulum in a day, we have, manifestly, $n : n \pm 2 :: 86400 + \tau : N$; therefore

$$N = \frac{n \pm 2}{n}(86400 + \tau) = 86400 + \tau \pm \frac{172800 + 2\tau}{n}. \qquad [40]$$

Let N′ be the number of vibrations which the same pendulum makes in any other latitude " and g' the force of gravity at this place. We have then

$$\frac{N^2}{N'^2} = \frac{g}{g'} = \frac{G(1 + \gamma \sin.^2 l)}{G(1 + \gamma \sin.^2 l')} = 1 + \gamma(\sin.^2 l - \sin.^2 l'),$$

nearly, γ being a very small quantity; therefore

$$\gamma = \frac{N^2 - N'^2}{N'^2(\sin.^2 l - \sin.^2 l')} \qquad [41]$$

The value of γ being determined in this manner from experiment, the ratio of a to b will be found from the first of equations [23].

In this investigation several corrections have been omitted which must be taken into consideration when great accuracy is required.

(1). *Correction for the amplitude of the arc of vibration.*—In the expression given for the time of vibration (see PENDULUM), the arc is supposed to be indefinitely small. Let t be the observed time of vibration, ϕ the amplitude or semiarc of vibration, and t_1 the time of vibration, when the arc is indefinitely small; then we have $t = \pi \sqrt{\frac{L}{g}\left(1 + \frac{\phi^2}{16}\right)} = t_1\left(1 + \frac{\phi^2}{16}\right)$. Hence if N be the observed number of vibrations made in a day, and N_1 the number in an indefinitely small arc, $\phi\, N_1\, t_1 = 24$ hours $= N\, t$, therefore

$$N_1 = N\,\frac{t}{t_1} = N\left(1 + \frac{\phi^2}{16}\right). \qquad [42]$$

If therefore ϕ remains nearly constant during the time of observation, the number of vibrations N must be multiplied by the quantity $1 + \frac{1}{16}\phi^2$. But as the amplitude is continually diminishing on account of friction and the resistance of the air, it is necessary to make an allowance for this change. Now it is proved, both by theory and experiment, that the arcs decrease very nearly in geometrical progression. Let therefore ϕ be the first arc, ϕ' the last, and m the number of terms, which is always a very large number. Also, let q be the ratio of the square of each arc to the square of the preceding arc; then the whole time of vibration will be represented by the equation

$$T = \pi \sqrt{\frac{L}{g}}\left\{m + \frac{\phi^2}{16}(1 + q^2 + q^4 \ldots . + q^{m-1})\right\}$$

$$= \pi \sqrt{\frac{L}{g}}\left(m + \frac{\phi^2}{16}\,\frac{1 - q^m}{1 - q}\right).$$

Let $q = 1 - x$, then x is a very small quantity, and

$$\log.(1 - x) = M\,(-x - \tfrac{1}{2}x^2 - \&c.) = -M\,x, \text{ nearly},$$

M being the modulus in the common system of logarithms; hence

$$x = -\frac{\log.(1 - x)}{M}, \quad \text{or, } 1 - q = -\frac{\log. q}{M};$$

and since $q^{m-1}\,\phi^2 = \phi'^2$, we have

$$-\log. q = \frac{2\log.\phi - 2\log.\phi'}{m - 1} = \frac{2(\log.\phi - \log.\phi')}{m}, \text{ nearly};$$

$$\therefore\ 1 - q = \frac{2(\log.\phi - \log.\phi')}{M\,m}.$$

Also, $$\phi^2(1 - q^m) = \phi^2 - q\,\phi'^2 = \phi^2 - \phi'^2, \text{ very nearly.}$$

Making these substitutions in the expression for T given above, we have

$$T = \pi \sqrt{\frac{L}{g}}\left\{m + \frac{M\,m}{32}\,\frac{\phi^2 - \phi'^2}{\log.\phi - \log.\phi'}\right\},$$

and therefore the mean time of one vibration is

$$t = \pi \sqrt{\frac{L}{g}}\left(1 + \frac{M}{32}\,\frac{\phi^2 - \phi'^2}{\log.\phi - \log.\phi'}\right), \text{ or } t = t_1\left(1 + \frac{M}{32}\,\frac{\phi^2 - \phi'^2}{\log.\phi - \log.\phi'}\right).$$

Hence if ν_1 be the correction to be added to the observed number of vibrations N in a day, we manifestly have

$$\nu_1 = N\,\frac{M\,\sin.^2 1^\circ}{32}\,\frac{\phi^2 - \phi'^2}{\log.\phi - \log.\phi'}, \qquad [43]$$

the arcs ϕ and ϕ' being estimated in degrees.

(2). *Correction for temperature.*—When a pendulum is made to vibrate at different times, its length will vary with the temperature, and therefore the time of vibration will also vary; hence it is necessary to reduce the number of vibrations to a given standard (62°). Let T be the mean height of all the thermometers employed during the experiments, and e the rate of expansion of the metal for 1° of Fahrenheit, then if L, L′, be the lengths of the pendulum at the temperature of T°, and 62°, and N, N_2, be the corresponding numbers of vibrations in a day, we shall have $L = L'\,[1 + e\,(T^\circ - 62^\circ)]$, and consequently

$$\frac{N_2}{N} = \sqrt{\frac{L}{L'}} = \sqrt{1 + e\,(T - 62)} = 1 + \tfrac{1}{2}\,e\,(T^\circ - 62^\circ), \text{ nearly.}$$

Hence if ν_2 be the correction to be added on account of the increase of temperature,

$$\nu_2 = \tfrac{1}{2}\,N\,e\,(T^\circ - 62^\circ). \qquad [44]$$

(3). *Correction for the buoyancy of the atmosphere.*—When a body moves in a fluid its weight is diminished by the weight of an equal bulk of fluid, and therefore the accelerating force is diminished in the same proportion. Let N be the number of vibrations made in a day in air, N_3 ditto in

a vacuum; g the force of gravity in air, g' ditto in a vacuum; σ the specific gravity of air, S that of the pendulum during the experiments; then

$$\frac{g'}{g} = \frac{S}{S-\sigma} = \left(1 + \frac{\sigma}{S-\sigma}\right), \text{ also } \frac{N_3}{N} = \sqrt{\frac{g'}{g}} = \sqrt{\left(1 + \frac{\sigma}{S-\sigma}\right)} = 1 + \tfrac{1}{2}\frac{\sigma}{S-\sigma}, \text{ nearly.}$$

Let h be the height of the barometer, and T the temperature of the air during the experiments; also let σ' be the specific gravity of the air at the temperature of 32°, when the barometer stands at a given altitude H, and h' the height of the same weight of mercury reduced to the temperature T. It appears, then, from hydrostatics that the specific gravity of the air

$$= \frac{p}{k\,[1 + \alpha\,(T° - 32°)]},$$

when p is the pressure on a unit of surface, α is the expansion of air for 1° of temperature, and k is a constant quantity; hence $\sigma : \sigma' :: \frac{h}{1 + \alpha\,(T° - 32°)} : h'$. Also, if μ be the expansion of mercury for 1° of temperature, $h' = H\,[1 + \mu\,(T° - 32°)]$. Substituting this value of h' in the proportion above, and forming an equation, we get $\sigma = \sigma' \frac{h}{H} \frac{1}{1 + (\alpha + \mu)\,(T° - 32°)}$, very nearly.

According to MM. Arago and Biot, when $H = 29{\cdot}9218$, and the temperature is 32°, σ' is equal to $\frac{1}{770}$, therefore $\frac{1}{2}\frac{\sigma'}{H} = {\cdot}0000217$. Also, $\alpha = \frac{1}{450} = {\cdot}00222$, $\mu = {\cdot}0001$, and therefore $\alpha + \mu = {\cdot}0023$. Hence $\frac{1}{2}\sigma = \frac{{\cdot}0000217}{1 + {\cdot}0023\,(T - 32)}$, and $\frac{N_3}{N} = 1 + \frac{{\cdot}0000217\,h}{(S-\sigma)\,[1 + {\cdot}0023\,(T° - 32°)]}$; or if we put $\frac{1}{770}$ ($= {\cdot}0013$) for σ in the denominator, we shall have, for the correction to be added to N,

$$\nu_3 = N\,\frac{{\cdot}0000217}{S - {\cdot}0013}\,\frac{h}{1 + {\cdot}0023\,(T° - 32°)}. \qquad [45]$$

See ALGEBRAIC SIGNS. BAROMETER. DISTANCES. GRAVITY. GUNNERY. PENDULUM. SURVEYING. THERMOMETER.

Works relating to Geodesy:—Delambre et Legendre, 'Méthode Analytique pour la Détermination d'un Arc du Méridien,' 4to, Paris, 1798. 'Mudge and Dalby's Account of the Operations for Conducting a Trigonometrical Survey of England and Wales,' 3 vols., 4to, 1799. Benoit, 'Cours complet de Topographie et de Géodésie,' 8vo, Paris, 1825. Salneuve, 'Cours de Topographie et de Géodésie,' 8vo, 1841. Puissant, 'Traité de Géodésie,' 2 vols., 4to, Paris, 1842. J. B. Williams, 'Practical Geodesy,' 8vo, 1846. G. Everest, 'Measurement of the Meridional Arc of India,' 2 vols., 4to, 1847. Captain Yolland, 'An Account of the Measurement of the Lough Foyle Base, Ireland,' 4to, 1847. Clark and James, 'Account of the Ordnance Survey of Great Britain and Ireland,' 2 vols., 4to, cloth, 1858. Sir H. James, 'Abstracts of the Principal Lines of Spirit Levelling in England, Wales, and Scotland, 4 vols., 4to, 1861. Colonel Frome, 'Outline of a Method of Conducting a Trigonometrical Survey,' 8vo, 1862. Sir H. James, 'Extension of the Triangulation of the Ordnance Survey into France and Belgium,' 4to, 1863. Borda, 'Description et Usage du Circle de Réflexions,' Paris, 4to. 'How to Measure the Earth, with the assistance of Railways,' by Oliver Byrne, the editor of this Dictionary.

GERMAN SILVER. FR., *Argentan*; GER., *Neusilber*; ITAL., *Packfong*; SPAN., *Plata alemana*. See ALLOYS.

GIMBALS. FR., *Balanciers du compas ou de la lampe*; GER., *Bügel des Compasses order des Nachthauses*; ITAL., *Snodo universale*; SPAN., *Aparato de suspension*.

A *gimbals*, Fig. 3236, is a contrivance for securing free motion in suspension, or for suspending anything, as a chronometer, ship's compass, marine barometer, &c., so that it may keep a constant position, or remain in equilibrium unaffected by the motion of connected bodies, or by the motion of a ship. It consists of a ring Fig. 3236, within which the suspended body turns on an axis through the diameter, while the ring itself turns on another axis at right angles to the first, by means of pivots resting on an outer ring or other means of support. See COMPASS.

3236.

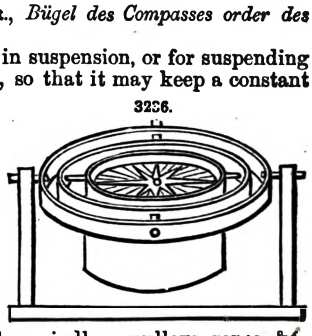

GIN. FR., *Manége à malettes*; GER., *Pferdegöpel*; SPAN., *Manija*.

A gin is a machine or instrument by which the mechanical powers are employed in aid of human strength; especially a machine consisting of a tripod formed of poles united at the top, one of them being longer than the rest and called the *pry-pole*, with a windlass, pulleys, ropes, &c., for raising or moving heavy weights, lifting ore from mines, hauling cannon, and like purposes.

A *gin* is also a machine for separating the seeds from cotton, called hence a *cotton gin*.

GIN, CARPENTRY. FR., *Chêvre*; GER., *Hebezeug*; ITAL., *Capra*; SPAN., *Cábria de carpinteros*, or *Borriquete*.

See LIFTS, HOISTS, and ELEVATORS.

GIN, COTTON GIN. FR., *Machine égreneuse*; GER., *Egrenirmaschine*; ITAL., *Sgranatore*; SPAN., *Máquina para desmotar el algodon*.

See COTTON MACHINERY. GIN.

GLAND, OF A STUFFING BOX. FR., *Chapeau d'une boîte à etoupes, Couronne de la presse-étoupe*; GER., *Stopfbüchse*; SPAN., *Sombrerete de una caja de estopas*.

A gland is the cover of a stuffing box; sometimes called a follower. A cross-piece or clutch for engaging and disengaging machinery moved by belts or bands is also called a *gland*.

GLASS FURNACE. Fr., *Four de verrerie;* Ger., *Glasofen;* Ital., *Vetriera;* Span., *Horno de vidrio.*

See Glass Machinery.

GLASS MACHINERY. Fr., *Machines de verrerie;* Ger., *Maschinen zur Anfertigung des Glases;* Ital., *Macchine da lavorare il vetro;* Span., *Maquinaria para la fabricacion de vidrio.*

Machinery for the Manufacture of Plate Glass.—G. H. Daglish, in the P. I. M. E., 1863, observed that within the last ten years the production of plate glass in England has been quadrupled, whilst in the same time the price has been diminished fully one-half. The present extent of the manufacture in this country is about 85,000 sq. ft. per week, whilst about 12,000 sq. ft. per week of foreign plate glass is imported. The foreign glass has obtained a preference from its superior lightness of colour, which arises from the greater purity of the materials that it is made of, particularly with regard to the sand, of which the foreign makers have an abundant supply, of great purity and light colour.

Under the influence of competition, the English manufacturers have lately commenced an extensive course of experiments with the view of improving the quality of the plate glass made in this country, and also reducing the cost of manufacture; and in some instances very decided success has thus far been the result. In order to accomplish these objects, the sand employed at the British Plate-Glass Works at Ravenhead, near St. Helen's, is now imported from France; and every precaution is adopted to ensure as far as possible the chemical purity of the other ingredients of the glass. Under these altered circumstances the glass now manufactured is equal in every respect to the best samples of the French production.

After the materials have undergone the process of melting in the furnace and are considered in a fit state for casting, the pot containing the melted mass is taken to the casting table, and its contents poured out on one end of the table, in front of a large cast-iron roller; the material is then spread over the surface of the table by passing the roller over it, the thickness of the plate of glass being regulated by strips of iron placed along each side of the table, on which the ends of the roller run. As soon as the plate of glass is sufficiently solidified to bear removal, it is introduced into an annealing oven, there to be gradually reduced in temperature or annealed, until it is fit to be exposed to the atmosphere without risk of fracture. This process of annealing used formerly to occupy upwards of a fortnight, but from the improved arrangement and construction of the annealing oven it is now completed in four days; thus three times the quantity of glass can now be annealed in each oven compared with what was formerly considered possible; and consequently a large outlay in building and in space has been saved, since only one layer of plates can be placed in the oven at one time, no method of piling the plates being considered practicable or even safe. The chemical difficulties and manipulation in producing the raw material have thus been very satisfactorily overcome; but the problem of carrying out the necessary improvements in the subsequent mechanical operations has not perhaps been so completely solved.

The plates of glass when taken from the annealing ovens are exceedingly irregular, particularly on the surface which has been uppermost in the process of casting, that surface being undulated or wavy after the passage of the roller over it whilst in a semi-fluid state; the lower side too is affected by any irregularities on the surface of the casting table, and also to some extent by the floor of the annealing oven; and both sides of the plates are also covered with a hard skin, semi-opaque. The plates vary in size, the largest being about 17 ft. long by 9½ ft. wide; and the thickness varies according to the size from $\frac{3}{8}$ to $\frac{5}{8}$ in. The first process to which the plates are submitted is that of grinding, to take off the hard skin and reduce the surface to a uniform plane, which is performed by the application of sand and water. The second process is that of smoothing, which is a continuation of the first process, but performed with emery of seven different degrees of fineness, so as to prepare the surface of the glass for the final process of polishing. This last process is effected by the use of oxide of iron employed in a moist state.

The machine in general use for grinding is that which was originally employed at the commencement of the glass manufacture, and is believed to have been designed by James Watt. It is known by the name of the fly-frame machine, and is shown in side elevation and plan in Figs. 3237, 3238. It consists of two benches of stone A A, sufficiently large to hold a plate of glass, and placed about 12 ft. apart: on these benches the plates of glass are fixed by plaster of Paris, as shown by the black line in Fig. 3237. Each bench has a runner-frame B made of wood, about 8 ft. long by 4½ ft. wide, shod on the under-side with plates of iron about 4 in. broad and ¼ in. thick, and provided with a strong wrought-iron stud on the upper side, by which it is moved about over the surface of the glass. The gearing for driving these two runner-frames B is placed between the two benches, and consists of the square cast-iron fly-frame C, with two flat bars D hinged to it on opposite sides, extending over each bench A, and suspended from the roof by long chains, as shown by the dotted lines in Fig. 3237, so as to allow them to radiate freely in every direction; this is called the fly-frame from the peculiar motion given to it, and each of the runner-frames is connected to it by the central stud B, Fig. 3237, working loosely in the slot between the bars D. The fly-frame receives its motion from an upright spindle E, which is driven from the main line of shafting by a pair of bevel-wheels with a friction clutch for throwing in and out of gear. On the top of the spindle E is a wrought-iron arm or crank carrying a movable stud, which works in a bush in the centre of the fly-frame C. Round the centre spindle E are also four other spindles F, equidistant from the centre spindle and from one another, each carrying on the top a wrought-iron arm or crank with movable stud similar to the centre one; these studs severally work in bushes at each corner of the fly-frame. Hence when motion is given to the centre spindle E, the fly-frame C is carried round by the stud on the crank-arm, while its sides are always kept parallel to their original position by the four corner cranks F. The two runner-frames B, being connected by their central stud to the arms D of the fly-frame, receive the same circular motion as the fly-frame; but at the same time they are left free to revolve round their own centres, which they do in a greater or less degree according to the varying friction of the grinding surfaces. The grinding

motion being thus obtained, sand and water are constantly applied, until the surface of the glass is found upon examination to be free from all defects; the sand is then washed off the glass, and the first stage of the smoothing process is commenced on the same machine by substituting the coarser qualities of emery in place of the sand. The plate of glass is then removed from the bench, turned over, and replaced on the bench, and submitted to the same process on the other side. The speed at which the fly-frame is driven is about forty revolutions per minute. It will be seen that the runner-frame B, Fig. 3238, is not sufficiently large to act upon the entire surface of a large plate of glass at one time; it is therefore necessary to divide the operation and shift the position of the runner-frame as the work requires it, by inserting the centre stud of the runner-frame into a different portion of the slot between the fly-frame bars D.

3237.

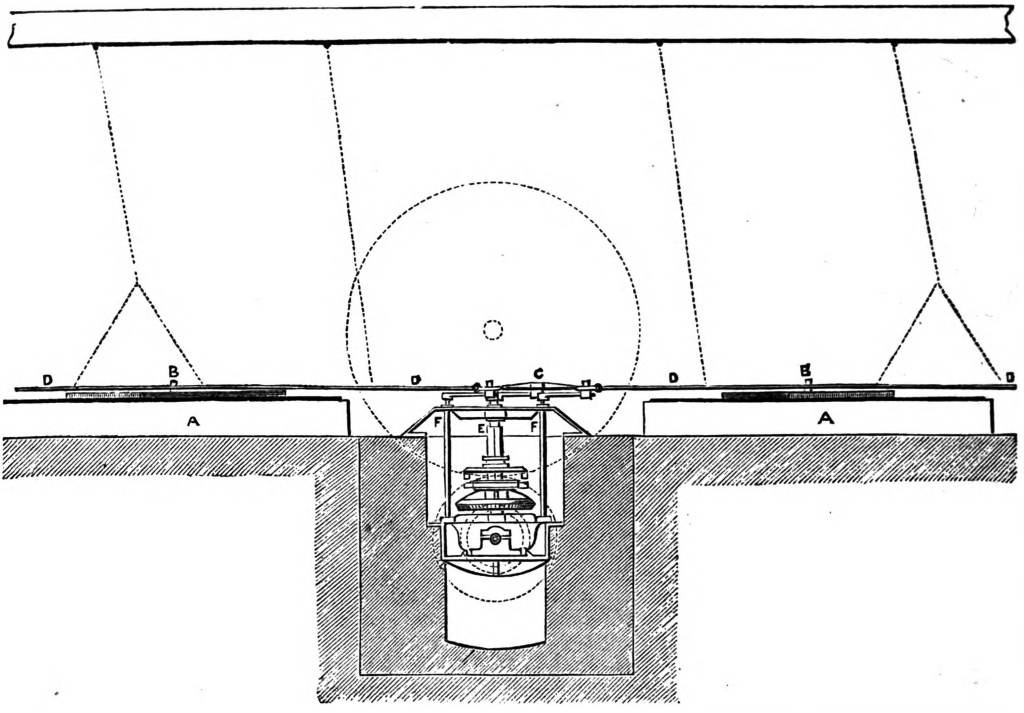

3238.

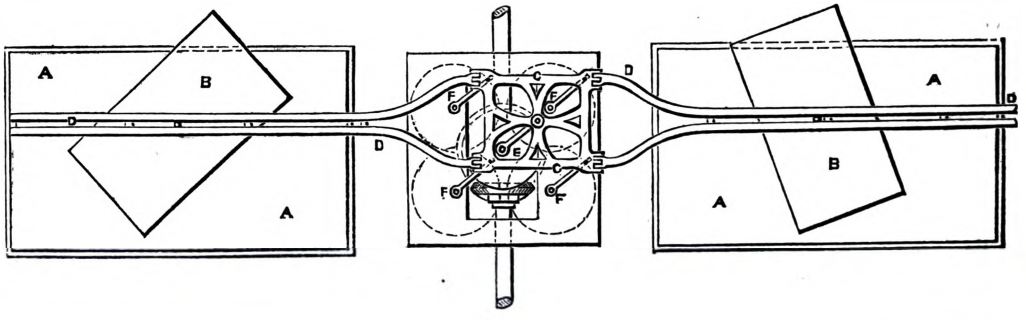

Until the last few years the principal part of the operation of smoothing was effected by manual labour, the operation being performed by rubbing two pieces of glass together, and applying emery powder between them. Great care is requisite as the work approaches completion that no scratching shall take place; and it is on this account that hand labour is considered absolutely necessary for finishing the process, the slightest scratch being immediately felt by a practised hand, whilst a single stray particle of grit on a machine would spoil the whole surface before it was perceived. About 1857 Crossley introduced a machine for smoothing the plates of glass, which so far succeeded that the nicety of the hand touch is only required for the final part of the operation. This smoothing machine, shown in plan in Fig. 3239, is exceedingly simple and inexpensive, consisting of a long wooden bar C, connected at one end to a crank E on an upright spindle, and extending over the stone bench A, on which the plate of glass is laid; two runner-frames B of wood are attached to the bar C, and on the under-side of each frame is fixed another plate of glass: these are then laid upon the glass on the bench. In this case the runner-frames B

are only allowed to partake of the motion given to them by the bar, and are not left free to revolve round their own centres as in the grinding operation previously described. The centre of the bar C between the two runner-frames is kept in position by a radius rod G secured to a fixed bracket on one side of the bench, at right angles to the direction of the bar. The crank E being set in motion, the bar and runner-frames receive a movement somewhat similar to the figure 8, which is very similar to the motion given in manual labour. One advantage of this machine is that two surfaces of glass are finished at one operation. The space between the two runner-frames B is found very convenient for applying the emery, and also ascertaining the progress of the work, without having to stop the machine.

3239.

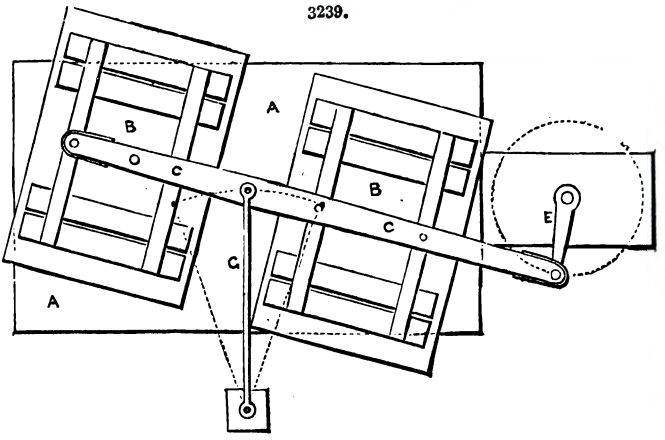

The machinery used in the polishing process remains the same in principle as that originally constructed for the purpose. Each machine consists of a strong cast-iron frame H, Figs. 3240, 2341, about 18 ft. long by 10 ft. wide, containing a series of small rollers, upon which is placed a

3240.

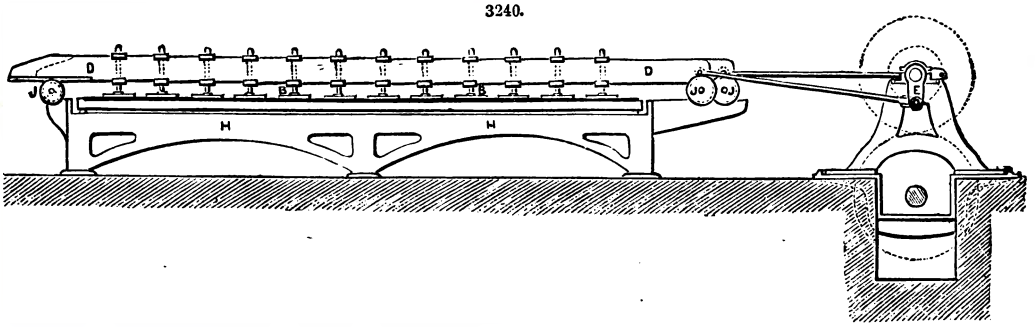

3241.

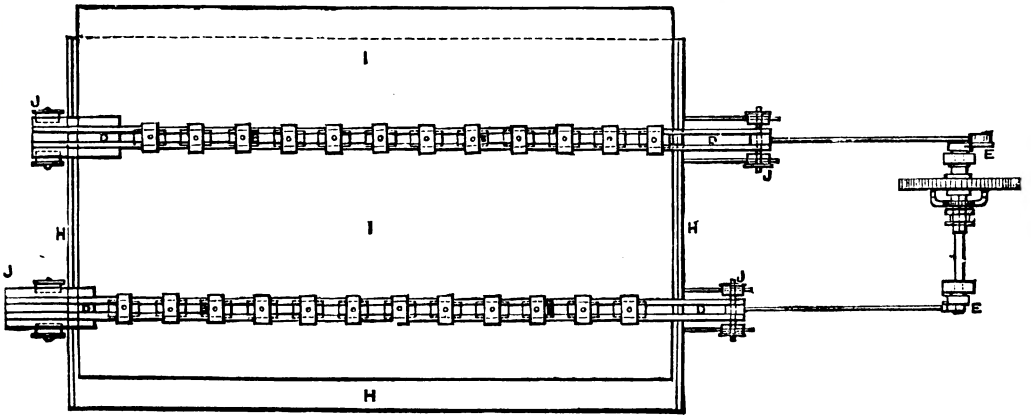

wooden table I, with two racks on the under-side; suitable gearing is connected to these racks, to give the table a slow alternate lateral motion so as to bring every part of the plate of glass under the action of the rubbers B. The plates of glass are fixed upon the table I by plaster of Paris, and the ends of the table move between slide-blocks secured to the main frame H, so as to prevent the action of the rubbers from displacing it. The rubber-blocks B are pieces of wood covered with felt, and provided with a central spindle and adjustable weights to regulate the amount of friction. A number of these blocks are secured to two movable bars D, running on rollers J J at each end of the table I, and driven by a short shaft E, with cranks at the ends set at right angles to each other. The rubber-blocks are thus worked transversely to the motion of the table; and by applying the polishing powder in a liquid state the surface of the glass is gradually brought up to the requisite degree of polish, both sides of the plate successively being subjected to the same operation.

About 1857 experiments were commenced at the British Plate-Glass Works at Ravenhead, with an entirely different class of machinery for grinding and smoothing plate glass, with the object of increasing the production, reducing the cost, and also completing the process of smoothing upon the same machine on which the glass is ground, so as to obviate the necessity of a separate machine for smoothing, and also save the expense and loss of time in removing and refixing the plates of glass. The new grinding and smoothing machine is shown in Figs. 3242, 3243, and consists of a revolving table K, 20 ft. diameter, fixed upon a strong cast-iron spindle L, and running at an average speed of twenty-five revolutions per minute, driven through an intermediate upright shaft M, from the main line of shafting N, by a pair of bevel-wheels, and friction cone O for throwing in and out of gear. This arrangement of gearing for driving the table was made by G. H. Daglish, and was adopted in order to obtain a long spindle L for the table, of a length equal to the semi-diameter of the table, and at the same time to keep the main line of shafting N continuous, for driving a series of tables in one room. Over the top of the table a strong timber bar P is fixed, about 10 in. from its surface; and on the two opposite sides of this bar are bolted two notched plates of cast iron, Q, one on each side of the centre of the table. The notches are for receiving the centre studs of the runner-frames B, which are very similar to those used on the old class of machinery; and the runners can thus readily be moved nearer to or farther from the centre of the table, as circumstances require, by shifting the stud into a different notch. The only motion which these runner-frames have is round their own centres, and this is given to them by the excess of friction on the side farthest from the centre of the table over that on the side nearest to the centre, this excess being caused by the greater velocity of the portion of the table farther from the centre. It is evident that the amount of grinding action is considerably greater on this machine than upon the old one, both from the increased velocity of the runner-frames themselves, and also from the double amount of movement obtained by the revolution of the table K and the runner-frames B. The idea of driving the runner-frames themselves, as well as the table, was conceived at an early stage of the experiments; but on being put to the test, it was found that the unaided movement of the runner-frames adapted itself to the work to be performed far better than any compulsory motion could do. It has also the advantage of leaving the surface of the table free and unencumbered with any machinery, and consequently facilitates the operation of laying and removing the plates of glass: the whole of the driving machinery is also covered over, and thus protected from the injurious effects of the sand and water thrown off from the edge of the table in working.

3242.

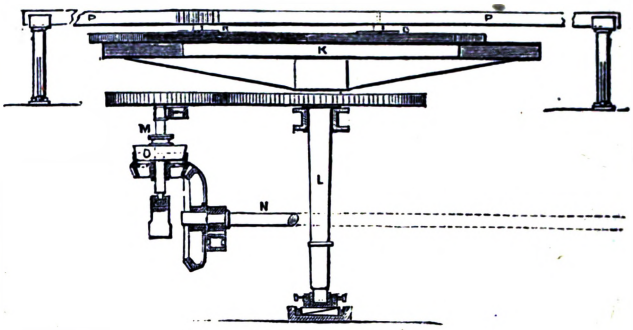

3243.

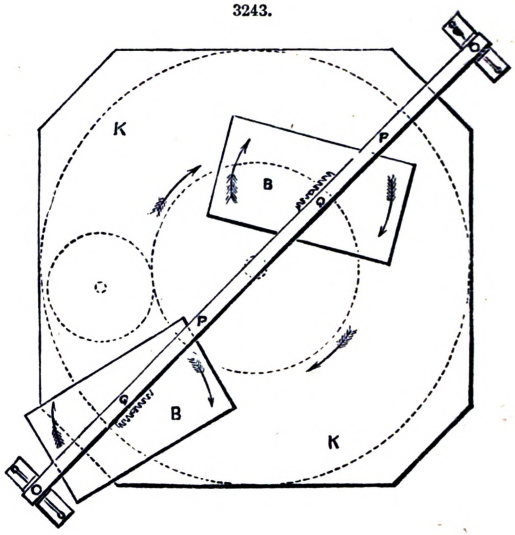

This machine has been found to answer equally well for smoothing as for grinding; and this is perhaps its most successful feature in a commercial and economical point of view. Both these processes are now completed on it at the Ravenhead Glass Works, the finishing portion of the smoothing operation alone being effected by manual labour for the reasons before stated. The plates of glass being generally oblong in form, it was found that the machine in its original shape, having a circular table K for carrying the glass, as shown by the dotted circle in Fig. 3243, entailed considerable waste in filling up the area of each table for grinding; and it was then determined to alter the shape to that of an unequal-sided octagon, or square with the corners taken off, as shown in the plan, Fig. 3243. No difficulty has been experienced in the process of grinding from this alteration in form, whilst the amount of waste in making up the tables has been considerably reduced, and greater facilities are obtained for grinding large plates. The amount of wear and tear on this machine has been found to be very small in comparison with the old machines, owing to the small number of working parts, the large extent of bearing surface, the smoothness of the motion, and the complete balancing of the table. The quantity of glass finished upon one of these machines a week is from 1200 to 1500 sq. ft., which is about one-third more than the old machines are capable of doing, due allowance being made for the difference of area.

The Mechanical Appliances employed in the Manufacture of Polished Sheet Glass.—Richard Pilkington, jun., observed, in the Proceedings of Inst. M. E., 1863, that the manufacture of British sheet

glass was introduced into England about the year 1832, by Messrs. Chance Brothers, of Birmingham. Since then it has become generally used, having almost superseded crown glass, in consequence of the comparative ease of obtaining the large squares at present required for windows, and the absence of wave lines by which the vision is so much distorted in crown glass. The average size of sheet glass is 40 in. by 30 in., but if required it can be made much larger; whilst with crown glass it is almost impossible to procure a square as large as 34 in. by 22 in. Sheet glass, when used for windows, has generally a peculiar appearance when viewed from the outside of a building, on account of the unevenness of its surface, an eyesore partially obviated by the improved method of flattening, but entirely removed when the glass is polished. When polished it is known by the name of patent plate, to distinguish it from British plate. This polished sheet plate has a decided preference over British plate, being harder and more difficult to scratch, besides taking a higher polish; it is also cheaper.

The manufacture of polished sheet glass consists of the three following processes;—1st, melting and blowing; 2nd, flattening; and 3rd, polishing.

1. *Melting and Blowing.*—Two furnaces are required, one for melting the materials or frit, and the other for reheating the metal whilst blowing it into a cylindrical form. The melting furnace is a reverberatory furnace, arranged for maintaining a high temperature with great uniformity and freedom from dust or other impurities arising from the fuel. The furnace, an eight-pot one, is shown in Figs. 3244, 3245. There are four gathering holes, or working holes A A on each side of the furnace, as shown in the side elevation, Fig. 3245, each of the eight pots B having a working hole. The temporary brickwork C beneath each working hole can be removed when required, either to turn a pot or whilst fixing a new one. A raised bed D extends the entire length of the furnace, upon which the pots are placed on each side of the fire-grate. The fire-grate E extends the entire length of the furnace, with the exception of a space of about 4 ft. in length, and is fed from each end of the furnace. The air is supplied through the underground passage F, entering from the open air; and by means of closely-fitting doors the draught is regulated with great nicety.

3244.

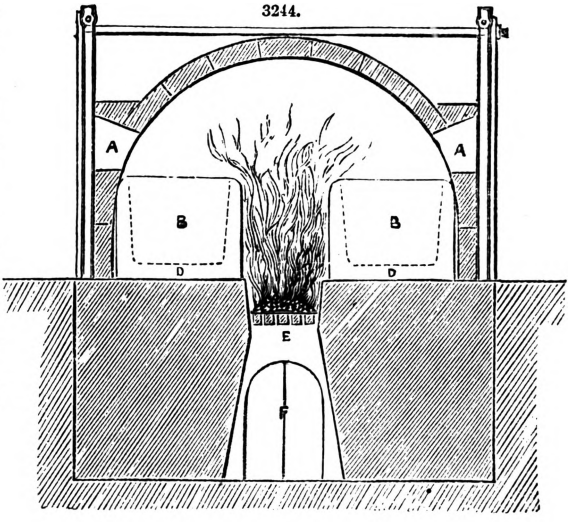

Formerly it was considered necessary to use stone for the melting furnaces, but at the present time large bricks made of best fire-clay have a decided preference. These fire-bricks vary in weight from a few lbs. to several cwts.; they are all made in moulds, dried, partially burnt, accurately dressed to templates, and built into the furnace, the whole being firmly secured by cast and wrought iron binders, as shown in Figs. 3244, 3245. A small fire is lighted upon the fire-grate, and gradually increased, first to dry the furnace, and afterwards to bake it. Great care and attention are given to this operation, for upon it depends the duration of the furnace. After being baked the furnace receives its number of pots, generally four or five on each side of the fire-grate, in all eight or ten pots. The manufacture of these pots is a matter of special importance, and they are made of the very best Stourbridge fire-clay, which, when thoroughly tempered, is formed into rolls of about 1 lb. weight each, and worked layer upon layer into a solid mass, free from cavities containing air, and making a pot of about 4 ft. height inside, 5 ft. diameter at top, and about 4½ ft. diameter at bottom inside, weighing when dried about 25 cwt., and containing about 22 cwt. of melted metal. Great care is requisite to prevent any particles of foreign matter or dirt from getting into the clay; for if that were to happen, the pot would not last its time, but would most likely give way when first heated to the working temperature. After being made, a pot remains in the same room for a year, the temperature being maintained at 60° Fahr., and it is then removed to a warmer room, where it remains in a temperature of 90° until it is wanted. When required for use, it is taken to the pot-arch to be baked, where the heat is gradually increased to that of the melting furnace, to which it is conveyed whilst red hot, as quickly as possible, by means of a carriage or a crowbar on wheels, and placed on one side of the fire-grate. This operation is repeated until all the pots are fixed in the melting furnace. The furnace ends are now closed, with the exception of the fire-hole at each end. A small portion of cullet, or broken glass, is put into each pot, and

3245.

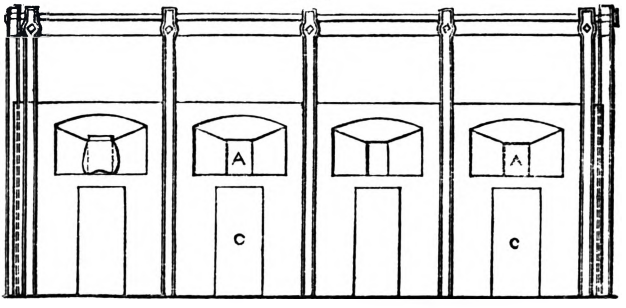

when melted is ladled so as to run down over the interior surface of each pot, after which the heat is increased for a short time. The pots are thereby glazed, and are now ready to receive the material to be melted.

The quantity of raw material, or frit, allotted to each pot is filled into it in three or four charges, allowing a sufficient interval of time to elapse between each charge to ensure the previous one being melted. About sixteen hours of intense heat are required to melt the entire quantity, during which time the fluid metal boils violently, and before it can be worked requires cooling, which takes about eight hours. Whilst cooling, the small bubbles of air arising from the boiling of the metal ascend and pass away, leaving the metal clear, excepting the surface, which is coated with impurities from the frit, from the roof of the furnace, and from the dust of the fuel, all of which must be removed before commencing work. Inside each pot, and floating upon the surface of the metal, is an annular ring, made of fire-clay, 2 in. thick, having an internal diameter of 18 in.; this inner space of 18 in. diameter is cleaned, instead of the entire surface of the metal, thereby saving both time and material. The cleaning or skimming is performed by means of a light iron rod, chisel pointed, which being warmed the metal adheres to it; and this process is repeated whenever any impurities are perceived upon the surface of the metal. The surface of the melted metal being cleaned, the workman dips into it the blow-pipe, Fig. 3246, having previously warmed the nose end of the pipe. Withdrawing 2 or 3 lbs. of the metal, he allows it to cool to a dull red, and then dips the pipe again; collecting by degrees in this way, as shown in Fig. 3247, a sufficient quantity to produce a given-sized sheet of glass, which on the average would weigh about 20 lbs. Then, while cooling the pipe he continually turns it round, drawing it towards himself, and in so doing forces the metal beyond the nose end of the pipe by means of the forked rest in which the pipe revolves, as shown in Fig. 3248, leaving as little metal as possible upon the pipe. The blower now takes the pipe, and places the red-hot mass in a hollowed wooden block upon the ground, Fig. 3249, keeping the pipe in a horizontal position whilst revolving it, thereby producing a solid

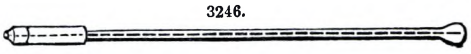
3246.

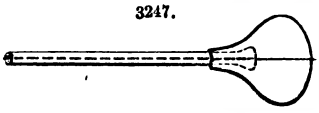
3247.

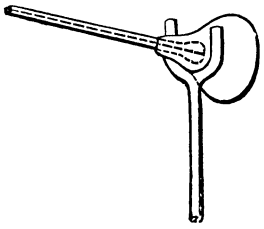
3248.

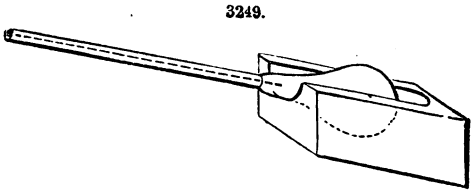
3249.

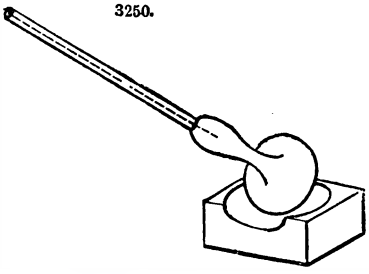
3250.

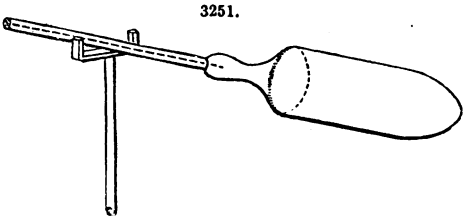
3251.

cylindrical mass of metal. During this process his assistant allows a fine stream of cold water to run into the block from a sponge, keeping the wood from being burnt, and giving a brilliant surface to the glass. He next raises the pipe to an angle of about 75°, and blows until he has produced a hollow pear-shaped mass, Fig. 3250, with its largest diameter the same as that of the finished cylinder. During this operation his assistant keeps the block wet, and a second block is generally used when commencing the blowing. The glass now requires reheating, which is done at a furnace built of ordinary brickwork in an oblong form, its dimensions being determined by the number of blowers intended to work at it, generally four, five, or six at each side. The ground at each side of this furnace is excavated to a depth of about 7 ft., a width of about 16 ft., and the same length as the furnace; and over each of these spaces four, five, or six wooden stages are erected, at distances of about 2 ft. apart. Having reheated the glass, the blower repeatedly blows to maintain the cylinder of equal diameter throughout, whilst lengthening it by swinging it backwards and forwards in the 2-ft. space, and occasionally swinging it round over his head, until a cylindrical piece of glass is produced, Fig. 3251, about 11 in. diameter and about 50 in. long, closed at one end, and having the blow-pipe attached to the other end. The blower first opens the closed end as follows: enclosing as much air as possible within the cylinder, and stopping the mouthpiece of the pipe with his hand, he exposes the end of the cylinder to the heat of the furnace, which, whilst softening the glass at the end, expands the contained air to such an extent that a small hole is burst in the glass, as in

Fig. 3252. This hole is flashed open by revolving the pipe quickly, and when flashed the end of the cylinder is withdrawn out of the furnace; and by keeping the pipe in a vertical position for a few seconds, the metal cools sufficiently to keep its shape. The cylinder is then placed upon a wooden trestle, and by touching with a piece of cold iron the pear-shaped neck near the pipe-nose at G in Fig. 3252, a crack is formed, which is continued round the neck by gently striking the blow-pipe, and thus the pipe is released, as seen in Fig. 3253. The cylinder has now one end of full diameter, but the other is contracted to about 3 in. diameter, Fig. 3253, and must therefore be cut off. This is accomplished as follows;—The cylinder having become cold whilst remaining on the trestle, the workman collects a small portion of metal upon the end of an iron rod, and draws it into a thread of glass about $\frac{1}{8}$ in. diameter by means of a pair of pincers. This thread he passes round the body of the cylinder at H H, in Fig. 3253, and after it has remained on a few moments the pincers dipped in cold water are applied to the heated part, and the sudden contraction causes the end to fly off with a sharp report, leaving the cylinder about 45 in. long and 11 in. diameter.

3252.

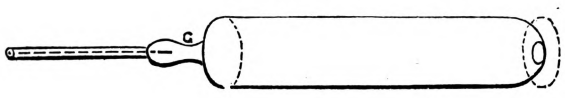

3253.

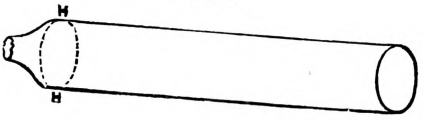

3254.

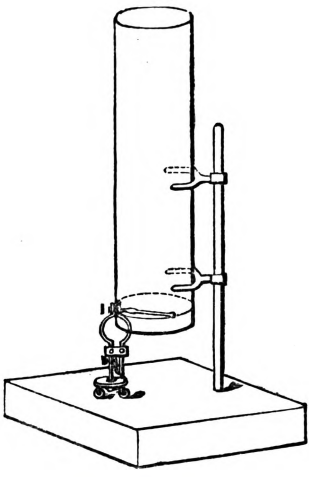

3255.

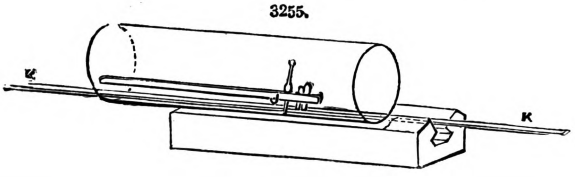

2. *Flattening.*—To produce a flat sheet of glass from the cylinder thus obtained forms the second process of the manufacture. The flattening is accomplished as follows;—The end of the cylinder that was flashed being slightly contracted in diameter, and the thickness of metal much reduced, it is first necessary to cut off about 2 in. length from that end. For this purpose the cylinder is supported in a vertical position by means of a cradle, as shown in Fig. 3254, over a small horizontal table; the bottom edge of the cylinder is introduced between the jaws of the small cutting instrument I, and the movable jaw carrying the cutting diamond is pressed by a spring against the interior surface of the cylinder; then by gently pushing the instrument forwards round the cylinder, allowing it to run freely upon its wheels, the end of the cylinder is cut off perfectly true. The cylinder then requires splitting longitudinally, which is accomplished by placing it in a horizontal position in a wooden cradle, as shown in Fig. 3255, and a diamond fixed in the cleft of a stick at J is drawn along inside the cylinder from end to end, guided by the straight-edge K, a gentle pressure being exerted on the glass in opposite directions, at the diamond cut, to complete the splitting.

The cylinder is now taken to the flattening kiln, Fig. 3256, which consists of two furnaces built together, the first, L, for flattening, and the other, M, for annealing, the former being maintained

3256.

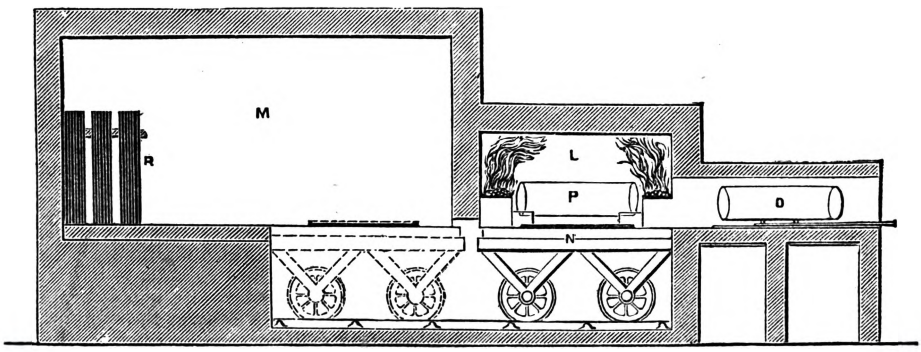

at a much higher temperature than the latter. A portion of the bottom of the flattening kiln L, slightly larger than the largest sheet of glass to be flattened, is supported upon a carriage N, which with the flattened sheet is made to travel into the annealing kiln M, this plan being a very great

improvement over the old method of pushing the flattened sheet whilst in a soft state. The movable bed N is either of clay or stone, and by careful work is made as true as possible; upon this a sheet of glass is first flattened and left there to flatten others upon, in order to obtain sheet glass with as true a surface as possible. The split cylinder to be flattened is gradually introduced into the flattening kiln, being placed first at O and then at P, and when sufficiently warmed is placed upon the glass bed N, with its split side uppermost; the heat soon softens it, so that with a slight assistance from the workman it lies down nearly flat on the bed N, and the sheet is afterwards carefully rubbed as flat as possible with a piece of wood fixed to the end of an iron rod. The movable bed N is now pushed forwards into the annealing kiln M, as shown by the dotted lines, and after placing another cylinder to warm at O and P, the workman removes the flattened sheet from the carriage N by means of a tool like a fork, and places it upon a prepared part of the floor of the annealing kiln M, to stiffen previous to piling it. The carriage N is now returned to the flattening kiln L, and the flattening operation repeated till the carriage again appears in the annealing kiln M. The previously-flattened sheet is first piled on its end against one side of the kiln at R, and then the last flattened sheet is removed off the carriage N, and left to cool on the floor of the annealing kiln, like the previous sheet. This flattening process is continued until the annealing kiln M is filled, when it is closed up, and allowed to cool, generally from twenty-four to thirty-six hours, the time being regulated by the thickness of the glass. On the completion of the cooling, the kiln M is opened, and the sheets of glass are taken to the warehouse, where they are sorted to suit various purposes, a very large portion being packed and sent away without undergoing any further process.

3. *Polishing.*—The sheets intended to be polished are now selected, and pass through the third process of the manufacture to produce polished sheet plate. Two processes are necessary for this purpose, smoothing and polishing.

Smoothing consists in working two sheets of glass one upon the other, by hand, with emery and water between them; and as their surfaces become obscured, finer and finer *emery* is used until the surfaces are smoothed free from all defects. The apparatus used consists of a wooden bench, one half of which is 6 in. higher than the other; upon the former is placed a slab of slate about 1½ in. thick, larger than the sheet of glass, having as true a surface as possible. Upon this slab a sheet of glass is laid, with a piece of wet calico between the surfaces of the glass and the slab; by exerting a gentle pressure upon the glass the air is expelled from between them, and the sheet of glass is consequently held down upon the slab by the whole atmospheric pressure upon its surface, which holds it so firmly that when the sheets have to be raised from the slab many are broken, even by experienced workmen. The wet calico is used in this case instead of plaster of Paris for bedding the sheet of glass upon the table. In consequence of the close adhesion caused by the atmospheric pressure when the surfaces of the two sheets of glass get so true as to become closely in contact, it is impossible to work two large sheets one upon the other with the finest emeries, and it therefore becomes necessary to perform the latter portion of the rubbing process with a small piece of glass, say about 10 in. by 5 in., until the process is completed. Both sides of the sheet of glass having been smoothed in this manner, and after a careful examination found free from defect, the sheet is then handed over to the polishing machine.

The perfection of the smoothing process is entirely dependent upon the purity of the emery, and the perfect uniformity of the grain in each successive quantity employed; and consequently a very perfect process of cleansing and sorting the emery is requisite. The ordinary ground emery contains, besides numerous degrees of fineness of grain, many impurities, which must be removed, and the good emery must also be accurately sorted into portions varying in size of grain from coarse to the finest. For every degree of fineness a separating vessel or cylinder is required; and taking No. 1 as the coarsest quality, that cylinder is made the smallest in the series, No. 2 cylinder about twice the capacity of No. 1, and No. 3 twice the capacity of No. 2; and so on throughout the required number of cylinders. The emery-sorting apparatus is shown in Fig. 3257, and consists of the required number of cylinders, fixed so that No. 1 cylinder is about 3 in. higher than No. 2, and No. 2 the same height above No. 3, and so on. The cylinders are made of copper, and inside each is fixed a copper funnel S, long enough to reach within 3 or 4 in. of the bottom of the cylinder; and in the bottom of the cylinder is a hole closed by a wooden plug, or a valve T, of about 3 or 4 in. diameter, which is held up by the rod and spring balance U. The action of the apparatus is as follows;—A supply of water being maintained by the cistern V, a constant stream is delivered by means of the tap W into the funnel of No. 1 cylinder; the water descends through this funnel to the bottom, and ascends through the annular space to the top of the cylinder, whence it is conveyed by the spout X and poured down the funnel of No. 2 cylinder, ascending in the annular space of No. 2, and passing by the spout to No. 3 funnel; this is repeated as often as there are cylinders, and from the last and largest cylinder the overflow is carried to a drain. When the stream of water is running through all the cylinders, and also passing away at the overflow, the powdered *emery* to be cleansed and sorted is sprinkled into the funnel of No. 1 cylinder, and this is continued until enough has been fed to fill up to within ½ in. of the bottom of the funnel. No. 1 being the smallest cylinder, the current of water through it will be the fastest, and the grains of emery left behind in this cylinder will consequently be the coarsest. The feeding of the emery is then stopped for a short time, and the stream allowed to continue until the water is running quite clear into the funnel of No. 2 cylinder. The valve T at the bottom of No. 1 cylinder is now opened, allowing the emery and water to fall into a vessel placed beneath to receive it; and as soon as the stream of water is again running through all the cylinders and passing away at the overflow, more emery is again sprinkled into No. 1 funnel. The succeeding cylinders are emptied in the same way, as they respectively become filled with the finer sorts of emery. The beauty of this process is the simplicity of apparatus required, and the certainty of always obtaining an exact repetition of the several degrees of fineness in the respective cylinders. It will be observed that, in consequence of the cylinders increasing successively in capacity, the current of water ascending in the annular

spaces decreases in velocity in the same proportion; consequently, the emery deposited in each successive cylinder increases in fineness over that deposited in the previous one.

3257.

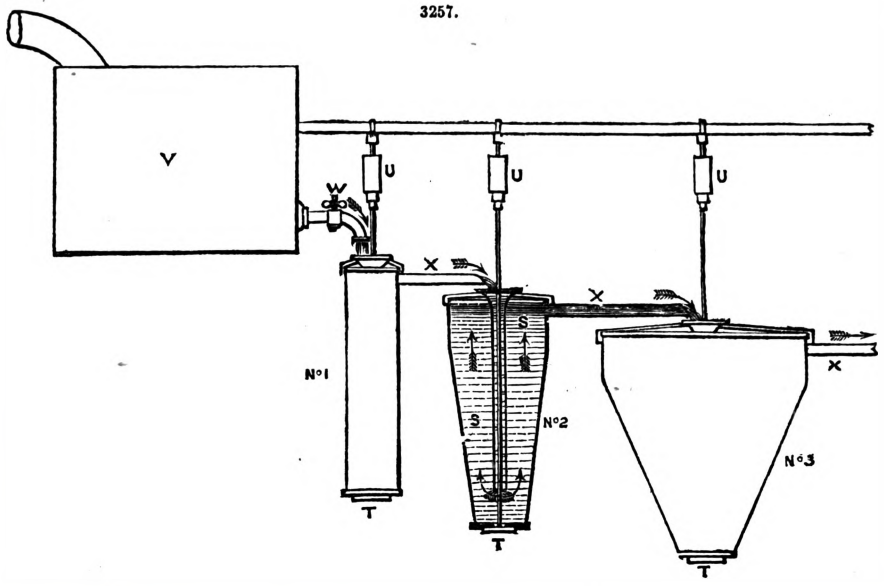

The polishing benches have two bars carrying the polishing blocks, and working lengthways backwards and forwards over the table on which the sheet of glass is laid, which is made to travel alternately from side to side, transversely to the bars. The polishing blocks are worked at about sixty double strokes per minute, and the bars carrying them are supported upon rollers at a height of 6 or 8 in. above the table. The moving table is worked similarly to the table of a planing machine, moving one way quicker than the other by a reversing motion similar to that of a planing-machine bed. It is generally considered that to obtain a good polished surface the polishing blocks should not pass twice in succession over the same surface. Upon the moving table are fastened slabs made of a wooden frame covered with slates, upon which the sheets of glass to be polished are bedded in plaster of Paris. After one side has been polished, the glass is taken up and relaid, and the other side polished. The polishing blocks are about 5 in. square, covered with felt, and weighted with about 84 lbs. each. The red liquor used in polishing is red oxide of iron, obtained by burning sulphate of iron in a reverberatory furnace to a dark red when cold, and it is then ground in water to the finest grain possible. The cutting grain of this material is about the hardest and finest that can be produced, and well worth examination by the microscope.

The appellation of *glass* is given to hard substances endowed with a certain degree of transparency, and presenting a peculiar kind of fracture called *vitreous*. In this point of view, many fusible substances which, on cooling, do not crystallize easily, such as phosphoric and boracic acids, should be classed among the *glasses;* but in common parlance the name *glass* is exclusively applied to double transparent silicates, which are worked when hot by blowing, and which are unchangeable in water. Glass is generally composed of a double silicate of lime and potassa or soda. In many kinds, as in bottle glass, the alkaline silicates are partly replaced by very fusible metallic silicates, such as the silicates of iron; in some, oxide of lead is also substituted for the lime. This last kind bears the name of *crystal*.

Before treating of the properties and composition of the various kinds of glass used in the arts, it is necessary to examine, more in detail than we have hitherto done, the properties of the simple silicates which enter into its composition.

Alkaline Silicates.—The only silicates used in the manufacture of glass are the silicates of potassa and soda, the most fusible of all the silicates; their degrees of fusibility greatly varying, however, with the proportion of the base. In order to express clearly the composition of the simple or multiple silicates, the ratio existing between the oxygen of the silicic acid and that of the united bases is generally indicated, as well as the proportion of the quantities of oxygen contained in the several bases. If silicic acid is fused with two or three times its weight of potassa or soda, a substance is obtained apparently homogeneous, melting at a red heat, and completely soluble in cold water. Silex, fused with an equal weight of potassa or soda, also produces a homogeneous substance, readily fusible, but no longer completely soluble in water. As the proportion of alkali diminishes, the vitreous mass becomes more difficult of fusion: an alkaline silicate, in which the oxygen of the alkali is to that of the silicic acid as 1 : 18, fuses only at the highest temperature of a forge-fire.

Soluble glass is a vitreous product obtained by melting together, in an earthen crucible, 15 parts of sand, 10 of carbonate of potassa, and 1 of charcoal. This substance, treated with cold water, parts only with the foreign salts which were mixed with the carbonate of potassa, but is itself completely dissolved in four or five times its weight of boiling water. It has been proposed to use this substance to render cloth, and particularly theatrical decorations, incombustible. In Germany, this combination, known by the name of *wasserglas*, a large manufactory of which is at Prague, is extensively employed for rendering especially the wooden work of buildings incombustible, and protecting them at the same time from decomposition (rotting). In England it is used for the

same purpose, made up with various pigments, as *silica colours*. It probably would also make an excellent artificial marble, capable of being moulded into architectural ornaments, or spread as a plaster on walls, when made up with proper proportions of porcelain clay, or, perhaps, even chalk or plaster of Paris, with a slight admixture of borax. It was first obtained by Fuchs, at Munich. In fact, if a coat of this solution be applied to any stuff, it remains covered, after drying, with a transparent and fusible varnish, which preserves it from the air; and it burns with difficulty, because the silicate prevents the access of the air. The stuff merely carbonizes, and does not favour the progress of the fire, as would be the case if its surface were free. Many fusible and non-efflorescent salts, among which are the phosphate and borate of ammonia, would produce the same effect. The silicates of potassa and soda are distinguished by the property of not crystallizing on cooling after fusion, owing to their passing from the state of perfect liquidity to that of a solid, not suddenly, but through all the intermediate doughy conditions. This property accompanies the alkaline silicates in their combination with the other metallic silicates, and is very important, as it facilitates the working of these multiple silicates by blowing; and, moreover, the substance retains its transparency after cooling.

Silicates of Lime.—The silicates of lime melt at only very high temperatures. The most fusible compound is that resulting from the union of silicic acid with lime, in such proportions that the oxygen of the lime is to that of the silicic acid as 1 : 3; this silicate melts in a strong forge-fire, and becomes crystalline on cooling. The silicates of lime, having a ratio of 1 : 4 or 1 : 1 between the oxygen of the base and that of the acid, do not fuse completely, only softening in the highest heat that can be produced in a forge-fire.

Silicates of Magnesia.—The silicates of magnesia are as difficult of fusion as those of lime. The most fusible is that of which the formula is MgO, SiO_3; it melts in a strong forge-fire.

Silicates of Alumina.—The silicates of alumina are still more infusible than those of lime and magnesia. The silicate $Al_2O_3, 3SiO_3$, which appears the most fusible, merely softens in a forge-fire. All these silicates melt easily in the oxyhydrogen blow-pipe; for we know that alumina and silex melt separately in the powerful heat produced by this apparatus.

Silicates of the Protoxide of Iron and Manganese.—These silicates, which enter into the composition of some kinds of glass, melt much more readily than the silicates of the earths and those of the alkaline earths. The silicates FeO, SiO_3 and MnO, SiO_3 may be melted in the common furnaces of our laboratories; they all crystallize easily by slow cooling.

Silicates of Lead.—The silicates of lead are fusible in proportion to the quantity of oxide of lead they contain; that showing the composition PbO, SiO_3 melts at a strong red-heat. The silicates of lead crystallize with difficulty; the cooling must take place very slowly, in order to obtain any indices of crystallization in the mass.

Multiple Silicates, formed by the Alkalies, the Alkaline Earths, the Earths, and Metallic Oxides.—Several multiple silicates, in the form of beautiful crystals, are found in nature. We know that feldspar is a double silicate of alumina and potassa, of the formula $KO, SiO_3 + Al_2O_3, 3SiO_2$. This mineral melts in a forge-fire, and does not crystallize during the very slow cooling of a porcelain furnace; but crystals of this compound have been found in the fissures of iron blast-furnaces, showing the same form as those of native feldspar. When the alkaline silicates are melted with other metallic silicates, vitreous substances are generally obtained after cooling, which appear homogeneous, and crystallize only when the cooling is extremely slow. But it is difficult to decide whether these substances are formed by a homogeneous chemical combination, or whether they merely result from a solution of various silicates in each other; a solution which has set in mass, without crystallizing during the process of cooling. The temperature at which a multiple silicate fuses is almost always below the medium temperature of fusion of the various simple silicates which compose it; sometimes it is even below that of the most fusible silicate entering into the combination. Thus, the simple silicates of alumina and lime are nearly infusible in our forge-fires, but they form, when combined, double silicates which readily melt in these fires. By adding to a silicate which crystallizes easily on cooling one which has not this tendency, for example, an alkaline silicate, double silicates are obtained, which crystallize with great difficulty, and preserve their vitreous appearance after cooling. Thus, the double silicates of potassa or soda, combined with those of lime or oxide of iron, do not crystallize after fusion. Silicate of alumina likewise opposes the crystallization of the multiple silicates into which it enters, although less effectually than the alkaline silicates. The silicates of potassa and soda lose by volatilization a large proportion of their bases. Thus, it may be explained how the multiple silicates containing alkaline silicates become less and less fusible as these are allowed to remain for a longer time in furnaces at a very high temperature, and acquire, with time, the property of crystallizing by slow cooling, at the same time losing their vitreous appearance.

We have seen that the alkaline silicates which contain a large proportion of alkali are soluble in water. When they contain more silex, they are not attacked by this fluid, but they may be by powerful acids; but when they are still richer in silex, even acids do not affect them. The silicates of lime, alumina, and oxide of lead are attacked by acids when they contain a large proportion of base, but they are intangible when rich in silex. Fluohydric acid, however, decomposes every silicate, whatever proportion of silicic acid it may contain, for it attacks quartz itself. By combining the alkaline silicates with silicate of lime, double silicates are obtained sufficiently fusible to be worked by blowing, and nevertheless containing enough silicic acid to resist the action of acids.

We shall divide the various kinds of glass into three grand classes:—

1st. Common colourless glass, which is a double silicate of lime and potassa or soda.

2nd. Common coloured glass, or bottle glass, a multiple silicate of lime, oxide of iron, alumina, and potassa or soda.

3rd. Crystal, which is a double silicate of potassa and oxide of lead.

1st. *Colourless Glass.*—Common colourless or white glass, which is used for making tumblers,

window glass, and looking-glasses, is a double silicate of lime and potassa or soda, either of these being preferred according to its price. Carbonate of soda being much cheaper in France than carbonate of potassa, is almost exclusively employed in the manufacture of white glass; in Germany and the north of Europe the potassa, being cheaper, is preferred. The selection of these bases is not a matter of indifference. Soda yields a more fusible and easily-worked glass, but it is always more or less coloured by a greenish-yellow tinge, not perceptible when the glass is very thin, but very decided when it is thicker, as, for example, in a window-pane.

The most beautiful glass having a base of potassa and lime is the Bohemian. This glass, made with the utmost care from choice materials, is remarkable for its lightness, its brilliant transparency, and permanency. The ratio between the oxygen of the silicic acid and that of the bases is as 4 : 1, sometimes rising to 6 : 1; the oxygen of the lime is to that of the potassa as 1 : ⅔ in the most esteemed tumbler-glass of Bohemia. This proportion is as 1 : 1 in the glass used for mirrors, in which great fusibility is required. The proportion of silex is increased in order to make hard and infusible glass; in this way the Bohemian glass tubes for chemical purposes are made, as they are much less fusible than the French glass, and therefore preferable for organic analysis. The silex used in Bohemia is the hyalin quartz of the old rocks, found in the form of large pebbles in the fields or the beds of the mountain streams. This quartz is heated to a strong red-heat in a reverberatory furnace, and then thrown into cold water, by which it becomes very friable, and is then, without difficulty, finely powdered by stampers, or ground by edge-stones. The carbonate of potassa used in the manufacture of Bohemian glass is the refined carbonate; nevertheless, this salt is never pure, some carbonate of soda always being mixed with it. The crude potashes are carefully selected and refined by solution: the crude potash, on being treated with one-half its weight of water, leaves the foreign salts, as well as a considerable quantity of carbonate of potassa, as a residue. The solution yields, when evaporated, potassa for the manufacture of first-quality glass, while the remainder serves for that of an inferior quality. The lime is obtained by subjecting a very pure and often perfectly white saccharoid carbonate of lime to calcination in a reverberatory furnace.

When these materials, however carefully they may have been selected, contain a small quantity of protoxide of iron, a greenish tinge, which greatly lessens its commercial value, is imparted to the glass. This discoloration is remarkably destroyed by adding to the mixture a small quantity of peroxide of manganese. The protoxide of iron imparts a deep green colour to glass, when present in any quantity; but, if converted into a sesquioxide, it gives a scarcely perceptible yellow tinge. Sesquioxide of manganese colours the glass violet; but a corresponding quantity of protoxide scarcely produces a sensible change. If, therefore, to a mixture to which protoxide of iron would give a high colour, a quantity of peroxide of manganese sufficient to transform the protoxide of iron into a sesquioxide, by passing itself into the state of a protoxide of manganese, is added, a nearly white glass is obtained; for the colour it then has is due only to the sesquioxide of iron, which produces a scarcely perceptible yellow tinge, the protoxide of manganese effecting no colouring at all. But it is important not to use an excess of peroxide of manganese, because the glass would have a violet shade, owing to the formation of sesquioxide of manganese. Peroxide of manganese, on account of this special use, is called the *glass-maker's soap*. Frequently, also, a small quantity of arsenious acid is added to the mixture: as this acid is completely volatilized during the melting of the glass, none of it remains in the objects manufactured: its object is merely to render the mixture more homogeneous, or to facilitate the *refining* of the glass. By volatilizing at a high temperature, it forms bubbles of gas, which, on traversing the fluid mass, mix its several particles together, and precipitate the solid material scattered through it.

The fuel used in Bohemia is a resinous wood, burning with a bright flame, and causing a very rapid fusion. The air of the furnace being always oxidizing, no alteration of the glass need be feared by the carbonaceous dust or other particles contained in the smoke. An admixture of carbon would considerably injure the quality of the glass, and discolour it; but when it exists in small quantity, the glass assumes a beautiful yellow colour. These coloured glasses are often made expressly. When it is present in somewhat greater quantity, the glass assumes a purple-red colour. Peroxide of manganese opposes also this discoloration of glass by carbon, an accident which frequently happens when the furnace has no proper draught. In some glass-houses, it is prevented by the addition of a small quantity of nitrate of potassa.

A white glass of first quality is made by melting together 110 parts of pulverized quartz, 64 parts of refined carbonate of potassa, and 24 parts of caustic lime.

In other glass factories in Bohemia beautiful tumbler-glass is made of a mixture of 120 parts of pulverized quartz, 60 parts of refined carbonate of potassa, 25 parts of caustic lime, ½ part of arsenious acid, 2 parts of peroxide of manganese, and 2 parts of nitre.

First-quality white glass is made in France of white quartzose sand, artificial soda, quicklime, and a certain proportion of fragments of glass: in this glass the ratio of the oxygen of the silicic acid to that of the united bases is ordinarily as 4 : 1. This composition gives an easily fusible but slightly tender glass. When a harder glass is desired, the proportion of silicic acid is increased. A fine sand, as white as possible, is selected, and sometimes made more friable by heating it to redness, and throwing it in that state into cold water. The sands from Aumont, near Senlis, from Etampes and Fontainebleau, are highly esteemed, and are exclusively used in the glass factories in the environs of Paris. The lime is obtained from a limestone as pure as possible, and previously calcined in an oven to drive off the carbonic acid; it is then exposed to the air, and falls to dust. It is sometimes used in the state of carbonate of lime, finely powdered. Very white chalk, as that from Bougival, near Paris, is perfectly adapted to this purpose. For first-quality white glass, the carbonate of soda obtained in the manufacture of artificial soda is used. For the inferior qualities, sulphate of soda, which is cheaper than the carbonate, is substituted; but as the sulphate of soda is decomposed by silicic acid only at a very high temperature, at which the crucibles would soon be destroyed, a certain quantity of charcoal is added: this facilitates its decomposition, by abstracting

a portion of the oxygen from the sulphuric acid, thus causing it to pass into the state of sulphurous acid, for which the affinity of soda is much more feeble. One part of charcoal is generally mixed with 12 or 14 of sulphate of soda.

The materials, intimately mixed, undergo a preliminary calcination called *frit*, before being placed in the melting pots, intended to commence the combination, and at the same time to allow the substance to be introduced into the melting pots already heated to redness. The breaking of the pots by sudden cooling is thus avoided, and the fusion is more rapid.

Figs. 3258, 3259, represent a glass furnace for the manufacture of window glass. Fig. 3259 gives a horizontal section made at the height of the line A B of Fig. 3258; Fig. 3258 represents a vertical section of the oven, in the direction of the line C D of Fig. 3259. The oven is composed

3258.

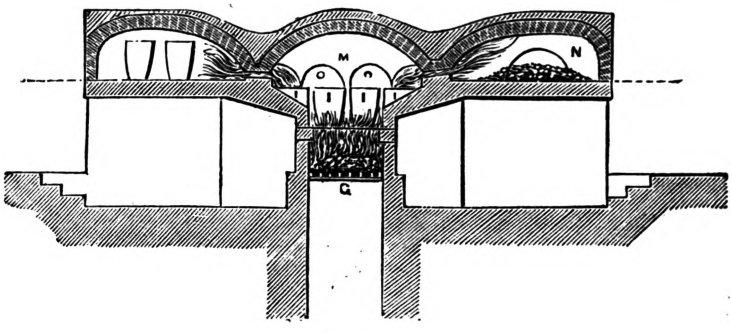

3259.

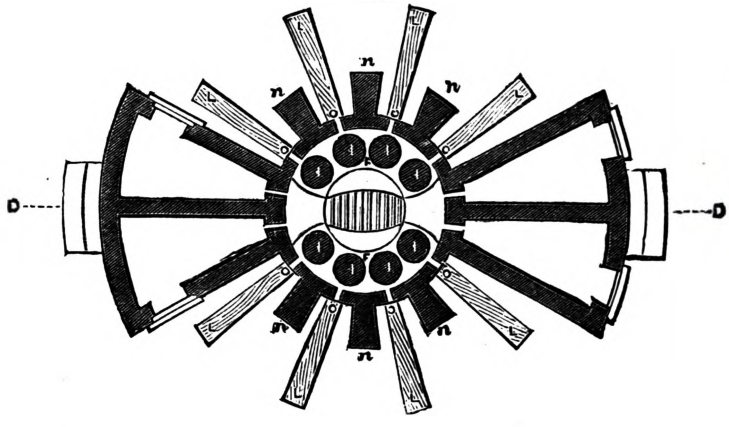

of an arched space M, in the middle of which is the grate G above the ash-hole. On each side of the grate are two shelves F, of strong mason-work, on which the pots I I are placed; the pots are introduced through several doors in the upright wall of the oven, which are subsequently closed up with bricks. A circular opening *o* is preserved above each pot, large enough to allow the material to be withdrawn and to introduce into the oven the object to be manufactured. The flame of the fuel on the grate G rises in the oven M; it is then conducted by openings into the lateral ovens N N, called *arches*, in which the preliminary preparation is made, the *frit* of the mixture; in these same arches, the new pots are kept for a long while before introducing them into the principal oven, in order gradually to prepare them to bear the high temperature of the ovens, and render them stronger. The flame and smoke, having passed through the ovens N, escape by the flues. Each pot is attended by two workmen, a master glass-blower and an assistant. The master-blower, standing on a small wooden bridge L, raised from 1 to 1½ mètre above the ground, is thus enabled to dip into the pots and handle the pieces he is about to blow. Small walls *n n* separate the working spaces of each pot, in order that the blower may not be inconvenienced by the heat of the adjoining working hole.

Great care is required in the manufacture of the melting pots; only the most infusible clays can be used; the process is described under CASTING AND FOUNDING. They are generally $0^{m}{\cdot}7$ to $0^{m}{\cdot}9$ in depth, and will hold about 400 or 500 kilogrammes of melted material. The pots when newly made are kept for several months in hot rooms, so as to dry slowly. They are then introduced into the arches of an oven, the temperature of which is not very high, and are gradually and slowly brought nearer to those parts of the arch where the heat is greatest. They are introduced into the principal furnace only after having been subjected to a very high temperature. Each pot should serve for several meltings; it is rarely necessary to replace all the pots of a furnace by new ones. They are thrown aside as they wear out, and a sufficient supply should always be kept in the arches, to replace those which are destroyed.

The mixture of the material is generally composed of 100 parts of sand; 35 to 40 parts of chalk; 30 to 35 parts of carbonate of soda, or an equivalent quantity of a mixture of sulphate

of soda and charcoal; and 50 to 150 parts of broken glass, or *cullet*. These materials, intimately mixed, are set to frit in an arch of the furnace, where they are turned from time to time, in order to render the mixture more uniform. The fire on the grate is made to burn actively after the working holes of the furnace have been closed. The workman deposits the frit in the pots, removing it red hot from the arch with a shovel; after the addition of each shovelful he waits until the material is melted before adding another, and so on until the pot is filled. He then leaves it to itself for several hours, in order to clear it of bubbles of air and foreign substances which rise to the surface. These substances, called *glassgall* (also called *sandiver* or, commonly, *salts*), are formed by alkaline salts in excess, which have not been decomposed by the silicic acid; they are particularly numerous when impure carbonate of soda has been used, or when a mixture of sulphate of soda and charcoal has been substituted for it. The workman generally removes them with an iron ladle. From time to time he extracts a small quantity of melted glass, and judges of its quality by its appearance after solidification.

When the glass is sufficiently fused, the temperature of the furnace is lowered, in order to bring the glass to a consistency fit for working. We shall not attempt to describe the processes of glass blowing in detail, but merely that adopted in France for the making of window glass.

The *pipe*, Fig. 3260, is the principal tool of the master-blower. It is an iron tube, $1^{m}\cdot 50$ in length, having a perforation through its long axis of 3 millimètres in diameter; it is covered externally, to a distance of about 35 centimètres, by a wooden tube *c d*, to protect the workman's hand from the intense heat. At the end of each bridge L, Fig. 3259, is a small platform, of the height of $0^{m}\cdot 65$, protected by an iron plate, called the *marver*, on which the workman moulds the doughy glass, Fig. 3261, adhering to the end of the pipe into the proper shape for blowing. Near the *marver* is a wooden block, containing several hemispherical or pear-shaped cavities, which are kept constantly moist. The pipes are heated in a small opening at the base of the furnace. The workman, taking one, dips it into the glass, collects a certain quantity, withdraws it, and turns it so that the fluid glass may not separate, then collects an additional quantity, and hands the pipe thus charged to the master-blower. The latter, having received it, rests it on the iron platform, always turning it, dips it again into the pot, and then returns quickly to the platform with a mass of red-hot glass, and rests it, still keeping up the rotary motion, in the water which fills the cavity of the block. He then draws the greater portion of the glass which envelops the sides toward the end of the pipe, by means of a sheet-iron blade, Fig. 3262. The mass of glass, cooled by the water, but adhering to the end of the pipe, is carried back to the working hole to be softened. When the workman thinks it is soft enough, he withdraws the pipe, and recommences the same manipulation in the water, but at the same time blows in the pipe, so as to give the glass the shape of a sphere

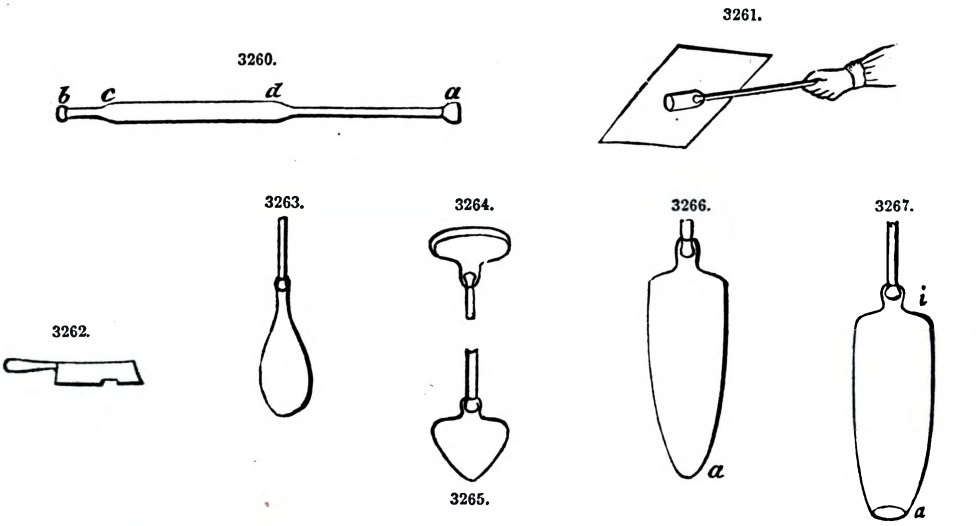

of about 3 decimètres in diameter, Fig. 3263, and then suddenly lifts the pipe into the air, and blows the sphere above his head. The upper part of the sphere then sinks by its own weight, and the bulb spreads horizontally, Fig. 3264. By suddenly dipping the pipe, the sphere assumes the shape of Fig. 3265. The workman then swings the pipe backward and forward, like the pendulum of a clock, blowing from time to time through the pipe while making this movement, so that, by the simultaneous action of weight and blowing, the glass balloon elongates and assumes the shape of a cylinder, Fig. 3266. The glass cylinder can rarely be brought to the proper dimensions by one operation, but generally must be heated several times in the oven. When the cylinder is finished the master-blower rests the pipe on a portable hook which the assistant arranges in the direction of the working hole; and introducing the cylinder into the furnace so that its end becomes excessively heated, blows through the pipe with the whole force of his lungs, until the cylinder is pierced. The piercing of the cylinder is also often effected in another manner. The assistant fastens, by means of a pipe, a small quantity of very hot glass to the extremity *o* of the cylinder; this end the workman dips into the oven, and blows forcibly through the pipe, or simply stops its orifice with his finger. The pressure of the internal air bursts the end *o*, where the glass has been softened by the drop of hot glass, Fig. 3267. The workman then removes the cylinder from the

fire, and the assistant cuts off with scissors the convexity of the cylinder, so as to open it entirely, Fig. 3268; the blower then moves the pipe with great rapidity, either by swinging it or causing it to revolve completely. This manœuvre cools the glass rapidly, at the same time preventing the object being made from becoming mis-shaped. When the glass is solid, the blower gives the pipe to the assistant, who, resting it on a trestle, at the same time applies a drop of water, taken up with a bent iron rod, to the point of junction of the pipe and cylinder, and, by a slight blow on the middle of the pipe, detaches the cylinder. The cylinders thus prepared are intended for window glass; but, being as yet opened at one end and closed at the other, this end must also be opened. As the panes must have a given size, the workman applies to the upper edge of the cylinder a stick on which the size of the pane is marked; then, without moving the stick, he dips from the pot, with an iron rod, a drop of glass, which is elongated by drawing out; by applying this red-hot glass thread to the circumference *c b* of the cylinder, Fig. 3269, at the line to be separated, a very accurate division is immediately effected.

3268.

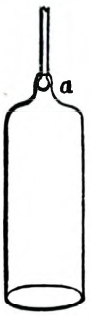

3269.

The glass cylinders are then carried to the *flattening* furnace, Figs. 3270, 3271, which is composed of two adjacent ovens V, U, separated only by a very small thin brick wall, extending from the floor to the roof. Beneath this partition wall is an opening *i i*, of 1 mètre in breadth, and a few centimètres only in height, serving for the passage of the panes, which having been flattened in the first compartment V, are reheated and slowly cooled in the chamber U. Both compartments are heated by furnaces beneath. The cylinders to be flattened are laid on a table; a

3270.

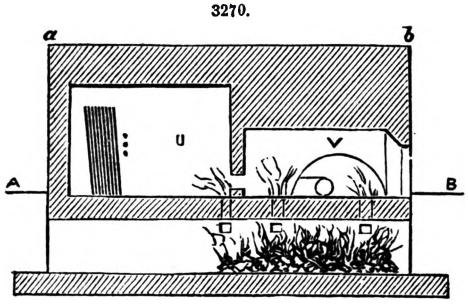

3271.

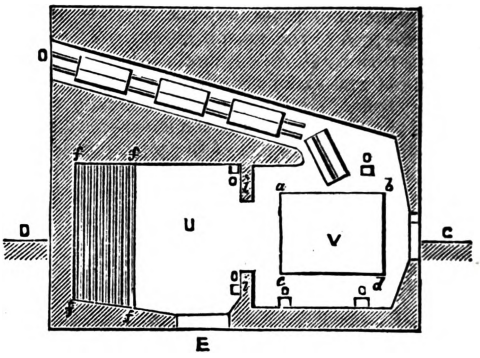

drop of water is passed over the upper edge *e d*, Fig. 3272, followed by a red-hot iron, which effects a clean fracture throughout the whole length; after this the cylinders are presented to the opening O, Fig. 3271, of the flattening furnace, being gradually introduced into it by means of two grooves, which regulate their progress, thus avoiding a too sudden heating, which might crack them. When the workman sees that the cylinders are about bending on themselves, he takes the hottest on the end of an iron rule, and draws it into the middle of the furnace, near the flatting plate V, Fig. 3271, which is often made of cast iron, and sometimes of thick plate glass, dusted with a little plaster to prevent adhesion. This plate is placed immediately in front of the longitudinal opening *i i*, through which the pane must pass to enter the baking furnace U; its upper surface should also be exactly on a level with the floor of the furnace, so that the pane of glass may meet with no impediment in its progress. The cylinder having reached the plate, the workman, armed with his rule, presses down to the right and left the two sides, which yield readily to the weight of the rule, Fig. 3273. He then takes another iron bar, Fig. 3274, terminating in a highly-polished piece, and applying this polished part on the glass, passes it rapidly over the surface, so as to flatten it perfectly.

3272.

3273.

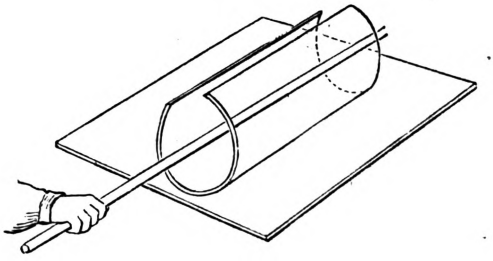

3274.

3275.

The pane, properly flattened, is pushed through the longitudinal opening *i i* into the second compartment U, where the temperature is much lower; a workman passes beneath it a thin iron rule, terminating in a fork, Fig. 3275, and raising the pane, which is already firm enough not to bend, rests it in a vertical position against an iron bar *f f*, Fig. 3271, which passes through the

whole length of the oven. A number of panes are thus heaped on each other, until the workman deems it sufficient. A second horizontal bar is then arranged, on which additional panes are disposed, and so on until the compartment U is nearly filled. The furnace is then allowed to cool: and the glass, when withdrawn, is ready for sale. Clock-shades, decanters, tumblers, &c., are made of the same glass. Inferior glass articles, such as common window glass, apothecaries' phials, &c., are made of less pure materials; they are commonly coloured green by protoxide of iron.

In France, the base of plate glass is a mixture of soda and lime, and the oxygen of the silicic acid is to that of the united bases as 6 : 1. For the same quantity of lime, a quantity of carbonate of soda is added double of that contained in window glass, because it is necessary to give greater fusibility to plate glass. In the plate glass factory of Saint-Gobain, which is the largest in France, the mixture is made of 300 parts of very white quartzose sand, 100 parts of dried carbonate of soda, 43 parts of lime slaked in the air (fallen lime), and 300 parts of cullet. The materials are most carefully selected and purified; for it is essential to obtain as white and perfect a glass as possible. Melting furnaces similar to those described are used, but they are always heated by wood. The material passes successively into two pots; it is first melted in a conical one, into which it is gradually poured until the pot is nearly filled. This fusion requires fifteen to sixteen hours; it is then allowed to fine, by rest, at a high temperature. Workmen then remove the liquid glass with copper ladles, and transfer it to smaller square pots, called *cuvettes*, placed in the furnace on the same shelf and alongside of the melting pots. When the transfer has been effected, the working holes are closed, to restore fluidity to the glass; the cuvettes are then removed on a peculiar kind of cart, and brought above a very smooth bronze table, previously heated by red-hot coals laid thereon. The fluid glass is poured on this table, spread out, and smoothed by means of a cylinder or roller; when cooled it is placed in a furnace and again heated, in order that it may easily bear changes of temperature. It is then divided into pieces of the requisite size, leaving out the defective portions, and *polished*, by fixing the glass on a stone table with plaster, and rubbing it with quartzose sand, by means of a second piece of glass smaller than the first. In making large glasses, several pieces, set in motion by a machine, are used at once. The surface of the glass thus becomes perfectly smooth, and is *rough-ground*, but as yet unpolished. The final *polish* is given by rubbing the surface first with finer emery, diluted with water, and then rubbing it with colcothar, also diluted with water, by means of heavy polishers covered with felt.

2. *Bottle Glass.*—Bottles are made of cheap materials, because it is important that their price should be low, and the peculiar colour is not a matter of much importance. The most ochreous sands are frequently preferred, because the oxide of iron they contain imparts fusibility to the glass. Pure alkaline carbonates being too expensive, the alkaline material is furnished by the crude sea-soda and wood ashes. A considerable portion of washed ashes, called *spent ashes*, is added, which introduces the silicates of alumina and potassa. Lastly, a large quantity of cullet is poured into the mixture. In bottle glass, the oxygen of the silicic acid is double or treble that of the united bases. The following is the composition of a mixture used for bottle glass;—

Ochreous sand	100	Spent ashes	150 to 180
Soda from seaweed ..	40 to 60	Ochreous clay	80 „ 100
Fresh ashes	30 „ 40	Cullet	100 „ 150

Bottle glass is of various colours. That of French bottles is a deep green, owing to protoxide of iron; those made in certain parts of Germany have a brownish-yellow hue, produced by a mixture of the sesquioxides of iron and manganese. Bottle-glass furnaces generally contain six pots of the largest size. The fusion should be rapid, to economize the fuel. The pots being entirely filled with the mixture, the fire is stirred up to effect the fusion, and when the material is liquid, a fresh quantity is added; seven or eight hours are required thus to fill the pots with melted glass, after which the work is begun immediately, the sandiver first being removed. The furnace is allowed to cool until the material has acquired the degree of consistency proper for working.

The pipes having been heated in the holes at the bottom of the furnace, an assistant dips one into the melted glass, collecting as much of it as he can, and withdraws it by a continuous rotary motion. When the glass has become sufficiently consistent not to bend on itself, he collects some more, and so on; when he has gathered enough to finish a bottle, he passes it to the blower, who applies the glass to the left face of the marver, turning the pipe constantly, in order to fashion the neck of the bottle; at the same time he compresses the glass at the end of the pipe by means of the sheet-iron plate, Fig. 3262, and then blows through the pipe, so as to give the glass an egg-like form, Fig. 3276. He then rests the glass against the edge of the marver, marks the neck of the bottle, heats the piece in the furnace, withdraws it, and blows it, after having introduced it into a bronze or earthen mould of the proper size. When the bottle is formed, the blower withdraws it from the mould, and by a see-saw motion raises it on high, Fig. 3277, and indents the bottom of the bottle, by means of an instrument, Fig. 3278, called the *punty* or *pontil*, consisting of a small square piece of sheet iron, the angle of which rests on the centre of the bottom of the bottle, while it revolves on the pipe. Then, taking a drop of water with the punty, he applies it to the neck of the bottle, which is immediately carried to a small cavity in the side of the furnace, and separated from the pipe by a dextrous jerk. The bottle being thus prepared, the blower turns it and fastening the pipe to its base, Fig. 3279, extracts from the pot with another pipe a small quantity

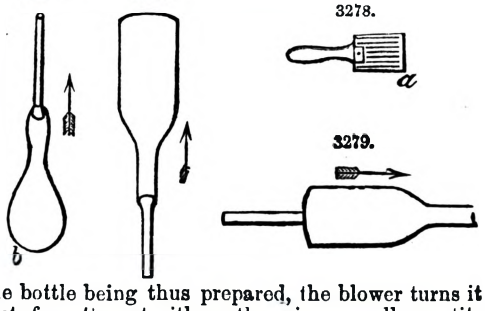

of melted glass, which elongates like a thread; the end of this he brings to the neck of the bottle, and by a rotary motion surrounds the mouth with a small glass cord; he then introduces the neck into the working hole, and finishes the mouth with pincers. The bottle being completed, an assistant takes it from the hands of the master-workman, carries it to the annealing furnace, and detaches the pipe by a dextrous blow. The bottles are arranged in rows, upon each other, in the annealing furnace, the heat of which should be kept below a dull red. When it is filled, the working holes are closed, and it is allowed to cool. Modern annealing furnaces are composed of a long gallery, heated by a furnace in the centre, and terminating by doors at either end. This longitudinal furnace is traversed by an endless iron chain, to which iron carts are attached containing the objects to be annealed. They enter at one end, and are withdrawn at the other, after having remained in the furnace long enough to be properly annealed.

3. *Crystal* is a kind of glass used only for the fabrication of articles of luxury: it must therefore be very transparent, perfectly homogeneous and colourless, and the greatest care must be exercised in the selection of the materials for its composition. Crystal is a double silicate of potassa and oxide of lead, the composition varying greatly in the different factories; the proportion of the oxygen of the silicic acid to that of the united bases ranges from 6 : 1 to 9 : 1. The ratio of the oxygen of the potassa to that of the oxide of lead ranges between still wider limits, namely, from 1 : 1 to 1 : 2·5. By increasing the proportion of oxide of lead, greater density and higher refracting and dispersing powers are imparted to the crystal, which produce in cut glass the beautiful effects of colour by transmitted light. But the proportion of the oxide of lead cannot be increased indefinitely, because the crystal, in that case, acquires a yellowish tinge. The finest and purest sand is chosen for the manufacture of crystal; the carbonate of potassa employed is refined, and the ordinary oxide of lead or *litharge* is not used, because it always contains some particles of metallic lead, which would be scattered through and injure the glass. Minium, an oxide of lead of a degree of oxidation superior to the protoxide, only is used: this oxide cannot contain metallic lead, and the oxygen it evolves when heated prevents the reduction of any lead by the carbonaceous dust or particles of other substances which may fall into the pot. The ordinary proportions for tumblers, decanters, &c., are 300 parts of pure sand, 200 parts of minium, and 100 parts of purified carbonate of potassa.

Crystal-glass furnaces are generally heated with wood; in some, however, coal is burned, but in that case the shape of the pots must be changed. Coal produces a very fuliginous smoke, the deoxidizing action of which it would be very difficult to prevent, if the glass were melted in open pots; peculiarly shaped pots, Fig. 3280, called *covered crucibles*, or *muffles*, are therefore used; their vertical opening is placed in front of the working hole of the furnace.

Many articles are made of crystal by blowing, but it is also cast in great quantities in bronze or wooden moulds, which latter are kept moist, so as not to carbonize too rapidly.

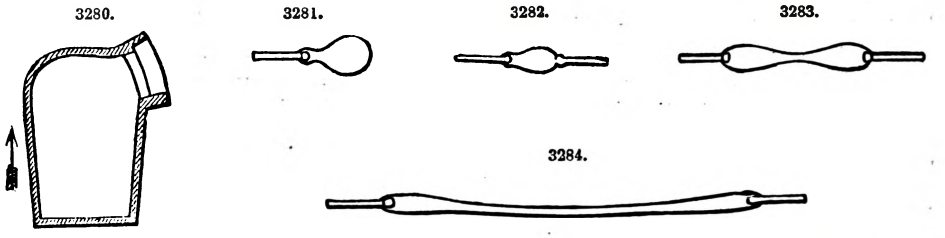

The glass tubes used by chemists, and also thermometer tubes are made by a particular process, which we shall briefly describe. The workman gathers on the end of his pipe a certain quantity of glass prepared as usual; he then blows it into the shape of a pear, Fig. 3281, which he makes larger or smaller, thicker or thinner, according to the size and thickness of the tube required. Another workman has also gathered some melted glass on the end of a pipe, and applies it to the bottom of the bottle, Fig. 3283; the two workmen then recede rapidly from each other. The glass pear is then drawn out, as seen in Figs. 3283, 3284, and is converted into a tube terminating into two swollen extremities. Tubes of 30 or 45 mètres in length are thus made; they are laid on a wooden floor, and divided into lengths of 1 mètre each. It will be seen that the external diameter of these tubes is not equal throughout its whole length, being generally smallest toward the centre; neither is the internal calibre more regular, and it is rare to find a tube possessing the same internal diameter throughout its whole length.

Manufacture of Glass for Optical Purposes.—*Crown Glass and Flint Glass.*—Two kinds of glass are used for optical instruments; one, called *crown glass*, is analogous in its composition to Bohemian glass, while the other, called *flint glass*, is a species of crystal. This glass must be as colourless as possible, and perfectly homogeneous; great care is therefore required in the choice of the materials entering into its composition, and they must be refined expressly. Ordinary flint glass is manufactured of 100 parts of white sand, 100 parts of minium, and 30 parts of very pure carbonate of potassa. The density of this flint is about 3·5. A more refracting flint, but one slightly coloured yellow, is made of 225 parts of white sand, 225 parts of minium, 52 parts of carbonate of potassa, 4 parts of borax, 3 parts of nitre, 1 part of peroxide of manganese, 1 part of arsenious acid, and 89 parts of cullet of the preceding flint.

The melting furnace, Fig. 3285, contains only one covered crucible or pot, into which the mixture is gradually introduced by small portions at a time, always waiting until the preceding charge has become perfectly fluid. Eight or ten hours are required for the whole charge of a pot. A strong blast is then applied, and kept up for four hours, to render the mixture perfectly fluid. When this is effected, a hollow cylinder *a b*, made of fire-clay, previously heated to redness, and

which does not sink in the melted glass, on account of its greater lightness, is introduced into the pot. Into the cavity of this cylinder a curved iron bar *f e* is passed, the end of which is heated to redness. By resting this bar on an iron gallows *k l*, the clay cylinder may be moved in any direction, so as to mix intimately the various parts of the liquid mass. The bubbles of air are thus driven out, and the whole rendered perfectly homogeneous. This operation must be frequently repeated, to make the glass as perfect as possible. The clay cylinder is then removed, and the furnace allowed to cool slowly for eight days. The pot is then taken out, and is broken after cooling, to retract the glass, on which small polished facets are cut, here and there, so as to judge of its quality in various parts. This mass is then broken into pieces, and those that are perfect are selected, and heated in a muffle to soften them; they are then rolled into balls with pincers, and afterward carried to moulds which give them a lenticular shape. Lastly, they are allowed to cool slowly in an annealing furnace.

3285.

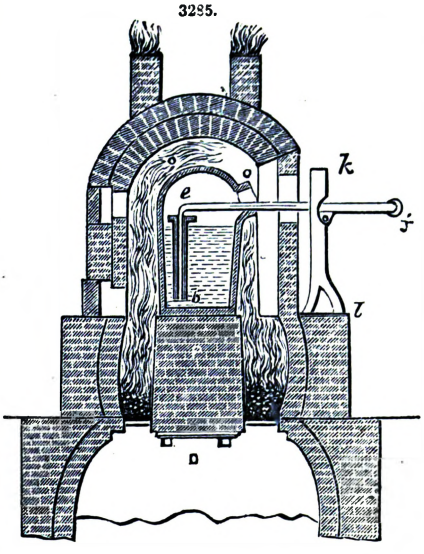

Crown glass is made exactly in the same way, of 120 parts of white sand, 35 parts of carbonate of potassa, 20 parts of carbonate of soda, 20 parts of chalk, and 1 part of arsenious acid.

By joining two lenses, properly cut, one of crown and the other of flint glass, *achromatic lenses* are obtained, which are remarkable for their property of giving the same convergence to all the coloured rays, so that a colourless object produces, in the focus of the compound lens, an image equally colourless, the edges of which are free from the coloured fringes always presented by images seen through simple lenses. This property, however, is very manifest only in those rays which do not depart very far from the axis of the lens.

Strass.—A peculiar kind of crystal is sometimes made, very dense and refracting, resembling the diamond when it has been properly cut. By colouring this glass with various metallic oxides coloured glasses closely imitating the precious stones are obtained. This crystal, called *strass*, should be made of the purest materials, and requires great care in fining: generally, a certain quantity of borax is added. The manufacture of artificial jewels has in modern times reached great excellence.

Enamel.—The name of *enamel* is given to a species of glass rendered opaque by an addition of certain metallic oxides. Peroxide of tin or stannic acid is generally used for this purpose: however, arsenious acid, phosphate of lime, or antimoniate of oxide of antimony may also be employed. Enamel is generally made of a very fusible crystal. An alloy of 15 parts of tin and 100 parts of lead are oxidized in a reverberatory furnace, by which a stannate of oxide of lead is formed, which is purified by levigation. 100 parts of this plumbeous stannate are then mixed with 100 parts of very pure sand and 80 parts of carbonate of potassa. An addition of small quantities of certain metallic oxides to this mixture gives coloured enamels.

Of the Imperfections and Alterations to which Glass is subject.—We have seen that objects made of glass are kept for some time in a furnace at a dull red heat, and then allowed to cool slowly. This process, called *annealing*, is a very essential operation, for glass cooled suddenly after blowing is so brittle as to be useless. It frequently happens that common tumblers, which are imperfectly annealed, break suddenly on a slight change of temperature; such glass sometimes, also, is fractured when exposed to the current of air from an open door. This property is highly developed in the *lachrymæ Batavicæ*, or *Prince Rupert's drops*. These are drops of glass suddenly cooled, and made by allowing drops of melted glass to fall into cold water; they thus become suddenly solid, in the form of tears, Fig. 3286, terminating in a long tail; and as the outer surface solidifies while the interior is still at a high temperature, it retains nearly the shape it had in the liquid state. The internal particles are kept in an abnormal condition by those of the surface surrounding them. If this resistance of the surface particles be removed, at only one point, the whole mass bursts with noise, and falls into dust. This occurs, for example, if the tail of the drop be broken off. A similar effect is produced in a small glass apparatus, long known as the *philosopher's phial*, a kind of glass tube, thick, and of a pyriform shape. The master-blower frequently makes them on his pipe, when trying the metal in the pot. If any hard substance, a small ball, for example, be dropped into this phial, which has not been annealed, the shock is sufficient to reduce the phial to dust. The workmen apply this tendency of glass to break in a given direction when touched with a cold body, to detach the pipe from the objects blown, or to crack the glass in any direction required.

3286.

When glass has been exposed for a long time to a high temperature, it loses, by volatilization, a considerable portion of its alkali, and becomes less and less fusible, at the same time acquiring the property of readily crystallizing by slow cooling. Thus masses of glass of a crystalline structure are often found in the worn-out pots which have been for a long time in the furnace, and cooled slowly; at other times, the crystallization is developed only in some parts of it, the remainder being vitreous; the vitreous portion always containing more alkali than that rendered opaque by crystallization. This alteration of the glass takes place not only at its fusing point, but also at a lower temperature. If a glass bottle be left for several days in a furnace, at a degree of heat approaching that which effects the softening of the glass, it entirely loses its transparency, and resembles a porcelain bottle. The glass thus altered, *devitrified*, is much less fusible than when

transparent. A peculiar art was attempted to be founded on this property, which consisted in making objects of blown glass, and then destroying their fusibility by devitrification. This devitrified glass was called *Réaumur's porcelain;* but the manfacture of it has been abandoned.

Glass containing a large proportion of alkali changes by exposure to moist air, its surface becoming rugose and cracked. Frequently an excessively thin pellicle of altered glass forms on it, producing the same play of colours as a soap-bubble, or a drop of oil on a large surface of water; an alteration produced by the surface of the glass parting, after a long time, with a portion of its alkali. It is particularly remarkable in pieces of glass which have remained buried for years in a damp soil. These pieces are sometimes found to have entirely lost their transparency, to be swollen, and cleavable into very thin lamellæ: then they exhibit the same play of colours as mother-of-pearl.

Various small objects are made of the glass tubes of commerce. For this purpose an oil lamp, generally made of tin, Fig. 3287, fed by a bellows, and called an *enameller's lamp*, is used. The wick is of cotton, and does not project very high. The bellows is worked with the foot: the blast of air is conveyed by a pipe which can be turned in various directions. By properly arranging the wick, and modifying the inclination of the pipe, and adapting a proper aperture to it, a flame of any size may be obtained at pleasure. When working with a plumbeous glass, or crystal, the flame must be made oxidizing by admitting a greater quantity of air; for if the flame were reducing, oxide of lead would be brought to the surface of the glass in the state of metallic lead, and the glass would be blackened. It is important not to heat the glass too suddenly, lest it should break; it is therefore first held for a few moments before the flame, and brought by degrees into the hottest part.

3287.

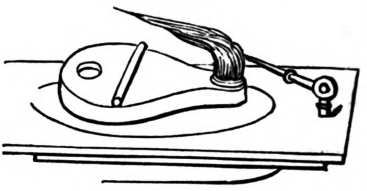

In order to bend a glass tube, it is heated to the distance of 3 or 4 centimètres on each side of the point of flexion, turning it constantly, so that its whole periphery may be uniformly heated. As soon as the tube is sufficiently soft to yield to a slight force, it is bent; but it is important not to make the curve too short, because the tube would be mis-shaped and brittle. The tube is therefore not heated at the point where it was begun to be bent, but the flame is directed on the adjacent part, so as to make a small arc of a circle. Tubes can be bent in an alcohol lamp even more readily than in an enameller's lamp, for it is better not to have the glass too hot.

In order to close a tube at one end, a longer tube is heated in the enameller's lamp, at the point of closure, turning it constantly in the flame. As soon as it is perfectly soft, both ends are gently drawn out, still turning it. The tube thus takes the shape of Fig. 3288. The point of the flame is then directed to the point *a* of the narrow part, and the two halves of the tube are separated, each of which will furnish a tube closed at one end; the ends are then rounded, and made more uniform in thickness. To do this, the end is again heated in the lamp, blowing into it occasionally, to round it. Lastly, a *border* is only required to complete it, which is made by simply heating the sharp edges until they are rounded by fusion. If the edges are to be widened, or a mouth made to pour liquids, it is done by applying an iron wire against the softened edges, by which means the aperture can be fashioned at will, Fig. 3289. When the end is to be closed, this end is heated in the lamp, and the heated end of another tube applied to it. The two tubes are soldered together, and the operation is then continued as just described.

3288.

3289.

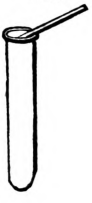

3290.

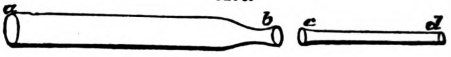

3291.

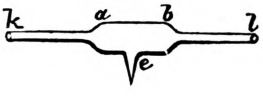

3292.

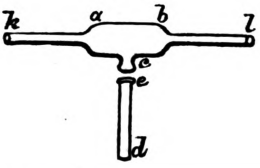

It is frequently necessary to solder a smaller tube *c d*, Fig. 3290, to the end of a larger one *a b*. The larger tube is then drawn out, in the lamp, till it is of the size of the smaller one, and the tube *a b* is next closed at the point *b* of the narrow part, by placing the part *b* in the point of the flame, and turning the tube between the fingers. Then, after having heated the closed end to soften it, a very thin sphere, which bursts by blowing through the opening *a*, is formed at the end *b*. By means of a file the glass is separated so as to leave only a widened edge-border at the end *b*. The same is done to the end *c* of the small tube; the ends *b* and *c* are then exposed to the flame, opposite to each other, turning them constantly, after having previously closed the end *a* with a cork. When these ends are sufficiently softened, they are pressed firmly against each other, the joint is equally heated throughout, and from time to time the operator blows through the small tube, in order to prevent the solder from forming a ring. Lastly, it is drawn out slightly, so that no swelling may exist at the point of union.

If a narrow tube *c d*, Fig. 3292, is to be soldered to the side of a larger tube *a b*, the point of the flame, after having rendered it as sharp as possible by a proper arrangement of the pipe and lamp-wick, is directed on the point *e*, Fig. 3291, of the tube *a b*. When it is sufficiently softened, the

end of a glass point, also heated, is fastened and drawn quickly forward: thus a point *e f* is formed on the tube *a b*. This point is closed in the lamp; then, having stopped the end *k* with wax, the point *e f* is again introduced into the flame, and when it is in fusion, a very thin sphere, which bursts, is formed by blowing through the open end *l*. A portion of the glass is filed off, the edges of the aperture are melted, Fig. 3292, and after having closed the end *l* with wax, the end *e* of the small tube, also heated, is brought in contact with the opening *e*. The joint is formed by gradually heating all its parts, and blowing from time to time through the opening *d*.

If a globe is to be blown at the end of a tube, the tube is closed in the lamp, and by continuing the action of the flame, a mass of glass, large enough to make the globe required, is collected at this end. This mass of glass being very soft, the tube is gradually extended by blowing gently into it. It is then heated again uniformly, and afterward, by constantly turning the tube and blowing gently, a globe of any size may be produced at pleasure. When the globe is to be large, and still be at the end of a narrow and thin tube, it is better to blow the globe separately on a larger tube, and then solder it to the narrow one. To do this, the larger tube is drawn out between two points, Fig. 3293, by the process before stated; one end, *a*, is closed in the lamp, and then the part A heated in the flame, so as to soften it completely. Lastly, the operator blows through the end *b*, turning it constantly, until the globe has attained the size required. The globe is then soldered to the tube. But as the globe is still terminated by a point, the latter is placed in the flame, and by blowing gently after having softened this part of the globe, it is distended so as to cause the small piece of glass to disappear. The bottles which are to contain the volatile liquids intended for analysis are blown in the same way.

3293.

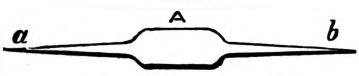

3294.

3295.

3296.

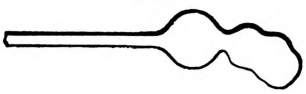

3297.

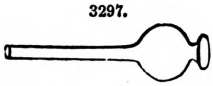

3298.

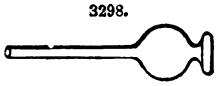

In order to fashion a funnel at the end of a tube, as, for example, on safety-tubes, a globe drawn out between two points, Fig. 3294, is soldered to the end of the tube, and then the point *a b* is detached, Fig. 3295. The part *a*, as well as the end of the globe, is heated, and when they are very soft, a smart blow of wind through the tube is given; thus a second irregular and very thin globe, Fig. 3296, fastened to the first, is produced; this is broken and the glass detached by means of a file, Fig. 3297, so as to leave only an edge, which is melted in the lamp, and properly widened by an iron rod, Fig. 3298.

In order to break a glass tube at any given point, a mark is made on it with a gun-flint or a very sharp three-edged file; the tube is then pulled in the direction of its length, and it separates at the mark. If the tube be large, it must be slightly bent at the same time. In order to separate thicker and larger portions, as, for example, to shorten the neck of a retort or flask, a mark with a file is made at the proper point, and followed with a point of red-hot iron; it then cracks in the direction of the mark.

A red-hot coal, held with a forceps, carried round the intended line of separation, answers the same purpose; care must be taken to blow away the ashes as soon as they form by contact with the cold glass, so as always to present a red-hot point to the surface of the glass.

The process of dividing a tube by friction, described in Hare's Chemistry, is so much superior to that adopted by previous operators, that the Editor has not hesitated to substitute it for the French mode;—"Some years ago, Isaiah Lukens showed us that a small phial or tube might be separated into two parts, if subjected to cold water, after having been heated by the friction of a cord made to circulate about it, by two persons alternately pulling in opposite directions. We were subsequently enabled to employ this process for dividing large vessels of 4 or 5 in. in diameter; and likewise to render it in every case more easy and certain, by means of a piece of plank forked like a boot-jack, and also having a kerf or slit cut by a saw, parallel to and nearly equidistant from the principal surface of the plank, and at right angles to the incision forming the fork. By means of the fork, the glass is held steady by the hand of the operator. By means of the kerf, the string, while circulating about the glass, is confined to the part where the separation is desired. As soon as the cord smokes, the glass is plunged into water, or if too large to be easily immersed, the water must be thrown upon it. This method is always preferable when the glass vessel is so open that, on being immersed, the water can reach the inner surface. As plunging is the most effectual method of employing the water, we usually, in the case of a tube, close the end which is to be sunk in the water, so as to restrict the refrigeration to the outside."—Hare's Compendium, ed. 4th, p. 60.

Coloured Glass and Painting on Glass.—Glass dissolves the greater part of the metallic oxides, and while it preserves its transparency, is often tinged with the most beautiful hues; on this property the manufacture of coloured glass is founded. It suffices to mix intimately with the metal of which the glass is to be made, a given quantity of the metallic oxide, to produce coloured melted glass; with certain metallic oxides, however, peculiar care is required. Protoxide of iron FeO imparts to glass a deep or bottle-green colour, while the sesquioxide Fe_2O_3 produces a yellow tinge. Oxide of copper CuO and oxide of chrome Cr_2O_3 yield a beautiful green, but of different shades. Oxide of cobalt CoO gives a brilliant blue; sesquioxide of manganese Mn_2O_3 a violet. A mixture of equal parts of oxide of cobalt and oxide of iron colours the glass black. Protoxide of copper Cu_2O

yields a very beautiful red colour, but so intense that the glass nearly loses its transparency if the oxide be in the proportion of a few hundredths. A fine purple is obtained by mixing a certain quantity of oxide of tin with finely-powdered crystal, soaking the mass in a solution of chloride of gold, and melting it, when dried, in a crucible. When the metallic oxide to be used as a colouring agent can be deoxidized in the furnace, as, for example, the sesquioxide of manganese can be, a small quantity of nitre is added to the mixture. A beautiful yellow glass is made by adding lampblack to a mixture which would produce common white glass. By varying the proportion of lampblack, several intermediate shades between a bright and a purple yellow can be produced.

When it is wished to make glass of clear colours with metallic oxides which possess powerful colouring action, it is difficult to obtain the shade desired by adding the proper quantity of the colouring oxide to the mixture in the pot. Glass is then set in layers (*verre plaqué*), so that it is formed of white glass throughout the greater part of its thickness, and has one face only formed by a thin layer of coloured glass; and in order to vary at will the intensity of the colour, the layers are made of suitable thickness. This kind of glass is made as follows;—Two pots are placed in the oven, one filled with white and the other with coloured glass. The workman first takes up with his pipe a certain quantity of white glass; then, when it begins to assume the proper degree of consistency, he dips it into the coloured glass, and thus fastens a layer of this on the white mass. He then blows the whole into cylinders, in order to make muffs for flatting. The inside of the cylinder is necessarily white, the layer of coloured glass being only external.

Painting on glass is done with very fusible and finely-powdered coloured glass. The composition of this glass varies with the nature of the colouring oxide; for the majority of them, a mixture of 2 parts of quartz, 2½ of oxide of lead, and 1 of bismuth is used; but as certain colouring oxides are altered by the oxides of lead and bismuth, in this case a mixture of 2 parts of quartz, 1½ of melted borax, ¼ of nitre, and ¼ of carbonate of lime is used. The colouring oxide is added to these mixtures, and they are melted in a muffle furnace; the glass obtained is reduced to an impalpable powder, ground in turpentine, and the paint thus prepared is applied with a pencil. The painted glass is then heated in a muffle, at a temperature sufficient to melt the coloured glass, but not to affect the object on which the painting has been made. In order to form the groundwork of the picture, glass coloured in the paste is generally used, the outlines and shades being painted on one of the surfaces. The various pieces of glass are then dextrously fitted together by means of small sheets of lead, each small pane harmonizing with the outlines and shades of the figures designed. The painted surface of the glass is placed outside, so that the picture is seen through the coloured glass. The numbers and divisions marked on enamel dial-plates are applied in the same way

Analysis of Glass.—We will suppose that the glass to be analyzed contains, or may contain, silex, potassa, soda, lime, manganese, alumina, oxide of iron, oxide of manganese, and oxide of lead. Five grammes of the glass, reduced to an impalpable powder, are intimately mixed with about three times its weight of pure carbonate of soda; the mixture having been weighed in a platinum crucible, the latter is covered with its lid, and heated in an alcohol lamp having a double current of air, so as to completely melt the carbonate of soda. For this purpose it is well to surround the crucible with a small sheet-iron chimney, extending a few centimètres beyond it: the chimney, at the same time increasing the draught, forces the flame completely to envelop the crucible. The carbonate of soda is kept melted for at least twenty minutes, and then allowed to cool. By using a thin crucible, the alkaline cup may be detached by the pressure of the fingers, and is received in a porcelain saucer, containing a certain quantity of water, and covered by an inverted funnel. Water, acidulated with nitric acid, being poured into the platinum crucible, and then into the saucer, the alkaline cup dissolves with effervescence, the funnel preventing any loss of substance, by the projection of the small liquid pellicles surrounding the gaseous bubbles which burst on the surface of the fluid. Toward the close the liquid is acidulated with an excess of nitric acid, and evaporated to dryness at a moderate heat. Hot water, acidulated with nitric acid, is poured on the dried matter; it is allowed to digest for some time hot, and then diluted with water; all the metallic oxides then dissolving, leave the silex alone as an insoluble residue. It is collected on a filter, calcined after being well washed, and weighed. A current of sulphuretted hydrogen is passed through the liquid, which precipitates only the lead in the state of a sulphuret; and finally, the liquid is heated to ebullition, still keeping up the current of sulphuretted hydrogen, in order to facilitate the deposit of sulphur. The sulphuret of lead is collected on a filter, and, after having washed it, the filter is burned in a platinum crucible, and the substance sprinkled with nitric acid, mixed with a small quantity of sulphuric, in order to convert it into sulphate of lead; lastly, it is calcined to redness. The weight of the oxide of lead is deduced by calculation from the weight of the sulphate of lead obtained. Sulphydrate of ammonia is then poured into the liquid to precipitate the alumina and the sulphurets of iron and manganese; the wet precipitate is redissolved in chlorohydric acid, and by the separation of the two oxides. The liquid, which then contains only lime, magnesia, and the alkaline salts, is boiled to drive off the excess of sulphydrate of ammonia, and chlorohydric acid added to decompose that which still remains. Lastly, it is supersaturated with ammonia, and the lime precipitated in the state of oxalate of lime by oxalate of ammonia; the presence of ammoniacal salts in the liquid keeping all the magnesia in solution. The solution is then concentrated by evaporation, an excess of carbonate of soda added, and it is evaporated to dryness, to decompose the ammoniacal salts, and drive off the ammonia as carbonate; it is then treated with water, which leaves the magnesia in the state of insoluble carbonate.

In the analysis just described the proportions of all the various components of the glass have been ascertained successively, with the exception of those of the alkalies, which must be found by a particular process. The glass is first dissolved in fluohydric acid. As this acid is difficult of preservation, it is better to prepare it freshly for each analysis, which is done in the following manner;—Into a small platinum retort, Fig. 3299, made of two pieces, very finely powdered fluor-spar is introduced and sulphuric acid added; on the other hand, 5 grammes of glass in impalpable powder are placed in a large platinum crucible, with a certain quantity of water, and covered with a sheet

of platinum pierced with two openings. The neck of the platinum retort passes through one of those openings; the other, much smaller, is traversed by a platinum wire, flattened into a spoon at its end, and used for stirring the material in the crucible. On gently heating the retort the fluohydric acid dissolves in the water of the crucible, attacks the vitreous matter, and a large quantity of fluoride of silicum is disengaged. The material is stirred from time to time with the platinum spoon, and when the glass is entirely dissolved, the crucible is gently heated, to drive off the excess of acid and evaporate the water; sulphuric acid is then poured upon the residue, completely to expel the fluohydric acid and convert all the oxides into sulphates. When the greater part of the sulphuric acid has been driven off by heat, the substance is treated with water, which leaves the silex and sulphate of lead as a residue.

3299.

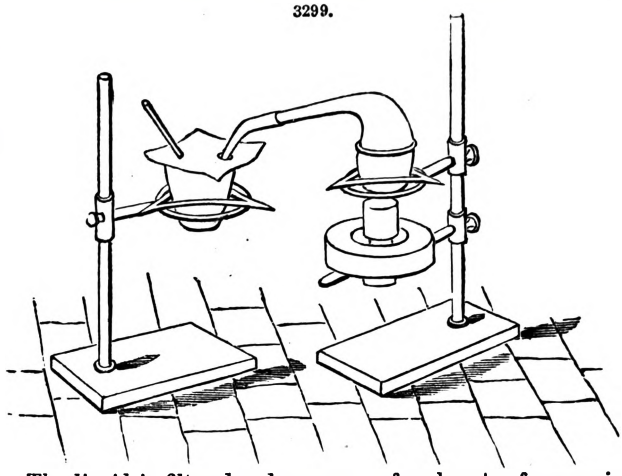

The liquid is filtered and an excess of carbonate of ammonia added, which precipitates the alumina, the lime, the oxide of iron, a part of the oxide of manganese, and the magnesia; an addition of a small quantity of sulphydrate of ammonia completes the precipitation of the manganese. The liquid, when filtered, contains only the alkaline salts, a small quantity of magnesia, and salts of ammonia; it is evaporated to dryness, the residue calcined at a strong red heat, and the alkaline bases are weighed in the state of sulphates. The magnesia is overlooked for the moment, until the termination of the analysis; the potassa is separated by perchloride of platinum, and the soda is determined by calculation from the difference obtained. The magnesia must be sought in the solution remaining after the precipitation of the double chloride of potassium and platinum. The platinum is then precipitated by sulphydrate of ammonia, and the liquid, filtered with an excess of carbonate of soda, is evaporated; the carbonate of magnesia is then separated by treatment with water. This base may also be precipitated by phosphate of ammonia. A much better method of separating the magnesia from the alkalies is the following, when the bases can easily be obtained as chlorides;—The liquid containing magnesia and the alkalies is evaporated to dryness in a platinum crucible, after having condensed its volume by evaporation in a porcelain capsule, out of which the very concentrated solution is carefully washed, with as little water as possible, into the platinum vessel; a small quantity of pure red oxide of mercury is then added, and the crucible subjected to a strong white heat over a spirit lamp, until all the mercury is volatilized. Care must be taken not to inhale the fumes. The magnesia, then all remaining as insoluble caustic magnesia, is separated by filtration from the alkalies, which then may be determined by weighing them together, determining the potassa by precipitation with chloride of platinum, and finding the weight of the soda by the difference. Phosphate of soda, with the addition of some ammonia, effects the precipitation of magnesia much more perfectly than phosphate of ammonia.

GOLD. Fr., *Or;* Ger., *Gold;* Ital., *Oro;* Span., *Oro.*

Gold is found almost over the whole globe, but in most cases in small quantities compared with other metals. At the present time California affords the largest amount of this metal in the world. Gold is chiefly found in its native condition, in a metallic state, alloyed with silver, and sometimes with tellurium, as is the case in Virginia and North Carolina. In California it is found chiefly in alluvial ground, bedded upon rock in most cases; it is also found enclosed in quartz rock, apparently in veins ramifying the rocks of an extensive mountain range. This California gold is obtained chiefly in large grains, and often in lumps of several pounds weight. In the other States of the Union the gold is in very minute fragments, often invisible to the eye if not aided by a lens, only to be detected by crushing and grinding the rock, and washing off the débris. This gold is apparently derived from the decomposition of iron and copper pyrites, chiefly the first; which assertion cannot be objected to, because it is founded in principle that almost all iron pyrites contain gold, that the gold ores of that region are rocks which are coloured by iron, and that this iron is evidently derived from the decomposition of the pyrites. Pyritous ores of this kind are worked which contain no visible gold, or which do not yield gold at the first crushing and washing, but which furnish gold in a succession of amalgamations, performed after regular intervals of exposure to the air in a fine powder.

A splendid yellow colour and brilliant metallic lustre characterizes gold distinctly from other metals; its specific gravity being 19·3 to water, is another quality easily appreciated by the senses. It is pre-eminently ductile, which qualifies it for an extensive use in the arts. One grain of gold may be drawn into a wire 500 ft. long: silver may be coated with gold, of which the thickness is only the twelve-millionth part of an inch, and still the microscope cannot detect the slightest indication of an interruption of the gold coating. Pure gold requires more heat for melting than either silver or copper, but as all native gold is alloyed with some other metal, it may be considered more fusible than those metals. If, in cupelling gold, the hot globule shines with a greenish light, we may consider the gold not much adulterated; if it contains 10 per cent., or from there to one-third of silver, the colour of the gold is in the hot cupel white as silver. Pure gold is not very

volatile, and may be exposed to a strong heat for a long time without loss of metal; but if gold is alloyed with volatile metal, such as lead, zinc, and antimony, it is liable to be carried off by their vapours. Gold has a considerable cohesion, which inclines it to crystallization. Its crystal form is an octahedron; it is often found in fragments of crystals imbedded in quartz. In melting gold along with pure borax it assumes a whitish colour, as if adulterated with silver; in melting it again with saltpetre, or common salt, it recovers its rich yellow colour.

The geological position of gold is in the primitive rock. It is found in granite, disseminated in grains and spangles through the mass of rock. In the United States gold is chiefly found in the stratified transition series. Most of the gold, the California gold exclusively, is found in alluvial soil. In the Southern gold region this source is much exhausted, and the gold is here obtained from regular, well-developed veins, running parallel with the general direction of the rock strata, south-west by north-east. The plane of inclination of these veins is also parallel with the plane of inclination of the general formation. It appears from this that the gold-bearing veins are of a simultaneous origin with the rock; at least, they have been introduced when the rock was in a plastic condition. In Virginia and North Carolina the gold-bearing veins are a ferruginous talcose slate, often inclined to mica slate. In North Carolina this slate is found to be very hard in many instances, showing a compact solid mass of rock, apparently the same slate; but having been under the influence of a considerable heat, it is hardened. In Virginia this slate is more soft, the fissures open more readily, and the whole vein shows the appearance of soft slate. This slate is impregnated with small quartz veins, from $\frac{1}{8}$ to $\frac{1}{2}$ an inch, and often 2 in. thick. Where these quartz veins are thin and in great numbers, the ore is always found to be richest in gold. The vein-stone of the gold-bearing veins is strongly impregnated with oxide of iron, showing evidences that this iron is derived from pyrites, because the oxide appears in dots or flowers, and groups of dots. Many of these veins have been traced to that depth where the pyrites are not oxidized; here they appear in their perfect crystal form, and are profusely distributed through the slate. The oxidation of these pyrites appears to depend on the penetrability of the rock by atmospheric agents; where the slate is soft we find it oxidized to the depth of from 50 to 150 ft.; where the slate is hard, as is the case at the Sawyer Mine, North Carolina, the oxidation reaches hardly 10 or 20 ft. deep, and is in many places, such as bluffs, not developed at all. At the latter spots the pyrites are in their original form, untouched by oxygen. Where the pyrites are not oxidized, the extraction of gold is connected with considerably more expense than it is from soft slate and oxidized pyrites. The crushing of the hard slate is in the first place more expensive; the sulphur of the pyrites destroys a large portion of quicksilver in amalgamation, and the gold cannot be all extracted; the largest portion of it remains enclosed by the sulphuret of iron, which can only be liberated by destroying that envelope.

There is, however, one drawback to the rapid extraction of gold from deposits—the ores are all, without exception, pyritous in greater depth, and to work these sulphurets to advantage no progress has been made up to this time. Various experiments tending to accomplish this purpose, and affording means of extraction, have been tried, but none of these succeeded so far as to work the poorer class of ores. At Goldhill, N.C., where the ores yield from \$1.50 to \$3 of gold in 100 lbs. or one bushel of ore, the pyritous ores are ground, amalgamated, and a certain portion of gold extracted. The crushed ore, now a fine sand, is exposed to the influence of the atmosphere for one year, after which the process of grinding and amalgamating is repeated, and another portion of gold, almost equal to the first, is extracted. An exposure of another year furnishes another crop of gold, which operation may be repeated four or five times without extracting all the metal from the sand. This way of working is tedious, expensive, and will not answer where the ores yield but 25 cents to the bushel. The process of roasting these ores by artificial fire is too expensive, and all processes which require much labour are out of the question.

The extraction of gold is performed in California, and also in some parts of the Southern States, simply by washing the alluvial soil, removing the sand, clay, and débris of rock; after these operations the gold, as specifically the heaviest matter, will remain in the vessel in which the washing has been performed. This washing may be done to advantage in a tin pan or a sheet-iron pan. Such a pan is filled with sand containing the gold, and immersed in water; in stirring it gently by hand the clay and light sand flow off, and, after some of the earthy matter is removed, the pan is shaken so as to bring the heavier gold to the bottom of it; the superstratum of sand is now removed, and the gold found in the bottom of the pan (see p. 265).

Gold enclosed in rocky matter cannot be washed with success in the foregoing described manner; the rock must be crushed, and is, in this operation, transformed into more or less fine sand. The bulk of this sand is removed by washing, and the rest, with the gold, reserved for amalgamation.

The crushing is performed in the stamp-mill (p. 272).

After the crushing is performed, the sand, including gold, is conducted over hides, which retain the gold, and the sand is floated away. The gold and sand from the hides are removed, when the latter are filled, to an amalgamating machine, which combines the gold with quicksilver, and admits the sand to flow off. Instead of hides, woollen blankets are also used for gathering the gold, and there is a diversity of opinions as to the merits of either. Blankets, it is contended, are more expensive than hides, but they have the advantage of working more uniformly. Hides are cheaper, but they lose their hairs or wool very soon, and are then not fit to do good work. Hides of short, curly wool are selected; these are spread on the ground, and over these the water, sand, and gold are led in a broad sheet. In other instances, shaking tables are suspended at the discharge of the stampers, which gather the gold and some sand. Shaking tables are wooden platforms of 8 or 10 ft. long, and from 3 to 4 ft. wide, made of 2-in. plank well joined together, and the whole smoothly planed. Around the edges of the table are projecting ribs, which prevent the water from flowing over the edges. In suspending this table, a little inclined to the horizontal, leading the sand and water over it in a broad sheet, and applying a gentle shaking motion to it, the gold will sink to the bottom and move gently down the plane; it is arrested at the lowest end of the table

by a projection on the table. In either of the above cases the gold is brought to the amalgamating machine for amalgamation.

Most of the gold-mining establishments are provided with Chilian mills for crushing the ore. There are some machines of this kind in North Carolina, which work by four or five runners or crushers in one trough.

In Fig. 3300 such a machine is represented as it is in operation at Goldhill. It is a cast-iron circular trough of about 16 ft. diameter, 10 in. wide, and 6 in. deep; the trough is firmly fixed upon the floor of the mill. In this trough five travellers, or head-stones, are moving, of 3 ft. diameter and 6 in. thick, rounded on the edge, made of cast iron. These travellers are fixed to the revolving shaft in the centre, and are moved by it. The circular trough is supplied with coarsely-broken ore and a constant current of water, which latter washes off all the light impurities, and leaves the gold in the trough. At the close of every day's work the trough is supplied with some quicksilver, which is worked in it for ¼ or ½ hour's time, in which time it absorbs the gold, and is then removed as amalgam. The water from these mills is generally conducted into other machines, in which some of the fine gold which passes from the first machine is gathered. In most cases a shallow round basin, of about 4 ft. diameter, is appended, in which a rake moves around with a vertical axis, gently stirring the sediment which may settle from the passing water. It retains only the heavy particles. In other instances Sullivan bowls (a small machine which derived its name from the inventor) are appended; these gather the heavy parts which may escape the previous machines.

3300.

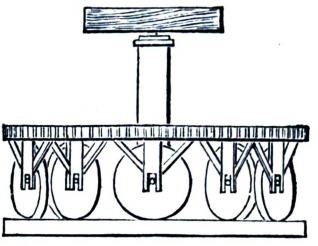

A Sullivan bowl is represented in Fig. 3301. A vertical wooden shaft, of about 18 in. long and 2 in. square, carries on the lower part a shallow vessel or bowl B, about 2 in. deep and 18 in. in diameter. This bowl is formed of a wooden bottom and sheet-iron periphery. The bowl receives the water from the other machines at or near its circumference, and discharges at the centre. By the lever A the machine is set in a rocking motion, caused by a crank connected with the same. The machine gathers a great deal of fine gold, but it is an expensive machine, because it works but little water, and it requires many machines to do the work of a small establishment.

3301.

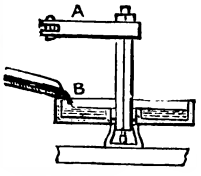

3302.

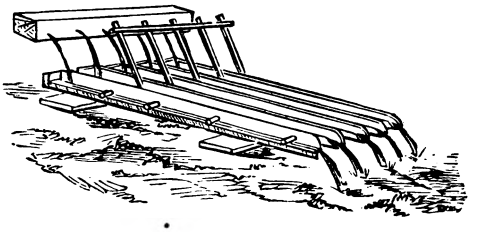

The gold from the various machines, mixed with some sand and other impurities, is carried to the Chilian mill for amalgamation, in case there is no other machine for doing that work. This is an imperfect machine for amalgamation, and causes losses in quicksilver and gold. In most cases separate machines are used for amalgamation; in North Carolina the cradle is generally employed. The cradle is made from the trunk of a tree, hollowed out so as to form a round trough, closed at one end and open at the other, as represented in Fig. 3302.

Here is a battery of five cradles represented; as many as that are frequently connected and moved by a little boy. A cradle is from 10 to 12 ft. long, hollowed out of a trunk of at least 24 in. diameter. The bottom part is thicker than the sides. The first cradle in the drawing shows a section. We see here three or more grooves carved in the bottom; in each of these grooves from 3 to 4 lbs. of quicksilver are put. At the farthest end sand is shovelled in and water led upon it, the cradles being a little inclined towards the discharge. A gentle current of water will have a tendency to wash sand and everything else down the trough, the trough being, in the mean time, in a rocking motion, which assists the water in washing off everything. The quicksilver in the grooves is also in constant motion, by which the heavy granules of gold gliding down on the bottom are arrested by it, while the lighter matters, as sand, &c., are not attracted, and pass over the mercury. These machines are very effective, but work slow, and lose much of the fine suspended gold. Other amalgamating machines have recently been put in operation; their efficacy is, however, not settled, and we hesitate to describe them. In North Carolina the German barrel amalgamation has been introduced within a few months, but we are not informed of the results. In Virginia, amalgamating machines of novel patterns have been tried, but we are not acquainted with their effects.

All amalgamating machines suffer under a common evil—they cannot work all the water, as it issues from the crushing machines, to advantage. In all instances half the golden contents of the ore are lost. This is owing partly to the clayish condition of the ore, which clay encloses particles of gold, and carries it off, and partly to the extreme division of the gold in the ores of these regions, particularly in North Carolina. This minute division causes the gold to be suspended in water, and in that condition it is carried away by the current. A good amalgamating apparatus, which will work the water directly from the crushing machines, rub off clay and other matter from the

particles of gold, so as to make it adhere to the quicksilver, and which does not lose any quicksilver, is still a desideratum in the Southern gold-mining districts.

Gold gathered by quicksilver forms a white amalgam. In the amalgamating machines a surplus of quicksilver is used to secure the fluidity of the mercury; for if it gets slimy, or, still worse, plastic, like clay, it will not absorb any more gold with facility. The fluid amalgam is pressed through a soft leather or a piece of close canvas, to remove the superfluous mercury, after which a solid amalgam, called quick, remains in the bag. The quicksilver which passes through the bag retains always some gold in solution, the quantity of which varies according to the stuff through which it has been squeezed. The amalgam thus obtained contains from 30 to 70 per cent. of gold, according to the mode of working and the quality of the ore. The quick from the Chilian mills generally contains but from 30 to 40 per cent. of gold, while that from stampers contains seldom less than 40, and in most cases from 50 to 60 per cent. of gold. This circumstance appears to speak in favour of the stamps; the difference in the contents of gold, in the amalgam, is owing to its division; the finer the gold, the less of it the amalgam contains. The dry amalgam is distilled in an iron retort, lined with clay; a red heat will drive off the mercury, which is condensed by leading it into cold water. The gold remains in the retort in the form of a powder, which is collected, melted in a crucible along with some saltpetre, and cast into iron moulds, forming square bars of about 1 lb. weight each. One pennyweight of gold of the Virginia mines is generally worth from 90 to 92 cents. North Carolina gold contains more silver than the first, and a pennyweight is seldom more than 90, and in the majority of cases from 80 to 90 cents to the pennyweight. California gold ranges from 75 to 90 cents.

The gold in gold coin and jewellery is never pure, being alloyed with a certain quantity of copper and frequently of silver, to give it a greater degree of hardness. In order to obtain pure gold, gold coin is dissolved in aqua regia, and the solution being evaporated to dryness, by gentle heat, to drive off the excess of acid, the residue is treated with water, by which means the silver is separated as insoluble chloride. An excess of protosulphate of iron, which precipitates the gold in the metallic state, in the form of brown powder, is then poured into the liquid, the reaction ensuing according to the following equation;—$Au_2Cl_3+6(FeO,SO_3)=2Au+2(Fe_2O_3,3SO_3)+Fe_2Cl_3$.

The precipitate is digested with weak chlorohydric acid, and, after being well washed, is fused in an earthen crucible with a small quantity of borax and saltpetre. The protosulphate of iron may be replaced by sesquichloride of antimony Sb_2Cl_3 dissolved in an excess of chlorohydric acid; the sesquichloride of antimony being converted into the perchloride Sb_2Cl_5, while the gold is precipitated in the metallic state.

Gold has a characteristic yellow colour, and its density is 19·5. It fuses at a strong white heat, or at about 2200° of the air thermometer, giving off sensible vapours at a very high temperature. A gold wire is converted into vapour when traversed by the current of a powerful electric battery; and if this take place over a sheet of paper placed at a small distance, the paper becomes coloured of a purplish brown, by the very finely divided gold which is precipitated on it. A blade of silver substituted for the paper soon becomes gilded. A globule of gold gives off vapour very copiously when held between two pieces of charcoal terminating the conductors of a powerful galvanic battery.

Gold is the most malleable of all the metals, and when beaten into very thin leaves is transparent, the transmitted light appearing of a beautiful green colour. Gold may be crystallized by fusion, when it assumes the shape of cubes modified by other facets of the regular system. Native gold is sometimes found in well-defined crystals presenting the same form.

When precipitated in a metallic state from its solutions, gold forms a brown powder, which by burnishing soon recovers the metallic lustre and characteristic colour of malleable gold, and which aggregates by percussion. If the mass be heated to redness before being hammered, a perfectly aggregated metal can be obtained without having heated it to fusion.

Gold does not combine directly with oxygen at any temperature. Chlorohydric, nitric, and sulphuric acids do not affect it, while aqua regia, on the contrary, readily dissolves it in the state of sesquichloride, Au_2Cl_3. Gold is also dissolved by chlorohydric acid when a substance capable of disengaging chlorine is added, such as peroxide of manganese, chromic acid, &c. Chlorine and bromine also attack gold, even when cold, while iodine acts on it but feebly.

Sulphur does not attack gold at any temperature, nor does the metal decompose sulphydric acid; but by fusing it with the alkaline polysulphides it is powerfully acted on, a double sulphide being formed, in which the sulphide of gold Au_2S_3 acts the part of a sulphacid. Arsenic when assisted by heat combines with gold, and forms a very brittle alloy.

Gold is attacked neither by the alkalies nor the alkaline carbonates or nitrates.

Compounds of Gold with Oxygen.—Two combinations of gold with oxygen are known;—

1. A suboxide Au_2O,
2. A sesquioxide Au_2O_3,

neither of which forms salts with the oxides.

The suboxide Au_2O is obtained by decomposing the chloride Au_2Cl by a dilute solution of potassa, in the shape of a deep violet-coloured powder, which decomposes at about 77°, disengaging oxygen. The oxacids exert no action on this substance, while chlorohydric acid decomposes it, forming sesquichloride of gold Au_2Cl_3, while metallic gold is separated.

Sesquioxide of gold (often called *auric acid* on account of its property of combining with bases) is prepared by digesting a hot solution of sesquichloride of gold with magnesia, when aurate of magnesia is formed, which remains mixed with the free magnesia. The deposit is boiled with nitric acid, which dissolves the magnesia and leaves hydrated sesquioxide of gold. Auric acid may also be obtained by saturating a solution of sesquichloride of gold by carbonate of soda, and then boiling the liquid, when a large proportion of the gold is precipitated in the state of sesquioxide, while the other portion remains in solution, but may be precipitated by successively adding to the liquid an excess of caustic potassa and acetic acid.

Hydrated auric acid is a yellow or brown powder, which loses its water at a low temperature and becomes anhydrous, while at about 482° it decomposes into gold and oxygen, which reaction is also effected by the solar light. Deoxidizing substances, such as the organic acids, or boiling alcohol, reduce it to the metallic state; while chlorohydric acid dissolves it and produces the sesquichloride Au_2Cl_3. The most energetic oxacids do not form definite compounds with sesquioxide of gold, while the latter dissolves, on the contrary, readily in cold alkaline solutions, producing alkaline aurates which crystallize by evaporation.

By adding a small quantity of ammonia to a solution of sesquichloride of gold, a fulminating substance is produced, which contains, at the same time, oxide of gold, ammonia, and chloride, and which, by digesting with an excess of ammonia, furnishes a bright brown powder of still higher detonating properties than the first, and which is a simple combination of sesquioxide of gold with ammonia $Au_2O_3+2NH_3+HO$.

Compounds of Gold with Sulphur.—Although sulphur does not combine directly with gold, two sulphides corresponding to the two oxides are obtained by decomposing the sesquioxide of gold by sulphydric acid, which, on being passed through a cold solution of sesquichloride of gold, yields a brownish-yellow precipitate, which is the sulphide Au_2S_3, readily soluble in the alkaline sulphides. If the solution of the chloride is boiling, a sulphide Au_2S, of a deep-brown colour, is precipitated, while sulphuric and chlorohydric acids are formed $2Au_2Cl_3+3HS+3HO=2Au_2S+6HCl+SO_3$.

Compounds of Gold with Chlorine.—By dissolving gold in aqua regia a yellow solution of sesquichloride of gold Au_2Cl_3 is obtained, which, when allowed to evaporate slowly in dry air, deposits yellow crystals of a compound of sesquichloride of gold and chlorohydric acid. If the solution be evaporated to drive off the excess of acid, the substance assumes a brown colour, and a deliquescent crystalline mass remains, which dissolves readily in alcohol and in ether. Sesquichloride of gold dissolves even more rapidly in ether than in water; for, if an aqueous solution of the chloride be shaken with ether and water, the supernatant of ether contains nearly all the chloride of gold in solution. The solution of sesquichloride of gold in ether was formerly used in medicine under the name of *aurum potabile.*

Sesquichloride of gold forms with other metallic chlorides double crystallizable chlorides, in order to obtain which it is sufficient to mix and evaporate the solutions of the two chlorides. The formula of the double chloride of gold and potassium, which is deliquescent, is $KCl+Au_2Cl_3+5HO$, while the formula of that of gold and sodium is $NaCl+Au_2Cl_3+4HO$, and that of the double chloride of gold and ammonia is $NH_3HCl+Au_2Cl_3+2HO$. Compounds of chloride of gold with the chlorides of barium, calcium, manganese, iron, zinc, &c., are also known.

Subchloride of gold Au_2Cl is prepared by heating the sesquichloride of gold Au_2Cl_3 to a temperature of about 400°, when chlorine is disengaged, while a greenish insoluble powder remains.

Compound of Gold with Cyanogen.—By adding a solution of cyanide of potassium to a concentrated hot solution of perchloride of gold, until the liquid loses its colour, a solution is obtained, which, on cooling, deposits prismatic crystals of a double cyanide of gold and potassium of the formula $KCy+Au_2Cy_3$. The crystals, which are efflorescent and very soluble, disengage cyanogen when subjected to moderate heat; and when treated with water, a solution is obtained, which, on cooling, deposits a double cyanide of the formula $KCy+Au_2Cy$.

The name of *purple of Cassius* is given to a precipitate containing gold, tin, and oxygen, which is used by painters on porcelain and glass, and is prepared in various ways. Its composition not being always uniform, chemists are not yet agreed upon its nature. It is generally obtained by pouring into a sufficiently dilute solution of sesquichloride of gold, a mixture of protochloride and bichloride of tin, the precipitate showing a beautiful purple hue when it is of small bulk, while it assumes a brown colour when more copious.

A purple of Cassius of uniform composition is prepared by dissolving 20 grammes of gold in 100 grammes of aqua regia made of 20 parts of nitric and 80 of chlorohydric acid; driving off the excess of acid by evaporation in a water-bath and dissolving the residue in 7 or 8 decilitres of water. Some pieces of tin being placed in the liquid, a purple precipitate of the formula $Au_2O,SnO_2+SnO,SnO_2+4HO$ is formed, but which may also be considered as $2Au+3SnO_2+4HO$. The substance, on being subjected to heat, evolves water alone and no oxygen, while the calcined residue presents all the characters of a mixture of metallic gold and stannic acid. But as before calcination the substance will not give off gold to mercury, it is evident that the gold did not exist in it in the metallic state.

A beautiful purple of Cassius is obtained by heating suboxide of gold Au_2O with a solution of stannate of potassa.

Lastly, purple of Cassius is obtained by fusing together in a crucible 1 part of gold, ½ part of tin, and 4 or 5 of silver, forming a ternary alloy, from which nitric acid extracts the silver, while the gold and tin are precipitated in combination with oxygen, and a brilliant purple is formed, the shades of which can be changed by altering the relative proportions of gold and tin.

A solution of sesquichloride of gold stains linen of a purple colour, as it also does the skin and the organic tissues generally, which colouring is probably owing to suboxide of gold, as friction does not restore a metallic lustre to the spots, although they acquire it in a short time when exposed to solar light in a bottle filled with hydrogen gas.

Determination of Gold, and its separation from other metals.—Gold is always determined in the metallic state, and is precipitated from its solutions by means of protosulphate of iron, after having added chlorohydric acid to the liquid in order to maintain the sesquioxide of iron which forms during the reaction in solution. But it is important, in order to completely precipitate the gold, that the liquid should contain no nitric acid; in which case it must be previously evaporated with chlorohydric acid. The gold, when collected on a filter, is calcined to redness before being weighed.

In order to separate gold from the metals previously described, the insolubility of the metal in nitric acid is sometimes relied on, while at other times all the metals are dissolved in aqua regia, and the gold is precipitated by protosulphate of iron, or, better still, by heating the solution with

a certain quantity of oxalic acid; which latter method has the advantage of not introducing a new metal into the liquid. Gold is sometimes also separated by precipitating it in the state of sulphide, by sulphydric acid gas, the sulphide leaving metallic gold after calcination.

Metallurgy of Gold.—Gold is almost always found in the native state, being sometimes pure, but more generally alloyed with certain quantities of silver. It occurs in three kinds of bearings;—

1. In veins, generally quartziferous, which contain other metallic minerals, as ores of copper, lead, silver, and pyrites; the veins usually traversing the primitive rocks.

2. In small veins scattered through rocks situated at the separation of the crystalline and stratified rocks.

3. In disaggregated quartzose sands, often extensively seen in alluvial formations, and owing their presence to the disintegration of auriferous crystalline rocks which exist in the vicinity. The greater specific gravity of the gold prevents its particles from being carried as far as those of the other minerals with which it is mixed, and its resistance to the action of the greater part of chemical agents preserves it in the state of spangles. Alluvious soils containing gold chiefly occur in open valleys between primitive mountains, where gold is frequently found in place. The principal localities of auriferous sands are in California, Australia, Brazil, Mexico, Chili, Africa, the Ural and Altai Mountains in Siberia—the quantity of gold annually extracted from all of which amounted, in 1851, to 178 tons, of which California alone produced 110. Gold is generally found in the sands in the form of spangles, or shapeless and rounded grains, which, when they are of any considerable size, are called *river* or *wash gold* (pépites). Grains are sometimes found of the size of a hazel-nut, and pieces weighing several kilogrammes have been met with; one lump weighing 36 kilogrammes was found in the Ural. Gold exists in the drift-sand of all rivers which arise from or flow over a large extent of primitive rocks; and several auriferous alluviæ are known in France, such as those of the Ariége in the Pyrenees, of the Gardon in Cevennes, the Garonne, and the Rhine, near Strasburg. It is found in too small quantity to be worked to advantage; but the inhabitants look for it when they would otherwise be idle, and are then called *gold-finders*. The spangles of gold scattered through the river-sand are generally so excessively small that more than twenty are often required to make a milligramme. In Siberia, sands containing only 0·000001 of gold are not considered worthy of being worked; and the Rhenish sands contain, on an average, about $\frac{1}{8}$ of this quantity. Gold exists also, combined with tellurium, in certain mines of Transylvania. An alloy of gold with silver and palladium, in the form of small crystalline grains, occurs in Brazil, and is called *auro-powder* or *auro-dust*. Lastly, all pyrites in primitive rocks contain a small quantity of gold, and are often rich enough to be worked to advantage.

When gold exists in veins which contain other metals, as lead, copper, or silver, those metals in which the gold is concentrated are first extracted from the ores, and the gold is then separated by *refining*, a process presently to be described. The ore is frequently first subjected to amalgamation, as in the case of silver ores, when the gold dissolves in the mercury, and, after the liquid amalgam has been filtered, a more solid amalgam is obtained, from which the gold is separated by distillation. The ore is then smelted, so as to obtain a matt from which a certain quantity of gold can still be extracted.

Auriferous sands are washed in the most simple manner, either in wooden tubs, or on inclined planes over which a current of water flows, and they are then treated by amalgamation. In the Ural, the auriferous sand is poured into boxes, the sheet-iron bottom of which is provided with openings of 2 centimètres in diameter, and, while a stream of water flows through the boxes, the workman stirs the sand constantly with a shovel, when the finer portions fall through the holes and are collected on large sleeping tables covered with muslin. The sand is frequently swept toward the head of the table, where the gold remains with the heavier minerals; and the sand, being enriched by this washing, is again more carefully washed on smaller tables. The titanic iron and magnetic oxide of iron being separated by a magnet, the material is fused in large graphite crucibles, at the bottom of which the gold collects, while the upper part is filled by a slag containing a quantity of unmelted grains of gold. The slag being stamped and washed, the rich schlich thus obtained is smelted, yielding an auriferous lead, from which the gold is separated by cupellation.

In Tyrol a certain quantity of gold is extracted from pyrites by amalgamating them in mills resembling that represented in Fig. 3303, several mills being generally placed above each other. (The figure gives an external view of the upper mill and a section of the lower one.) The pyrites, in the state of an impalpable powder, is suspended in water, and conveyed into the upper mill by the conduit G, whence it flows into the second mill by the sluice G′. The bed of each mill is made of a cast-iron vessel *c d e f*, securely fastened on a strong wooden table; and in the centre of the vessel is a tubulure traversed by an axis of rotation *a b*, set in motion by the cog-wheel *r r′*. The runner-stone *m m′* of each mill is of wood, and resembling the shape of the bed; but being about 2 centimètres smaller, is furnished with several sheet-iron teeth projecting about 1 centimètre. The upper surface of the runner-stone is shaped like a funnel, into which is poured the liquid mud, which passes between the stones and flows out by the conduit G′. The stones make about

3303.

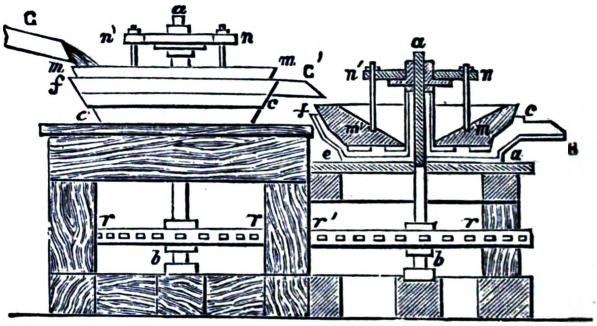

fifteen or twenty revolutions a minute; and 25 kilogrammes of mercury are placed at the bottom of each, making a layer of about 1 centimètre in thickness, against which the teeth of the wheel constantly strike, while at the same time they stir up the ore. The gold is dissolved by the mercury, and, after continuing this process for four weeks, it is withdrawn and filtered through a chamois skin, which retains a solid amalgam containing nearly one-third of its weight of gold, which is then separated from the other metals by cupellation.

Alloys of Gold.—Gold is rarely used in a state of purity, as it is too soft, and its hardness must be increased by the addition of a small quantity of silver or copper, forming more fusible alloys than pure gold.

The standard of French pure gold coin is $\frac{900}{1000}$, the law allowing a variation of $\frac{2}{1000}$ above and $\frac{3}{1000}$ below; while medals contain 0·916 per cent. of gold, with the same variation. There are three legal standards for jewellery, the most common of which is $\frac{750}{1000}$, while those of $\frac{840}{1000}$ and $\frac{920}{1000}$ are rarely used; and the legal variation is $\frac{3}{1000}$ below the standard, no superior limit being fixed.

Gold is soldered with an alloy called *red gold*, of 5 parts of gold and 1 of copper; an alloy made of 4 parts of gold, 1 of copper, and 1 of silver also being used.

The clear colour of gold is given to jewellery by dissolving the copper which exists in the superficial layer; to effect which the articles are heated to a dull red heat, and dipped, after cooling, into a weak solution of nitric acid, which dissolves the copper. A thicker coating of pure gold is obtained by allowing them to remain for fifteen minutes in a paste formed of saltpetre, common salt, alum, and water; the chlorine set free by the action of the sulphuric acid on the salt and saltpetre dissolving the copper, silver, and gold, while the latter metal is again deposited on the article. The surfaces are then burnished.

Separation of Gold and Silver.—The separation of gold and silver, more generally called the *refining of the precious metals*, is now done by treating the alloy by concentrated hot sulphuric acid, which dissolves the silver only. But in order that the alloy may be completely acted on, it should neither contain more than 20 per cent. of gold, nor than 10 per cent. of copper, because sulphate of copper is but slightly soluble in concentrated sulphuric acid. The alloys are fused in crucibles, and when they are too rich in gold, a certain quantity of silver is added—silver containing a small quantity of gold being preferred. The fused alloy is granulated by being poured into water, and then placed in a large kettle with 2½ times its weight of concentrated sulphuric acid marking 66° on the areometer, the kettle being covered with a lid furnished with a disengaging tube. The acid, being heated to boiling, is partly decomposed, and sulphates of silver and copper are formed, while sulphurous acid is disengaged, which is sometimes passed into the leaden chambers where sulphuric acid is manufactured. When gold coin is to be refined, it is merely roasted.

After four hours, when the alloy is completely destroyed, there is introduced into the kettle a certain quantity of sulphuric acid marking 58°, and obtained by the concentration of the acid mother liquid of the sulphate of copper obtained in refining, as will presently be explained. After having boiled the liquid for fifteen minutes, the kettle is taken from the fire and allowed to rest, when the greater part of the gold collects at the bottom of the vessel, from which the nearly boiling liquid is decanted off into leaden boilers containing the mother liquid arising from the purification of the sulphate of copper by crystallization. The boilers are heated by steam; and after the sulphate of copper at first deposited is redissolved, the liquid is allowed to rest for some time, when the whole of the gold is deposited. The clear liquid is then drawn off by a siphon, and passed into other boilers heated by steam, and containing blades of copper, which precipitate the silver in the form of small crystalline grains; the metal being in a short time so perfectly precipitated that the liquid is not clouded by common salt. The precipitated silver is carefully washed, and then compressed by an hydraulic press into compact prisms, which, after being dried, are melted in earthen crucibles, furnishing a metal which contains only a few thousandths of copper.

As the gold arising from the first action of the sulphuric acid still contains a certain quantity of silver, it is heated anew, in a platinum crucible, with concentrated sulphuric acid, which abstracts the balance of the silver; a third treatment with sulphuric acid being often required. The gold dust, after being well washed and fused, contains 995 thousandths of pure gold.

The acid solution of sulphate of copper which arises from the precipitation of the silver by copper is evaporated in leaden kettles until it marks 40° on the areometer; a large proportion of the sulphate of copper being deposited in small crystals during the cooling. After another evaporation, the mother liquid yields an additional quantity of crystals: and the last liquid, which refuses to crystallize, is used as a solution of sulphuric acid, and poured into the cast-iron boiler, after this action on the alloy. The sulphate of copper is purified by recrystallization.

When the quantity of gold and silver contained in an alloy does not exceed 0·200 or 0·300, the granular material is first heated in a reverberatory furnace, when a portion of the copper is converted into oxide, which is dissolved by treating the roasted substance with weak sulphuric acid; and the alloy, being thus brought to the medium standard of 0·500 or 0·600, may be refined by the ordinary process. The process of refining gold pursued at the United States Mint, in Philadelphia, is similar to the method formerly called quartation, and consists in melting gold with silver, and then extracting the silver with pure nitric acid. The deposit of grains of native gold is first melted with borax and saltpetre, occasionally with soda to remove quartz, and being cast into a bar, is carefully weighed, accurately assayed to $\frac{1}{2000}$ for gold, and from the assay and weight the value of the deposit is calculated. Although a million of dollars may be deposited in a day, upon an arrival from California, yet such is the expedition of the assay department, that in a few days the deposits are all paid off. As soon as the gold is assayed, each lb. of it is melted with 2 lbs. of pure silver, and the mixture, after stirring, poured into cold water, by which it is *granulated*, divided into small irregular fragments, presenting a large surface to the subsequent action of the acid. The granulations are then put into large porcelain jars of 50 gallons each, of which there are about seventy in use, and nitric acid poured in them. The jars being placed in leaden-lined wooden troughs, containing water, are heated by a steam coil in the water, causing the nitric acid

to dissolve out the larger proportion of silver. A steam heat is given during several hours, and the liquid allowed to repose until the following morning, when the solution of nitrate of silver is drawn off by a gold siphon, and transferred to a large vat of 1200 gallons, containing a saturated solution of common salt. Fresh acid is then added to the gold in the pots, already nearly parted, steam heat applied again for several hours, and the whole left again to repose. On the following morning the acid liquid of one of the pots being drawn off and the fine gold removed to its filter, fresh granulations of gold and silver are introduced, and the acid liquid of the adjoining pot, containing only a small quantity of nitrate of silver, poured over it. A fresh charge of granulated metal is thus first worked by the yet strong acid, which acted on the nearly fine gold of the previous charge. A charge of $800,000 or more is easily worked off, *refined*, in two days, by 4½ lbs. of parting acid to every lb. of gold. The gold is washed thoroughly on a filter by hot water, pressed in a hydraulic press, further dried, melted with copper, and cast into bars, about 2400 ozs. troy constituting a melt. After being assayed, they are then remelted with the calculated quantities of copper or fine gold requisite to bring them to a standard of 900 thousandths fine, and cast into ingots. Upon their proving correct in the assay, usually to within $\frac{1}{1000}$ of the standard, they are delivered to be coined. The chloride of silver, accurately precipitated with a slight excess of salt, is filtered and washed thoroughly on large filters, of 3 ft. by 5 ft., and 1¼ in. deep. It is then transferred to lead-lined wooden vats, reduced to metallic silver by granulated zinc, and, the excess of zinc being removed by sulphuric acid, washed, pressed in the hydraulic press, dried by heat, and remelted with a new portion of gold.

This method of parting formerly required 3 parts of silver to 1 part of gold, and the latter constituting a fourth part of the alloy, the process was termed *quartation*. We have, however, found that 2 parts of silver to 1 part of gold are quite sufficient; and if the metal be well granulated, the acid will not leave 10 thousandths of silver in the gold, which is sufficient to prevent the too darkening effect of copper in the coin.

Analysis and Assaying of Alloys of Gold.—Alloys of gold and copper may be analyzed by cupelling them with lead, and following exactly the same process as described for the cupellation of alloys of silver and copper. If the alloy contains no silver, the weight of the lump obtained represents pretty exactly the quantity of pure gold which existed in the alloy; but if, as more frequently happens, the alloy contains a certain proportion of silver, this latter metal remains alloyed with the gold after the cupellation. However, the process of direct cupellation is attended with surpluses and losses which sometimes reach 3 thousandths. When the temperature of the muffle is very great, there is a small loss arising from the absorption of a small quantity of gold by the cupel; and when the heat is too low, the gold retains a small quantity of copper and lead; although gold loses less by volatilizing than silver.

In order to determine exactly the quantity of gold existing in a ternary alloy of gold, silver, and copper, it is cupelled at a moderate heat with a certain quantity of silver and lead, in order to obtain an alloy of silver and gold, from which the latter can be perfectly separated by means of an excess of nitric acid, which dissolves the silver and leaves the gold pure. In order, however, to ensure exact results, there must be a certain ratio between the quantities of gold and silver; because, if the proportion of silver be too small, the nitric acid does not dissolve it entirely; and if, on the contrary, the quantity of silver be too great, the silver and copper are completely dissolved, while the gold separates in the form of powder, which it is difficult to collect without loss. Experience has shown that the most favourable conditions for the assay, commonly called the parting (*départ*), consist in reducing the alloy to ¼ of gold and ¾ of silver, in which case it is completely acted on, while the separated gold preserves the form of the original alloy, and does not become divided, if the operation be carefully conducted. This operation has received the name of *quartation*.

The proportion of lead to be added, which varies with the standard of the alloy, is indicated in the following Table;—

Standard of gold alloyed with copper.	Quantity of lead necessary to be added. to entirely remove the copper by cupellation.
1000 thousandths	1 part.
900 „	10 parts.
800 „	16 „
700 „	22 „
600 „	24 „
500 „	26 „
400, 300, 200, 100 „	34 „

Let us suppose that the standard of a piece of coin is to be determined, the legal standard of which, which may be regarded as its approximate standard, is $\frac{900}{1000}$. The quantity of alloy usually operated on being 0·500 gramme, containing according to the legal standard 0·450 gramme of gold, therefore 1·350 gramme of silver and 5 grammes of lead must be added. But if an alloy is to be assayed, the legal standard of which is entirely unknown, the first step is to ascertain the latter by approximation, by means of the *assay by the touch-needle*, about to be described, after which the process is continued as usual.

The lead is first placed in the heated cupel, and when it is in fusion, the mixture of gold and silver is introduced, having been previously weighed and wrapped in a piece of paper. The cupellation is allowed to go on as usual, and requires less care than the cupellation of silver, because silver alloyed with gold is not liable to blister; but the cupel should be removed immediately after the lighting, to avoid loss by volatilization. The lump is removed after cooling,

flattened under a hammer, annealed for a few moments, and then rolled between cylinders; after which the sheet thus obtained is rolled into a spiral form, and subjected to the action of nitric acid in a small assayer's flask, Fig. 3304, into which 30 grammes of nitric acid of 22°, Baumè's *Hydrometer*, are poured, and boiled for twenty minutes. The acid is then decanted and replaced by 30 grammes of pure concentrated nitric acid marking 32°, which is boiled for ten minutes; when the acid is decanted, and the gold, which has preserved the shape of the alloy, washed several times. The flask being afterward completely filled with water, its mouth is closed with the thumb, and it is inverted, when the spiral sheet of gold falls slowly through the liquid column, and is received in a small earthen crucible, after which the water is poured off, and the crucible heated to redness in the muffle.

3304.

The acid should not be too concentrated, because the gold might be divided. When the assay has been made with the precautions indicated, the gold remains in the form of a spongy, brown, and very friable mass, of nearly the same volume as the original alloy; but it contracts considerably when heated in the small crucible, becoming harder and assuming the lustre and colour of malleable gold. The calcined gold being exactly weighed, the standard of the alloy is thus obtained within nearly 1 thousandth.

Direct assays made on known alloys of gold and silver have shown that the operation, when carefully performed, as just described, can give rise only to the following errors;—

True standards of the alloy.	Standards found.	Differences.
900	900·25	+0·25
800	800·50	+0·50
700	700·00	0·00
600	600·00	0·00
500	499·50	−0·50
400	399·50	−0·50
300	299·50	−0·50
200	199·50	−0·50
100	99·50	−0·50

The assay just described cannot be applied to fine jewellery, because the article would be destroyed by the process, and gold jewellery is therefore subjected to a test called the assay by the touch-needle, which does not injure it, and yet enables a skilful assayer to determine its standard within nearly 1 thousandth. The method consists in rubbing the object against a very hard black stone, on which it leaves marks, from the colour of which, and their behaviour when moistened with a mixture of nitric acid of a density of 1·34 with 2 per cent. of chlorohydric acid, the assayer forms an approximate opinion of the standard of the alloy. The black stone used, called *touch-stone*, is a kind of quartz, coloured with bitumen, which formerly was imported from Lydia, but has likewise been found in Bohemia, Saxony, and Silesia. The conditions essential to a good touch-stone are;—An intense black colour, incapability of being acted on by acids, hardness, and a sufficient degree of roughness to retain some of the gold.

The assayer is provided with a series of small blades, called *touch-needles*, consisting of alloys of copper and gold, the standard of each of which is exactly known, which enable him to compare the marks they leave on the touch-stone, before and after the action of the acid, with that of the alloys to be assayed.

No regard should be paid to the first marks left by the articles on the touch-stone, as they are made by the superficial layer, and always show a higher standard, because the surface consists of pure gold; and several marks should therefore be made, the last of which only is examined. Alongside of these marks others are made with that touch-needle the composition of which approaches nearest to that of the article; when a glass rod, dipped in the acid, is drawn over both, after which the colour of each mark and the manner of action of the acid are examined.

See Alloys. Amalgamating Machine. Amalgamation Pan. Assaying. Atomic Weights. Batea. Battery. Boring and Blasting. Buddle. Drainage. Electro-metallurgy. Founding and Casting, p. 1551. Furnace.

Works on Gold: — J. Calvert, 'The Gold Rocks of Great Britain and Ireland,' 8vo, 1853. S. Davison's 'Gold Deposits in Australia,' 8vo, cloth, 1861. J. Arthur Phillips, 'The Mining and Metallurgy of Gold and Silver,' royal 8vo, 1867. Silversmith, 'Handbook for Miners,' 12mo, New York, 1868. R. B. Smyth, 'The Gold Fields of Victoria,' 4to, Melbourne, 1869. W. P. Blake, 'The Production of the Precious Metals,' 8vo, New York, 1869. Von Cotta, 'Treatise on Ore Deposits,' by Prime, 8vo, New York, 1870. P. M. Randall, 'The Quartz Operator's Handbook,' 12mo, 1871.

GONIOMETER. Fr., *Goniomètre;* Ger., *Goniometer;* Span., *Goniómetro.*

3305.

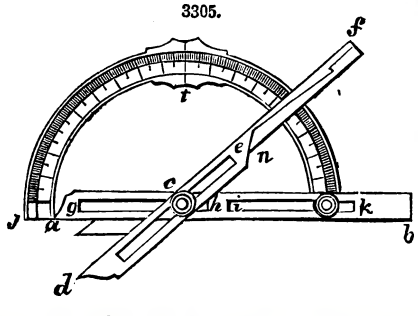

Various instruments termed goniometers are employed in the measurement of the angles of crystals. Two kinds are in use—the common or contact goniometer, and the reflecting goniometer. The first class only of instrument is here described, as it will sufficiently answer every purpose of the mining mineralogist. The most simple form of instrument, Fig. 3305, consists of a graduated brass semicircle, on which two metallic cross-blades are fixed. One of these cross-blades, *a b*, is fixed at the zero of the division; the other, *d f*, is movable, and denotes on the circle the angle of the crystal. In order to measure a dihedral angle, one of its faces is

applied to the fixed cross-blade $a\,b$, in such a manner that the edge of the angle is perpendicular to the plane of the circle; the movable cross-blade is then adjusted until its prolongation rests upon the outer face of the angle. It is evident that the angle comprised between the two cross-blades, and which is directly indicated on the circle, is the measure of the angle sought.

The two cross-blades $a\,d$, $d\,f$, slide in the grooves i K, $g\,h$, $d\,n$, so as to admit of the ends $c\,a$ and $c\,d$ being made as short as is required. This condition is indispensable, as it is often necessary to measure very small crystals, which can only be introduced easily between the two cross-blades when their free ends can be very much shortened.

This form, however, of the common goniometer has many inconveniences. The observations are rendered difficult from the fact that the crystal under examination has to be held with one hand, and the instrument with the other. Moreover, in holding it before the eye, to ascertain if the cross-blade is in perfect contact with the crystal, continual vacillations and disturbances are produced, which render anything like a correct observation very difficult. These inconveniences are overcome by the use of a fixed instrument. The crystal under examination is also fixed on a support, so that both hands are at liberty. This instrument, Fig. 3306, consists of a semicircle

3306.

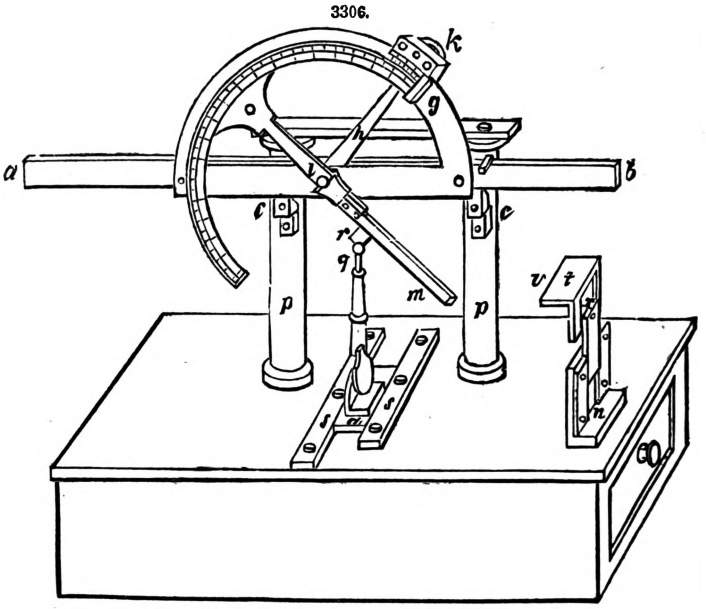

fixed on a rod $a\,b$, supported by columns $p\,p$. The rod $a\,b$ can be moved horizontally, from right to left, in the grooves $c\,c$, in which are placed small friction rollers, so as to render the movement as easy as possible. The fixed semicircle carries another, $f\,g$, movable on the centre o, and divided into degrees; $h\,i\,k$ is a vernier which also moves on the centre, but behind the movable semicircle between it and the fixed, to which it can be at any time fastened, and in any required position, by the thumb-screw k; this vernier gives the minutes. $l\,m$ is a blade whose movement carries round the circle $f\,g$; q is a small stem, the function of which is to support the crystal r, which is firmly fastened with wax. It is so arranged that it can be lengthened or shortened, be inclined either from or towards the operator, and capable of turning on itself. It is supported on a small movable platform u, running between the rods $s\,s$, which form a groove. The piece $t\,v$, seen on the side of the apparatus, is a sight, which, applied against one of the rods s, when the platform is drawn sufficiently forward, enables the operator to judge if the edge formed by the two faces of the crystal is exactly horizontal, and if it be perpendicular to the plane of the circle.

To measure a crystal it must be firmly fixed on r, and the movable platform brought forward; the sight must now be placed against the rod s, and the upper part raised or lowered as needed; looking from above, it can be seen whether the edge of the crystal is parallel to the edge v, in which case it is perpendicular to the plane of the circle. If the parallelism be not perfect, the rod q is turned on its axis until the proper position is attained. The crystal must then be viewed through the opening x, and the same angle adjusted horizontally, which can be effected by inclining the rod either one way or the other as required

When the crystal is properly adjusted, the movable platform is pushed under the circle. The blade $l\,m$ is now to be moved, and at the same time the rod $a\,b$ is to be pushed either to the right or left as may be found necessary, so that the edge of the blade may be in perfect juxtaposition with the face of the crystal; when this has been accomplished, the vernier is carried to the end of the movable semicircle, where a small cleat stops it exactly at zero; it is then fixed by the screw k.

This done, the platform is drawn from under the circle, and the blade passed in the contrary direction to that which it before occupied; the platform replaced, and the blade brought into juxtaposition with the other face of the crystal; this accurately done, the stem and crystal are removed.

By this second application of the blade to the crystal the semicircle has turned, and the point where it stops indicates the measure of the angle, which is read on it in degrees; the vernier furnishes the minutes.

GOUGE. Fr., *Gouge;* Ger., *Hohlmeissel;* Ital., *Sgorbia;* Span., *Gúbia.*
See Augers. Hand-Tools.

GOVERNOR, Steam-Engine. Fr., *Régulateur;* Ger., *Regulator;* Ital., *Regolatore;* Span., *Regulador.*

How the action of centrifugal force is utilized in the construction of steam-engine governors is fully investigated in our article, Angular Motion, p. 101.

Roby and Richardson's Governor, Figs. 3307, 3308.—This invention consists in mounting the governor on the crank-shaft, with which it revolves, and causing it to act directly upon the slide-valve eccentric, so as to regulate the quantity of steam that shall be admitted during the stroke according to the work done by the engine; and as no throttle-valve is needed, steam can at all times be taken into the cylinder at nearly boiler-pressure, and thus do the same work; a much earlier cut-off is attainable and many advantages gained.

3307.

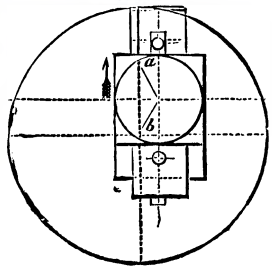

The eccentric A, Fig. 3307, has a rectangular slot cut in it parallel to a line connecting its two centres of forward and backward motions. The slot *a b* fits over a square part of the crank-shaft, upon which it slides at right angles to the crank by which it is driven. It is held in position on this square by two wedges D E, shown in Fig. 3308. Fig. 3308 also shows the position of the governor on crank-shaft; the boss F is fast on the shaft, while G is free to slide towards F. When the balls expand to this slide G the wedges D E are fixed. When the

3308.

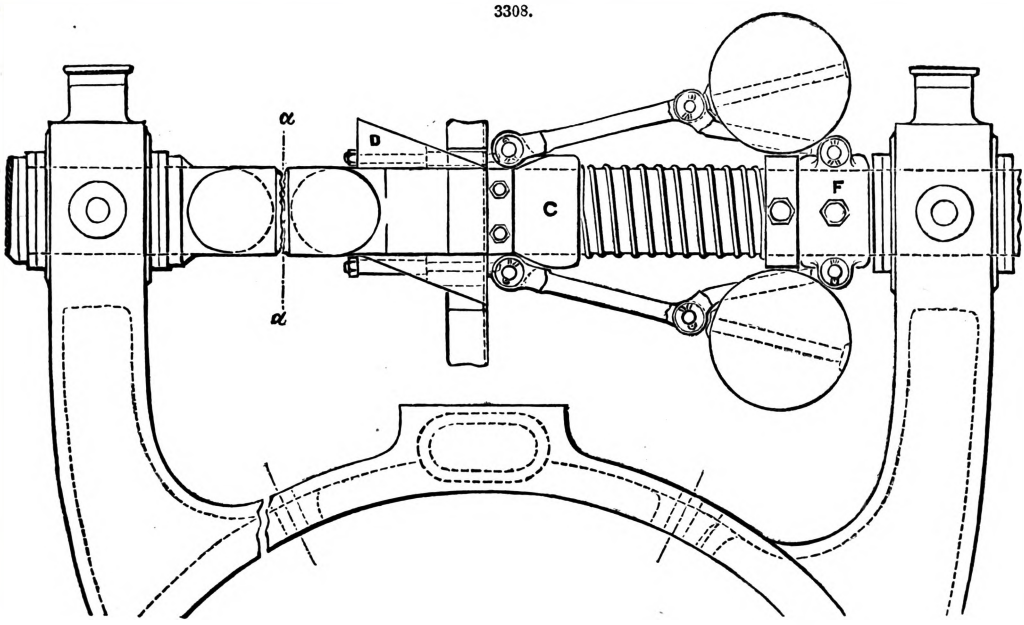

balls expand by their centrifugal force the wedges are drawn out, and the eccentric slides upward in the direction of the arrow, Fig. 3307. The travel of the valve is reduced, the angle of the eccentric with the crank is altered so as to make the cut-off earlier while the lead remains constant.

Clayton and Shuttleworth's Governor, Fig. 3309. This is a simple form of centrifugal governor employed both to portable and stationary engines, but especially to the former class of engine. Motion is imparted to the vertical spindle, through the mitre-wheels and pulley by a plain leather belt, from the crank-shaft of the engine. As the speed increases the centrifugal force causes the balls to expand, and through a proper arrangement of links and sliding sleeve, the balls raise the forked lever, which in turn, by means of the link and quadrant, closes the throttle-valve in the steam-pipe, thus instantly checking the speed of the engine. The speed of the engine being checked, the speed of the governor is also checked, and the throttle-valve opened to a corresponding extent. As in ordinary governors, by a proper adjustment of the quadrant, the throttle-valve is set so that the speed of the engine may be rendered uniform under any variation of work.

N. P. Burgh, in his useful work on Marine Engineering, observes;—"The changes of speed being so sudden, it is obvious that in designing a governor for a marine engine, such an arrangement should be adopted as would have an action extremely sensitive, powerful, and prompt in affecting the valve. Modifications of the old two-ball governors were first tried, and afterwards balanced four-ball governors. The first failed, as the governing action of the balls was destroyed by the motion of the vessel. With the last, in which the balls are arranged to balance each other in such a way that the action of the instrument is not affected by the same cause, it is apparent that when the sudden acceleration of speed in the engine takes place, the inertness of the balls resisting the sudden motion may prevent the prompt action on the valve.

"Attention being drawn to the subject by this conclusion, a governor, consisting of a fly-wheel

loose upon a shaft, was next applied for the purpose. There are several varieties of these governors in use, and the following is an explanation of the governing principle on which the action of most such speed regulators properly depends.

3309.

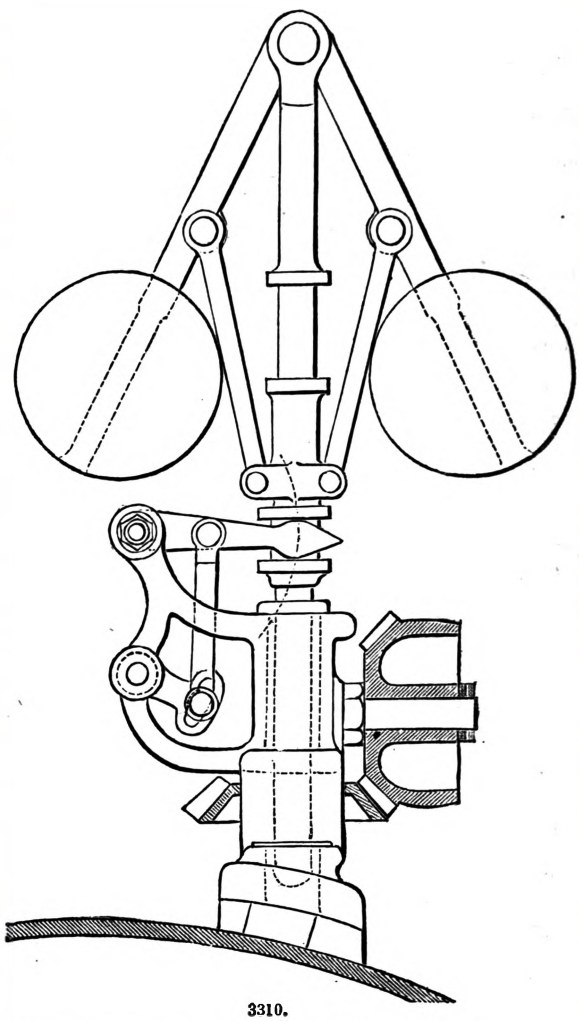

"Presume as an illustration that a fly-wheel is fitted loosely on a shaft driven by a connection with the engine, which shaft rotates with a velocity that varies exactly as the speed of the engine varies. The slight friction resulting from the loose fit of the fly-wheel suffices to impart to it in a short time—almost instantaneously—the same velocity as that of the shaft. Some mechanical contrivance or circuit of connection between the fly-wheel and throttle-valve is so adjusted that, while both shaft and fly-wheel rotate at the same velocity—that is, the normal or proper velocity of the engines—the throttle-valve is held open. But the instant a sudden increase of engine-speed occurs, the relative velocities and position of fly-wheel and shaft are changed, and a differential velocity is created, the revolutions of the shaft becoming a little in excess of those of the fly-wheel, because the slight friction between the shaft and the fly-wheel is not sufficient to impart instantly to the latter the suddenly increased velocity of the former. This advance of the motion of the shaft *shortens* the mechanical circuit of the connection between the fly-wheel and the throttle-valve, and by so operating, closes the valve. Again for exemplification, when from throttling the steam or from other causes a diminution of the engine speed occurs, the revolutions of the shaft are a little below those of the fly-wheel, and the circuit of connection *lengthens* and the valve opens. It is thus evident that the essential means for affecting the valve is, the existence of a differential velocity of the fly-wheel and shaft, and that by this is produced the necessary amount of to-and-fro motion in the mechanical circuit of connection between the fly-wheel and valve. It therefore follows that the more simple the means by which the connection is formed, providing that it be at the same time sufficiently powerful, or capable of easily communicating the result of the differential velocity, the more reliable, sensitive, and efficient will be the regulative action. An example of a wheel-governor by Meriton is represented by Fig. 3310. Both the inertia and the momentum of the fly-wheel are taken into consideration, as the governing forces. The contrivance is that a shaft, made wholly or partially hollow, is cut through at portions of its surface, so as to form two spiral guides or double-acting inclines. Upon this hollow shaft is fitted loosely a heavy fly-wheel having at the boss an elongated cylindrical chamber with guides cut spirally through its surface, so as to form also double-acting inclines.

3310.

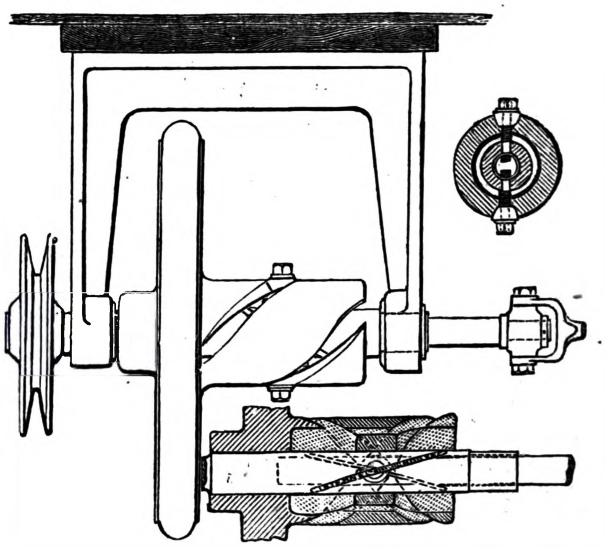

In the interior of the hollow shaft is a short spindle attached to a lever for working the valve. This short spindle has a pin passing through it in such a manner that the ends project and form two studs, which fit into holes cut through or in the inner surface of a ring, which ring has also

forged upon its outer surface two studs. The two pins or studs within the circle of the ring pass through the spiral guides of the hollow shaft to the short spindle connected with the lever working the valve; and the two studs without the circle of the ring pass into the spiral guides in the cylindrical chamber forming part of the fly-wheel.

"The next example worthy of attention embracing many of the features before alluded to is Messrs. Miller and Knill's governor, illustrated by Figs. 3311, 3312. The main parts consist of a fly-wheel with an inclined face on the end of the boss; a separate portion corresponding with the inclined end of the boss is loose or slides on the shaft, and is connected to the lever in communication with the throttle-valve. The action of the component parts is as follows:—On an increased motion being communicated to the shaft by the pulley from the main cranked or engine shaft, the sliding boss closes the throttle-valve; should the speed of the engine decrease, the spring attached to the lever causes the sliding boss to move in a reverse direction, and thus the throttle-valve is opened. It may be added, in passing, that the fly-wheel, although loose on the shaft, is prevented from making more than half a revolution, by centrifugal force, by suitable stops being formed on the back of the boss, and corresponding stops on the boss of the pulley. It is presumed that the extreme simplicity of this arrangement prevents the liability of the details in question becoming disabled.

3311. 3312.

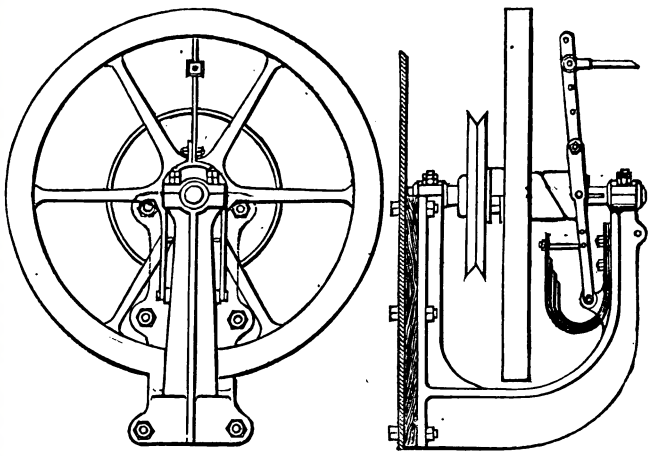

3313.

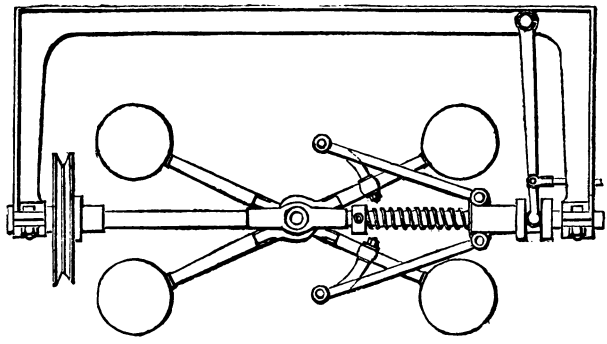

"Silver's name in connection with marine governors is well known, and the ball governor invented by him is illustrated by Fig. 3313. It consists of a spindle supporting two arms, which cross each other, and are loaded at their extremities by balls of metal. The arms are connected by links to the sliding collar, and the motion, forth and back, is communicated to the throttle-valve by the lever and rod. To ensure the return action of the sliding collar a spiral spring is wound round the spindle, and a set collar regulates the power requisite by compressing or expanding the coil.

3314.

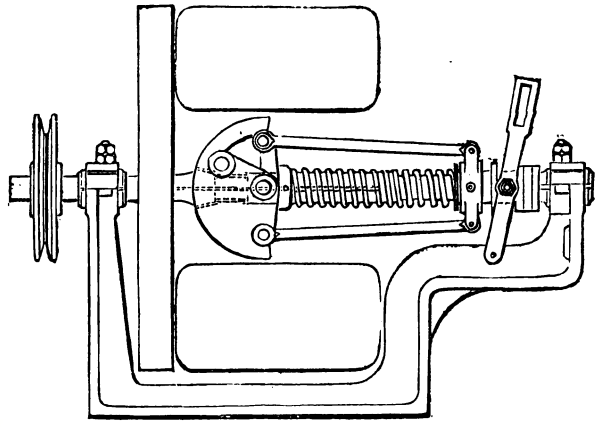

"Silver has also invented another type of governor, termed a momentum-wheel governor, and illustrated by Fig. 3314. This arrangement is a wheel with four vanes fixed on the boss of a pinion, which works loosely on the spindle and gears into two toothed sectors, these sectors being supported on a cross-head made fast to and supported by the spindle in opposite directions on the pinion; and, as they are linked by the rods to the sliding collar, a communication with the throttle-valve by the lever and rod is certain.

"When the spindle of the governor or nautical regulator is turned by the engine to which it is attached, the two toothed sectors, which are carried on the fixed cross-head, being geared into the pinion on the momentum-wheel, have the tendency to turn round on this pinion; but as they are linked to the sliding collar, they necessarily pull inwards this collar, and so compress the spiral spring, and this spring reacting on the collar, and consequently on the toothed sectors, serves to turn round the momentum-wheel, while the vanes on the momentum-wheel balance the action of this spring by the resistance the atmosphere offers to their progress through it. As the leverage

action of the toothed sectors upon the momentum-wheel pinion increases, as the spring becomes distended, and *vice versâ*, it will be seen that the reaction of the spring in propelling the momentum-wheel will at all times be uniform, and as much only is required as will carry round the momentum-wheel with its vanes at its proper speed, and overcome the friction of working the throttle-valve and throttle-valve connections. When the momentum-wheel is in motion, it will rotate with the engine to which it is attached, at a velocity proportioned to that at which it is fixed by the connecting gear; and while the engine from the usual causes may attempt to vary this velocity, it cannot affect the momentum-wheel, but leaves it free to act upon the sliding collar, and consequently upon the throttle-valve—at one time closing the throttle-valve by its action in resisting any increase of velocity, and at another time opening the throttle-valve by its action in resisting any decrease of velocity on the part of the engine. It will now be evident that the power of such a governor or regulator must be very great indeed, having for its agent a momentum-wheel which may be increased to any dimensions; and from the powerful resisting tendency of such wheel, it necessarily follows that its sensitiveness of action must also be very great, and in exact proportion to the tendency of the engine to vary its speed; and the engine itself being the direct prime mover of the throttle-valve, it also follows that the inert power of the momentum-wheel increases its resistance exactly in proportion to the rapidity with which the engine varies its speed."

Farcot's Marine-engine Governor, Figs. 3315 to 3317.—This governor has four balls, $b\,b$, $b^1\,b^1$, these being attached to arms $d\,d^1$, and these arms being, in their turn, connected by the rods $c\,c^1$ with the sliding collar f. The arms carrying the balls turn on the centres $a\,a$ and $a^1\,a^1$ respectively, and the upper pair of balls are made slightly heavier than the others, so that they not only balance the latter, but the weight of the attachments also. The balls are thus placed in equilibrium as far as their weight is concerned, and the centrifugal force generated by their rotation is resisted by the transverse springs e, which are furnished with means of adjustment, by means of which their tension can be varied.

3315. 3316.

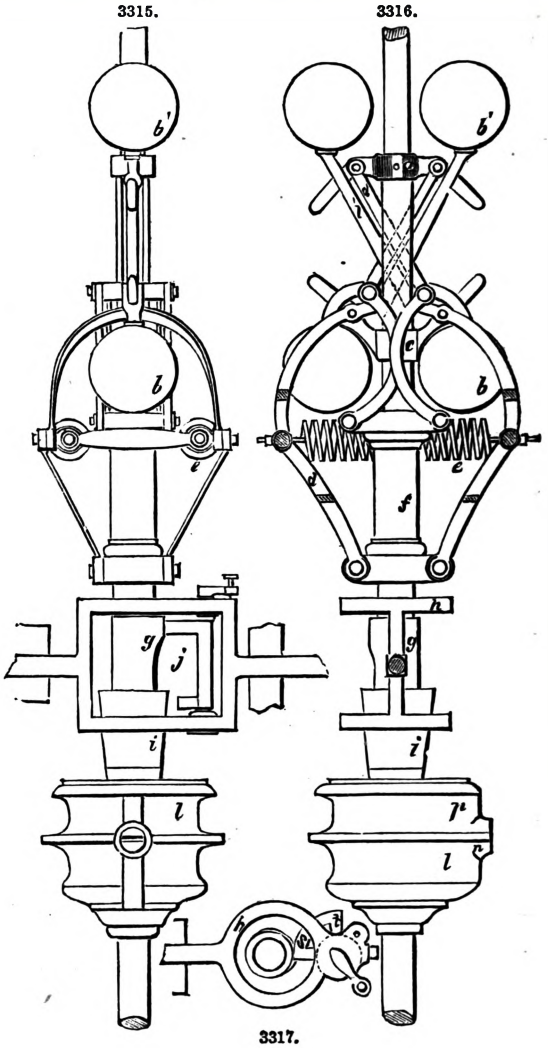

3317.

The sliding collar f has formed in one piece with it the two cams g and i, these, of course, rising and falling on the central spindle according to the variations in the position of the governor-balls. The upper cam g is of the shape shown in the sectional plan, and by it the cut-off of the steam is regulated, the point of the stroke of the piston at which the cut-off occurs depending upon what part of the cam g is brought into contact with the tappet s. The tappet s is formed on the spindle j, which turns in the frame h, and from this frame the motion imparted by the cam g is transmitted to the expansion-valve. The governor-spindle makes two revolutions to each revolution of the crank-shaft, so that the cam g is provided with one projection only.

The lower cam i is merely a conic frustum, and its object is to govern the speed of the engine by means of the throttle-valve when, from the motion of the engine being reversed, or from other causes, the tappet s is thrown out of gear with the upper cam g. The cam i acts upon the tappet t, which, like the tappet s, is formed on the short spindle j, and it will be seen from the engraving that, by turning this spindle, either of the cams g or i can be brought into operation at pleasure, the spindle i being secured in the required position by the set screw q. In the engraving the cam g is shown in gear. When the cam i is in use, the amount of opening given to the throttle-valve of course depends upon the diameter of that portion of the cam which bears against the tappet t, this opening remaining constant throughout the whole revolution of the governor, so long as the balls do not alter their position. The too rapid movement of the governor-balls is prevented by a piston attached to the sliding collar f, and made to work in the air-cylinder l, this cylinder being furnished with a passage at p, leading from one end to the other. The sectional area of this passage, and consequently the facility with which air can be transferred from one side of the piston to the other,

can be varied by means of the screw n, and by this means the speed with which an alteration in the positions of the balls can take place can be regulated.

See ANGULAR MOTION. BRAKE, p. 662. DETAILS OF ENGINES. ENGINES, VARIETIES OF. MARINE ENGINE. PUMPS AND PUMPING ENGINES.

GRAPHIC DIAGRAM. FR., *Diagram graphique;* GER., *Graphisches Diagram;* ITAL., *Diagramma;* SPAN., *Diágrama gráfico.*

The method of scientific analysis or investigation, in which the relations or laws involved in tabular numbers are represented to the eye by means of *diagrams*, is termed the graphic method; and, in such cases, the diagrams employed are called graphic diagrams. It is necessary here to describe the ordinary graphic diagram in which, when employed to show the daily changes of the weather, the abscissas of the curve represent the hours of the day, and the ordinates, the corresponding degrees of temperature.

The graphic diagram, Fig. 3318, employed by P. W. Sheafer to trace the progress of the anthracite coal trade of Pennsylvania deserves attention.

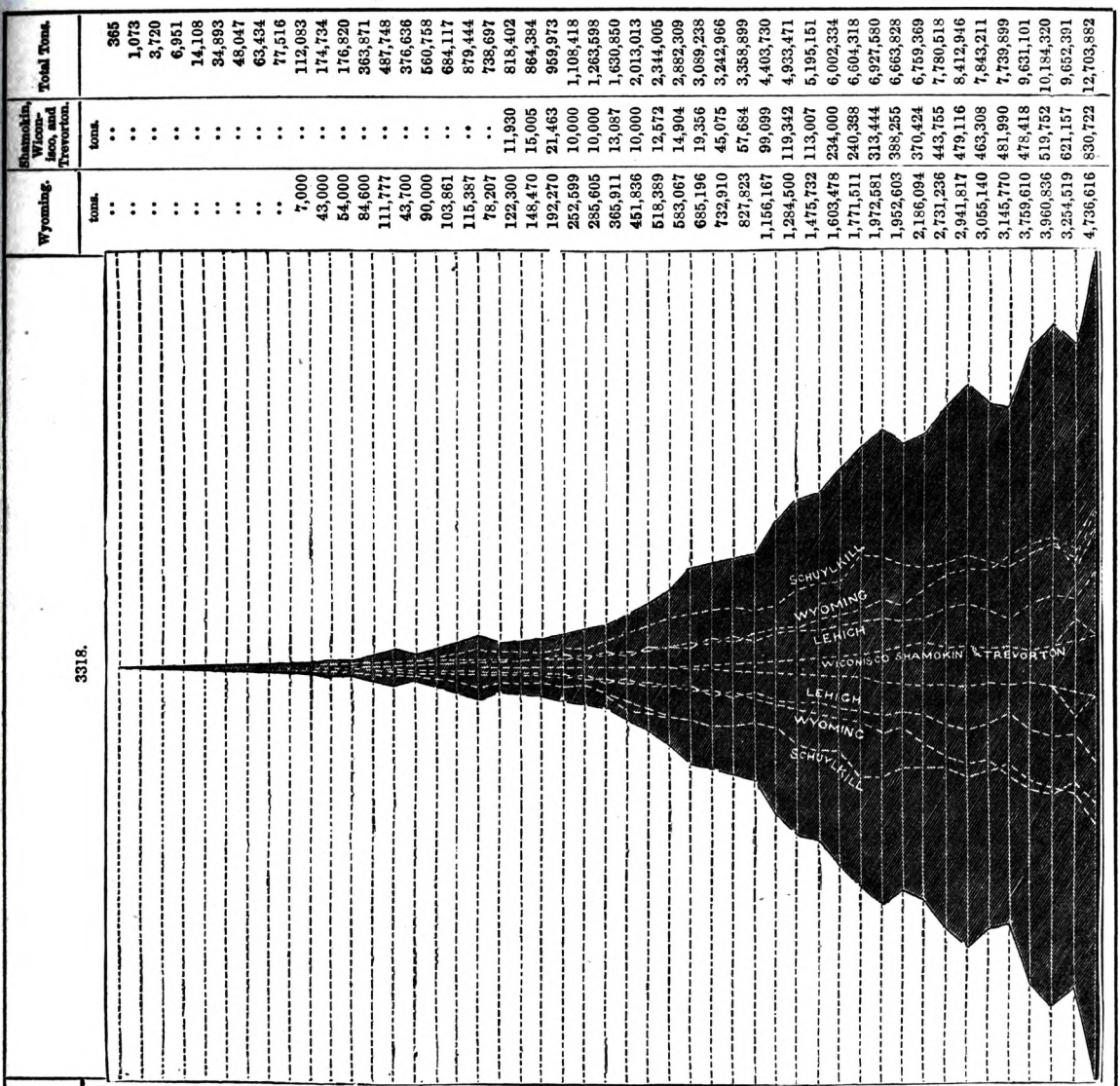

Year.	Lehigh.	Schuylkill.	Wyoming.	Shamokin, Wilkesbarre, and Trevorton.	Total Tons.
	tons.	tons.	tons.	tons.	
1820	365	..	..	..	365
1821	1,073	..	..	..	1,073
1822	2,240	1,480	..	..	3,720
1823	5,823	1,128	..	..	6,951
1824	9,541	1,567	..	..	14,108
1825	28,393	6,500	..	..	34,893
1826	31,280	16,767	..	..	48,047
1827	32,074	31,360	..	..	63,434
1828	30,232	47,284	..	..	77,516
1829	25,110	79,973	7,000	..	112,083
1830	41,750	89,984	43,000	..	174,734
1831	40,966	81,854	54,000	..	176,820
1832	70,000	209,271	84,600	..	363,871
1833	123,000	252,971	111,777	..	487,748
1834	106,244	226,692	43,700	..	376,636
1835	131,250	339,508	90,000	..	560,758
1836	148,211	432,405	103,861	..	684,117
1837	223,902	523,152	115,387	..	879,444
1838	213,615	433,875	78,207	..	738,697
1839	221,025	442,608	122,300	11,930	818,402
1840	225,318	452,291	148,470	15,005	864,384
1841	143,037	585,542	192,270	21,463	959,973
1842	272,546	541,504	252,599	10,000	1,108,418
1843	267,793	677,312	285,605	10,000	1,263,698
1844	371,002	840,378	365,911	13,087	1,630,850
1845	429,463	1,083,796	451,836	10,000	2,013,013
1846	517,116	1,236,582	518,389	12,572	2,344,005
1847	633,507	1,583,374	583,067	14,904	2,882,309
1848	670,321	1,652,835	685,196	19,356	3,089,238
1849	781,656	1,605,126	732,910	45,075	3,242,966
1850	690,456	1,712,007	827,823	57,684	3,358,899
1851	964,224	2,229,426	1,156,167	99,099	4,403,730
1852	1,072,136	2,450,950	1,284,500	119,342	4,933,471
1853	1,054,309	2,470,943	1,475,732	113,007	5,195,151
1854	1,207,186	2,895,208	1,603,478	234,000	6,002,334
1855	1,284,113	3,318,555	1,771,511	240,388	6,604,318
1856	1,351,970	3,258,356	1,972,581	313,444	6,927,580
1857	1,318,541	2,985,541	1,952,603	388,255	6,663,828
1858	1,380,030	2,886,449	2,186,094	370,424	6,759,369
1859	1,628,311	3,004,953	2,731,236	443,755	7,780,518
1860	1,821,674	3,270,516	2,941,817	479,116	8,412,946
1861	1,738,377	2,697,489	3,055,140	463,308	7,843,211
1862	1,351,054	2,890,598	3,145,770	481,990	7,739,899
1863	1,894,713	3,433,265	3,759,610	478,418	9,631,101
1864	2,054,669	3,642,218	3,960,836	519,752	10,184,320
1865	2,040,913	3,735,802	3,254,519	621,157	9,652,391
1866	2,179,364	4,957,180	4,736,616	830,722	12,703,882

GRATE. Fr., *Grille*; Ger., *Rost*; Ital., *Grata*; Span., *Reja*.

See Boiler.

GRAVING DOCK. Fr., *Forme de radoub*; Ger., *Trockendock*; Ital., *Bacino a secco*; Span., *Astillero*.

See Dock.

GRAVITY. Fr., *Gravité*; Ger., *Schwerkraft*; Ital., *Gravità*; Span., *Gravedad*.

Centre of Gravity.—The centre of gravity is the centre of the parallel forces due to weight. The weight of each molecule of a solid body is a vertical force acting in a downward direction. The resultant of these forces is the total weight of the body; and the centre of the parallel forces takes the name of *centre of gravity*. As a matter of fact, the common direction of the forces cannot be made to vary here; but we may, which amounts to the same thing, vary the position of the body with respect to the vertical; and the centre of gravity is the point through which the resultant of the weight of all the molecules constantly passes, whatever the position of the body may be. If the centre of gravity is one of the points in a solid body, we may conceive the weight of all the molecules replaced by a single vertical force equal to their sum and applied to the centre of gravity. But if the centre of gravity is situate outside of the body, we can conceive this substitution only by supposing the point to be invariably fixed to the system of bodies, a supposition which is made use of for the purpose of simplifying demonstrations, data, or formulæ, but to which no idea of reality can be attached. It is for this same purpose of simplifying enunciations and formulæ that we sometimes extend the notion of a centre of gravity to a system which is not solid. There exists in this case no force capable of producing by itself the effect of the weight of the various molecules which make up the system; but it is often convenient to introduce into calculations the resultant which these forces would have if the system were to become instantaneously solid, and consequently to consider the point through which the resultant would constantly pass if the system, without changing its form, changed its position with respect to the vertical, in other words, the centre of gravity of this system. In the remarks which follow we shall assume that the body in question is solid.

Bodies are, in reality, composed of molecules separated from each other; but, in seeking the centre of gravity, we consider them as formed of a continuous matter. The effect of this mode of viewing the subject is merely to misplace, by qualities infinitely small, the points of application of the vertical forces considered, an error which in no way affects the result.

I. If p, p', p'' . . . &c., denote the weight of the elements of the volume of a body, $x, y, z, x', y', z', x'', y'', z''$, &c., their co-ordinates with respect to three rectangular axes, P the total weight of the system, and X, Y, Z, the co-ordinates of the centre of gravity, we have, by taking the moments successively with respect to the three co-ordinate planes,

$$\begin{aligned} \mathrm{P\,X} &= p\,x + p'\,x' + p''\,x'' + \ldots = \Sigma p\,x, \\ \mathrm{P\,Y} &= p\,y + p'\,y' + p''\,y'' + \ldots = \Sigma p\,y, \\ \mathrm{P\,Z} &= p\,z + p'\,z' + p''\,z'' + \ldots = \Sigma p\,z, \end{aligned}$$

whence we deduce

$$\mathrm{X} = \frac{\Sigma p\,x}{\mathrm{P}}, \qquad \mathrm{Y} = \frac{\Sigma p\,y}{\mathrm{P}}, \qquad \mathrm{Z} = \frac{\Sigma p\,z}{\mathrm{P}}, \qquad [1]$$

formulæ which determine the centre of gravity when we know the total weight of the system, and know also how to calculate the sums which appear as the numerators of these fractions.

II. When the body under consideration is *homogeneous*, that is, when its parts, however small we may suppose them, have a weight proportional to their volume, the position of the centre of gravity in the body becomes independent of the nature of this body, and its discovery is merely a matter of geometry. If we call the volumes of the various elements of the body v, v', v'', &c., the total volume V, and the weight of the unit of matter of which its body is composed Π, we shall have $p = \Pi v$, $p' = \Pi v'$, $p'' = \Pi v'' \ldots$, $\mathrm{P} = \Pi\,\mathrm{V}$, and the formulæ [1] will become, by cancelling in the numerators and the denominators the common factor Π,

$$\mathrm{X} = \frac{\Sigma v\,x}{\mathrm{V}}, \qquad \mathrm{Y} = \frac{\Sigma v\,y}{\mathrm{V}}, \qquad \mathrm{Z} = \frac{\Sigma v\,z}{\mathrm{V}}, \qquad [2]$$

formulæ which no longer depend upon the nature of the body, but only upon its geometrical form.

If one of the dimensions of the body were infinitely small with respect to the other two, so that the body was reduced to a surface, the quantities v, v', v'', &c., would denote the elements of this surface, and V its total area. If two dimensions were infinitely small with respect to the third, so that the body was reduced to a line, v, v', v'', &c., would represent the elements of this line, and V its total length.

The formulæ [2] would still hold if v, v', v'', &c., instead of representing the infinitely small elements of the volume, area, or length, expressed by V, represented the finite parts of this volume, area, or length, provided that x, y, z, were then the co-ordinates of the centre of gravity of v; x', y', z', the co-ordinates of the centre of gravity of v', and so on; for the weight of each part may be considered as a vertical force applied to its centre of gravity. Consequently, the moment of the total weight is equal to the sum of the moments of the partial weights; and in the case of homogeneous bodies, *the moment of the total volume is equal to the sum of the moments of the partial volumes*, if by the moment of a volume with respect to a plane, we understand the product of this volume by the distance from its centre of gravity to this plane. Applying this theorem successively to the three co-ordinate planes, and dividing by the total volume V, we fall again upon the equations [2].

III. To simplify the labour of finding the centre of gravity in homogeneous bodies, recourse may be had to the following propositions;—

1. *If the body can be decomposed into a number of parts having their centres of gravity in the same plane, or on the same straight line, the centre of gravity of the whole body will likewise be in this same plane and upon this same straight line.* For we may suppose the weight of each part applied to the centre of gravity of this part; we have then to compose a system of forces parallel and in the same direction, whose points of application are situate, by the hypothesis, in the same plane or on the same straight line. But according to the construction which determines the centre of parallel forces, this point will itself be situate in this plane or on this straight line; and this point is the centre of gravity of the whole body.

2. *If the body has a plane of symmetry, its centre of gravity is in this plane.* It is evident that the centres of gravity of the two parts of the body separated by the plane of symmetry are symmetrically placed with respect to this plane. But these centres of gravity may be considered as the points of application of the weights of the two parts, that is, of two equal forces, parallel and in the same direction. The resultant of these two forces passes therefore through the middle of the straight line which joins their planes of application, and that, whatever the position of the body with respect to the vertical may be; this middle is therefore the centre of gravity of the body. It is evident, besides, that this middle is in the plane of symmetry.

3. *If the body has an axis of symmetry, its centre of gravity is upon this axis.* For an axis of symmetry is always the intersection of at least two planes of symmetry.

4. *If the body has a centre of shape, its centre of gravity is in this point.* For a centre of shape is the intersection of at least two axes of symmetry.

5. *We may substitute for the elements of volume, area, or length, which make up the system under consideration, other elements of volume, area, or length, proportional to them, provided they have their centres of gravity in the same points.* For the centre of the parallel forces is not changed by substituting for the given forces, other forces proportional to them and applied to the same points.

IV. We will now pass on to the consideration of the methods of finding the centre of gravity of the principal figures, and we will begin with lines.

The Straight Line.—The centre of gravity of a straight line is in its middle; for this middle is in the plane of symmetry perpendicular to the straight line.

3319.

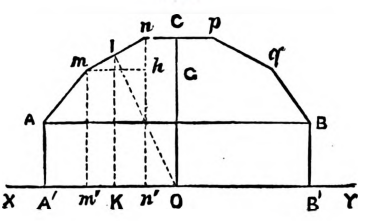

A Regular Broken Line.—Let A $mnpq$ B, Fig. 3319, be a regular broken line, A B its chord, O the centre of the inscribed circle, and O C its axis of symmetry. Here the centre of gravity sought, G, will be upon O C; we have to find the distance G O. Draw through the centre X Y parallel to the chord A B; and project upon this parallel line the summits of the broken line, by means of the perpendiculars A A', mm', nn' . . . B B'. Let I be the middle of any part mn; join I O. Draw I K perpendicular to X Y, and mh parallel to this line. Let x be the distance I K from the centre of gravity I of the part mn, to the straight line X Y, and X the distance O G. If we take the moments with respect to a plane drawn through X Y perpendicularly to the plane of the broken line, we shall have, from the formulæ [2], $X = \frac{\Sigma v x}{V}$ or $X = \frac{\Sigma . mn . IK}{V}$.

The similar triangles I K O and mhn give $mn : IO = mh : IK$, whence $mn . IK = IO . mh$; consequently, $X = \frac{\Sigma . IO . mh}{V}$; or, as I O, the radius of the inscribed circle, is a factor common to all the terms of the numerator, and as $m'n'$ may be substituted for mh, $X = \frac{IO . \Sigma m'n'}{V}$. But $\Sigma m'n'$, or the sum of the projections of the sides or parts of the broken line upon X Y is A' B', which is equal to A B; and V is here the length A $mnpq$ B of the broken line. We may therefore write $OG = \frac{IO . AB}{A\,mnpq\,B}$, that is, *the distance from the centre of gravity of a broken line to its centre is a fourth proportional to the length of this broken line, its chord, and the radius of the inscribed circle.*

Circular Arcs.—The preceding proposition is independent of the number of parts in the broken line; it is therefore true if this number becomes infinitely great, that is, if the broken line becomes an arc of a circle calling the length of the developed arc L, its chord C, and the radius of the inscribed circle, which in this case will be confounded with the arc itself, R, we have $X = \frac{R . C}{L}$. We may therefore affirm that *the centre of gravity of an arc of a circle is upon its axis of symmetry, and its distance from the centre is a fourth proportional to the arc, its chord, and the radius.* For a half circle we should have $X = \frac{R . 2R}{\pi R} = \frac{2}{\pi} R$.

Curves.—If the curve is plane, let $y = f(x)$ be its equation with respect to two rectangular axes traced in its plane, and let ds be an element of the curve, corresponding to the co-ordinates x and y; the equations of the moments will give, calling s the developed length of the curve from the point the abscissa of which is x_0 to the point the abscissa of which is x_1,

$$s . X = \int_{x_0}^{x_1} x\,ds, \text{ and } s\,Y = \int_{x}^{x_1} y\,ds.$$

But we have $ds = dx\sqrt{1+[f'(x)]^2}$; consequently, deducing the values of X and Y, it will become

$$X = \frac{\int_{x_0}^{x_1} x\,dx\sqrt{1+[f'(x)]^2}}{\int_{x_0}^{x_1} dx\sqrt{1+[f'(x)]^2}}, \quad \text{and} \quad Y = \frac{\int_{x_0}^{x_1} f(x)\,dx\sqrt{1+[f'(x)]^2}}{\int_{x_0}^{x_1} dx\sqrt{1+[f'(x)]^2}}.$$

If the curve has a double curvature, let $x = \phi(z)$ and $y = \psi(z)$, be its equations with respect to three rectangular axes; let s be again the developed length of the curve from $z = z_0$ to $z = z_1$. We shall have by the theorem of the moments,

$$sX = \int_{z_0}^{z_1} x\,ds, \qquad sY = \int_{z_0}^{z_1} y\,ds, \qquad sZ = \int_{z_0}^{z_1} z\,ds;$$

but here $ds = dz\sqrt{1+[\phi'(z)]^2+[\psi'(z)]^2}$. Deducing the values of X Y, Z, we have

$$X = \frac{\int_{z_0}^{z_1} \phi(z)\,dz\sqrt{1+[\phi'(z)]^2+[\psi'(z)]^2}}{\int_{z_0}^{z_1} dz\sqrt{1+[\phi'(z)]^2+[\psi'(z)]^2}},$$

$$Y = \frac{\int_{z_0}^{z_1} \psi(z)\,dz\sqrt{1+[\phi'(z)]^2+[\psi'(z)]^2}}{\int_{z_0}^{z_1} dz\sqrt{1+[\phi'(z)]^2+[\psi'(z)]^2}},$$

$$Z = \frac{\int_{z_1}^{z_0} z\,dz\sqrt{1+[\phi'(z)]^2+[\psi'(z)]^2}}{\int_{z_1}^{z_0} dz\sqrt{1+[\phi'(z)]^2+[\psi'(z)]^2}}.$$

V. We will now consider the centre of gravity of plane figures.

Rectangular Figures.—The centre of gravity of a rectangular figure is its centre of shape, that is, the point of intersection of its median or bisecting lines, which are axes of symmetry.

The Parallelogram.—Let A B C D, Fig. 3320, be a parallelogram. Draw the diagonal B D, which will divide it into two equal triangles. Let g and g' be the centres of gravity of these triangles; draw $g\,p$ and $g'\,p'$ perpendicular to B D, and let O be the middle of the diagonal B D. Without knowing the position of the points g and g' with respect to the two triangles to which they belong, we may admit that as these triangles are equal, their centres of gravity would coincide if the triangles were placed one upon the other. We have therefore $g\,p = g'\,p'$ and $O\,p = O\,p'$, consequently the angles $p\,O\,g$ and $p'\,O\,g'$ are equal, and $g\,O = g'\,O$. Therefore $g\,O\,g'$ is a straight line, and the point O is the middle of it. But the weights of the triangles A B D and B D C may be considered as applied to g and g'; the point of application of their resultant, that is, the centre of gravity of the parallelogram, is therefore situate in the middle of the straight line $g\,g'$, that is, in the point O, which is the middle of the diagonal B D. Thus *the centre of gravity of a parallelogram is in the middle of the diagonals*, which is also their point of intersection.

3320.

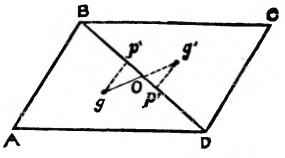

The Triangle.—Let A B C, Fig. 3321, be a triangle. Bisect B C and join A I. Draw $b\,c$ and $d\,e$ parallel to B C; and $b\,b'$, $c\,c'$, $d\,d'$, $e\,e'$ parallel to A I, which passes through the middle of $b\,c$ and $d\,e$, and also of $b'\,c'$ and $d'\,e'$, since $b'\,d = b\,d'$ and $e\,c = e'\,c$. The centre of gravity of the parallelogram $b\,b'\,c'\,c$ is therefore situate upon the straight line A I, in the middle O of the portion of this straight line included between $b\,c$ and $d\,e$. Likewise the centre of gravity of the parallelogram $d'\,d\,e'\,e$ is situate upon A I, in the middle of the portion of this straight line included between $b\,c$ and $d\,e$, that is, in the same point O. But the nearer the straight lines $b\,c$ and $d\,e$ are together, the smaller is the difference of the parallelograms $b\,b'\,c'\,c$ and $d'\,d\,e\,e'$ with respect to each other; and consequently the more they tend to be confounded with each other, and with the trapezium $b\,d\,e\,c$ included between them. Therefore, when the distance between the straight lines $b\,c$ and $d\,e$ is infinitely small, we may consider the trapezium $b\,d\,e\,c$ as confounded with one of these parallelograms, and we have consequently its centre of gravity in the same point O upon A I. It follows from this that if we conceive the triangle decomposed by lines parallel to B C into trapeziums infinitely narrow, all of these trapeziums may be considered as having their

3321.

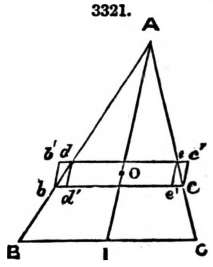

centres of gravity upon A I. Therefore, in virtue of the principle I established above, the centre of gravity of the triangle A B C is situate upon A I.

This being proved, and we might prove the same for any other bisecting line, taking another side as a base, it follows that *the centre of gravity of a triangle is in the point in which the three bisecting lines intersect each other.*

Let A I and B H, Fig. 3322, be two of these bisecting lines, and G their point of intersection. Join I H. The triangles I G H and A G B being similar, we shall have the proportion I G : A G = I H : A B. But the triangles I C H and B C A being also similar, we shall have I H : A B = I C : B C = 1 : 2, therefore, by reason of the common relation, I G : A G = 1 : 2, whence we deduce

3322.

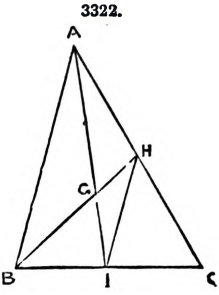

$$IG : IG + AG = 1 : 1 + 2, \text{ or } IG : A = 1 : 3,$$

that is, I G is a third of A I. Therefore *the centre of gravity of a triangle is situate upon the straight line which joins the summit to the middle of the base, and one-third of this line distant from the base.*

The centre of gravity of a triangle possesses a property which is worthy of being known. Suppose applied to the three summits, three equal forces, parallel and in the same direction, the common intensity of which we will represent by P. Required the point in the triangle through which the resultant of the three forces passes. The law for the composition of forces will give us, first, for the two forces P applied in B and C, a force 2 P applied in the middle I of B C; and for this force 2 P applied in I and the force P applied in A, the resultant is found by dividing the distance A I in the inverse proportion of these forces, that is, in the inverse proportion of the numbers 2 and 1, which will give the point G. Consequently the centre of gravity of a triangle may be regarded as the point of application of the resultant of three equal forces, parallel and in the same direction applied to the three summits respectively.

Trapezium.—Let A B D C, Fig. 3323, be a trapezium. Produce the sides that are not parallel till they meet in S; join this point to the middle I of the base A C. The line S I will pass through the middle H of the base B D. It may be shown from the principles employed above that the centre of gravity of the trapezium must be upon the straight line I H. But if we draw the diagonal A D, and determine the centres of gravity g and g' of the two triangles A B D and A D C into which the trapezium has been resolved, the centre of gravity of the trapezium must also be upon the straight line $g g'$, since the weight of the trapezium is the resultant of the weights of the two triangles. The centre of gravity required is therefore in G the point of intersection of the straight lines I H and $g g'$.

3323.

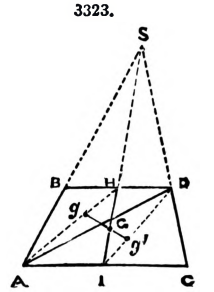

It may be remarked that the line $g g'$ is divided at the point G in the inverse proportion of the weights, or of the surfaces of the two triangles. But these triangles are equal in height; the line $g g'$ is therefore divided in the inverse proportion of the bases A D and B C. It may sometimes be required to know the proportion of the segments G I and G H of the bisecting line I H. To ascertain this, proceed as follows. The proportion required is the same as the proportion of the distances from the point G to the two bases. Let x and y be these distances, and $h = x + y$ the height of the trapezium. Denote A C by B and B D by b. Apply to the weight of the trapezium and to the weights of the two triangles B A D and A C D the theorem of the moments, taking first as the plane of the moments a plane upon the line A C perpendicular to the plane of the trapezium. The distances from the centres of gravity g and g' to the plane of the moments, or, which amounts to the same thing, to A C, will be $\frac{1}{3}h$ for the triangle D A C and $\frac{2}{3}h$ for the triangle B A D. We shall have therefore, substituting for the weights the areas which correspond to them,

$$A B D C \,.\, x = D A C \,.\, \frac{1}{3}h + B A D \,.\, \frac{2}{3}h, \quad \text{or} \quad A B D C \,.\, x = \frac{1}{6}h^2 (B + 2b).$$

Taking the moments with respect to a plane upon B D perpendicular to the plane of the trapezium, and observing that the distance from the points g and g' to B D is $\frac{1}{3}h$ for the first, and $\frac{2}{3}h$ for the second, we shall have likewise,

$$A B D C \,.\, y = D A C \,.\, \frac{2}{3}h + B A D \,.\, \frac{1}{3}h, \quad \text{or} \quad A B D C \,.\, y = \frac{1}{6}h^2 (2B + b).$$

Dividing member by member the two equations thus obtained, we find $\frac{x}{y}$ or $\frac{G I}{G H} = \frac{B + 2b}{2B + b}$.

3324.

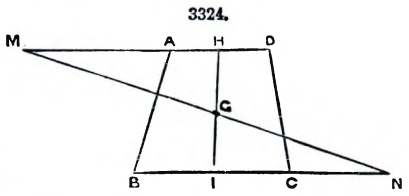

This formula leads us to the following construction;—Produce D A, Fig. 3324, by a quantity A M equal to B C; produce B C in the contrary direction by a quantity C N equal to A D; join M N, which will cut I H in the centre of gravity G. Accordingly we have $\frac{G I}{G H} = \frac{I N}{M H} = \frac{\frac{1}{2}B + b}{B + \frac{1}{2}b} = \frac{B + 2b}{2B + b}$, as the formula requires.

If the bases B and b differed infinitely little from each other, B + 2 b would be sensibly equal

to 2 B + b, and we should have sensibly G I = G H, that is, the point G would be in the middle of the bisecting line I H. This is what happens in the case of the elementary trapeziums considered in the demonstration relative to the centre of gravity of the triangle.

Any Quadrilateral.—Let A B C D, Fig. 3325, be a quadrilateral. Draw the two diagonals, which will intersect each other in the point E. Let I be the middle of the diagonal A C; join D I and B I. Take upon these straight lines the points g and g' at a distance of one-third of their length from the point I; these points will be the centres of gravity of the triangles A D C and A B C. Consequently, if we join them by a straight line $g g'$, the centre of gravity of the quadrilateral will be upon this line, and will divide it in inverse proportion to the surfaces of the triangles. But these triangles, which have the same base A C, are to each other as their heights, or as the lines D E and B E which are proportional to them. We ought therefore to have, if G is the point sought, $Gg : Gg' = BE : DE$.

3325.

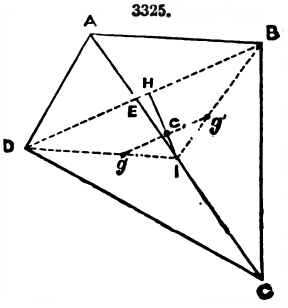

To fulfil this condition, it is sufficient to take B H, equal to D E, and to join the point H to the point I by a straight line cutting $g g'$ in the required point G. For we shall have

$$Gg : Gg' = DH : BH = BE : DE.$$

It may be remarked that we have also I G : I H = I g : I D, and that consequently I G is a third of I H. Hence the following construction;—Draw the two diagonals A C and B D meeting each other in E; take upon one of them the length B H equal to the segment D E; join the point H thus found to the middle I of the other diagonal, and take upon I H a third from the point I. The point G thus found will be the centre of gravity of the quadrilateral.

The Polygon.—To find the centre of gravity of any polygon, divide it into triangles; determine the area and the centre of gravity of each one of them, and apply the construction, which gives *the centre of parallel forces.*

A Regular Polygon.—The centre of gravity of a regular polygon is its centre of shape.

The Circle.—The centre of gravity of a circle is its centre.

The Circular Sector.—Let A O B, Fig. 3326, be a circular sector. Conceive the arc A B which forms the base divided into a large number of equal parts, and radii drawn to all the points of division. The surface of the sector is then divided into a large number of equal elementary sectors, as M O N; and as the arcs, such as M N, are supposed to be very small, these sectors may be considered as rectilinear triangles. From the point O as a centre with a radius equal to $\frac{2}{3}$ of the radius O A, describe the arc $a b$; this arc will be divided by the radii, such as O M and O N, drawn to the points of division of the arc A B, into the same number of equal parts, as $m n$; which may be considered as straight lines parallel to the corresponding elements of the arc A B. The centre of gravity of the triangle M O N is in the middle i of the straight line $m n$ drawn parallel to the base at $\frac{2}{3}$ of the distance between the summit and this base; for this point i is on the bisecting line that would be drawn from the point O, and at a distance from the summit of $\frac{2}{3}$ of this line. But the point i is also the middle of $m n$; and the same may be said of the other elementary triangles. In virtue of the principle V established above, we may therefore substitute for the superficial elements, as M O N, the linear elements as $m n$, since they are proportional to them, and have their centres of gravity in the same points. It follows from this that *the centre of gravity of the circular sector is the same as that of the arc a b described from the centre* O *with* $\frac{2}{3}$ *of the radius.* This centre of gravity is therefore upon the line which bisects the angle A O B, at a distance ρ from the centre indicated by the expression $\rho = \frac{O a \,.\, a b}{a m b}$ But $O a = \frac{2}{3} O A$, $a b = \frac{2}{3} A B$, $a m b = \frac{2}{3} A M B$; we may therefore write $\rho = \frac{2}{3} \cdot \frac{O A \,.\, A B}{A M B}$, that is, *to find the centre of gravity of a circular sector, find the centre of gravity of the arc forming the base, join this point to the centre, and take two-thirds of the joining line, reckoning from the centre.*

3326.

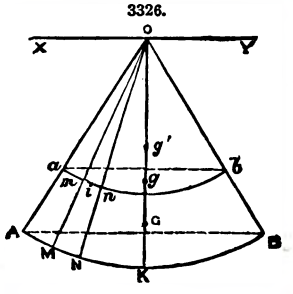

For a semicircle with a radius R, we should have $\rho = \frac{2}{3} \cdot \frac{R \,.\, 2R}{\pi R}$ or $\rho = \frac{4}{3\pi} \,.\, R$.

Circular Trapezium.—Let A B b a, Fig. 3326, be a circular trapezium. Denote the radii O A and O a by R and r, and the angle A O B by α. The centre of gravity sought G will be upon the bisecting line O K: for the centre of gravity g of the sector a O b and the centre of gravity g' of the sector A O B are upon this line, and the weight of the sector A O B is the resultant of the weight of the sector a O b and that of the trapezium A B b a. Through the point O draw a plane perpendicular to O K; and let X V represent this plane upon the plane of the trapezium; taking the moments with respect to this plane, we have A O B . O g = a O b . O g' + A B b a . O G, whence

$$OG = \frac{AOB \,.\, Og - a Ob \,.\, Og'}{AOB - a Ob}.$$

But, $AOB = \frac{1}{2} R^2 \alpha$, $a Ob = \frac{1}{2} r^2 \alpha$, $Og = \frac{2}{3} \cdot \frac{R \,.\, 2R \sin. \frac{1}{2}\alpha}{R\alpha}$ and $Og' = \frac{2}{3} \cdot \frac{r \,.\, 2r \sin. \frac{1}{2}\alpha}{r\alpha}$;

substituting and reducing, we get

$$OG = \frac{2}{3} \cdot \frac{R^3 - r^3}{R^2 - r^2} \cdot \frac{\sin. \frac{1}{2}\alpha}{\frac{1}{2}\alpha} \text{ or } OG = \frac{2}{3} \cdot \frac{R^2 + Rr + r^2}{R + r} \cdot \frac{\sin. \frac{1}{2}\alpha}{\frac{1}{2}\alpha}.$$

Denoting half the sum of the radii R and r by ρ and half their difference by e, which gives $R = \rho + e$ and $r = \rho - e$, we may put the above expression under the form

$$OG = \left(\rho + \frac{e^2}{3\rho}\right) \cdot \frac{\sin. \frac{1}{2}\alpha}{\frac{1}{2}\alpha}$$

which is often convenient for use, especially in finding the centre of gravity of the voussoirs of a semicircular or segmental vault.

A Figure bounded by a Curve.—We will consider, in the first place, a trapezium A B D C, Fig. 3327, bounded by any curve A B, the equation of which is given by the axis of the x's and by two ordinates, A C and B D, corresponding to the abscissæ a and b. This trapezium may be considered as composed of an infinity of rectangles, as M P P′ I, having as their height the ordinate M P or y, and as a base the infinitely small increase P P′ from the abscissa, or dx. The distance of the centre of gravity of this rectangle from the axis of the y's is equal to $x + \frac{1}{2}dx$, and its distance from the axis of the x's is $\frac{1}{2}y$; we shall have therefore, calling the area of trapezium A B D C A, and neglecting $\frac{1}{2}dx$ before x, $A \cdot X = \int_a^b xy\,dx$, and $A \cdot Y = \int_a^b \frac{1}{2}y^2 \cdot dx$, besides $A = \int_a^b y\,dx$. Putting for y its value in x and integrating, we have the co-ordinates X and Y of the centre of gravity sought.

3327.

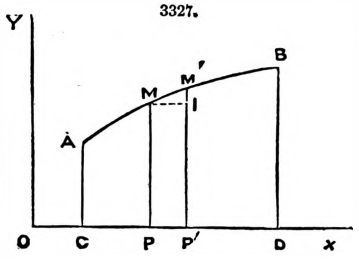

3328.

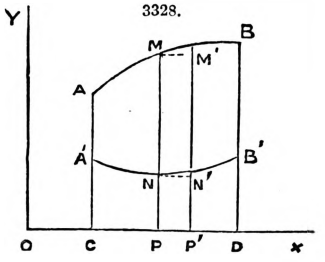

Suppose, in the second place, we have to consider the area included between two curves A B and A′ B′, Fig. 3328, the equations of which are given, and the ordinates corresponding to the abscissæ O B = a, and O D = b. We shall consider the proposed area as made up of an infinite number of rectangles, as M N N′ M′, having as a base the infinitely small increase P P′, or dx, from the abscissa, and for height the difference M N between the ordinates M P = y and N P = y' of the two curves corresponding to the same abscissa x. The distance of the centre of gravity of this rectangle from the axis of the y's will be again $x + \frac{1}{2}dx$, or simply x; and its distance from the axis of the x's will be $\frac{1}{2}(M P + N P)$ or $\frac{1}{2}(y + y')$. We shall have therefore, calling the area A B′ B A′ A, $A \cdot X = \int_a^b x(y - y')\,dx$, and $A \cdot Y = \int_a^b \frac{1}{2}(y + y') \cdot (y - y')\,dx$; besides

$$A = \int_a^b (y - y')\,dx.$$

Putting for y and y' their values in x and integrating, we obtain the co-ordinates X and Y. This calculation is evidently applicable to the case in which the curve A′ B′ is a second branch of the curve A B, and consequently to the determination of the centre of gravity of the area included under a closed curve the equation of which is given.

3329.

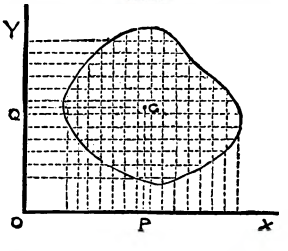

If we have to consider an area enclosed by an irregular curve, or one whose equation we do not possess, we may make use of the following method;—Draw lines parallel to the axes, Fig. 3329, at equal distances apart, these distances being small enough to allow us to consider the portions of the contour included between two consecutive parallels as sensibly rectilinear. The whole figure is thus divided into squares, rectangular trapeziums and rectangular triangles, figures whose areas and centres of gravity we are able to determine. Taking the moments of these partial areas with respect to the two axes and summing, we get the moments of the total area; and as this total area is the sum of the partial areas, by dividing the moments found by this total area, we obtain the co-ordinates of the centre of gravity with an approximation that increases as the space between the parallels decreases.

VI. We have now to determine the centre of gravity of curved surfaces.

Surfaces of Revolution.—Let O X, Fig. 3327, be the axis of revolution, and A B the generating line, or generatrix, whose equation is supposed to be given; and let O C = a and O D = b be the abscissæ of the planes perpendicular to the axis O X serving as limits to the surface. Divide this surface by planes M P, M P′, perpendicular to the axis of revolution, into infinitely small zones, which may be considered as surfaces of frusta of cones. Let x and y be the co-ordinates of the point M, and s the arc A M of the generatrix. We shall have as the expression of the surface of the frustum generated by the element M M′ or ds, $\frac{1}{2}\Big(2\pi y + 2\pi(y+dy)\Big)ds$ or $2\pi y\,ds$, by neglecting the infinitely small dy before the finite quantity y.

The centre of gravity of this elementary zone is situate upon the axis of revolution between the points P and P′, and consequently its distance from the point O is expressed by $x + \epsilon\,dx$, ϵ denoting a fraction. The centre of gravity of the whole surface is likewise situate upon the axis, and, calling its distance from the point O, X, and the area of the surface S, we have, by the theorem of the moments, $S.X = \int_a^b 2\pi y.ds\,(x + \epsilon\,dx) = 2\pi\int_a^b x\,y\,ds$, by neglecting $\epsilon\,dx$ before x. We have besides, $S = 2\pi\int_a^b y\,ds$. Therefore, putting for ds its value $dx\sqrt{1+y'^2}$, replacing the ordinate y and its derivative y' by their values in x and integrating, we obtain the distance X.

We should thus find that *the centre of gravity of the surface of a* CONE OF REVOLUTION *is situate upon its axis, at a distance of one-third of its length from the base.* We should see in like manner that the centre of gravity of the surface of a frustum of a cone is situate upon its axis of revolution, and that it divides it into two portions x and y, the expression of whose ratio is $\frac{x}{y} = \frac{2R+r}{R+2r}$, where R denotes the radius of the larger base and r the radius of the smaller.

Spherical Zone.—In the case of a spherical zone we have $y = \sqrt{R^2 - x^2}$, whence $y' = \frac{x}{\sqrt{R^2-x^2}}$, and $\sqrt{1+y^2} = \frac{R}{\sqrt{R^2-x^2}}$. It follows from this that $y\,ds = R\,dx$, and

$$S = 2\pi\int_a^b R\,dx = 2\pi R\,(b-a).$$

We have further, $SX = 2\pi\int_a^b R\,x\,dy = 2\pi R\,\frac{(b^2-a^2)}{2}$; consequently $X = \frac{1}{2}(b+a)$.

This value is the abscissa of the middle of the axis; consequently *the centre of gravity of a zone is the middle of its axis.*

Any Surface whatever.—Let $z = \phi(x,y)$ the equation of the surface, and S the area included between the limits assigned, a and a' for x, b and b' for y. The expression of the element of surface is $dS = dx\,dy\sqrt{1+[\phi'_x(x,y)]^2+[\phi'_y(x,y)]^2}$, and the whole surface is expressed by

$$S = \int_a^{a'}\int_b^{b'} dx\,dy\sqrt{1+[\phi'_x(x,y)]^2+[\phi'_y(x,y)]^2}.$$

We have further, by the theorem of the moments,

$$SX = \iint x\,dS, \qquad SY = \iint y\,dS, \qquad SZ = \iint z\,dS.$$

Substituting for dS and z their values in x and y, and integrating between the limits indicated, we obtain the values of the co-ordinates X, Y, Z, of the centre of gravity required.

3330.

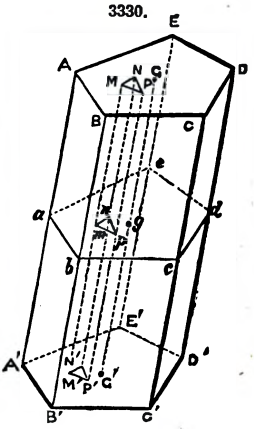

VII. It remains for us now to consider the centre of gravity of volumes.

The Prism.—Let A B C D E A′ B′ C′ D′ E′, Fig. 3330, be any prism. We may conceive this prism divided, by planes parallel to the bases, into equal and infinitely thin sections. These sections will have their centres of gravity similarly placed, since they are equal to each other. All their centres of gravity will therefore be upon the same straight line G G′ parallel to the lateral edges; consequently the centre of gravity of the whole prism will be upon this line. Again, it will be in the middle g of this line; for the weight of these sections will be equal and parallel forces applied in equidistant points of G G′, and consequently, as we may consider the line G G′ loaded with weights uniformly distributed throughout its length, the point of application of their resultant is in the middle of this length. The centre of gravity g of the prism is therefore situate in the section $a\,b\,c\,d\,e$ parallel to the bases and equally distant from them. It is also the centre of gravity of this section. Suppose the whole prism decomposed into infinitely small triangular prisms, as M N P M′ N′ P′, having their edges parallel to those of the given prism; and let $m\,n\,p$ be the section of one of these elementary prisms by the plane $a\,b\,c\,d\,e$. Conceive a plane P perpendicular to the bases of the prism, and take the moments of the elementary

prisms and of the whole prism with respect to this plane. Denote the height of the prism by h, the area mnp by ω, the distance of the centre of gravity of the elementary prism from the plane P by x, the distance of the centre of gravity of the triangle mnp from the same plane by x'; the distance of the centre of gravity of the whole prism by X, and that of the centre of gravity of the polygon $abcde$ by X'. It may be remarked that x and x' can differ only by an infinitely small quantity ϵ, since the centres of gravity of the elementary prism and of the mean section are both situate in the infinitely small triangle mnp, say $x' = x + \epsilon$. Representing the area of the polygon $abcde$ by Ω, we have $h\Omega . X = \Sigma h\omega . x$, whence $\Omega X = \Sigma \omega x$, and $\Omega X' = \Sigma \omega (x + \epsilon)$, or, neglecting the infinitely small ϵ before the finite quantity x, $\Omega X' = \Sigma \omega x = \Omega X$; whence $X' = X$.

Thus the centre of gravity of the given prism and that of the section $abcde$ are at the same distance from the plane P; and as this plane is any plane perpendicular to the bases, it follows that the two centres of gravity coincide. Consequently *the centre of gravity of a prism is that of the section parallel to the bases and equally distant from those bases.*

The same demonstration applies to right and oblique cylinders.

The Tetrahedron.—A demonstration analogous to the above may be applied to the tetrahedron, and generally to the pyramid and the cone. But on account of the importance which the research for the centre of gravity of the tetrahedron possesses, it will be well to apply to it a special geometrical method. Let A B C D, Fig. 3331, be the given tetrahedron. Join the point A to the centre of gravity I of the opposite face. Draw the planes bcd, efh, parallel to B C D; and the straight lines bb', cc', dd', ee', ff', hh', parallel to A I, and terminating in these planes; join $b'c'$, $c'd'$, $b'd'$, and $e'f'$, $f'h'$, $e'h'$.

3331.

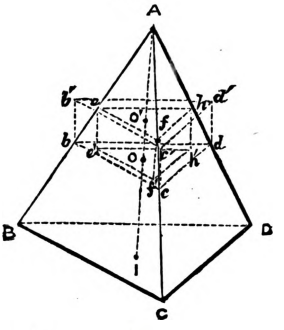

The straight line A I being drawn to the centre of gravity of the base B C D, passes through the centres of gravity o and o' of the sections bcd and efh; for the point A is their common centre of similitude. The triangular prisms bcd, $b'c'd'$, efh, $e'f'h'$, the lateral edges of which are parallel to A I, have therefore both of them their centre of gravity in the middle of oo'. But the nearer the sections bcd, efh, are together, the more will the truncated pyramid $bcdefh$, included between the two prisms, tend to confound itself with each of them. Therefore, when the distance oo' is infinitely small, we may consider the truncated pyramid as confounded with one or the other of these prisms, and that consequently it has its centre of gravity in the same point upon the line A I. It follows from this that if we conceive the tetrahedron decomposed, by planes parallel to B C D, into infinitely thin truncated pyramids, all these truncated pyramids may be considered as having their centres of gravity upon the line A I. Therefore, in virtue of principle I, the centre of gravity of the tetrahedron A B C D is situate upon the same line A I. As the same result would be arrived at if we took another face as a base, it follows that *the centre of gravity of a tetrahedron is in the point of intersection of the straight lines drawn from each summit to the centre of gravity of the opposite face.*

This being established, let O, Fig. 3332, be the middle of the edge B C; draw A O and D O, take O H equal to a third of A O, and O I equal to a third of O D. The points H and I will be respectively the centres of gravity of the forces A B C and B C D. Draw A I and D H. These straight lines which are both in the plane A O D, will meet in a point G, which will be the centre of gravity of the tetrahedron. But, if we draw I H, the similar triangles I G H and A G D will give the proportion I G : G A = I H : A D; but the similar triangles I O H and A O D also give I H : A D = O I : O D = 1 : 3; therefore, on account of the common proportion, I G : G A = 1 : 3, whence I G : I G + G A = 1 : 1 + 3, or I G : I A = 1 : 4, that is, I G is a fourth of A I. Thus *the centre of gravity of a tetrahedron is situate upon the straight line which joins the summit to the centre of gravity of the base, at a distance of one-fourth of this line from the base.*

3332.

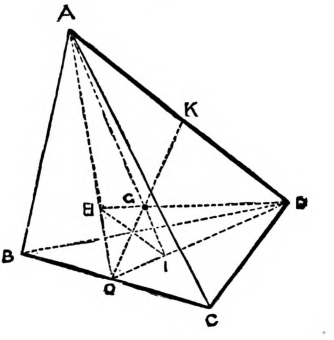

It may be remarked that if through the point G we draw a plane parallel to the base B C D of the tetrahedron, this point will be the centre of gravity of the section determined by this plane; so that *the centre of gravity of a tetrahedron is that of the section parallel to its base, at a quarter of the distance between this base and the opposite summit.*

Suppose the points A, B, C, D, to be the points of application of four equal and parallel forces the common intensity of which we will represent by P. To compose these four forces, we may first compose the two forces P applied to the points B and C, which will give a force 2 P applied to the middle O of B C. We shall have, further, to compose this force 2 P applied in O with the force P applied in D; to do this we must divide the distance O D in the inverse ratio of these forces, that is, in the inverse ratio of the numbers 2 and 1, which will give the point I, the centre of gravity of the base B C D. Lastly, we shall have to compose the force 3 P applied in I with the force P applied in A; to do this we must divide A I in the inverse ratio of the numbers 3 and 1, which will give exactly the point G.

Consequently *the centre of gravity of a tetrahedron is the point of application of the resultant of four equal forces, parallel and in the same direction applied to the four summits respectively.*

The four forces P may be composed in another way. We may first compose the forces P applied in B and C into a single force 2 P applied in the middle O of B C. We may then compose the two

other forces P applied in A and D into a single force 2 P applied in the middle K of A D. It will remain to compose the force 2 P applied in O with the force 2 P applied in K, which will give a force 4 P applied in the middle G of the straight line O K. The point G found in this way must evidently be the same as that which has been found by another method of composition. Therefore *the centre of gravity of a tetrahedron is in the middle of the straight line which joins the middles of two opposite edges.* As there are three analogous right lines joining the middles of two opposite edges, it follows from what we have just said that these three right lines cut each other in the middle; which is indeed a known theorem in geometry.

Truncated Tetrahedron.—Let A B C D E F, Fig. 3333, be the given frustum. It may be demonstrated, as in the case of the tetrahedron, that the centre of gravity must be upon the straight line I H which joins the centres of gravity of the two bases. Let G be this point; it remains for us to determine the ratio of the lengths G I and G H, or, which amounts to the same thing, the ratio of the distances from the point G to the planes of the two bases. Let x and y be these distances; then $x + y = h$ the height of the frustum. Denote the base A B C by B, and the base D E F by b. Decompose the frustum into three pyramids by the planes A E C and A E F, as would be done in finding its volume; and take successively the moments with respect to the two bases, noting that the distances from the centres of gravity of these partial pyramids to the bases D E F and A B C are respectively $\frac{1}{4}h$ and $\frac{3}{4}h$ for the pyramid A D E F, $\frac{3}{4}h$ and $\frac{1}{4}h$ for the pyramid E A B C, and $\frac{1}{2}h$ and $\frac{1}{2}h$ for the pyramid E A F C, as its centre of gravity is in the middle of the straight line which would join the middles of the opposite edges E F and A C. We shall have therefore, by first taking the moments with respect to the base D E F,

3333.

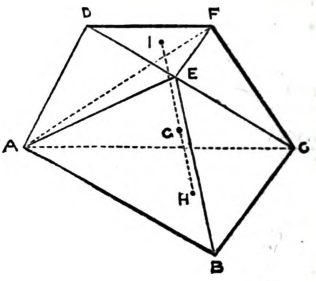

$$\text{A B C D E F} \,.\, x = \text{A D E F} \,.\, \frac{1}{4}h + \text{E A B C} \,.\, \frac{3}{4}h + \text{E F A C} \,.\, \frac{1}{2}h,$$

$$\text{or} \qquad \text{A B C D E F} \,.\, x = \frac{1}{12}h^2 \left(b + 3\,\text{B} + 2\sqrt{\text{B}\,b}\right).$$

Then taking the moments with respect to the base A B C, we shall have in like manner

$$\text{A B C D E F} \,.\, y = \text{A D E F} \,.\, \frac{3}{4}h + \text{E A B C} \,.\, \frac{1}{4}h + \text{E F A C} \,.\, \frac{1}{2}h,$$

$$\text{or} \qquad \text{A B C D E F} \,.\, y = \frac{1}{12}h^2 \left(3\,b + \text{B} + 2\sqrt{\text{B}\,b}\right).$$

Dividing the two equalities member by member, and simplifying, we find

$$\frac{x}{y} = \frac{\text{G I}}{\text{H G}} = \frac{b + 3\,\text{B} + 2\sqrt{\text{B}\,b}}{3\,b + \text{B} + 2\sqrt{\text{B}\,b}}. \qquad \text{[A]}$$

The bases B and b may be replaced by the squares of their homologous edges, since they are proportional to them; calling these edges A and a, we get

$$\frac{x}{y} = \frac{\text{G I}}{\text{H G}} = \frac{a^2 + 3\,\text{A}^2 + 2\,\text{A}\,a}{3\,a^2 + \text{A}^2 + 2\,\text{A}\,a}.$$

It may be remarked that when the two bases are infinitely near, they differ infinitely little from each other, and that G I is then sensibly equal to G H, that is, the centre of gravity is sensibly in the middle of the straight line which joins the centres of gravity of the two bases. This was what occurred in the case of the elementary sections under consideration when we were seeking the centre of gravity of the tetrahedron.

3334.

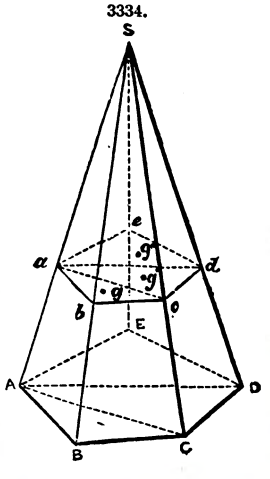

Any Pyramid.—Let S A B C D E, Fig. 3334, be a pyramid with any base. Decompose it into tetrahedrons by the diagonal planes A S C and A S D. At a distance from the base equal to a quarter of the height of the pyramid, draw a plane $a\,b\,c\,d\,e$ parallel to this base. This plane will contain the centres of gravity g, g', g'', of the partial tetrahedrons, and consequently the centre of gravity of the whole pyramid (Principle I). But the tetrahedrons S A B C, S A C D, S A D E, having the same height, are to each other as their bases, or as the triangles $a\,b\,c$, $a\,c\,d$, $a\,d\,e$, proportional to these bases. Therefore, if we suppose applied to the points g, g', g'', weights equal to those of the corresponding tetrahedrons, these weights would be at the same time proportional to the areas of the triangles $a\,b\,c$, $a\,c\,d$, $a\,d\,e$. Hence it follows that the point of application of the resultant of these weights is no other than the centre of gravity of the polygon $a\,b\,c\,d\,e$. But it

may be easily seen by simple similitudes of triangles, that the straight line which joins the summit S to the centre of gravity of the base A B C D E of the pyramid, passes through the centres of gravity of all the sections, as *a b c d e*, parallel to this base. Therefore *the centre of gravity of any pyramid is upon the straight line which joins the summit to the centre of gravity of the base, at a distance of one-fourth of this line from the base.*

This theorem extends to a cone, whether right or oblique, and with any base, since such a body is a pyramid whose base is a polygon with an infinite number of infinitely small sides.

Truncated Pyramid.—If the frustrum of the pyramid be decomposed into frusta of tetrahedrons, their upper bases will be proportional to the lower, and generally to the sections made by the same plane parallel to the bases. Hence it follows that the ratio of the distances from their centres of gravity to the two bases will be the same for each of them, and that consequently their centres of gravity will be in the same plane parallel to the bases, and determined by the formula [A] given above for the frustum of tetrahedron. The centre of gravity of the whole frustum of the pyramid will therefore be also in this plane. Again, the partial truncated tetrahedrons having the same height, and proportional bases, are to each other as these bases, or as the sections made by the plane containing the centres of gravity of the partial tetrahedrons. Therefore *the centre of gravity of a frustum of the pyramid is upon the straight line which joins the centres of gravity of the two bases, and it divides this line in the proportion expressed by the formula* [A] *relative to the tetrahedron*, the letters B and *b* denoting in this case the bases of the frustum of the pyramid.

This proposition extends to the frustum of the cone; and the bases of B and *b* being in this case proportional to the squares of their Radii R and *r*, we have, still denoting by *x* and *y* the segments determined by the centre of gravity sought upon the straight line which joins the centres of gravity of the two bases, $\frac{x}{y} = \frac{r^2 + 3\,R^2 + 2\,R\,r}{3\,r^2 + R^2 + 2\,R\,r}$.

The Sphere.—The centre of gravity of a sphere is its centre of shape.

A Spherical Sector.—We may conceive the sector divided up into elementary pyramids, all of them having their summits in the centre of the sphere. The centre of gravity of each of them will be upon the radius drawn to the centre of gravity of the element of spherical surface which serves as its base at a distance of $\frac{3}{4}$ of this radius from the centre. Suppose an auxiliary spherical surface described, with a radius equal to $\frac{3}{4}$ that of the sphere, and terminated in the cone which limits the sector, which spherical surface will be similar to that which forms the base of the sector. This auxiliary surface will cut all the pyramids, and the section obtained in each of them will have its centre of gravity at the same point as the pyramid. Hence it follows (Principle V) that the centre of gravity of the sector is the same as that of the auxiliary surface, and that consequently it is in the middle of the axis of this auxiliary zone. If R is the radius of the sphere and *h* the height of the spherical surface which forms the base of the sector, $\frac{3}{4}$ R and $\frac{3}{4}\,h$ will be the radius and the height of the auxiliary portion. Calling the distance from the centre of gravity of the sector to the centre X, we have therefore $X = \frac{3}{4}\left(R - \frac{1}{2}\,h\right)$. If the sector is half a sphere, we have $h = R$, and consequently $X = \frac{3}{8}\,R$.

A Body terminated by a Surface of Revolution.—Let O X, Fig. 3327, be the axis of revolution, and $y = f(x)$ the equation of the generating line A B. We may regard the whole volume as composed of elementary cylinders, as M P P′ I, having as a radius M P = *y*, and a height P P′ = *dx*. The expression of one of these elementary cylinders is $\pi\,y^2\,dx$. If therefore we put O C = *a*, and O D = *b*, the abscissæ of the planes perpendicular to the axis serving as limits to the body under consideration, we shall have first, $V = \pi\int_a^b y^2\,dx$, V being the volume of the body. The centre of gravity is upon the axis of revolution at a distance X from the origin, which will be given, in virtue of the theorem of the moments, by the relation $V\,X = \pi\int_a^b y^2\,x\,dx$. Replacing *y* by its value and integrating, we obtain the unknown distance X.

A Body terminating in any Surface.—Suppose the body included between the two given surfaces $z_1 = F(x, y)$ and $z_2 = f(x, y)$, the planes $x = a$, $x = a'$, and the planes $y = b$, $y = b'$. The element of the volume is the rectangular parallelopiped $dx\,dy\,dz$; the total volume V is therefore expressed by the relation

$$V = \int_a^{a'}\int_b^{b'}\int_{z_2}^{z_1} dx\,dy\,dz = \int_a^{a'}\int_b^{b'} [F(x,y) - f(x,y)]\,dx\,dy.$$

We have further, taking the moments of these elements with respect to the three co-ordinate planes,

$$V\,X = \int_a^{a'}\int_b^{b'}\int_{z_2}^{z_1} dx\,dy\,dz = \int_a^{a'}\int_b^{b'} [F(x,y) - f(x,y)]\,x\,dx\,.\,dy.$$

$$V\,Y = \int_a^{a'}\int_b^{b'}\int_{z_2}^{z_1} y\,dx\,dy\,dz = \int_a^{a'}\int_b^{b'} [F(x,y) - f(x,y)]\,dx\,.\,y\,dy.$$

$$V\,Z = \int_a^{a'}\int_b^{b'}\int_{z_2}^{z_1} z\,dx\,dy\,dz = \int_a^{a'}\int_b^{b'} \frac{1}{2}\,\{[F(x,y)]^2 - [f(x,y)]^2\}\,dx\,dy.$$

Any Volume.—In certain cases, in earthwork for example, it may be required to find the centre of gravity of a wholly irregular figure. We will suppose the case of a mound given by the projections of the curves of its level. The first step is to compute the area included under each of these curves. Let h be the distance of the consecutive planes of these curves. If this distance is not too great, and the curves do not vary too abruptly, we may consider each section included between two consecutive planes as a truncated pyramid, the volume of which may be determined by the known rule. Find the centres of gravity of the two bases; the centre of gravity of the section will be upon the straight line which joins these two centres, and it will divide this line in the proportion expressed by the formula [A]. Knowing thus the volume and the centre of gravity of each section, take the moments with respect to a horizontal plane and with respect to two rectangular vertical planes, and the rectangular co-ordinates of the centre of gravity of the mound will be obtained.

VIII. The centre of gravity possesses various properties, the most important of which is expressed by *Guldin's Theorem.*

1. *The volume of a truncated cylinder is equal to the product of its right section by the distance between the centres of gravity of its two bases.* Suppose, in the first place, the lower base to be the right section itself; take it as the plane of the xy's, and let θ be the angle which the upper base makes with this plane. If Ω denote the total area of the upper base, and ω an element of this area, $\Omega \cos.\theta$ and $\omega \cos.\theta$ will denote the total area of the lower base and the element of this base corresponding to the element ω. Call the ordinate of the element ω, z. The volume of the cylinder which projects ω upon the plane of the base will be expressed by $\omega \cos.\theta . z$ within an infinitesimal of a superior order, and the volume of the truncated cylinder will consequently be expressed by $V = \Sigma\, \omega \cos.\theta . z = \cos.\theta . \Sigma\, \omega z$. But if Z is the ordinate of the centre of gravity of the upper base, we have, by the theorem of the moments, $\Omega Z = \Sigma\, \omega z$; therefore $V = \cos.\theta . \Omega Z$, that is, the volume sought is the product of the lower base $\Omega \cos.\theta$ by the ordinate Z of the centre of gravity of the upper base. But the foot of this ordinate is precisely the centre of gravity of the lower base, for if X denote the distance from the centre of gravity of the upper base to the plane of the yz's and X′ the distance from the centre of gravity of the lower base to this same plane, we shall have, to determine these two distances by, the equations $\Omega X = \Sigma\, \omega x$ and $\Omega \cos.\theta . X' = \Sigma . \omega \cos.\theta . x$; the second may be reduced to $\Omega X' = \Sigma\, \omega x = \Omega X$, whence $X = X'$.

It may be seen in the same way that these two centres of gravity are at the same distance from the plane of the xz's; therefore they are upon the same line parallel to the axis of the z's, and the second is the foot of the ordinate of the first. The theorem is thus demonstrated for the case under consideration.

If the planes of the two bases are of any kind, we may divide the truncated cylinder, by a plane perpendicular to its edges, into two truncated cylinders which will come under the first case; and, by summing, we shall see that the measure of the volume is the right section multiplied by the sum of the ordinates of the centres of gravity of the two bases with respect to this right section, the foot of both of which ordinates is the centre of gravity of this section; this expression amounts therefore to the product of the right section by the distance between the centres of gravity of the two bases.

2. We will now consider any number of bodies the weights of which are p, p', p'', &c. We shall determine the centre of gravity of this system as if it were solid. Let ρ, ρ', ρ'', &c., be the distances from the respective centres of gravity of these bodies to the origin, R the distance from the centre of gravity of the system to this same origin; $\alpha, \beta, \gamma, \alpha', \beta', \gamma', \alpha'', \beta'', \gamma''$, &c., a, b, c, the angles which the straight lines upon which these distances are measured make with the three axes. Putting P for the total weight, we have, by the theorem of the moments,

$$P R \cos.a = \Sigma\, p\rho \cos.\alpha, \quad P R \cos.b = \Sigma\, p\rho \cos.\beta, \quad P R \cos.c = \Sigma\, p\rho \cos.\gamma. \quad [1]$$

These relations express that *if we apply to the origin, forces proportional to the products* $p\rho, p'\rho', p''\rho''$, *&c., and respectively directed towards the centres of gravity of the partial bodies, they will have as a resultant a force proportional to the product* P R *and directed towards the centre of gravity of the system.* If the origin were the centre of gravity itself, the forces $p\rho, p'\rho', p''\rho''$, &c., would hold each other in equilibrium in this point, since the resultant would be nil.

3. If we square both members of the equations [1] and add them together member by member, we get $P^2 R^2 = \Sigma\, p^2\rho^2 + \Sigma . 2pp'\rho\rho' (\cos.\alpha \cos.\alpha' + \cos.\beta \cos.\beta' + \cos.\gamma \cos.\gamma')$, or, calling the angle of ρ with ρ' $(\rho\rho')$, $P^2 R^2 = \Sigma\, p^2\rho^2 + \Sigma\, 2pp'\rho\rho' . \cos.(\rho\rho')$. If r denote the distance of the centres of gravity of the bodies p and p', we have $r^2 = \rho^2 + \rho'^2 - 2\rho\rho' \cos.(\rho\rho')$, whence $2\rho\rho' \cos.(\rho\rho') = \rho^2 + \rho'^2 - r^2$, consequently $P^2 R^2 = \Sigma\, p^2\rho^2 + \Sigma\, pp' (\rho^2 + \rho'^2 - r^2)$. Collecting all the terms in ρ^2, we have $\rho^2 (p^2 + pp' + pp'' + \ldots)$ or $\rho^2 . P p$; analogous terms would be found by collecting all those containing ρ'^2, then those containing ρ''^2, and so on. We may therefore write

$$P^2 R^2 = P \Sigma\, p\rho^2 - \Sigma\, pp' r^2. \quad [2]$$

We conclude from this relation that *if the system be moved without changing its form, and in such a way that its centre of gravity remains always at the same distance from a fixed point (the origin), the sum of the products of the weights of the different bodies by the square of their distance from this fixed point, will remain constant.* For R being constant, as well as the distances represented by r, the term $P \Sigma\, p\rho^2$ must be constant, and consequently the same is true of $\Sigma\, p\rho^2$

The relation [1] may be written $\Sigma\, p\rho^2 = P R^2 + \dfrac{\Sigma\, pp' r^2}{P}$; under this form, that the system retaining its form, that is, r, r', r'', &c., remaining constant, $\Sigma\, p\rho^2$ will be as small as possible when R is equal to zero; in other words, the centre of gravity possesses this property, namely, that *the*

sum of the products of the weights of the different bodies by the square of the distance from their partial centres of gravity to the centre of gravity of the system, is a minimum.

IX. If all the material points forming a part of the system under consideration are in the same place, where the value of the acceleration g due to the weight may be regarded as constant, we may, in the equations of the moments, substitute the masses for the weights, and write

$$\mathrm{M}\,\mathrm{X} = \Sigma m x, \quad \mathrm{M}\,\mathrm{Y} = \Sigma m y, \quad \mathrm{M}\,\mathrm{Z} = \Sigma m z.$$

If these different points are far enough from each other to make g vary sensibly, these equations cannot be deduced from the equations of the moments. But they define, nevertheless, the co-ordinates X, Y, Z, of a certain point in space, which plays an important part in the mechanics of free bodies, and particularly in astronomy. Euler proposed for this point the name of *centre of inertia;* other writers have proposed to call it the *centre of mass;* the name of *centre of gravity* has however predominated, though gravity is foreign to the determination of this point. Care must be taken, in order to avoid confusion, to distinguish the case in which the weights are proportional to the masses, from that in which this proportion has no existence.

Movement of the Centre of Gravity.—When a material system is in motion, its centre of gravity is generally in motion too; and this motion may be determined when that of each of the material points which make up the system is known. The determination of this is the object of a theorem known as the *Principle of the motion of the centre of gravity*, which we will now establish.

I. Let p, p', p'', &c., be the weights of the material points of which the material point under consideration is composed, x, x', x'', &c., their distances from a plane of comparison, P the total weight of the system, and X the distance of its centre of gravity from the same plane. We shall have by the theorem of the moments of parallel forces,

$$p x + p' x' + p'' x'' + \ldots = \mathrm{P}\,\mathrm{X}. \qquad [1]$$

But if all the points of the system are in a space so limited that the acceleration g due to the weight is the same for all these points, we may, dividing all the terms of the relation [1] by g, substitute the masses for the weights, and write

$$m x + m' x' + m'' x'' + \ldots = \mathrm{M}\,\mathrm{X}. \qquad [2]$$

In this relation, the quantities x, x', x'', &c., X vary with the time, and may be considered as functions of this variable. Differentiating with respect to the time, we have

$$m \frac{dx}{dt} + m' \frac{dx'}{dt} + m'' \frac{dx''}{dt} + \ldots = \mathrm{M} \frac{d\mathrm{X}}{dt}.$$

But $\frac{dx}{dt}$ is the component, perpendicular to the plane of comparison, of the velocity of the point whose mass is m; we will represent it by v_x. Also $\frac{dx'}{dt}$ is the component, in the same direction, of the velocity of the point whose mass is m'; we will represent it by v'_x, and so on with the others. Similarly $\frac{d\mathrm{X}}{dt}$ is the component, perpendicular to the plane of comparison, of the velocity of the centre of gravity; we will represent it by V_x. By means of these notations, the above relation may be written, $m v_x + m' v'_x + m'' v''_x + \ldots = \mathrm{M}\,\mathrm{V}_x$, or, abridging the expression,

$$\Sigma m v_x = \mathrm{M}\,\mathrm{V}_x, \qquad [3]$$

that is, *the sum of the quantities of movement of the whole system, projected upon an axis perpendicular to the plane of comparison, is equal to the quantity of movement of the centre of gravity, projected upon the same axis* (if we attribute to the centre of gravity a mass equal to the total mass of the system). If we consider the system with reference to three rectangular axes, of the x's, of the y's, and of the z's, and project the quantities of movement successively upon these three axes, we shall obtain, for the axes of the y's and the z's, two other equations analogous to the equation [3], namely,

$$\Sigma m v_y = \mathrm{M}\,\mathrm{V}_y, \qquad [4]$$

$$\text{and} \quad \Sigma m v_z = \mathrm{M}\,\mathrm{V}_z. \qquad [5]$$

The equations [3], [4], and [5] will determine the velocity V of the centre of gravity; for we deduce first, $\mathrm{V}_x = \frac{\Sigma m v_x}{\mathrm{M}}$, $\mathrm{V}_y = \frac{\Sigma m v_y}{\mathrm{M}}$, $\mathrm{V}_z = \frac{\Sigma m v_z}{\mathrm{M}}$. We shall have further

$$\mathrm{V} = \sqrt{\mathrm{V}^2_x + \mathrm{V}^2_y + \mathrm{V}^2_z},$$

and if α, β, γ, denote the angles which this velocity makes with the axes,

$$\text{ccs. } \alpha = \frac{\mathrm{V}_x}{\mathrm{V}}, \quad \cos. \beta = \frac{\mathrm{V}_y}{\mathrm{V}}, \quad \cos. \gamma = \frac{\mathrm{V}_z}{\mathrm{V}}.$$

II. The equations [3], [4], and [5] are, besides, susceptible of a remarkable interpretation. The quantity of movement of a material point is a number of kilogrammes; we may therefore always conceive a force which has the same direction as the velocity of the body in motion, and whose intensity is expressed by its quantity of motion. Let ϕ, ϕ', ϕ'', &c., be the forces which would thus represent the quantities of motion of the various material points of the system, Φ the force

which, in like manner, would represent the quantity of motion of the centre of gravity; let ϕ_x, ϕ'_x, ϕ''_x, &c., Φ_x, be the projections of these forces upon the axis of the x's, respectively equivalent to the quantities of motion projected upon the same axis, or to $m v_x$, $m' v'_x$, $m'' v''_x$, &c., $\mathrm{M} \mathrm{V}_x$. In virtue of the equation [3] we shall have $\Sigma \phi_x = \Phi_x$. We should have likewise for the other two axes $\Sigma \phi_y = \Phi_y$ and $\Sigma \phi_z = \Phi_z$. But these last three equations denote that the force Φ is the resultant of the forces ϕ, ϕ', ϕ'', &c. The equations [3], [4], and [5] denote that *the quantity of motion of the centre of gravity is the resultant of the quantities of motion of the various points of the system transferred parallel to each other to this point* (supposing the quantities of motion to be composed like the forces).

III. This relation exists at any instant during the motion, and consequently also at the instant of initial motion. So that if we denote by the index *zero* the initial velocities, we shall have, in virtue of the equations [3], [4], [5] themselves,

$$\Sigma m v_{0x} = \mathrm{M} \mathrm{V}_{0x}, \qquad [6]$$
$$\Sigma m v_{0y} = \mathrm{M} \mathrm{V}_{0y}, \qquad [7]$$
$$\Sigma m v_{0z} = \mathrm{M} \mathrm{V}_{0z}. \qquad [8]$$

Subtracting member by member the equations [6], [7], [8] from the equations [3], [4], [5], we obtain

$$\Sigma m v_x - \Sigma m v_{0x} = \mathrm{M} \mathrm{V}_x - \mathrm{M} \mathrm{V}_{0x}, \qquad [9]$$
$$\Sigma m v_y - \Sigma m v_{0y} = \mathrm{M} \mathrm{V}_y - \mathrm{M} \mathrm{V}_{0y}, \qquad [10]$$
$$\Sigma m v_z - \Sigma m v_{0z} = \mathrm{M} \mathrm{V}_z - \mathrm{M} \mathrm{V}_{0z}. \qquad [11]$$

But in virtue of *the principle of the quantities of motion, or of the effect of impulse*, we have

$$\Sigma m v_x - \Sigma m v_{0x} = \int_0^t \mathrm{R}_x \, dt,$$
$$\Sigma m v_y - \Sigma m v_{0y} = \int_0^t \mathrm{R}_y \, dt,$$
$$\Sigma m v_z - \Sigma m v_{0z} = \int_0^t \mathrm{R}_z \, dt,$$

R denoting the *resultant of translation* of the external forces soliciting the system; we may therefore write

$$\left.\begin{aligned} \mathrm{M} \mathrm{V}_x - \mathrm{M} \mathrm{V}_{0x} &= \int_0^t \mathrm{R}_x \, dt \\ \mathrm{M} \mathrm{V}_y - \mathrm{M} \mathrm{V}_{0y} &= \int_0^t \mathrm{R}_y \, dt \\ \mathrm{M} \mathrm{V}_z - \mathrm{M} \mathrm{V}_{0z} &= \int_0^t \mathrm{R}_z \, dt \end{aligned}\right\} \qquad [12]$$

But these equations are those of the motion of a material point whose mass is M, whose initial velocity is V_0, and which is subjected to a force R. Therefore we may say, *the centre of gravity of a material system moves as if the whole mass of the system were concentrated in it, as if the resultant of translation of all the external forces were applied to it, and as if all the quantities of initial motion had been transferred to it parallel to each other and composed like forces.* Such is the principle of the movement of the centre of gravity.

IV. This principle does not depend upon the *mutual* forces which are exerted between the various material points of which the system is composed. From this observation, several consequences are deduced;—

1. Suppose a spherical bomb thrown into space; its centre will describe a trajectory in the vertical plane passing through the direction of the initial velocity. Suppose also that at a certain instant the bomb bursts; as the explosion is due merely to the interior mutual forces which are developed, these forces will not alter the motion of the centre of gravity; and if it were possible to determine at each instant the centre of gravity of the system formed by the fragments of the bomb, we should see that this point continues to describe the trajectory which the centre of the whole bomb was describing before the explosion occurred.

2. The equations [12] explain also the effects of the *recoil* in fire-arms. Let us take as an example a piece of cannon standing upon a horizontal soil with its carriage. Previous to the explosion the system was subjected merely to its own weight, and to the reactions of the ground, producing a resultant equal and contrary to this weight; and these forces passing through the centre of gravity gave a total resultant equal to zero. The explosion being due solely to mutual molecular forces, the resultant of translation R remains nil; in virtue of the equations [12], which in this case are reduced to one. If we take as the axis the horizontal direction of the shot, the final quantity of motion is equal to the initial quantity of motion; but this was nil; the final quantity of motion is therefore nil also. Denoting the mass of the ball by m, its velocity by v, the mass of the piece and its carriage by M, and the velocity of the recoil by u, we have $m v - \mathrm{M} u = 0$,

whence $u = v \cdot \frac{m}{M}$, that is, the initial velocity of the recoil would be a fraction of the initial velocity of the ball (in the heart of the piece) marked by the ratio between the mass of the ball and that of the piece with its carriage. In reality the velocity of the recoil is a little less, on account of the friction of the carriage upon the ground, that of the wheels upon their bearings, and that of the ball against the inner surface of the piece.

3. In general, whenever there are no external forces, or when the external forces give a resultant of translation equal to zero, the second members of the equations [12] are nil, and the final quantity of motion of the centre of gravity is equal to its initial quantity. If the centre of gravity were originally at rest, it would remain at rest; if it possessed a certain velocity, it would retain that velocity, and move with a rectilinear and uniform motion.

4. An animal cannot move without the aid of the reactions exerted by the bodies with which it is in contact. Placed in space, and being in contact with no kind of body, it would vainly exert itself to move its centre of gravity.

5. The equations [12] also explain the effect of a *couple*. The two equal and contrary forces which form the couple give a resultant of translation equal to zero; consequently the couple has no influence upon the motion of the centre of gravity. If this point were originally at rest, it would remain at rest; and the motion produced by the couple can be merely one of rotation about an axis passing through the centre of gravity. See DAMMING.

GRINDSTONE. FR., *Meule, Pierre à aiguiser;* GER., *Schleifstein;* ITAL., *Mola;* SPAN., *Piedra de afilar.*

W. Muir's Apparatus for Grinding Edge Tools and other Articles.—This arrangement, Figs. 3335, 3336, consists in having two grindstones working in the same trough, and in supporting the shafts of the grindstones in bearings connected by a screw, which has a right-hand thread at one end, taking into a nut fixed to one bearing, and a left-hand thread taking into a nut in the other bearing. The grindstones are in contact with each other, and they are made to revolve in contrary directions, but at different velocities, so as to produce a rubbing action at the point where the peripheries are in contact; or the grindstones may be made to revolve in the same direction to produce the same rubbing action, the effect and object of which is to cause the inequalities on the periphery of one grindstone to be removed by the action of the other. A slight lateral motion is given to one or both of the grindstones, to assist in making the peripheries wear equally. The lateral motion may be given by a worm fixed on the grindstone shaft, taking into a worm-wheel, in the face of which is a crank-pin, giving motion to a lever, the vibrating end of which is connected to the end of the shaft by a clip. In some cases the grindstones may be made to swivel partly round, for the purpose of keeping the periphery true; or a piece of stone or other suitable material, moving to and fro, may be made to fit between the peripheries of the grindstones. The object is to cause the grindstones to keep each other in repair, and thereby obviating the necessity of turning the peripheries of grindstones when they become uneven, owing to the inequalities in the hardness of the surface.

3335.

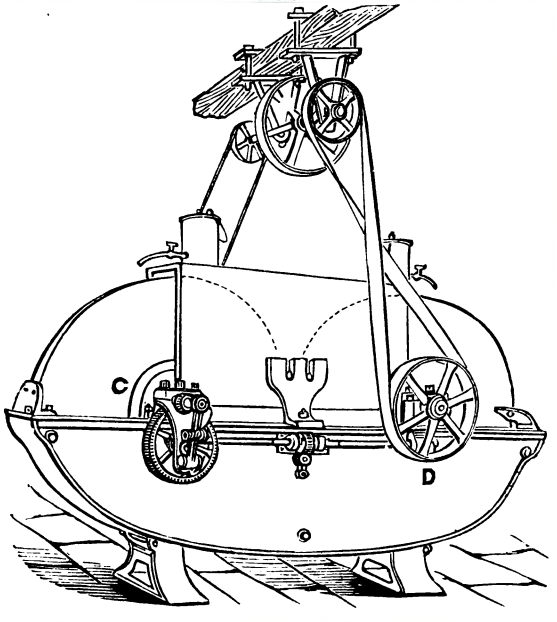

Fig. 3335 is a front elevation, and Fig. 3336 is a longitudinal, of one of Muir's grindstones. In Fig. 3336, *a* is a trough, which may be made of cast iron or other suitable material; *b* and *c* are two grindstones, revolving in bearings or pedestals *d*, bolted to the flanches of the trough *a*. The peripheries of the grindstones are in contact at the point *e*. One of these grindstones is driven by an open strap passing round the pulley b^1, and the other by a crossed strap passing round the pulley c^1. C D, Fig. 3335, show how the belts and pulleys are geared. When the grindstones are of the same diameter, the pulleys must be of different diameters, in order that there may be a rubbing action between the peripheries of the grindstones. This rubbing action has a tendency to keep the peripheries of both the grindstones cylindrical; but in order to produce this result more effectually, a lateral as well as a rotary motion are given to one or both of the grindstones, in the following manner;—Upon the shaft of the grindstone *c* is fixed a spur-pinion c^4, which gears into another pinion *f*, revolving on a stud fixed in a bracket d^1, bolted to one of the pedestals *d*; to the pinion *f* is fixed a boss. with a spiral groove f^1; in this groove a stud, projecting from the link *g*, enters; this link is supported in the bracket d^1, and its outer end is jointed to the lower end of the lever *h*; this lever vibrates on a stud fitting in the bracket d^1; its upper end is forked, and takes into a groove in the shoulder c^2, which is also fixed on the shaft of the grindstone *c*. By this arrangement it is evident that the rotary and lateral motions of the grindstone are simultaneous; for the pinion c^4 drives the pinion *f*, which in revolving moves the link *g* to and fro. This motion

is communicated to the lever *h*, and by it to the grindstone. When the grindstones diminish in diameter, the bearings *d* in which they revolve are gradually brought closer together, so as to keep the peripheries in contact, by the attendant turning the shaft *i*. This shaft is furnished with two

3336.

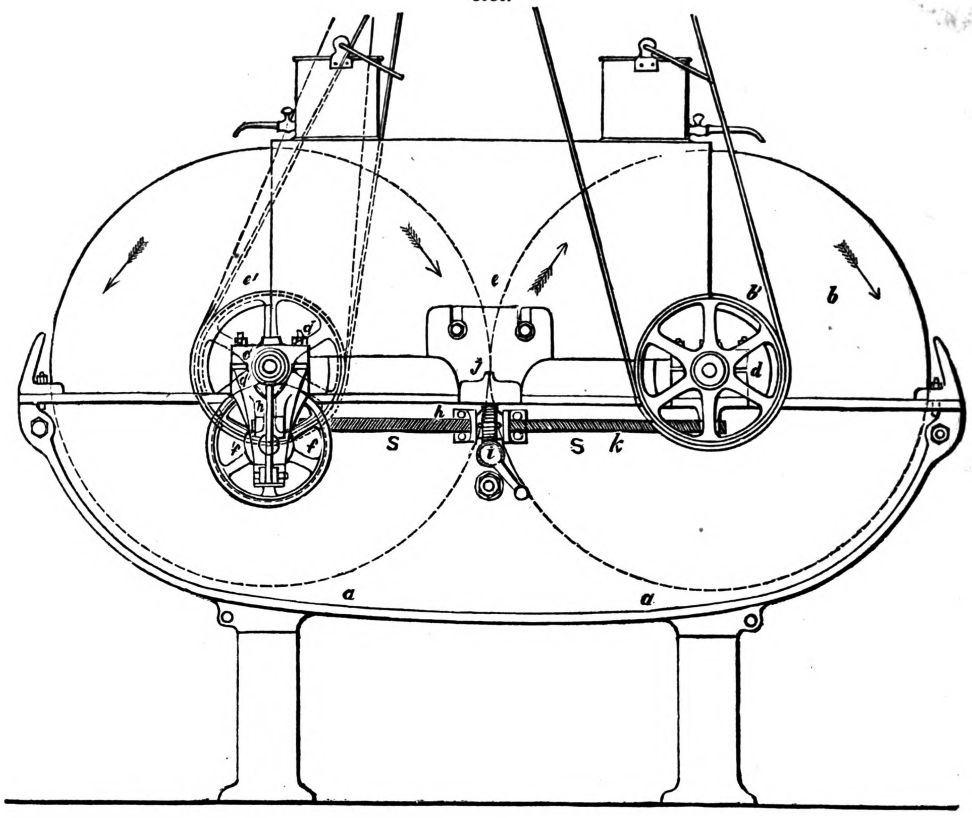

worms taking into the wheels *j*, fixed on the screws *k*; each of these screws is made with a right-handed thread at one end, and a left-handed thread at the other; consequently, when the shaft *i* is turned in one direction it causes the pedestals *d* to approach, and when turned in the other direction it causes them to recede from each other; the rubbing produced by the peripheries of the grindstones moving at different velocities, and by the lateral motion, causes the inequalities on the peripheries of one stone to be removed by the other, thereby keeping them both in working condition. Instead of making the peripheries of the grindstones revolve at different velocities, and of giving a lateral to-and-fro motion to one or both of them, in some cases we may introduce a flat piece of stone, or other suitable material, between the peripheries of the grindstones at the point *e* in Fig. 3336, and give a to-and-fro motion to this piece of stone, the action of which on the peripheries of the grindstones would keep them true. The same object may also be obtained by causing one or both of the grindstones to swivel partly round, so as to produce a rubbing action on their peripheries. The stones may also be driven so that they revolve in the same direction; the peripheries at *e* in Fig. 3336 would then run in opposite directions, as shown by the arrows.

GRIST-MILL. Fr., *Moulin à drêche;* Ger., *Schrotmühle;* Span., *Molino para trigo.*

See Mills.

GROUND-AUGER. Fr., *Tarière à fond;* Ger., *Grundbohrer;* Ital., *Trivella;* Span., *Sonda.*

See Augers.

GUDGEON. Fr., *Tourillon;* Ger., *Drehzapfen;* Ital., *Perno;* Span., *Pivote.*

A *gudgeon* is the piece of iron in the end of a wooden shaft, on which it turns in a collar or on a gudgeon-block; formerly the part of any horizontal shaft on which it runs.

GUN-CARRIAGE. Fr., *Affût de canon;* Ger., *Geschütz Rampert;* Ital., *Affusto;* Span., *Cureña.*

Captain Scott's Gun-Carriage for Heavy Naval Ordnance.—Simple as the invention of a suitable gun-carriage for heavy naval ordnance may appear, yet, in attempting this apparently easy task, before R. A. E. Scott succeeded in accomplishing it, many ingenious inventors failed. Fig. 3337 represents Scott's 300-pounder carriage and slide. The running-in-and-out gear is shown in Fig. 3338, and consists of two endless chains, stretched over two pitch-wheels on each side of the slides, with a screw arrangement for tightening the chains. When the gun is required to be run in, the outside part, or toes, of the compressor-levers are pressed against the lower part of the box, as shown in Figs. 3338 and 3340, which is serrated on its upper edge, so as to fit between the pins of the chain links, and press them up against the serrated edge of the upper box. By this means

several of the pins of the chains are securely held by the whole force of the compressor *a a*, Fig. 3340; and as both parts of the box which clutch them are attached to the carriage, it is only necessary to turn the purchase at the rear end of the slides to draw the gun in or out. When either operation is finished, the handle of the compressor is turned, and the inner part, or heel, of the compressor-levers then performs the work of compressing. Thus one compressor performs the double duty of holding the gun on recoil, and of clasping the chains on both sides of the slide together with equal certainty and security; and this gear being always in place, and out of the way of every other working part, overcomes one of the difficulties previously experienced in working heavy guns at *sea*. Scott's carriage is fitted with two compressors, under the idea—however powerful and strong the working part may be—it is not safe to depend upon a single part.

3337.

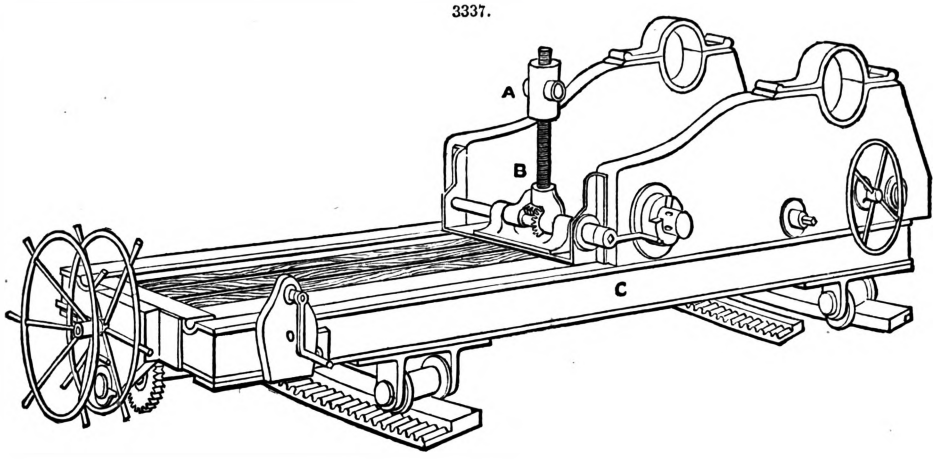

3338.

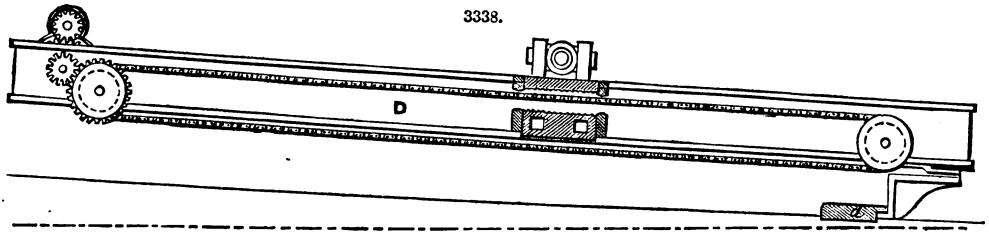

3339.

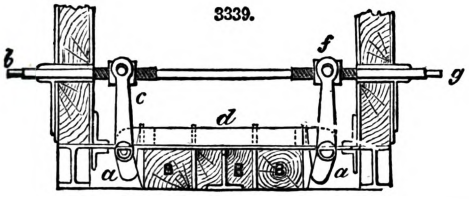

3340.

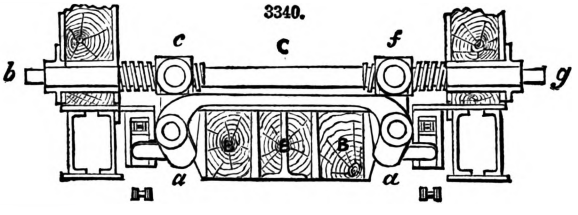

The fore compressor *b c a d a f g*, Fig. 3339, forcing the beams B, B, B, together, and retaining them firmly in their places, is more powerful than the aft compressor shown in Fig. 3340. The fore compressor is placed on a higher level than the other, and hence the upper arms *a c*, *a f*, are longer than those shown in the aft compressor, Fig. 3340. The shaft *b g* upon which these arms work passes through each side of the carriage, and projects beyond; it is provided with a right and left-handed screw, to which motion is given by turning a handle shipped upon the shaft at either side of the gun, and thus opening or closing the lever-arms. The fore compressor is applied when extra holding power is required, and is useful as an additional means of readily checking the gun when running in or out in a heavy roll. Scott's plan of raised racers was adopted in H.M.'s ships Research, Minotaur, and Bellerophon, but in both the latter ships the centres of the racers were let down into the deck $\frac{3}{4}$ of an inch, and their ends raised so as to admit the guns to be trained round on a horizontal plane. The edges nearest the ship's side of the front racers were slotted to receive a strong hook *d*, Fig. 3338, which held the slide securely down to the deck, and rendered the gun secure in any sea. In the Minotaur, as well as in the Research, the front of the slide was further secured by a massive metal block, working in a grooved racer; but after the trial of firing a 12-ton gun nineteen times at the top of the roll in the Minotaur without this fastening, it was considered unnecessary, more especially as a pivot-bar, or flap, of the same strength as the usual service elongated V-flap, had been fitted to the pivot-point in the port as a preventer. In the Minotaur, a gun on this mounting trained 31° each way; but no other gun with the V-flap

and fixed pivot obtained so much as 29°. A similar result was observed in the Bellerophon, where, although the port was closed up from 2 ft. 9 in. to 2 ft. 1 in., the training was still 31° each way. The training of the other guns in 2 ft. 9 in. apertures was only 30°. Fig. 3341 shows how the Minotaur's port was closed on the lower side 14 in., the corners being rounded and made much higher.

3341.

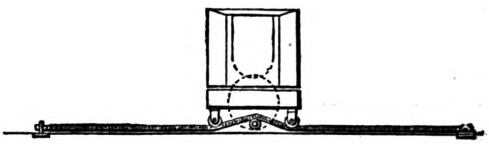

The application of this important feature of Scott's system of mounting had a similar effect to throwing the lower port-sill a mean of 16 in. higher out of the water, thus adding greatly to a vessel's capabilities of fighting in a sea-way. Had a small half-port been fitted up, 7½° of depression could have been obtained in the Bellerophon, and 9° in the Minotaur, when wanted. This woodwork rendered protection to the loaders against the spray of the sea; nor was any disadvantage found, but the contrary, from closing up the port, the rapidity of the fire in the Minotaur with the 150-lb. ball being more than double that previously obtained, and the quickness in the Bellerophon, with the 250-lb. rifled shot, being equally unmatched. The elevating gear A B C, Fig. 3337, consists of a screw worked through a box, fitting inside another box which is fastened to the gun. These boxes have a washer interposed between their surfaces, and the outer box is open at the bottom; hence, when the gun is fired with its muzzle above the upper port-sill, the outer box is lifted several inches up from its resting place on the inside box, when the muzzle dipped under the port-sill, and then dropped easily down again upon the washer on the top of the inner box. By this contrivance the weight of the breech of the gun is received without any damaging shock, and the jar of the discharge is absorbed likewise. Any fixed elevation can also be given and maintained with certainty in bombarding. Motion is communicated to the screw through two bevelled wheels, shown at B, Fig. 3337, suitably supported upon the bottom of the carriage. By means of handles worked upon each side, a rapid touch may be given in elevating the gun; in case the captain should find it rolling up or down, his sights would not come on with the object to be fired at.

Running-in-and-out Eccentrics.—For Scott's carriage, eccentrics, which had to stop to allow them to pass the centre, and remain fixed in that position, were devised. This prevented the necessity of having the men to hold on to them in running the gun in or out; the arrangement also allows the crew on each side to hold on by the ropes which were attached to the ends of the levers of the eccentrics, if required, and so keep the eccentrics ready to drop the carriage off its rear rollers or trucks. The levers which work the eccentrics are upon the sides of the carriage, and so fitted that the screw is prevented from injury in case the gun should go off in being run out. Should the eccentrics be slacked up, the carriage would drop upon the slides, with a surface of wood everywhere touching a surface of iron, as dropping the rear of the carriage lifts the front trucks off the slides; and as both these surfaces are rough, there would then be an absence of sliding sufficient to keep the carriage and gun from moving in a roll. The lever-handles are fitted with bands round the drumhead of the eccentrics, which hold them securely when the levers are let drop out of use. In consequence of these arrangements, every part of the mounting is in place, ready for use: the man who is termed No. 7, having no mechanical labour to perform, can give his whole attention to keeping the gun pointed upon the object, which can be done by means of the rack and pinion, so steadily as not to interfere with the loading. The requisite elevation in case of a change in the heel of the ship can also be given with the same ease and steadiness; and all these operations can be performed simultaneously.

The rear compressor, Fig. 3340, being on a lower level than the fore one, Fig. 3339, and being also considerably below the level of the proposed height for the lower port-sill, would probably escape injury should the front compressor be hit. Although the rear compressor is less powerful, it is more important than the other, being employed to catch the chains in running the gun in and out, and being also the principal working compressor for holding the gun on being fired. The only addition made to this compressor, to enable it to perform also the duty of clutching the chain, consists of small pieces, or toes, on the outside of the lever-arms *c a*, *f a*, Fig. 3340. These toes are shown at *a a*, Fig. 3340, in which the rear compressor is shown in section, compressing the balks B, B, B, preparatory to firing, and consequently with the toe-pieces at *a a* clear of the lower box. The balks of wood B, B, B, upon which the compressors act are slightly tapered longitudinally towards the front of the slide, and are very much tapered in their depth.

The Moncrieff System of Gun-Carriage.—We shall in this place only explain the Moncrieff system of working artillery as far as it relates to coast defence.

This system is based on sound philosophical principles, and may be investigated under the three following heads:—

1st. The mechanical principle of the gun-carriages.

2nd. The form internal and external of the batteries.

3rd. The selection of ground for placing the batteries, and the arrangement for working them to the greatest effect; or, in other words, the *tactics* of defence for positions where the system is employed.

The principle on which the carriage, Fig. 3342, is constructed is the first and most important part of the new system, because on it depends the possibility of applying the other parts. This principle may be shortly stated as that of utilizing the force of the recoil in order to lower the whole gun below the level of the crest of the parapet, so that it can be loaded out of sight and out of exposure, while retaining enough of the force above referred to to bring the gun up again into the firing or fighting position. This principle belongs to all the carriages; but the forms of these carriages, as well as the method in which this principle is applied, vary in each case. For instance, in siege guns, where weight is an element of importance, the recoil is not met by counterpoise.

With heavy garrison guns, on the other hand, which when once mounted remain permanent in

their positions, there is no objection to weight. In that case, therefore, the force of gravity is used to stop the recoil, because it is a force always the same, easily managed, and not likely to go wrong; and as these carriages are employed for the most powerful guns, it is a great advantage to have the most simple means of working them.

3342

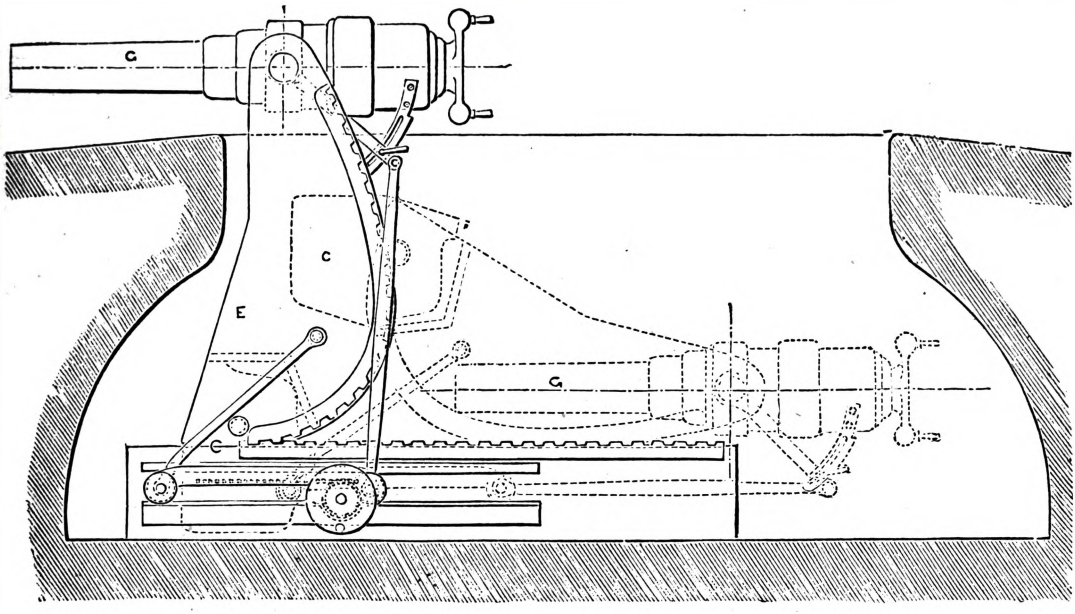

Formerly the principal difficulty arose from the enormous and hitherto destructive force of the recoil of powerful guns; and here we shall point out the manner in which that difficulty is overcome.

That part of the carriage, E, which is called the elevator may be spoken of and treated as a lever; this lever has the gun-carriage axle at the end of the power-arm, and the centre of gravity of the counter-weight C at the end of the weight-arm, there being between them a moving fulcrum.

When the gun G is in the firing position, the fulcrum on which this lever rests is almost coincident with the centre of gravity of the counter-weight C, and when the gun is fired the elevators roll on the platform, and consequently the fulcrum, or point of support, travels away from the end of the weight-arm towards the end of the power-arm, or, in other words, it passes from the counter-weight C towards the gun G.

Notice the important result of this arrangement.

When the gun is fired, its axle passes backwards on the upper or flat part of a cycloid. It is free to recoil, and no strain is put upon any part of the structure, because the counter-weight commences its motion at a very low velocity. As the recoil goes on, however, the case changes completely, for the moving fulcrum travels towards the gun, making the weight-arm longer and longer every inch it travels. Thus the resistance to the recoil, least at first, goes on in an increasing progression as the gun descends, and at the end of the recoil it is seized by a self-acting pawl or clutch.

The recoil takes place without any jar, without any sudden strain, and its force is retained under the control of the detachment to bring up the gun to the firing position at any moment they may choose to release it. The recoil, moreover, however violent at first, does not put injurious horizontal strain on the platform. In Captain Moncrieff's experiments at Edinburgh with a 32-pounder, he found that so slight was the vibration on the platform caused by firing, that the common rails on which the elevators rolled in that experiment, and which were only secured in the slightest manner, did not move from their position; nor even when heavy charges or double shot were used, did sand and dust fall off their curved tops. See p. 1716.

At a still earlier experiment made with a model of a 95-cwt. gun, the model was fired on the ice with excessive charges, and nevertheless remained stationary.

This valuable concomitant of the system cannot be appreciated fully without referring to the difficulties that have been experienced, and are now felt, in getting pivots, platforms, &c., on the ordinary system strong enough to mount the new artillery, where the recoil is stopped by friction applied directly by means of what are technically called *compressors* attached to the platform. See BATTERY. ORDNANCE.

GUN-COTTON. FR., *Coton azotique;* GER., *Schiessbaumwolle;* ITAL., *Pirosillina;* SPAN., *Algodon-pólvora, Piroxilina.*

See GUNPOWDER.

GUN-METAL. FR., *Métal de canon;* GER., *Kanonenmetall;* ITAL., *Bronzo;* SPAN., *Metal de cañones.*

See ALLOYS. ARTILLERY.

GUNNERY. Fr., *Science de l'artillerie*; Ger., *Artillerie Wissenschaft*; Ital., *Artiglieria*; Span., *Ciencia del artillero*.

Gunnery is that department of military science which comprehends the theory of projectiles and the manner of employing *ordnance*.

When great minds conspire to perpetuate a fallacy, it has always been a difficult matter to clear that fallacy away. We know of no subject capable of being submitted to mathematical investigation that has received a greater amount of fallacious treatment, and that too, by great minds, than the motion of projectiles. Besides, school-taught pedants, thimble-rigging with mathematical symbols, reduced this branch of military science to a deplorable state of uncertainty, and left the artillerist to play a game of blindman's-buff with his guns. Initial velocities have been little more than guessed at, the resistance of the air overrated, and the force of gravity misstated. It is well known that General Anstruther's physical courage is great, but, with these facts before him, his moral courage must be as great as his physical, to propound and develop a new system of gunnery; but "his heart is in his work, and the heart giveth grace unto every art." The system introduced by General Anstruther, which is practical and easily applied, must give correct results within the range of his experiments, without offering any special theory about initial velocities, the resistance of the air, or the force of gravity; indeed, in Anstruther's system are collected all these elements.

In the following fifty-eight paragraphs Major-General P. Anstruther lays the foundation, and illustrates the practical application of his system.

In the first paragraph he denies the difficulty of drawing the trajectory of a projectile.

2. Defines what it is that we want to do.

3. States our want of data for the purpose.

4. Expresses a wish that we may get them.

5. Describes our intended demonstration.

6. Shows how Colonel Boxer says it is to be done, algebraically.

7. Admits his demonstration, but requires it in numerals.

8. Names an elevation and time of flight, 45° and 27·1 seconds.

9. Gives the ascent, descent, and range, in a vacuum.

10. Defines Fig. 3343, the triangle for the given elevation.

11. Graduates the ascent of this triangle, unresisted.

12. Graduates the descent of this triangle, unresisted.

13. Proposes comparison with recorded fact.

14. States the recorded range for elevation 45° in 27·1 seconds.

15. Shows the reduction produced by the resistance of the air.

16. Infers the power of measuring the resistance.

17. Shows the value of $\frac{1}{2}g$ for 27·1 seconds of time.

18. Shows the varying value of $\frac{1}{2}g$, as printed years ago.

19. Shows where this may be had, printed, *in extenso*.

20. Assumes that we now know the true law of gravity.

21. Defines Fig. 3344, a parallelogram on Fig. 3343.

22. Defines the two lines added.

23. Applies the law of the composition and resolution of forces.

24. Why applied to our question.

25. Requires the graduation of the vertical descent.

26. Shows the graduation of the descent the same for all elevations.

27. The graduation of the vertical ascent varying with elevation.

28. At 90° elevation the two coincide exactly.

29. Proposes to apply this to our example.

30. Shows place of ball at end of 27·1 seconds, elevation 90°.

31. Shows additional time to be required for descent.

32. Shows that this will equally increase time of ascent.

33. Tries an addition of 6·9 seconds, it is too much.

34. Tries an addition of 6·8 seconds, which will do.

35. Therefore 27·1 + 6·8 = 33·9 seconds is the time for elevation 90°.

36. Therefore 761 ft. per second is the initial velocity.

37. Shows graduation of descent, for 0·9. 1·9, 2·9, 3·9, &c., &c., to 33·9.

38. Shows graduation of ascent, the inversion of the descent.

39. Describes Table A.

40. Shows how to draw the trajectory.

41. Shows the French Table of Ranges for 45° elevation with velocities.

42. Selects one for comparison with our theory, 10,699 ft.

43. Deduces the time of flight, and shows the oblique ascent.

44. Shows that 35·32 seconds is the time for elevation 90°.

45. Shows that 777 ft. a second is the velocity, compared with 784 ft. a second.

46. Shows that Table B gives ranges at 45° with velocities.

47. Shows the application of the instrument, Fig. 3345.

48. Supposes an example. Elevation 5°, range 1000 yds.

49. Works it out by the instrument, velocity 777 ft. a second.

50. Describes the method of working it out.

51. Shows the limits beyond which our data will not carry us.

52. Quotes a range from a Text-Book, a French range.

53. Puts it into English feet.

54. Shows the vertical descent and oblique ascent and time.

55. Finds the mean velocity.

56. Refers to Table C.

57. Finds the time for the mean velocity.

58. Deduces the final velocity and initial velocity.

1. There would be no difficulty whatever in determining the trajectory of any projectile, if the artillery officers could be persuaded to deduce the laws of their own science, gunnery, from the

recorded results of their own practice, instead of intrusting this, their first, and most important of all duties, to the professors of mathematics.

2. These men, however able and eminent, do not know what it is that the artillery require; they teach us how to calculate the trajectory for given elevation with given initial velocity; what we want to know is, how to determine the initial velocity from given range and elevation.

3. And this we could easily do if we had the data; but no book, either in the French or English language, affords reliable record of range for elevation with time of flight exceeding 34 seconds; we cannot therefore determine the trajectory for any initial velocity exceeding 800 ft. per second; but within that limit we can do it without any difficulty.

4. We shall offer one example, fully worked out, in the hope that the official advisers of governments may yet be induced to recommend the few, and comparatively cheap, additions to our practice tables, which are required to complete our professional knowledge; the results of private practice, under any circumstances, fail to carry with them the weight of authority requisite to establish the laws of science; were it otherwise, the experiments required should have been furnished long ago.

5. In working out the example selected, we shall show what would be the trajectory of a projectile, if not resisted by the atmosphere, and then we shall compare that calculation with the recorded results of actual practice with the same elevation, in the same time of flight.

6. To find the trajectory of a projectile in a vacuum, Colonel Boxer, in his treatise on Artillery, tells us, on p. 87, that we have only to "compound the motion produced by gravity, which, by the second law of motion, is the same as it would produce upon a body at rest, with the uniform motion in the line" of direction, "in order to obtain the actual motion of the shot upon the hypothesis assumed," that hypothesis being the leaving out of consideration for the present the resistance of the atmosphere.

7. Colonel Boxer proceeds to prove, algebraically, that the curve resulting is a true parabola. We accept his demonstration, but for our present purpose it is necessary to show, by the use of numerals, the application of this theory to some specified elevation and time of flight, to enable us to draw a comparison between the curve of calculation and the recorded results of actual practice.

8. For this purpose let us suppose a ball fired at 45° elevation, seen to strike the plane at the expiration of 27·1 seconds of time of flight: putting out of consideration for the present the resistance of the atmosphere, we are to draw the trajectory of this ball; we know that it is a parabola, but we require to show its measurements.

9. The time of flight being 27·1 seconds, the fall by gravity, unopposed by the atmosphere, will be equal to $27{\cdot}1^2 \times 16\frac{1}{12} = 11811{\cdot}76$ ft., and as the elevation is 45°, the horizontal range will be equal to the vertical descent, which is the fall by gravity, therefore the horizontal range is also 11811·76 ft., and the oblique ascent is the square root of the sum of the squares of these two, it is 16704·35 ft.

3343.

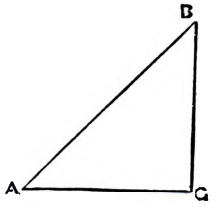

10. Let A B G, Fig. 3343, be a right-angled triangle, in which the sides are respectively 11811·76 ft., 11811·76 ft., and 16704·35 ft.; within these three lines we are to inscribe the trajectory of a ball fired from A, towards B, seen to strike G at the expiration of 27·1 seconds of time; leaving out of consideration for the present, the resistance of the atmosphere.

11. We divide the length of A B by the time of flight, the quotient $\frac{16704{\cdot}35}{27{\cdot}1} = 616{\cdot}396775$ ft. a second, is the uniform velocity of the oblique ascent; we therefore lay off upon A B, in succession from A, 27 equal spaces, each 616·396775 ft., to show the uniform motion in the line of direction, with which, as Colonel Boxer tells us, we are to compound the motion produced by gravity.

12. From each of the points so marked, in succession, we let fall a perpendicular, denoting by its length the fall by gravity, $t^2 \times 16\frac{1}{12}$ ft., in the number of seconds of time, t, elapsed since the ball left A on its passage towards B; a line joining the lower ends of all these perpendiculars is the trajectory required, the parabola.

13. We are now to compare this with recorded fact.

14. The 13-in. sea-service iron mortar, at elevation 45°, with a charge which gave 27·1 seconds time of flight, had a range of only 3327 yds., or 9981 ft.; if we apply this to Fig. 3343, we have A G = 9981 ft., B G = 9981 ft., and A B = 14115·26 ft.

15. Each side has been reduced by the resistance of the atmosphere in the proportion of 11811·76 to 9981 ft. in 27·1 seconds.

16. Such a reduction in the magnitude of B G, the fall by gravity in the time of flight, affords us a ready measure of the effect of the resistance of the atmosphere.

17. The fall by gravity in 27·1 seconds of time would be, in a vacuum, equal to $27{\cdot}1^2 \times 16{\cdot}083333 = 11811{\cdot}76083333$, and in the atmosphere it is $27{\cdot}1^2 \times 13{\cdot}590501 = 9980{\cdot}99983941$; this last we shall call $27{\cdot}1^2 \times 13{\cdot}59$.

18. It is some years since General Anstruther offered to the service Table D, showing the fall by gravity as modified by the resistance of the atmosphere, in which the varying value of the multiple of the square of the time was deduced from the measure of the fall in 27·1 seconds as follows, namely;—

For	3 seconds of time the fall is	3^2	$\times$ 16
	13 " "	13^2	$\times$ 15
	23 " "	23^2	$\times$ 14
	24 " "	24^2	$\times$ 13·9
	25 " "	25^2	$\times$ 13·8
	26 " "	26^2	$\times$ 13·7
	27 " "	27^2	$\times$ 13·6
	27·1 " "	$27{\cdot}1^2$	$\times$ 13·59, as above.

19. Table D shows the fall by gravity, together with the velocity which a ball would acquire by the fall, for the tenth parts of seconds of time from one-tenth of one second to fifty seconds.

20. We shall now suppose the true graduation of B G, the vertical descent in Fig. 3343, to be known to us; we shall deduce from it the graduation of the oblique ascent A B, the first step of which, when found, is the measure of the initial velocity of the ball.

21. To deduce the graduation of the oblique ascent from that of the vertical descent, we again draw the triangle A B G exactly the same in all respects as that in Fig. 3343; but we now add a line A Y, parallel to and equal to B G, and we join B Y, so that A G B Y in Fig. 3344 is a parallelogram, of which A B is the diagonal, and in which we know the magnitude of every line.

3344.

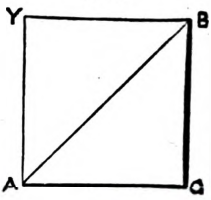

22. The line A Y now added represents the vertical ascent of the ball during the time of flight; this line and the line B G are added for the purpose of bringing the question within the scope of the law of the composition and resolution of forces.

23. That law teaches us that the force which produces the motion represented by the diagonal A B, is the resultant or equivalent of two forces producing motions represented both in magnitude and direction by the two sides A Y, A G, of the parallelogram, of which A B is the diagonal.

24. If therefore we could determine the graduation for time of the line A Y, we could at once find that of A B; and we could then, to use Colonel Boxer's words once more, "compound the motion produced by gravity with the motion in the line" of direction, "in order to obtain the actual motion of the shot."

25. We desire to determine the graduation of A Y, and we know that it is equal in magnitude to B G; it is 9981 ft.; the duration of the motion which it represents is the same as in B G, 27·1 seconds of time, and still it is quite certain that the graduation of A Y cannot be that of B G read in inverse order of succession.

26. The graduation of B G is the same for any one number of seconds of time of flight, whatever be the elevation, as it is the fall by gravity in the time of flight t; the graduation of this line is always an increasing series or progression, it must always commence in the same manner; if the time of flight is four seconds, the graduation of the descent will always be 1, 3, 5, 7, total 16 spaces of $\frac{1}{2}g$, whether the elevation be 5° or 85°.

27. But the graduation of A Y varies with every change of elevation; the motion represented by this line is necessarily exactly equal in magnitude and in duration to the motion represented by the parallel B G, but it will always be differently graduated; in four seconds' time of flight the ascent will always be 16 spaces, but they will be divided into 7, 5, 3, 1, total 16, for elevation 89° 59′ 58″; and into 4, 4, 4, 4, total 16, for elevation 0° 00′ 02″.

28. At elevation 90° the oblique ascent and the vertical ascent become merged in one, and, as we have just seen, the graduation is the inverted reading of the descent; we are therefore enabled to determine its graduation by referring to the Table described in our paragraph 19, which we shall suppose to be in the hands of our reader.

29. We now return to our selected example, the range 9981 ft. at elevation 45°; we showed in paragraph 14 that the oblique ascent was 14115·26 ft., the simultaneous vertical descent 9981 ft.

30. If we now change the elevation from 45° to 90°, the ascent in 27·1 seconds will again be equal to 14,115 ft., the descent again 9981 ft., therefore at the expiration of 27·1 seconds of time the ball will be at a height of 4134·26 ft. vertically over the point A from which it was projected.

31. To enable this ball to reach the ground, addition must be made to the time, and as the ascent and descent are simultaneous motions, additions to the time of either bring equal addition to the time of the other.

32. But equal addition to the time by no means brings equal addition to the magnitude; the addition of one second will bring an increase of 16 ft. to the ascent and of 671 ft. to the descent; a very few such additions will bring the two to equality of magnitude, and we proceed to try how many will do it.

33. We try an addition of 6·9 seconds, making the time of flight 27·1 + 6·9 = 34 seconds,

then we find in our Table that $34^2 \times 12{\cdot}9 =$		14912·4
We also find that $6{\cdot}9^2 \times 15{\cdot}61 =$	743·1921	
which we add to the ascent,	14115·26	
making the ascent	14858·4521	= 14858·4521

so that the descent now exceeds the ascent by 53·9479 ft., and we must try a less addition.

34. We try an addition of 6·8 seconds, making the time of flight 27·1 + 6·8 = 33·9 seconds,

and we find in our Table that $33{\cdot}9^2 \times 12{\cdot}91 =$		14836·3011
We also find that $6{\cdot}8^2 \times 15{\cdot}62 =$	722·2688	
which we add to the ascent	14115·26	
making the whole ascent	14837·5288	= 14837·5288

the ascent now exceeds the descent by 1·2277 ft., but we are satisfied.

35. The fall in 34 seconds we have seen to be 14912·4
and „ 33·9 „ „ 14836·3011

the differences 0·1 second of time and 76·0989 ft. indicate a velocity of 760·989, say 761 ft. a second.

36. Therefore the initial velocity of the ball, which at 45° elevation ranged 3327 yds., was 761 ft. a second.

37. We can now give the graduation of the ascent from our Table; we read in it that the fall in

29·9 seconds is	$29{\cdot}9^2 \times 13{\cdot}31 = 11899{\cdot}2731$	difference	713·767
30·9 „	$30{\cdot}9^2 \times 13{\cdot}21 = 12613{\cdot}0401$	„	727·827
31·9 „	$31{\cdot}9^2 \times 13{\cdot}11 = 13340{\cdot}8671$	„	741·287
32·9 „	$32{\cdot}9^2 \times 13{\cdot}01 = 14082{\cdot}1541$	„	754·147
33·9 „	$33{\cdot}9^2 \times 12{\cdot}91 = 14836{\cdot}3011$		

38. The inverted reading of this Table is the graduation of the ascent; it commences thus, in

	Cumulative.	Gradual.						
1 second	754·147	754·147						
2 seconds	1495·434	741·287	1st difference	12·86				
3 „	2223·261	727·827	„	13·46	2nd difference	0·6		
4 „	2937·028	713·767	„	14·06	„	0·6	3rd difference	0·0
5 „	3636·135	699·107	„	14·66	„	0·6	„	0·0

39. We give, Table A, the graduation of the ascent for even seconds of time, for initial velocity 761 ft. a second, and the simultaneous descent; we also give thirty-three different ranges, together with the angles of elevation, by the use of which these ranges would be obtained.

40. In any right-angled triangle whatever, if the reader will mark off upon the hypothenuse the distances given as ascents, and let fall perpendiculars to denote the fall by gravity, then a line joining the lower extremities of all these perpendiculars is the trajectory, which we said in paragraph 3 we could draw without any difficulty.

41. In the Aide Mémoire a l'usage des Officiers d'Artillerie, p. 431, we find a Table containing thirty different ranges for elevation 45°, with the initial velocity for each, but not the time of flight.

42. The second of these ranges is 3261 mètres, its initial velocity 239 mètres; reducing these to English measures, we have 10,699 ft. of range, with 784·136 ft. velocity.

43. Here the oblique ascent is $10699\sqrt{2} = 15130{\cdot}7$, and the vertical descent, or fall by gravity, is 10,699 ft., which indicates a time of flight of 28·17 seconds for $28{\cdot}17^2 \times 13{\cdot}483 = 10699{\cdot}4198187$.

44. An ascent of 15130·7 ft. in 28·17 seconds is what we have to graduate; we find that a descent of 35·32 seconds will be as follows, namely;—

$35{\cdot}32^2 \times 12{\cdot}768 = 15928{\cdot}1106432$ ft., the time being 28·17,

subtract and add 28·17 2·817

the differences $7{\cdot}15^2 \times 15{\cdot}585 = 796{\cdot}7430625$

show a fall in 28·17 seconds of 15131·3675807 ft.,

which is only 8 in. in excess of the ascent.

45. The velocity acquired by a fall of this duration is thus found;—

from	$35{\cdot}32^2 \times 12{\cdot}768$	=	15928·1106432
deduct	$35{\cdot}31^2 \times 12{\cdot}769$	=	15920·3394009
the differences being	− 0·01,	0·001, and	7·7712423,

indicate a velocity of 777·124 ft. a second, to compare with 784·136 ft. a second, as given in the Aide Mémoire.

46. As no book in the English language gives us any record of initial velocity for range and elevation, we give, in Table B, thirty ranges for 45° elevation, with the time of flight calculated, and the initial velocity deduced; and in the same page, for convenience of comparison, we give Table C, named in paragraph 41.

47. We give, Fig. 3345, a drawing of a very simple instrument, by which, when made to a larger scale, any rifleman may at once draw the trajectory of his bullet, and read off its initial velocity, and the angle of its descent.

48. For instance, suppose a ball fired at elevation 5°, its range measured is 1000 yds. exactly. Then the range being 3000 ft., the oblique ascent is 3011·4 ft., the vertical descent or fall by gravity is 262·466 ft., therefore the time of flight is 4·06 seconds, very nearly.

49. Dividing the oblique ascent by the time of flight, we have $\frac{3011{\cdot}4}{4{\cdot}06} = 741{\cdot}7$ ft. a second, the mean velocity of the ascent. The Table described in our paragraph 19, of which the instrument described in paragraph 47 and shown in Fig. 3345 is a portable epitome, shows that a velocity of 741·7 ft. is the result of a fall of 32·85 seconds;

to this we add half the time of flight 2·5 seconds,

and the sum of the two, 35·35 seconds, is the time of flight for this velocity at 90° elevation; the Table shows us that the velocity would be 777 ft. a second, roughly.

50. For all elevations usually employed with rifles or field artillery, the instrument shown in Fig. 3345 would enable the student to draw the trajectory at once; supposing his instrument to be made on a sufficiently large scale, he lays the mean velocity of the ascent, as found by dividing its magnitude by the time of flight, exactly against the centre of the hypothenuse of the triangle, calculated in paragraph 48, and marks off all the fifty spaces, twenty-five on each side, which will form the graduation of the hypothenuse, lets fall forty-nine perpendiculars to denote the fall by gravity, and joins the fifty points by a curve line, which is the true trajectory to the tenths of seconds of time.

51. But the instrument will not serve for any velocities beyond 800 ft. a second, because, as said in paragraph 4, we have not the data, and private experiments are not authoritative.

52. The want of such an instrument is very strikingly shown by an error contained in the clever little Text-Book for officers, sent to the Schools of Musketry, published by authority.

53. We read, in p. 8, that it was found in France that the range of the common percussion musket, with the regulation charge, at an angle of from 4° to 5°, was 640 yds., or 1920 ft., and that the usual velocity was "some 500 yds. per second," or, in our usual mode of expressing it, 1500 ft. per second.

54. We shall show how far from correct this is. Taking the elevation as 4°, then we multiply the range by the tangent of the elevation, $1920 \times \tan. 4° = 134{\cdot}26$ ft., for the fall by gravity in the time of flight, which is therefore 2·9 seconds ($2{\cdot}896^2 \times 16{\cdot}0104 = 134{\cdot}276$) as the time of flight, and we find the oblique ascent, $1920 \times$ secunt $4° = 1924{\cdot}7$ ft.

55. Dividing the oblique ascent by the time of flight, we have 663·7 ft. a second as the mean velocity of the ascent.

56. Our instrument is only graduated for seconds, as shown in Fig. 3345, but the Table quoted in paragraphs 18 and 19 shows how it would be read if graduated to the tenth parts of seconds, which we shall suppose to be done.

57. We find that a fall of 27·15 seconds would give a velocity of 663·9 ft. a second, then if we add half the time of flight, $\frac{2{\cdot}9}{2} = 1{\cdot}45$, to the time for the mean velocity, 27·15 seconds, we have 28·6 seconds as the time for the initial velocity, and the difference between the same two is the time for the final velocity, 25·7 seconds.

58. Our Table D shows us that the velocity for 28·6 seconds is 687 ft., that for 25·7 seconds is 639·67 ft. a second; these contrast strongly with the 1500 ft. velocity quoted by the Text-Book from the French.

3345.

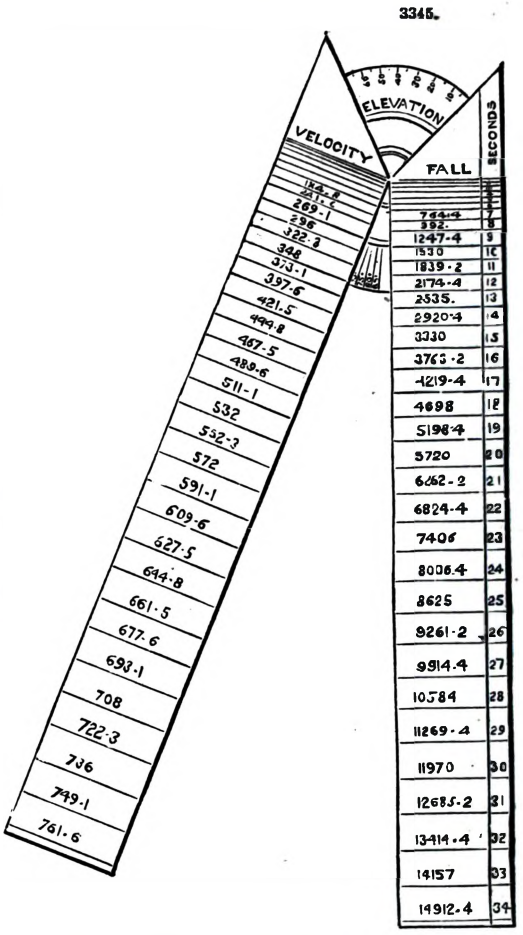

Instrument to facilitate the drawing of the trajectory of any ball at any elevation with any velocity.

TABLE A.—ASCENT, DESCENT, RANGES, AND ELEVATIONS FOR INITIAL VELOCITY, 761 FEET A SECOND.

Seconds of Time.	Ascent. Cumulative.	Ascent. Gradual.	Ascent. Differences.	Descent.	Range.	Elevation.
	feet.	feet.	feet.	feet.	feet.	° ′ ″
1	754·147	754·147	..	16·2	754·0	1 13 51
2	1495·434	741·287	12·86	64·4	1494·0	2 28 5
3	2223·261	727·827	13·46	144·0	2218·6	3 42 47
4	2937·028	713·767	14·06	254·4	2926·0	4 58 9
5	3636·135	699·107	14·66	395·0	3614·6	6 14 11
6	4319·982	683·847	15·26	565·2	4282·8	7 31 4
7	4987·969	667·987	15·86	764·4	4929·0	8 48 55
8	5639·496	651·527	16·46	992·0	5551·5	10 7 52
9	6273·963	634·467	17·06	1247·4	6229·5	11 28 4
10	6890·77	616·807	17·66	1530·0	6718·7	12 49 43
11	7489·317	598·547	18·26	1839·2	7260·0	14 12 55
12	8069·004	579·687	18·86	2174·4	7770·5	15 37 59
13	8629·231	560·227	19·46	2535·0	8248·5	17 5 1
14	9169·398	540·167	20·06	2920·4	8692·0	18 34 19
15	9688·905	519·507	20·66	3330·0	9098·6	20 6 7
16	10187·152	498·247	21·26	3763·2	9466·6	21 40 44

0·6

TABLE A—*continued.*

Seconds of Time.	Ascent. Cumulative.	Ascent. Gradual.	Ascent. Differences.	Descent.	Range.	Elevation.
	feet.	feet.	feet.	feet.	feet.	° ′ ″
17	10663·539	476·387	21·86	4219·4	9793·3	23 18 31
18	11117·466	453·927	22·46	4698·0	10076·0	24 59 50
19	11548·333	430·867	23·06	5198·4	10312·2	26 44 46
20	11955·54	407·207	23·66	5720·0	10498·4	28 35 0
21	12338·487	382·947	24·26	6262·2	10631·2	30 29 0
22	12696·574	358·087	24·86	6824·4	10706·5	32 30 49
23	13029·201	332·627	25·46	7406·0	10719·7	34 38 23
24	13335·768	306·567	26·06	8006·4	10664·9	36 53 47
25	13615·675	279·907	26·66	8625·0	10535·4	39 18 21
26	13868·322	252·647	27·26	9261·2	10322·8	41 53 50
27	14093·109	224·787	27·86	9914·4	10016·0	44 42 28
28	14289·436	196·327	28·46	10584·0	9600·	47 47 24
29	14456·703	167·267	29·06	11269·4	9055·0	51 13 2
30	14594·31	137·607	29·66	11970·0	8349·4	55 6 11
31	14701·657	107·347	30·26	12685·2	7431·3	59 38 14
32	14778·144	76·487	30·86	13414·4	6200·0	65 11 31
33	14823·171	45·027	31·46	14157·0	4393·8	72 45 27
33·9	14836·3011	12·967	32·06	14836·3	0·0	90 0 0

0·6

TABLE B.—RANGES AT 45° ELEVATION, WITH THE TIMES OF FLIGHT DEDUCED, AND THE INITIAL VELOCITY DETERMINED.

Range and Fall.		Time of Flight.	Oblique Ascent.	Unexpired Time of Ascent.	Time of Flight at Elevation 90°.	Vertical Ascent.	Initial Velocity
yards.	feet.						
100	300	4·3485	424·26	0·903	5·253	435·29	162·87
200	600	6·2	848·53	1·31	7·51	876·96	228·0
300	900	7·61	1272·79	1·64	9·25	1316·52	275·8
400	1200	8·82	1697·06	1·93	10·75	1759·54	315·2
500	1500	9·9	2121·32	2·16	12·06	2195·33	350·0
600	1800	10·88	2545·58	2·39	13·27	2636·64	379·0
700	2100	11·785	2969·84	2·615	14·4	3081·37	407·0
800	2400	12·635	3394·11	2·815	15·45	3522·05	432·0
900	2700	13·436	3818·37	3·004	16·44	3961·13	454·8
1000	3000	14·21	5242·63	3·19	17·4	4408·19	476·4
1100	3300	14·93	4666·89	3·37	18·3	4845·86	496·0
1200	3600	15·63	5091·16	3·53	19·16	5280·45	514·3
1300	3900	16·305	5515·42	3·725	20·03	5736·0	532·7
1400	4200	16·96	5939·68	3·9	20·86	6185·0	550·0
1500	4500	17·59	6363·96	4·06	21·65	6625·39	565·0
1600	4800	18·207	6788·22	4·22	22·427	7070·4	580·0
1700	5100	18·81	7212·48	4·38	23·19	7518·65	595·0
1800	5400	19·39	7636·75	4·53	23·92	7957·79	608·0
1900	5700	19·964	8061·01	4·7	24·664	8412·6	621·0
2000	6000	20·521	8485·28	4·88	25·41	8883·0	634·0
2100	6300	21·0695	8909·55	5·0	26·0695	9209·32	646·0
2200	6600	21·605	9333·81	5·15	26·75	9749·54	657·3
2300	6900	22·13	9758·07	5·3	27·43	10200·35	668·5
2400	7200	22·65	10182·33	5·45	28·1	10651·84	679·0
2500	7500	23·16	10606·6	5·6	28·76	11103·48	689·5
2600	7800	23·66	11030·86	5·74	29·4	11547·85	700·0
2700	8100	24·15	11455·13	5·9	30·05	12005·42	708·7
2800	8400	24·64	11879·39	6·04	30·68	12454·79	717·6
2900	8700	25·12	12303·66	6·18	31·3	12902·52	726·4
3000	9000	25·593	12727·92	3·331	31·93	13362·91	735·0
3100	9300	26·06	13152·18	6·48	32·54	13813·77	743·0
3200	9600	26·521	13576·44	6·619	33·14	14262·0	751·0
3300	9900	26·979	14000·71	6·761	33·74	14714·8	758·2
3327	9981	27·1	14115·76	6·8	33·9	14836·3	761·0

TABLE C.—RANGES AT 45° ELEVATION, WITH THE TIMES OF FLIGHT DEDUCED, WITH THE INITIAL VELOCITIES DETERMINED BY M. LOMBARD.

From the Aide Mémoire a l'usage des Officiers d'Artillerie, p. 431.

Reduced to English Measures.

Velocity.	Range.	Time.	Velocity.	Range.	Time.	Velocity.	Range.	Time.
892·4	12431·34	30·65	679·15	8787·26	25·26	439·64	4252·05	17·06
784·14	10699·0	28·16	606·97	7565·76	23·26	364·18	3625·4	15·69
695·55	9225·9	25·95	544·63	6483·07	21·4	354·34	3064·36	14·35
623·37	7949·6	23·9	488·85	5538·17	19·65	318·25	2552·54	13·05
557·75	6807·9	21·96	439·64	4675·29	17·95	282·16	2103·06	11·8
501·98	5813·76	20·175	393·71	3891·15	16·28	249·35	1692·95	10·54
449·48	4911·5	18·43	347·78	3202·16	14·7	216·54	1328·77	9·3
400·27	4084·7	16·7	308·41	3238·25	14·78	285·44	1010·52	8·03
357·62	3369·5	15·1	269·03	2027·6	11·58	..	..	..
314·97	2710·0	13·46	229·66	1542·02	10·04	..	..	..
275·6	2129·3	11·86	..	..	..	..	..	..
226·26	1617·5	10·3	..	..	..	..	..	..

TABLE D.—THE FALL BY GRAVITY AS MODIFIED BY THE RESISTANCE OF THE ATMOSPHERE.

The square of the time of falling × by the substitute for $16\frac{1}{12}$.	Fall by gravity in the whole time.	Fall in each tenth of a second.	Velocity acquired.	The square of the time of falling × by the substitute for $16\frac{1}{12}$.	Fall by gravity in the whole time.	Fall in each tenth of a second.	Velocity acquired.
0·1² × 16·29	0·1629	0·4883	3·756	4·6² × 15·84	335·1744	14·5103	143·611
2 8	0·6512	·8131	7·007	7 3	49·6847	·8081	6·592
3 7	1·4643	1·1373	10·252	8 2	64·4928	15·1053	9·467
4 6	2·6016	·4609	13·491	9 1	79·5981	·4019	152·536
5 5	4·0625	·7839	16·724	5·0 ·80	95·	·6979	5·5
6 4	5·8464	2·1063	19·951	1 ·79	410·6979	·9933	8·456
7 3	7·9527	·4281	22·172	2 8	26·6912	16·2881	161·407
8 2	10·3808	·7493	25·387	3 7	42·9793	·5823	4·352
9 1	13·1301	3·0699	28·596	4 6	59·5616	·8759	7·291
1·0 ·20	16·2	·3899	31·8	5 5	76·4375	17·1689	170·224
1 ·19	19·5899	·7093	34·996	6 4	93·6064	·4613	3·151
2 8	23·2992	4·0281	38·187	7 3	511·0677	·7531	6·072
3 7	27·3273	·3463	41·372	8 2	28·8208	18·0443	8·987
4 6	31·6736	·6639	44·551	9 1	46·8651	·3349	181·896
5 5	36·3375	·9809	47·724	6·0 ·70	65·2	·6249	4·8
6 4	41·3184	5·2973	50·892	1 ·69	83·8249	·9143	7·696
7 3	46·6157	·6131	54·052	2 8	602·7392	19·2031	190·587
8 2	52·2288	·9283	57·207	3 7	21·9423	·4913	3·472
9 1	58·1571	6·2429	60·956	4 6	41·4336	·7789	6·351
2·0 ·10	64·4	·5569	64·1	5 5	61·2125	20·0659	9·224
1 ·09	70·9569	·8703	67·236	6 4	81·2784	·3523	202·091
2 ·08	77·8272	7·1831	70·367	7 3	701·6307	·6381	4·952
3 ·07	85·0103	·4953	73·492	8 2	22·2688	·9233	7·807
4 ·06	92·5056	·8069	76·611	9 1	43·1921	21·2079	210·656
5 ·05	100·3125	8·1179	79·724	7·0 ·60	64·4	·4919	3·5
6 ·04	108·4304	·4283	82·831	1 ·59	85·8919	·7753	6·336
7 ·03	116·8587	·7381	85·932	2 8	807·6672	22·0581	9·167
8 ·02	125·5968	9·0473	88·927	3 7	29·7253	·3403	221·992
9 ·01	134·6441	·3559	92·016	4 6	52·0656	·6219	4·811
3·0 ·00	144·	·6639	95·1	5 5	74·6875	·9029	7·624
1² × 15·99	153·6639	·9713	8·176	6 4	97·5904	23·1833	230·431
2 8	163·6352	10·2781	101·247	7 3	920·7737	·4631	3·232
3 7	173·9133	·5843	4·312	8 2	44·2368	·7423	6·027
4 6	184·4976	·8899	7·371	9 1	67·9791	24·0209	8·816
5 5	195·3875	11·1949	110·424	8·0 ·50	92·	·2989	241·6
6 4	206·5824	·4993	3·471	1 ·49	1016·2989	·5763	4·376
7 3	18·0817	·8031	6·512	2 8	40·8752	·8531	7·147
8 2	29·8848	12·1063	9·547	3 7	65·7283	25·1293	9·912
9 1	41·9911	·4089	122·576	4 6	90·8576	·4049	252·671
4·0 ·90	54·4	·7109	5·6	5 5	1116·2625	·6799	5·424
1 ·89	67·1109	13·0123	8·616	6 4	41·9424	·9543	8·171
2 8	80·1232	·3131	131·627	7 3	67·8967	26·2281	260·912
3 7	93·4363	·6133	4·632	8 2	94·1248	·5013	3·647
4 6	307·0496	·9129	7·631	9 1	1220·6261	·7739	6·376
5 5	20·9625	14·2119	140·624	9·0 ·40	47·4	27·0459	9·1

TABLE D—*continued.*

$T^2 \times g^1$.	Fall in the whole time.	Fall in each tenth of a second.	Velocity acquired.	$T^2 \times g^1$.	Fall in the whole time.	Fall in each tenth of a second.	Velocity acquired.
9·1² × 15·39	1274·4459	27·3173	271·816	16·1² × 14·69	3807·7949	44·8243	447·096
2 8	1301·7632	·5881	4·527	2 8	52·6192	45·0531	9·387
3 7	29·3513	·8583	7·232	3 7	97·6723	·2813	451·672
4 6	57·2096	28·1279	9·931	4 6	3942·9536	·5089	3·951
5 5	85·3375	·3969	282·624	5 5	88·4625	·7359	6·224
6 4	1413·7344	·6653	5·311	6 4	4034·7984	·9623	8·491
7 3	42·3997	·9331	7·992	7 3	80·1607	46·1881	460·752
8 2	71·3328	29·2003	290·667	8 2	4126·3488	·4133	3·007
9 1	1500·5331	·4669	3·336	9 1	72·7621	·6379	5·256
10·0 ·30	30·	·7329	6·	17·0 ·60	4219·4	·8619	7·5
1 ·29	59·7329	·9983	8·656	1 ·59	66·2619	47·0853	9·736
2 8	89·7312	30·2631	301·307	2 8	4313·3472	·3081	471·967
3 7	1619·9943	·5273	3·952	3 7	60·6553	·5303	4·192
4 6	50·5216	·7907	6·591	4 6	4408·1836	·7519	6·411
5 5	81·3125	31·0539	9·224	5 5	55·9375	·9729	8·624
6 4	1712·3664	·3163	311·851	6 4	4503·9104	48·1933	480·831
7 3	43·6827	·5781	4·472	7 3	52·1037	·4131	3·032
8 2	75·2608	·8393	7·027	8 2	4600·5168	·6323	5·227
9 1	1807·1001	32·0999	9·696	9 1	49·1491	·8509	7·416
11·0 ·20	39·2	·3599	322·3	18·0 ·50	98·	49·0689	9·6
1 19	71·5599	·6193	4·896	1 ·49	4747·0689	·2863	491·776
2 8	1904·1792	·8781	7·487	2 8	96·3552	·5031	3·947
3 7	37·0573	33·1363	330·072	3 7	4845·8583	·7193	6·112
4 6	70·1936	·3939	2·651	4 6	95·5776	·9349	8·271
5 5	2003·5875	·6509	5·224	5 5	4945·5125	50·1499	500·424
6 4	37·2384	·9073	7·791	6 4	95·6624	·3643	2·571
7 3	71·1457	34·1631	340·352	7 3	5045·0267	·5781	4·712
8 2	2105·3088	·4183	2·907	8 2	095·6048	·7913	6·847
9 1	39·7271	·6729	5·456	9 1	146·3961	51·0039	8·976
12·0 ·10	74·4	·9269	8·	19·0 ·40	198·4	·2159	511·1
1 ·09	2209·3269	35·1803	350·536	1 ·39	249·6159	·4273	3·216
2 8	44·5072	·4331	3·067	2 8	301·0432	·6381	5·327
3 7	79·9403	·6853	5·592	3 7	352·6813	·8483	7·432
4 6	2315·6256	·9369	8·111	4 6	404·5296	52·0579	9·531
5 5	51·5625	36·1879	360·624	5 5	456·5875	·2669	521·624
6 4	87·7504	·4383	3·131	6 4	508·8544	·4753	3·711
7 3	2424·1887	·6881	5·632	7 3	561·3297	·6831	5·792
8 2	60·8768	·9373	8·127	8 2	614·0128	·8903	7·867
9 1	97·8141	37·1859	370·616	9 1	666·9031	53·0969	9·936
13·0 ·00	2535·	·4339	3·1	20·0 ·30	720·	·3029	532·
1² × 14·99	72·4339	·6813	5·576	1 ·29	773·3029	·5083	4·056
2 8	2610·1152	·9281	8·047	2 8	826·8112	·7131	6·107
3 7	48·0433	38·1743	380·512	3 7	880·5243	·9173	8·152
4 6	86·2176	·4199	2·971	4 6	934·4416	54·1209	540·191
5 5	2724·6375	·6649	5·424	5 5	988·5625	·3239	2·224
6 4	63·3024	·9093	7·871	6 4	6042·8864	·5263	4·251
7 3	2802·2177	39·1531	390·312	7 3	097·4127	·7281	6·272
8 2	41·3648	·3963	2·747	8 2	162·1408	·9293	8·287
9 1	80·7611	·6389	5·176	9 1	207·0701	55·1299	550·296
14·0 ·90	2920·4	·8809	7·6	21·0 ·20	262·2	·3399	2·3
1 ·89	60·2809	40·1223	400·016	1 ·19	317·5299	·5293	4·296
2 8	3000·4032	·3631	2·427	2 8	373·0592	·7281	6·287
3 7	40·7663	·6033	4·832	3 7	428·7873	·9263	8·272
4 6	81·3696	·7429	7·231	4 6	484·7136	56·1239	560·251
5 5	3122·2125	·9819	9·624	5 5	540·8375	·3209	2·224
6 4	63·2944	41·3203	412·011	6 4	597·1584	·5173	4·191
7 3	3204·6147	·5581	4·392	7 3	653·6757	·7131	6·152
8 2	46·1728	·7953	6·767	8 2	710·3888	·9083	8·107
9 1	87·9681	42·0319	9·136	9 1	767·2971	57·1029	570·056
15·0 ·80	3330·	·2679	421·5	22·0 ·10	824·4	·2969	2·
1 ·79	72·2679	·5003	3·856	1 ·09	881·6969	·4903	3·936
2 8	3414·7712	·7381	6·207	2 8	939·1872	·6831	5·867
3 7	57·5093	·9723	8·552	3 7	996·8703	·8753	7·792
4 6	3500·4816	43·2059	430·891	4 6	7054·7456	58·0669	9·711
5 5	43·6875	·4389	3·224	5 5	112·8125	·2579	581·624
6 4	87·1264	·6713	5·551	6 4	171·0704	·4483	3·531
7 3	3630·7977	·9031	7·872	7 3	229·5187	·6381	5·432
8 2	74·7008	44·1343	440·187	8 2	288·1568	·8273	7·327
9 1	3718·8351	·3649	2·496	9 1	346·9841	59·0159	9·216
16·0 ·70	63·2	·5949	4·8	23·0 ·00	406·	·2039	591·1

TABLE D—*continued.*

$T^2 \times g^1$.	Fall in the whole time.	Fall in each tenth of a second.	Velocity acquired.	$T^2 \times g^1$.	Fall in the whole time.	Fall in each tenth of a second.	Velocity acquired.
$23 \cdot 1^2 \times 13 \cdot 99$	7465·2039	59·3913	592·976	$30 \cdot 1^2 \times 13 \cdot 29$	12040·8729	71·0183	709·456
2 8	524·5952	·5781	4·847	2 8	111·8912	·1631	710·907
3 7	584·1733	·7643	6·712	3 7	183·0543	·3073	2·352
4 6	643·9376	·9499	8·571	4 6	254·3616	·4509	3·791
5 5	703·8875	60·1349	600·424	5 5	325·8125	·5939	5·224
6 4	764·0224	·3193	2·271	6 4	397·4064	·7363	6·651
7 3	824·3417	·5031	4·112	7 3	469·1427	·8781	8·072
8 2	884·8448	·6863	5·947	8 2	541·0208	72·0193	9·487
9 1	945·5311	·8689	7·776	9 1	613·0401	·1599	720·896
24·0 ·90	8006·4	61·0509	9·6	31·0 ·20	685·2	·2999	2·3
1 ·89	067·4509	·2323	611·416	1 ·19	757·4999	·4393	3·696
2 8	128·6832	·4131	3·227	2 8	829·9392	·5781	5·087
3 7	190·0963	·5933	5·032	3 7	902·5173	·7163	6·472
4 6	251·6896	·7729	6·831	4 6	975·2336	·8539	7·851
5 5	313·4625	·9519	8·624	5 5	13048·0875	·9909	9·224
6 4	375·4144	62·1302	620·411	6 4	121·0784	73·1273	730·591
7 3	437·5447	·3081	2·192	7 3	194·2057	·2631	1·952
8 2	499·8528	·4853	3·967	8 2	267·4688	·3983	3·307
9 1	562·3381	·6619	5·736	9 1	340·8671	·5329	4·656
25·0 ·80	625·	·8379	7·5	32·0 ·10	414·4	·6669	6·
1 ·79	687·8379	63·0133	9·256	1 ·09	488·0669	·8003	7·336
2 8	750·8512	·1881	631·007	2 8	561·8672	·9331	8·667
3 7	814·0393	·3623	2·752	3 7	635·8003	74·0653	9·992
4 6	877·4016	·5359	4·491	4 6	709·8656	·1969	741·311
5 5	940·9375	·7089	6·224	5 5	784·0625	·3279	2·624
6 4	9004·6464	·8813	7·951	6 4	858·3904	·4583	3·931
7 3	068·5277	64·0531	9·672	7 3	932·8487	·5881	5·232
8 2	132·5808	·2243	641·387	8 2	14007·4368	·7173	6·527
9 1	196·8061	·3949	3·096	9 1	082·1541	·8459	7·816
26·0 ·70	261·2	·5649	4·8	33·0 ·00	157·	·9739	9·1
1 ·69	325·7649	·7343	6·496	$1^2 \times 12 \cdot 99$	231·9739	75·1013	750·376
2 8	390·4992	·9031	8·187	2 8	307·0752	·2281	1·647
3 7	455·4023	65·0713	9·872	3 7	382·3033	·3543	2·912
4 6	520·4736	·2389	651·551	4 6	457·6576	·4799	4·171
5 5	585·7125	·4059	3·224	5 5	533·1375	·6049	5·424
6 4	651·1184	·5723	4·891	6 4	608·7424	·7293	6·671
7 3	716·6907	·7381	6·552	7 3	684·4717	·8581	7·912
8 2	782·4288	·9033	8·207	8 2	760·3248	·9763	9·147
9 1	848·3321	66·0679	9·856	9 1	836·3011	76·0989	760·376
27·0 ·60	914·4	·2319	661·5	34·0 ·90	912·4	·2209	1·6
1 ·59	980·6319	·3953	3·136	1 ·89	980·6209	·3423	2·816
2 8	10047·0272	·5581	4·767	2 8	15064·9632	·4631	4·027
3 7	113·5853	·7203	6·392	3 7	141·4263	·5833	5·232
4 6	180·3056	·8819	8·011	4 6	218·0096	·7029	6·431
5 5	247·1875	67·0429	9·624	5 5	294·7125	·8219	7·624
6 4	314·2304	·2033	671·231	6 4	371·5344	·9403	8·811
7 3	381·4337	·3631	2·832	7 3	448·4747	77·0581	9·992
8 2	448·7968	·5223	4·427	8 2	525·5328	·1753	771·167
9 1	516·3191	·6809	6·016	9 1	602·7081	·2919	2·336
28·0 ·50	584·	·8389	7·6	35·0 ·80	680·	·4079	3·5
1 ·49	651·8389	·9963	9·176	1 ·79	757·4079	·5233	4·656
2 8	719·8352	68·1531	680·747	2 8	834·9312	·6381	5·807
3 7	787·9883	·3093	2·312	3 7	912·5693	·7523	6·952
4 6	856·2976	·4649	3·871	4 6	990·3216	·8659	8·091
5 5	924·7625	·6199	5·424	5 5	16068·1875	·9789	9·224
6 4	993·3824	·7743	6·971	6 4	146·1664	78·0913	780·351
7 3	11062·1567	·9281	8·512	7 3	224·2577	·2031	1·472
8 2	131·0848	69·0813	690·047	8 2	302·4608	·3143	2·587
9 1	200·1661	·2339	1·576	9 1	380·7751	·4249	3·696
29·0 ·40	269·4	·3859	3·1	36·0 ·70	459·2	·5349	4·8
1 ·39	338·7859	·5373	4·616	1 ·69	537·7349	·6443	5·896
2 8	408·3232	·6881	6·127	2 8	616·3792	·7531	6·987
3 7	478·0113	·8383	7·632	3 7	695·1323	·8613	8·072
4 6	547·8496	·9879	9·131	4 6	773·9936	·9689	9·151
5 5	617·8375	70·1369	700·624	5 5	852·9625	79·0759	790·224
6 4	687·9744	·2853	2·111	6 4	932·0384	·1823	1·291
7 3	758·2597	·4331	3·592	7 3	17011·2207	·2881	2·352
8 2	828·6928	·5803	5·067	8 2	090·5088	·3933	3·407
9 1	899·2731	·7269	6·536	9 1	169·9021	·4979	4·456
30·0 ·30	970·	·8729	8·	37·0 ·60	249·4	·6019	5·5

TABLE D—*continued.*

$T^2 \times g^1$.	Fall in the whole time.	Fall in each tenth of a second.	Velocity acquired.	$T^2 \times g^1$.	Fall in the whole time.	Fall in each tenth of a second.	Velocity acquired.
37·1² × 12·59	17329·0019	79·7053	796·536	44·1² × 11·89	23123·7909	85·4523	854·216
2 8	408·7072	·8081	7·567	2 8	209·2432	·5131	4·827
3 7	488·5153	·9103	8·592	3 7	294·7563	·5733	5·432
4 6	568·4256	80·0119	9·611	4 6	380·3296	·6329	6·031
5 5	648·4735	·1129	800·624	5 5	465·9625	·6919	6·624
6 4	728·5504	·2133	1·631	6 4	551·6544	·7503	7·211
7 3	808·7637	·3131	2·632	7 3	637·4047	·8081	7·792
8 2	889·0768	·4123	3·626	8 2	723·2128	·8653	8·367
9 1	969·4891	·5109	4·616	9 1	809·0781	·9219	8·936
38·0 ·50	18050·	·6089	5·6	45·0 ·80	895·	·9779	9·5
1 ·49	130·6089	·7063	6·576	1 ·79	980·9779	86·0333	860·056
2 8	211·3152	·8031	7·547	2 8	24067·0112	·0881	0·607
3 7	292·1183	·8993	8·512	3 7	153·0993	·1423	1·152
4 6	373·0176	·9949	9·471	4 6	239·2416	·1959	1·691
5 5	454·0125	81·0899	810·424	5 5	325·4375	·2489	2·224
6 4	525·1024	·1843	1·371	6 4	411·6864	·3013	2·751
7 3	616·2867	·2781	2·312	7 3	497·9877	·3531	3·272
8 2	697·5648	·3713	3·247	8 2	584·3408	·4043	3·787
9 1	778·9361	·4639	4·176	9 1	670·7451	·4549	4·296
39·0 ·40	860·4	·5559	5·1	46·0 ·70	757·2	·5049	4·8
1 ·39	941·9559	·6473	6·016	1 ·69	843·7049	·5543	5·296
2 8	19023·6032	·7381	6·927	2 8	930·2592	·6031	5·787
3 7	105·3413	·8283	7·832	3 7	25016·8623	·6513	6·272
4 6	187·1696	·9179	8·731	4 6	103·5136	·6989	6·751
5 5	269·0875	82·0069	9·624	5 5	190·2125	·7459	7·224
6 4	351·0944	·0953	820·511	6 4	276·9584	·7923	7·691
7 3	433·1897	·1831	1·392	7 3	363·7507	·8381	8·152
8 2	515·3728	·2703	2·267	8 2	450·5888	·8833	8·607
9 1	597·6431	·3569	3·136	9 1	537·4721	·9279	9·056
40·0 ·30	680·	·4429	4·	47·0 ·60	624·4	·9719	9·5
1 ·29	762·4429	·5283	4·856	1 ·59	711·3719	87·0153	9·936
2 8	844·9712	·6131	5·707	2 8	798·3872	·0581	870·367
3 7	927·5843	·6973	6·552	3 7	885·4453	·1003	0·792
4 6	20010·2816	·7809	7·391	4 6	972·5456	·1419	1·211
5 5	093·0625	·8639	8·224	5 5	26059·6875	·1829	1·624
6 4	175·9264	·9463	9·051	6 4	146·8704	·2233	2·031
7 3	258·8727	83·0281	9·872	7 3	234·0937	·2631	2·432
8 2	341·9008	·1093	830·687	8 2	321·3568	·3023	2·827
9 1	425·8101	·1899	1·496	9 1	408·6591	·3409	3·216
41·0 ·20	508·2	·2699	2·3	48·0 ·50	496·	·3789	3·6
1 ·19	591·4699	·3493	3·096	1 ·49	583·3789	·4163	3·976
2 8	674·8192	·4281	3·887	2 8	670·7952	·4531	4·347
3 7	758·2473	·5063	4·672	3 7	758·2483	·4893	4·712
4 6	841·7536	·5839	5·451	4 6	845·7376	·5249	5·011
5 5	925·3375	·6609	6·224	5 5	933·2625	·5599	5·424
6 4	21008·9984	·7373	6·991	6 4	27020·8224	·5943	5·771
7 3	092·7357	·8131	7·752	7 3	108·4167	·6281	6·112
8 2	176·5488	·8883	8·507	8 2	196·0448	·6613	6·447
9 1	260·4371	·9629	9·256	9 1	283·7061	·6939	6·776
42·0 ·10	344·4	84·0369	840·	49·0 ·40	371·4	·7259	7·1
1 ·09	428·4369	·1103	0·736	1 ·39	459·1259	·7573	7·416
2 8	512·5472	·1831	1·467	2 8	546·8832	·7881	7·727
3 7	596·7303	·2553	2·192	3 7	634·6713	·8183	8·032
4 6	680·9856	·3629	2·911	4 6	722·4896	·8479	8·331
5 5	765·3125	·3979	3·624	5 5	810·3375	·8769	8·624
6 4	849·7104	·4683	4·331	6 4	898·2144	·9053	8·911
7 3	934·1789	·5381	5·032	7 3	986·1197	·9331	9·192
8 2	22018·7168	·6073	5·727	8 2	28074·0528	·9603	9·467
9 1	103·3241	·6759	6·416	9 1	162·0131	·9869	9·736
43·0 ·00	188·		7·1	50·0 ·30	250·	88·0129	880·
·1² × 11·99	272·7439	·8113	7·776	1 ·29	338·0129	·0383	0·256
2 8	357·5552	·8781	8·447	2 8	426·0512	·0631	0·507
3 7	442·4333	·9443	9·112	3 7	514·1143	·0873	0·752
4 6	527·3776	85·0099	9·771	4 6	602·2016	·1109	0·991
5 5	612·3875	·0749	850·424	5 5	690·3125	·1339	1·224
6 4	697·4624	·1393	1·011	6 4	778·4464	·1563	1·451
7 3	782·6017	·2031	1·712	7 3	866·6027	·1781	1·672
8 2	867·8048	·2663	2·347	8 2	954·7808	·1993	1·887
9 1	953·0711	·3289	2·976	9 1	29042·9801	·2199	2·096
44·0 ·90	23038·4	·3909	3·6	51·0 ·20	131·2	·2399	2·3

TABLE D—*continued.*

$T^2 \times g^1$.	Fall in the whole time.	Fall in each tenth of a second.	Velocity acquired.	$T^2 \times g^1$.	Fall in the whole time.	Fall in each tenth of a second.	Velocity acquired.
$51 \cdot 1^2 \times 11 \cdot 19$	29219·4399	88·2593	882·496	$52 \cdot 8^2 \times 11 \cdot 02$	30721·9968	88·4973	884·927
2 8	307·6992	·2781	2·687	9 1	810·4941	·5059	5·016
3 7	395·9773	·2963	2·872	53·0 ·00	899·	·5139	5·1
4 6	484·2736	·3139	3·051	$1^2 \times 10 \cdot 99$	987·5139	·5213	5·176
5 5	572·5875	·3309	3·224	2 8	31076·0352	·5281	5·247
6 4	660·9184	·3473	3·391	3 7	164·5633	·5343	5·312
7 3	749·2657	·3631	3·552	4 6	253·0976	·5399	5·371
8 2	837·6288	·3783	3·707	5 5	341·6375	·5449	5·424
9 1	926·0071	·2929	3·856	6 4	430·1824	·5493	5·471
52·0 ·10	30014·4	·4069	4·	7 3	518·7317	·5531	5·512
1 ·09	102·8069	·4203	4·136	8 2	607·2848	·5563	5·547
2 8	191·2272	·4331	4·267	9 1	695·8411	·5589	5·576
3 7	279·6603	·4453	4·392	54·0 ·90	784·4	·5609	5·6
4 6	368·1056	·4569	4·511	1 ·89	872·9609	·5623	5·616
5 5	456·5625	·4679	4·624	2 8	961·5232	·5631	5·627
6 4	545·0304	·4783	4·731	3 7	32050·0863	·5633	5·632
7 3	633·5087	·4881	4·832				

Gunnery is the science which enables us to determine the path of a shot through the air; it is the application of the laws of motion to the flight of military projectiles of every description; but at present Gen. Anstruther confines his attention to the flight of spherical bodies projected from smooth-bored cylinders; when this is well understood, it will be time enough to inquire what would result from using elongated shot or rifled barrels.

"If a body be projected (vertically) upwards, with the velocity it acquired in any time by descending freely, it will lose all its (upward) velocity in an equal time, and will (if not acted upon by gravity) ascend just to the same height from whence it fell, and will describe equal spaces in equal times, both in rising and falling, but in an inverse order; and it will have equal velocities at any one and the same point of the line described, both in ascending and descending."—Rutherford's Mathematics, 1841, p. 842.

These words, excepting those in parentheses, are Hutton's; those in parentheses are absolutely required to make the passage truth. For we know, from the second law of motion, that the force of gravity, acting upon this body projected vertically upwards, produces the exact same vertical descent, in each and every second of the entire time of flight, as it had produced in equal time when the same body was suffered to fall freely from a state of rest.

Therefore, in the fall by gravity, as modified by the resistance of the atmosphere, we have at once the inverted reading of the ascent of any ball fired vertically upwards, and we must compound the two simultaneous motions, the ascent and the descent, to obtain the actual motion of the shot.

Most unfortunately, observes Anstruther, we possess no reliable record of a time of flight exceeding 30 seconds; this may justify our inferring the fall in 40 seconds, but no more. The fall in 40 seconds is $(40^2 \times 12 \cdot 3 =)$ 19,680 ft., the velocity acquired by such fall is 824 ft. a second; we are to determine the path of a ball fired vertically upwards with initial velocity 824 ft. a second, which we show in the following tabulated form;—

Seconds of Time.	Simultaneous		Actual Height A – D.	Simultaneous		Seconds of Time.
	Ascent A.	Descent D.		Descent D.	Ascent A.	
20	13960	5720	8240	5720	13960	20
19	13417·8	5198·4	8219·4	6262·2	14481·6	21
18	12855·6	4698	8157·6	6824·4	14982	22
17	12274	4219·4	8054·6	7406	15460·6	23
16	11673·6	3763·2	7910·4	8006·4	15916·8	24
15	11055	3330	7725	8625	16350	25
14	10418·8	2920·4	7498·4	9261·2	16759·6	26
13	9765·6	2535	7230·6	9914·4	17145	27
12	9096	2174·4	6922·6	10584	17505·6	28
11	8410·6	1839·2	6571·4	11269·4	17840·8	29
10	7710	1530	6180	11970	18150	30
9	6994·8	1247·4	5747·4	12685·2	18432·6	31
8	6263·6	992	5273·6	13414·4	18688·1	32
7	5523	764·4	4758·6	14157	18915·6	33
6	4767·6	565·2	4202·4	14912·4	19114·8	34
5	4000	395	3605	15680	19285	35
4	3220·8	254·4	2966·4	16459·2	19425·6	36
3	2430·6	144	2286·6	17249·4	19536	37
2	1630	64·4	1565·6	18050	19615·6	38
1	819·6	16·2	803·4	18860·4	19663·8	39
0	0	0	0	19680	19680	40

If no force were acting upon the projectile, it would, by the first law of motion, move on for ever, in a straight line, with the uniform velocity 824 ft. a second, so that if fired vertically upwards, it would, in 40 seconds, ascend to a height of (824 × 40 =) 32,960 ft. This motion is, however, in fact, modified by the action of two forces—the resistance of the atmosphere and gravity; the former of these reduces the magnitude of the ascent from 32,960 ft. to 19,680 ft. in 40 seconds' time; while the other force, gravity, in the same 40 seconds of time, is counteracting this reduced ascent, so that it brings the ball back to the spot from whence it rose, after an actual ascent of 8240 ft., which is equal to the initial velocity multiplied by one-fourth of the time of flight. Fired vertically upwards, the ball will return to the spot from whence it rose, having no range at all; but at any elevation less than 90° there will be a range which is very easily found, the ascent and the descent being both known, the difference between their squares is the square of the range.

We give Anstruther's Table, E, showing forty ranges at varying elevations for the velocity 824 ft. a second; this will enable us at once to draw the trajectory for any angle of elevation whatever. In any right-angled triangle, lay off upon the hypothenuse as many of the forty-one ascents given in our Table as the case may require, and let fall perpendiculars to show by their length the simultaneous descent—a line joining the lower ends of all these is the trajectory.

TABLE E.—INITIAL VELOCITY = 824 FEET A SECOND.

Time.	Ascent.	Descent.	Range.	Yards.	Log Sin.	Elevation.		
						°	′	″
1	819·6	16·2	819·44	273·15	8·2959131	1	08	57
2	1630	64·4	1628·72	542·91	8·5966982	2	16	
3	2430·6	144	2426·33	808·77	8·7726489	3	23	49
4	3220·8	254·4	3210·74	1070·25	8·8975533	4	31	49·2
5	4000	395	3980·9	1327	8·9945371	5	40	
6	4767·6	565·2	4733·98	1570	9·0739024	6	48	
7	5523	764·4	5469·84	1823·28	9·1411557	7	57	
8	6265·6	992	6186·15	2062·05	9·1995490	9	06	34·8
9	6994·8	1247·4	6882·67	2294·22	9·2512304	10	16	
10	7710	1530	7556·67	2518·56	9·2976371	11	26	45
11	8410·6	1839·2	8206·64	2735·55	9·3398020	12	37	52·6
12	9096	2174·4	8832·28	2944·09	9·3784889	13	49	49·7
13	9765·6	2535	9430·8	3143·61	9·4142791	15	2	43·5
14	10418·8	2920·4	10001·13	3333·71	9·4476246	16	16	41·4
15	11055	3330	10541·54	3512·85	9·4788855	17	31	51
16	11673·6	3763·2	11050·4	3686·8	9·5083525	18	48	22·4
17	12274	4219·4	11525·95	3841 95	9·5363675	20	06	41·5
18	12855·6	4698	11966·42	3988·81	9·5628206	21	26	05·6
19	13417·8	5198·4	12369·88	4123 29	9·5881916	22	47	40·5
20	13960	5720	12734·33	4244·78	9 6125106	24	11	19
21	14481·6	6262·2	13057·36	4352·45	9·6359104	25	37	17·5
22	14982	6824·4	13337·46	4445·82	9·6584947	27	05	51·1
23	15460·6	7406	13570·98	4523·66	9·6803573	28	37	18
24	15916·8	8006·4	13756·52	4585·51	9·7015844	30	12	
25	16350	8625	13890	4630	9·7222413	31	50	17·6
26	16759·6	9261·2	13968·33	4656·11	9·7424166	33	32	45·8
27	17145	9914·4	13987·7	4662·59	9·7621289	35	19	44·9
28	17505·6	10584	13943·63	4644·54	9·7814728	37	12	02
29	17840·8	11269·4	13830·93	4610·31	9·8004865	39	10	23
30	18150	11970	13643·37	4547 79	9·8192176	41	15	43
31	18432·6	12685·2	13373·35	4457·78	9·8377107	43	29	14·3
31·57	18599·23	13150·21	13150·21	4383·4	9·8494377	44	59	37·55
32	18688	13414·4	13011·34	4337·11	9·8560087	45	52	
33	18915·6	14157	12545·09	4181·7	9·8741511	48	27	16·4
34	19114·8	14912·4	11958·09	3986·03	9·8918864	51	13	34·9
35	19285	15680	11227·15	3742·72	9·9101265	54	23	48·2
36	19425·6	16459·2	10317·39	3439·13	9·9280243	57	55	06·9
37	19536	17249·4	9171·33	3057·11	9·9459384	62	—	03·1
38	19615·6	18050	7679·15	2559·72	9·9638778	66	57	14·3
39	19663·8	18860·4	5562·51	1887·5	9·9818834	73	33	55·3
40	19680	19680	0·0	0·0	10·0000000	90		

The following example illustrates the nature and use of Table D;—Suppose that at elevation 4° 31′ 49·2″ (log. sin. 8·8975533) we find that the range was 3210·74 ft., then the vertical descent must be 254·4 ft., which indicates a time of flight of 4 seconds exactly. The oblique ascent of this ball we find to be 3220·8 ft., this we divide by the time, 4 seconds, the quotient, 805·2 ft. a second, is the mean velocity of the ascent. A reference to our Table shows that a velocity of 805·6 ft. is generated by gravity in 38 seconds of time; this we accept as sufficiently near. Evidently, the mean velocity of the oblique ascent will be almost the exact measure of the velocity with which the ball will be moving at the expiration of half the time of flight, that is to say, two seconds of time after quitting the muzzle, therefore (38 + 2 =) 40 seconds is the time in which gravity would generate the velocity which at elevation 4° 31′ 49·2″ ranged 3210·74 ft.

Our Table gives the graduation of this oblique ascent in the forty lines preceding 4 seconds,

but this minuteness is not required; the following Table shows the trajectory for 4 seconds, calculated to half seconds of time—velocity 824 ft. a second.

Time.	Ascent.		Horizontal (Abscisses).	Vertical Descent.	Ordinates.
	Oblique.	Vertical.			
0·5	410·9125	32·456576	409·62868	4·0625	28·394076
1	819·6	64·737407	817·03931	16·2	48·537407
1·5	1225·7875	96·836569	1222·15713	36·3375	60·499069
2	1630	128·748148	1624·90737	64·4	64·346148
2·5	2031·5625	160·466210	2025·21526	100·3125	60·153710
3	2430·6	191·984831	2423·00604	144	47·984831
3·5	2827·0375	223·298087	2818·20494	195·3875	27·910587
4	3220·8	254·4	3210·7372	254·4	0·0

Table E shows that at elevation 15°, the range for initial velocity, 824 ft. a second, is 3143·6 yds., which is not very far short of the ranges obtained by the 32-pounder guns at the well-known practice at Deal in 1839. We deduce the following, among other, conclusions from our Table;—First, the angle of ascent and the angle of descent are almost exactly the same when a spherical ball is fired with the usual initial velocity at service elevation. Secondly, the height to which any ball, fired vertically upwards with velocity V, would ascend in any time T, is equal to $\frac{1}{4}$ T × V exactly. Third, the course of every round projectile is nearly level from the end of the first quarter of the time of flight to the end of the third quarter of it; and, lastly, that we can in all cases of real practice determine every point of any real importance from the facts patent to all.

To show this by an example, we must employ a French record of experiments; all English records give us the angle of inclination, to use Lefroy's phrase; what we want is the angle of departure, and the French give it. At Gavre, in 1830, some very carefully-conducted experiments were recorded; we take the largest gun, the "canon de 30 long"; the following are the results, in feet, with our own calculation of the time and the velocity; the charge is 4ᵏ·9 or 0·324 of the weight of the shot.

Real Elevation.			Feet Range.	Oblique Ascent.	Vertical Ascent.	Dip of the Ground.	Fall by Gravity.	Time of Flight.	Mean Velocity.
°	′	″							
0	11	13	1322·02	1322·3	4·314	13·1029	17·417	1·037	1275
1	33	22	2792·05	2793·1	75·849	17·3	93·15	2·4084	1159·7
5	4	28	5626·75	5648·8	499·644	19·886	519·53	5·75	980·66
10	27	37	8517·23	8661·2	1572·467	11·1077	1585·575	10·18	850·8

The French artillerists, reasoning on Hutton's principles, find that the initial velocity was 425 mètres, or 1394·38 ft. a second. Obviously it cannot be more than 1280 or 1290, the mean velocity in a time of only 1·037 second being 1275 ft. a second. The oblique ascent is as follows;—

Oblique Ascent.	Time.	Current Velocity.
1322·3	1·037	1275
1470·8	1·3714	1072·5
2855·7	3·3416	854·5
3012·4	4·43	850·8
8661·2	10·18	

Gen. Anstruther gives a Table, Table F, showing the fall by gravity in five seconds of time, calculated to the hundredth parts of seconds of time; this will enable us to find the time of flight for all ordinary musketry or field artillery. The range multiplied by the tangent of the elevation is the vertical ascent and descent; its length indicates the time.

TABLE F.

Time.	Fall.	Time.	Fall.	Time.	Fall.	Time.	Fall.	Time.	Fall.
0·01	0·0016	0·09	0·1320	0·17	0·4706	0·25	1·0172	0·33	1·7715
2	·0065	0·1	·1629	8	·5275	6	·1001	4	·8803
3	·0147	1	·1971	9	·5877	7	·1863	5	·9925
4	·0261	2	·2345	0·2	·6512	8	·2757	6	2·1078
5	·0407	3	·2753	1	·7179	9	·3684	7	·2264
6	·0587	4	·3192	2	·7879	0·3	·4643	8	·3482
7	·0798	5	·3664	3	·8619	1	·5635	9	·4733
8	·1042	6	·4169	4	·9375	2	·6658	0·4	·6016

TABLE F—*continued.*

Time.	Fall.	Time.	Fall.	Time.	Fall.	Time.	Fall.	Time.	Fall.
0·41	2·7331	1·11	19·9465	1·81	52·8075	2·51	101·1103	3·21	164·6492
2	·8679	2	20·3062	2	53·3893	2	1·9112	2	5·6663
3	3·0059	3	·6692	3	·9742	3	2·7152	3	6·6864
4	·1472	4	21·0353	4	54·5623	4	3·5224	4	7·7097
5	·2916	5	·4047	5	55·1536	5	4·3326	5	8·7359
6	·4393	6	·7772	6	·7480	6	5·1460	6	9·7653
7	·5903	7	22·1529	7	56·3455	7	5·9624	7	170·7977
8	·7445	8	·5318	8	·9463	8	6·7820	8	1·8332
9	·9019	9	·9139	9	57·5501	9	7·6046	9	2·8717
0·5	4·0625	1·2	23·2992	1·9	58·1571	2·6	8·4304	3·3	3·9133
1	·2264	1	·6877	1	·7672	1	9·2593	1	4·9580
2	·3935	2	24·0793	2	59·3805	2	110·0912	2	6·0057
3	·5638	3	·4742	3	·9970	3	0·9263	3	7·0565
4	·7373	4	·8722	4	60·6165	4	1·7645	4	8·1103
5	·9141	5	25·2734	5	61·2393	5	2·6058	5	9·1672
6	5·0941	6	·6778	6	·8651	6	3·4502	6	180·2272
7	·2774	7	26·0854	7	62·4941	7	4·2977	7	1·2902
8	·4638	8	·4962	8	63·1263	8	5·1482	8	2·3563
9	·6535	9	·9101	9	·7616	9	6·0019	9	3·4254
0·6	·8464	1·3	27·3273	2·	64·4	2·7	6·8587	3·4	4·4976
1	6·0425	1	·7476	1	65·0416	1	7·7186	1	5·5728
2	·2419	2	28·1711	2	·6863	2	8·5816	2	6·6512
3	·4445	3	·5978	3	66·3341	3	9·4476	3	7·7325
4	·6503	4	29·0277	4	·9851	4	120·3168	4	8·8169
5	·8593	5	·4607	5	67·6392	5	1·1891	5	9·9044
6	7·0715	6	·8969	6	68·2965	6	2·0644	6	190·9949
7	·2870	7	30·3363	7	·9569	7	2·9429	7	2·0885
8	·5057	8	·7789	8	69·6204	8	3·8244	8	3·1851
9	·7276	9	31·2247	9	70·2871	9	4·7091	9	4·2848
0·7	·9527	1·4	·6736	2·1	·9569	2·8	5·5968	3·5	5·3875
1	8·1810	1	32·1257	1	71·6298	1	6·4876	1	6·4933
2	·4126	2	·5810	2	72·3059	2	7·3815	2	7·6021
3	·6474	3	33·0394	3	·9851	3	8·2786	3	8·7140
4	·8854	4	·5011	4	73·6674	4	9·1786	4	9·8289
5	9·1866	5	·9659	5	74·2529	5	130·0818	5	200·9469
6	·3710	6	34·4339	6	75·0415	6	0·9881	6	2·0679
7	·6186	7	·9050	7	·7332	7	1·8975	7	3·1919
8	·8695	8	35·3793	8	76·4281	8	2·8099	8	4·3190
9	10·1235	9	·8568	9	77·1261	9	3·7251	9	5·4492
0·8	·3808	1·5	36·3375	2·2	·8272	2·9	4·6441	3·6	6·5824
1	·6413	1	·8213	1	78·5314	1	5·5658	1	7·7186
2	·9050	2	37·3083	2	79·2388	2	6·4906	2	8·8579
3	11·1719	3	·7985	3	·9493	3	7·4185	3	210·0003
4	·4420	4	38·2919	4	80·6629	4	8·3495	4	1·1456
5	·7153	5	·7884	5	81·3797	5	9·2825	5	2·2940
6	·9919	6	39·2880	6	82·0996	6	140·2206	6	3·4455
7	12·2716	7	·7909	7	·8226	7	1·1609	7	4·6000
8	·5546	8	40·2969	8	83·5487	8	2·1042	8	5·7575
9	·8407	9	·8061	9	84·2779	9	3·0505	9	6·9181
0·9	13·1301	1·6	41·3184	2·3	85·0103	3·	4·	3·7	8·0817
1	·4227	1	·8339	1	·7458	1	4·9525	1	9·2483
2	·7185	2	42·3526	2	86·4844	2	5·9082	2	220·4180
3	14·0174	3	·8744	3	87·2261	3	6·8669	3	1·5908
4	·3196	4	43·3994	4	·9710	4	7·8286	4	2·7665
5	·6250	5	·9275	5	88·7190	5	8·7935	5	3·9453
6	·9336	6	44·4588	6	89·4701	6	9·7614	6	5·1271
7	15·2454	7	·9933	7	90·2243	7	150·7234	7	6·3120
8	·5604	8	45·5310	8	·9816	8	1·7065	8	7·4999
9	·8786	9	46·0717	9	91·7420	9	2·6837	9	8·6908
1·	16·2	1·7	·6157	2·4	92·5056	3·1	3·6639	3·8	9·8848
1	·5246	1	47·1628	1	93·2723	1	4·6472	1	231·0818
2	·8524	2	·7131	2	94·0421	2	5·6336	2	2·2818
3	17·1834	3	48·2665	3	·8150	3	6·6230	3	3·4849
4	·5176	4	·8231	4	95·5910	4	7·6156	4	4·6910
5	·8550	5	49·3828	5	96·3701	5	8·6112	5	5·9001
6	18·1956	6	·9457	6	97·1524	6	9·6098	6	7·1122
7	·5394	7	50·5117	7	·9377	7	160·6116	7	8·3274
8	·8863	8	51·0809	8	98·7262	8	1·6161	8	9·5456
9	19·2365	9	·6533	9	99·5178	9	2·6243	9	240·7668
1·1	·5899	1·8	52·2288	2·5	100·3125	3·2	3·6352	3·9	1·9911

TABLE F—*continued.*

Time.	Fall.	Time.	Fall.	Time.	Fall.	Time.	Fall.	Time.	Fall.
3·91	243·2184	4·13	270·9830	4·35	300·2055	4·57	330·8795	4·79	362·9986
2	4·4487	4	2·2797	6	1·5683	8	2·3081	4·8	4·4928
3	5·6820	5	3·5794	7	2·9341	9	3·7398	1	5·9900
4	6·9184	6	4·8822	8	4·3030	4·6	5·1744	2	7·4901
5	8·1578	7	6·1879	9	5·6748	1	6·6120	3	8·9932
6	9·4002	8	7·4967	4·4	7·0496	2	8·0526	4	370·4993
7	250·6456	9	8·8084	1	8·4274	3	9·4962	5	2·0083
8	1·8940	4·2	280·1232	2	9·8082	4	340·9427	6	3·5204
9	3·1455	1	1·4410	3	311·1920	5	2·3923	7	5·0353
4·	4·4	2	2·7618	4	2·5788	6	3·8448	8	6·5533
1	5·6575	3	4·0856	5	3·9686	7	5·3003	9	8·0742
2	6·9180	4	5·4124	6	5·3614	8	6·7588	4·9	9·5981
3	8·1816	5	6·7422	7	6·7572	9	8·2203	1	381·1250
4	9·4482	6	8·0750	8	8·1560	4·7	9·6847	2	2·6548
5	260·7177	7	9·4108	9	9·5577	1	351·1521	3	4·1876
6	1·9903	8	290·7496	4·5	320·9625	2	2·6225	4	5·7233
7	3·2660	9	2·0915	1	2·3702	3	4·0959	5	7·2620
8	4·5446	4·3	3·4363	2	3·7810	4	5·5722	6	8·8037
9	5·8262	1	4·7841	3	5·1947	5	7·0516	7	390·3483
4·1	7·1109	2	6·1350	4	6·6114	6	8·5339	8	1·8959
1	8·3986	3	7·4888	5	8·0311	7	360·0191	9	3·4465
2	9·6893	4	8·8456	6	9·4538	8	1·5074	5·	5·

The quotation, p. 1732, showed one theory of Hutton's, which, with slight additions, is true; we shall now show another, which is totally wrong in every possible way.

Extract from Straith's Memoir of Artillery, pp. 81, 82.—"Dr. Gregory, in his lectures upon gunnery, observes on the difference between the times employed by a ball in ascending and descending vertically through the same space.

"If a 24-lb. iron ball were projected vertically upwards, with a velocity of 2000 ft. a second, it would ascend to the height of 6424 ft. before its upward motion was extinguished, and it would pass over that space in less than $9\frac{1}{2}$ seconds. (This is computed in Hutton's Mathematics, vol. iii.)

"It might, on a cursory view of the subject, be supposed that the circumstances of the descent would be analogous to those of the ascent, but in an inverted order; and so they would, in a non-resisting medium, but in the air the case is widely different.

"After the ball had descended 2700 ft., the resistance of the air would be equal to the weight of the ball, there would remain no further cause of acceleration, and the ball would descend uniformly with its *terminal* velocity (that is, the greatest velocity which a heavy body can acquire when falling in the air), which does not exceed 419 ft. a second.

"It would require, therefore, $\frac{6425 - 2700}{419}$ or 6 seconds, to descend the remaining 3724 ft., in addition to the time, about 10 seconds, which had been occupied in descending through the first 2700 ft.; so that, in this instance, the time of descent would be about double that of ascent. In all cases where the projectile velocity exceeds 300 or 400 ft., the time of descent will exceed that of ascent; and their difference is greater the more the initial velocity exceeds that limit."

Here we find, observes the General, an Addiscombe professor quoting from two Woolwich professors. We are therefore sure that, at one period of his life, each artillery officer in the service believed that the descent and ascent of a ball fired upwards were successive motions, not simultaneous.

But such belief could not last long; the first time the young officer attempted to draw the trajectory of any ball from given range and elevation, we know that he did assume the abscisses; he then multiplied each abscissa by the tangent of the elevation for the vertical ascent, from which he subtracted the vertical descent, or fall by gravity, and assigned the difference between the vertical ascent and vertical descent as the ordinates of the curve. He could not have drawn a trajectory at all on any other supposition.

In the Treatise on Artillery, by Colonel Boxer, we find, pp. 144, 145, sixteen descents subtracted from sixteen ascents, the sixteen differences being given in p. 146 as the ordinates of the curve. The trajectory which he gives would leave nothing to be desired, if he would adapt his mode of calculating the flight of a projectile to some actual fact, some range and elevation recorded as having actually been observed. Perhaps the following may serve as an example;—

At Shoeburyness, on the 24th of November, 1854, the 10-in. iron howitzer of 125 cwt. gave a range of 4440 yds., or 13,320 ft. at 42° elevation. Here we say 13,320 × secant 42° = 17923·827564 ft. the oblique ascent, 13,320 × tangent 42° = 11993·38128 ft. the vertical ascent, to which latter we add 15 ft., the height of the piece above the plane, and we have 12008·38128 ft. for the vertical descent, or fall by gravity. From this we determine the time of flight; we find it to be 30·0541 seconds for $30{\cdot}0541^2 \times 13{\cdot}29459 = 12008{\cdot}32415$ ft.

We divide the oblique ascent, 17923·827564 ft. by the time of flight, 30·0541 seconds, the

quotient is 596·38, the mean velocity of the oblique ascent. We look at our printed Table and find that a ball, falling freely from a state of rest, would acquire a velocity of 596,712 ft. in 23·3 seconds of time, therefore (23·3 + 15 =) 38·3 seconds is the approximation to the greater extreme of the series, or progression, which must form the graduation of the oblique ascent. But 38·3 seconds is not sufficient; we try 39 seconds, 39·5 seconds, and 39·55 seconds, which is sufficiently accurate.

For the fall in 39·55 seconds of time is

	$39·55^2$	× 12·345	=	19310·0798625 ft.
and in 9·496 seconds	$9·496^2$	× 15·3504	=	1384·2072152
the differences	30·054 seconds of time and			17925·8726473 ft.,

show an excess of only 2·045 ft. over the oblique ascent. The velocity which the ball acquires by falling in 39·55 seconds, we find thus;—

	$39·55^2$	× 12·345	=	19310·0798625 ft.
and in 39·54 seconds	$39·54^2$	× 12·346	=	19301·8796136
the differences	0·01 second of time and			8·2002482 ft.,

show a velocity of 820 ft. per second.

The observed time of flight was 30 seconds; this is so nearly that which we assign, that we do not hesitate to say that it proves the truth of our theory, and utterly confutes that of Hutton.

We will now conclude this by showing the true initial velocity of an actual ascent of 6424 ft. at elevation 90°; it is very easily found by inverting the reasoning, p. 1732; we there found that an actual ascent of 8240 ft. resulted from velocity 824 ft. a second, and 40 seconds' time of flight, $\frac{V T}{4}$ = 8240 ft., we now say $\frac{V T}{4}$ = 6424 ft.; therefore V T = 25686 ft.

We try 33·8 seconds, 33·8 × 759·147 = 25659·1686, too little;
„ 33·9 „ 33·9 × 760·376 = 25776·7464, too much;
„ 33·83 „ 32·83 × 759·45581 = 25692·3900523 ft.,

with which we are satisfied. It cannot be necessary to repeat for 33·83 seconds the process shown in p. 1732 for 40 seconds, the initial velocity which Hutton gives as 2000 ft. a second should be 759·456 ft. a second.

General Anstruther invites the mathematicians of Cambridge, or of any other place, to confirm or negative the theory which assigns to a vertical flight of 10 seconds' duration an initial velocity of only 161 ft. a second, with an actual ascent of only 402·5 ft. *Vide* Cape's Mathematics, vol. ii., p. 216.

We say that the velocity of 10 seconds' time of flight is 296 ft. a second; one-fourth of this is 74 ft.. then 74 × 10 = 740 ft. the actual ascent. We give the following Table showing the motion of a ball fired vertically upwards with initial velocity 296 ft. a second.

Time. Seconds.	Simultaneous Ascent.	Simultaneous Descent.	Actual Height.	Simultaneous Descent.	Simultaneous Ascent.	Time. Seconds.
5	1135	395	740	395	1135	5
4	964·8	254·4	710·4	565·2	1275·6	6
3	765·6	144	621·6	764·4	1386	7
2	538	64·4	473·6	992	1465·6	8
1	282· 6	16·2	266·4	1247·4	1513·8	9
0	0	0	0	1530	1530	10

We say that at 45° elevation the range for 10 seconds' time of flight is 1530 ft., and that we can determine the initial velocity which would give that range by a very simple process; thus, we draw a square, each side representing 1530 ft., and we draw a diagonal measuring $1530\sqrt{2}$ ft., or 2163·75 ft. This diagonal will represent the oblique ascent in the time of flight, 10 seconds; we see at a glance that the mean velocity of the oblique ascent, 2163·75 ft. in 10 seconds, is 216·375 ft. a second, and our printed Table shows us that a fall of 7·1 seconds' duration would give a velocity of 216·336, almost exactly the mean velocity of the oblique ascent.

The time when the ball is moving with the mean velocity is sure to be very nearly the middle period of the time of flight, so that 5 seconds after, and 5 seconds before, 7·1 seconds, that is 12·1 and 2·1 seconds, will be the 10 seconds in our Table which give the graduations of the oblique ascent. More correctly it would be 12·2 seconds and 2·2 seconds, still more correctly 12·19 and 2·19 seconds. For the fall in 12·19 seconds of time is

	$12·19^2$	× 15·081	= 2240·9777841 ft.
and in 2·19 seconds	$2·19^2$	× 16·081	= 77·1260841
			2163·8517 ft., only 0·1 ft. too much.

The following are the abscisses and ordinates:—

Time.	Abscisses.	Differences. 1.	2.	3.	Ordinates.
1	240·467338	240·467338			240·267338
2	462·630509	222·203171	18·304167		398·231009
3	666·065249	203·434740	18·728431		522·065249
4	850·347294	184·282045	19·152695		595·947294
5	1015·052380	164·705086	19·576959		620·052380
6	1159·756243	144·703863	20·001223	0·424264	594·556243
7	1284·034619	124·278376	20·425487		519·634619
8	1387·463244	103·428625	20·849751		395·463244
9	1469·617850	82·154610	21·274015		222·217850
10	1530·074181	60·456331	21·698279		0·074181

We have given these abscisses and ordinates because that is the usual method of defining a curve; it is, however, a very bad method, not one figure being of any use at any other elevation. We give now the simultaneous ascent and descent for all elevations whatever.

Time.	Ascent.	Differences. 1.	2.	3.	Descent.
1	340·07217	340·07217			16·2
2	654·25834	314·18617	25·886		64·4
3	941·95851	287·70017	26·486		144
4	1202·57268	260·61417	27·086		254·4
5	1435·50085	232·92817	27·686		395
6	1640·14302	204·64217	28·286		565·2
7	1815·89919	175·75617	28·886	0·6	764·4
8	1962·16936	146·27017	29·486		992
9	2078·35353	116·18417	29·086		1247·6
10	2163·85170	85·49817	30·686		1530
11	2218·06387	54·21217	31·286		1839·2
12	2240·39004	22·32617	31·886		2174·4
12·19	2240·9777841				2240·9777841

The velocity acquired by falling in 12·19 seconds, we find thus;—

The fall in	12·2	seconds is	2244·5072 ft.
and in	12·19	„	2240·9777841
the differences being	0·01	second and	3·5124159 ft.,

show a velocity of 351·94, say 352 ft. a second.

That the range at 45° elevation is the exact measure of the fall by gravity in the time of flight is an acknowledged fact, yet we find the British gunner assigning different ranges to the same elevation and time of flight, 45° and 10 seconds.

We read that the range of the 10-in. land mortar was 534 yds. in 10 seconds, at 45° elevation; that of the 8-in., 560 yds.; so that the fall by gravity in 10 seconds was 1602 ft., or $t^2 \times 16{\cdot}02$, as shown by the 10-in., or else 1680 ft., or $t^2 \times 16{\cdot}8$, as shown by the 8-in. We say it is 1530 ft., or $t^2 \times 15{\cdot}3$, as registered in the General's Table.

The President of the special committee on breech-loading rifles informed Anstruther that they do not consider the angles given in p. 23 of their report to be sufficiently accurate to furnish data for calculation, and that the initial velocity was really very much greater than he gave it.

It is to be regretted that the committee did not measure the true angle of departure in the manner adopted by the French at Gavre, in the years 1830 to 1840, who placed a screen 30 ft. in front of the muzzle, and measured the actual angle at which the shot did leave the gun.

The following were the oblique ascents and vertical descents of the largest gun, the "canon de 30 long," with the smallest charge, $2^k{\cdot}45$.

Range 323 mètres, or 1059·73 ft., had

Oblique ascent	1059·8 ft.
Vertical descent	14·396 ft.
Therefore, a time of flight	0·94 second
And a mean velocity of ascent $\left(\frac{1059{\cdot}8}{0{\cdot}94} =\right)$ ..	1127·44 ft. a second.

Hence we know that at the expiration of 0·47 second, the velocity of this ball was 1127·44 ft. a second.

Again, the range being 712 mètres, or 2336 ft.,

The oblique ascent was	2337 ft.
The vertical descent	83·09 ft.
The time of flight	2·27 seconds
And a mean velocity of $\left(\frac{2337}{2\cdot27} =\right)$	1029·5 ft. a second,

which is the velocity with which it was moving at 1·135 second after quitting the muzzle.

Comparing these two, at	0·47	second, the velocity was		1127·44 ft.
	1·135	„ „ „		1029·5
the differences are	0·665	„ and		97·94 ft.,

showing a rate of reduction of about 147 ft. in a second.

Supposing that the ball lost half of this velocity in the 0·47 second of its first flight, we add 74 ft. a second to the 1127·44 ft. of the first range, and give (1127·44 + 74 =) 1201 ft., say 1200 as the initial velocity of the ball. The French artillerists give it as 363 mètres, or 1190·966 ft., almost exactly what Anstruther's simple and easy calculation makes it.

Example, to show how Table E is applied.—On the supposition that the largest projectile will be most easily observed, and that the longest gun will give the most accurate results, we have selected our data from page 390 of the Ordnance Manual of the American Artillery. The bore of the piece is 15 in. in diameter, 165 in. in length.

The 15-in. columbiad, with 40 lbs. of powder, gave the following ranges, namely, at

9°	elevation,	2236	yds., or	6708	ft. in	8·87	seconds' time.
10°	„	2425	„	7275	„	10	„
12°	„	2831	„	8493	„	12·07	„
15°	„	3078	„	9234	„	13·72	„
20°	„	3838	„	11514	„	17·82	„
25°	„	4528	„	13584	„	22·03	„
28°	„	4821	„	14463	„	24·18	„
30°	„	5018	„	15054	„	26·71	„

The angles here named are evidently the "angles of inclination," as shown by a spirit-level quadrant, and not the "angles of departure," those which the path of the shot makes with the horizon, as it clears the mouth of the piece; but the recorded time of flight enables us to find the vertical ascent, from which we can determine the angle of departure.

The vertical descent is the fall by gravity: our Table shows us that the fall in

8·87	seconds is	$8\cdot87^2 \times 15\cdot413 = 1212\cdot6470597$ ft.
10	„	$10^2 \times 15\cdot3 = 1530$
12·07	„	$12\cdot07^2 \times 15\cdot093 = 2198\cdot8221857$
13·72	„	$13\cdot72^2 \times 14\cdot928 = 2810\cdot0228352$
17·82	„	$17\cdot82^2 \times 14\cdot518 = 4610\cdot2257432$
22·03	„	$22\cdot03^2 \times 14\cdot297 = 6841\cdot5687273$
24·18	„	$24\cdot18^2 \times 13\cdot882 = 8116\cdot4222568$
26·71	„	$26\cdot71^2 \times 13\cdot629 = 9723\cdot2570589$

There must have been a vertical ascent to enable the ball to have this vertical descent, we deduce the following eight triangles;—

Triangle.	Horizontal.	Vertical.	Oblique.	Triangle.	Horizontal.	Vertical.	Oblique.
I.	6708	1212·647	6818·7	V.	11514	4610·226	12402·6
II.	7275	1530	7434·15	VI.	13584	6841·569	15209·6
III.	8493	2198·822	8773	VII.	14463	8116·422	16584·7
IV.	9234	2810·023	9652·1	VIII.	15054	9723·257	17921·067

The last of these triangles we must examine carefully.

Knowing the three sides, we find the acute angles to be

32° 51′ 29·1″, log. sin. 9·7344479
and 57° 8′ 30·9″, „ 9·9242881;

we draw a triangle with these angles, and upon the hypothenuse we mark off all the eight oblique ascents given p. 1732, then from the points so found let fall successively the eight vertical

3346.

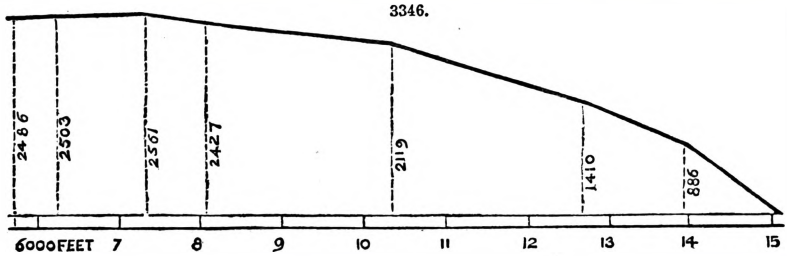

descents, join the lower ends of all the verticals; the curve so found is the trajectory required, as in Fig. 3346.

The calculated measurements of this curve are as follows;—

Abscisses.	Simultaneous		Ordinates.	Abscisses.	Simultaneous		Ordinates.
	Ascent.	Descent.			Ascent.	Descent.	
5726·145	3698·467	1212·647	2485·82	10416	6729·151	4610·226	2118·925
6224·812	4033·47	1530	2503·47	12777·322	8252·117	6841·569	1410·548
7369·47	4759·876	2193·842	2561·054	13934·637	9002·261	8116·422	885·839
8107·927	5236·841	2810·023	2426·818	15054	9723·257	9723·257	0·0

We must now determine the initial velocity of this ball, which we easily do, from the fact that it did ascend obliquely to a distance of 17921·067 ft. in 26·71 seconds, with a simultaneous vertical descent of 9723·257 ft. If this ball had been fired vertically upwards, then at 8197·81 ft. above the plane would have been its place at the expiration of 26·71 seconds of time.

We know that if a ball be projected upwards vertically, with the velocity which it acquired in any time by descending freely, it would, *if not acted upon by gravity*, lose all velocity in an equal time, and would, *if not acted upon by gravity*, ascend just to the same height from which it fell, and, in so doing, would describe equal spaces in equal times, in rising and falling, but in an inverse order; and it would have equal velocities at any one and the same point of the line described both in ascending and descending.

Our last paragraph, except the words in italics, is taken from Hutton, as quoted by Gregory and Rutherford. The words in italics added by the General are necessary.

We have therefore only to turn to our Table showing the fall of gravity as modified by the resistance of the atmosphere, to find the 267 lines which will give the graduation of the oblique ascent of this ball, and we have a very simple method of finding the place by finding the mean velocity; the space 17,921 ft. divided by the time 26·7 seconds, gives 671·2 ft. a second as the mean velocity of the ascent, which we see must be nearly the velocity with which the ball will be moving at the middle period of the time of flight, that is to say, at 13·35 seconds from clearing the mouth of the piece. Now velocity 671·2 is acquired by a fall of 27·6 seconds, we add 27·6 and 13·35, the sum 40·95 seconds is an approximation to the true time.

But 42·1 seconds is nearer the truth, as we shall show.

The fall in	42·1 seconds is	$42·1^2 \times 12·09 =$	21428·4369 ft.
and in	15·4 „	$15·4^2 \times 14·76 =$	3500·4816
the differences being	26·7 seconds of time and		17927·9553 are only 7 ft. too much.

We shall, however, be satisfied with 42 seconds as near enough.

The fall in	42 seconds is	$42^2 \times 12·1 =$	21344·4
and in	15·3 „	$15·3^2 \times 14·77 =$	3457·5093
			17886·8907 ft.,
		which is too short by	34
		as it ought to be	17921·

Our Table shows that the velocity acquired by a fall of 42 seconds is 840 ft. a second; this is therefore the initial velocity, which at the elevation (true) 32° 51′ 29·1″ gave a range of 5018 yds.

Now let us suppose that the ball is fired vertically upwards with initial velocity 840 ft. a second, it is very evident that, if no force were acting upon the projectile, it would, by the first law of motion, move on for ever in the line of direction given to it, and would ascend to a height of (42 × 840 =) T V = 35280 ft. in 42 seconds; the resistance of the atmosphere reduces this to 21344·4 ft.; and the force of gravity causes a simultaneous descent of 21344·4 ft., so that the ball returns to the ground, having in exactly half the time of flight attained a vertical height of exactly one-fourth part of T V, that is to say, 8820 ft., the fourth part of 35,280 ft.

Why the actual ascent, at 90° elevation, should always be exactly the fourth part of T V, we need not inquire; such is the fact. We shall show another example of it. A ball fired vertically with initial velocity 636·224 ft. per second, will return to the ground in 25·5 seconds, having ascended in 12·75 seconds to a height equal to 25·5, multiplied by one-fourth part of 636·224, which is 159·056 ft., so that (25·5 × 159·056 =) 4055·928 ft. is the real height attained. This is a correction of the height assigned to this ball in p. 381 of vol. ix. of the Journal of the Royal United Service Institution, where the height is given as 4055·93275 ft., which is 0·00675 ft. too much; the velocity there assigned to this time of flight is 636·1385 ft., it should be 636·224. The cause of the error is to be found in page 375, where the velocity acquired by a fall of 25·5 seconds is found by taking the difference between 25·5 and 25·49 seconds; it should have been done by taking the difference between 25·5 and 25·49999999999999 seconds. The true ascent is one-fourth of T V in all possible cases, but this was not known in A.D. 1865.

Hutton supposed that an initial velocity of 2000 ft., at 90° elevation, would culminate in "less than 9½ seconds" at a height of 6424 ft., returning to the ground in "about" 16 seconds. He did not perceive that the ascent and the descent were simultaneous, and in this error he was followed by Gregory and Straith, and most probably by many others.

It is gratifying to be able to show that General Boxer, R.A., in his treatise on Artillery, gives the following;—

Abscisses.	Simultaneous		Ordinates.	Abscisses.	Simultaneous		Ordinates.
	Ascent.	Descent.			Ascent.	Descent.	
100	0·87269	0·05624	0·81645	900	7·85421	5·1328	2·72141
200	1·74538	0·2285	1·51688	1000	8·7269	6·4193	2·3076
300	2·61807	0·52211	2·09596	1100	9·59959	7·874	1·72559
400	3·49076	0·94233	2·54843	1200	10·57228	9·4982	0·97408
500	4·36345	1·4945	2·86895	1300	11·34497	11·296	0·04897
600	5·23614	2·1837	3·05244	1400	12·21766	13·274	— 1·05634
700	6·10883	3·0157	3·69313	1500	13·09035	15·436	— 2·34565
800	6·98152	3·9954	2·98612	1600	13·96304	17·79	— 3·82696

The following tabulated form shows the measurements of the curve described by the ball which, at elevation 32° 51′ 29·1″, obtained a range of 5018 yds.;—

Abscisses.	Simultaneous		Ordinates.	Abscisses.	Simultaneous		Ordinates.
	Ascent.	Descent.			Ascent.	Descent.	
702·42	453·7	16·2	437·5	9601·4	6201·5	3330	2871·5
1298·12	903	64·4	838·6	10150·1	6555·9	3763·2	2792·7
2086·6	1347·7	144	1203·7	10684·5	6901·1	4219·4	2681·7
2767·35	1787·4	254·4	1533	11204·2	7236·7	4698	2538·7
3439·87	2221·8	395	1826·8	11708·5	7562·4	5198·4	2364
4103·65	2650·5	565·2	2085·3	12197·1	7877·9	5720	2157·9
4758·19	3073·3	764·4	2308·9	12669·3	8182·9	6262·2	1920·7
5403	3489·7	992	2497·7	13124·8	8477·1	6824·4	1652·6
6037·54	3899·6	1247·4	2652·2	13563	8760·2	7406	1354·2
6661·34	4302·5	1530	2772·5	13983·3	9031·6	8006·4	1025·2
7273·88	4698·1	1839·2	2858·9	14385·4	9291·3	8625	666·3
7874·66	5086·2	2174·4	2911·8	14768·6	9538·6	9261·2	277·4
8463·18	5466·3	2535	2931·3	15131·5	9773·6	9914·4	— 140·8
9038·93	5838·2	2920·4	2917·8				

If this ball were now fired vertically upwards, its time of flight would be 42 seconds, its motions as follows, namely;—

Seconds of Time.	Simultaneous		Actual Height attained.	Simultaneous		Seconds of Time.
	Ascent.	Descent.		Descent.	Ascent.	
21	15082·2	6262·2	8820	6262·2	15082·2	21
20	14520	5720	8800	6824·4	15624·4	22
19	13938·4	5198·4	8740	7406	16146	23
18	13338	4698	8640	8006·4	16646·4	24
17	12719·4	4219·4	8500	8625	17125	25
16	12083·2	3763·2	8320	9261·2	17581·2	26
15	11430	3330	8100	9914·4	18014·4	27
14	10760·4	2920·4	7840	10584	18424	28
13	10075	2535	7540	11269·4	18809·4	29
12	9374·4	2174·4	7200	11970	19170	30
11	8659·2	1839·2	6820	12685·2	19505·2	31
10	7930	1530	6400	13414·4	19814·4	32
9	7187·4	1247·4	5940	14157	20097	33
8	6432	992	5440	14912·4	20352·4	34
7	5664·4	764·4	4900	15680	20580	35
6	4885·2	565·2	4320	16459·2	20779·2	36
5	4095	395	3700	17249·4	20949·4	37
4	3294·4	254·4	3040	18050	21090	38
3	2484	144	2340	18860·4	21200·4	39
2	1664·4	64·4	1600	19680	21280	40
1	836·2	16·2	820	20508·2	21328·2	41
			0	21344·4	21344·4	42

It is much to be regretted that we have not any record of practice at great elevations, which would give us the measure of the fall by gravity in 50, 60, or even 70 seconds of time. As there is no limit to the resistive strength that might be given to the 15-in. columbiad, by shrinking on steel tubes, there can be no reason why this piece, which, with a charge of 40 lbs. of powder, at

elevation 74° 3' 38·7", would get a range of 1950 yds., should not be fired at an elevation of 85° with a charge of 80 or 100 lbs. of powder; the observed time of flight and measured range would be very instructive. At present the 42 seconds' flight is the very outside of the limit we can calculate with certainty; our Table of the series or progression fails altogether at 54·4".

TABLE G.

Time.	Abscisses.		Simultaneous Ascent.		Simultaneous Descent.	Ordinates.		
		Diff.		Diff.			Diff. 1.	Diff. 2.
1	702·4223	702·4223	453·6889	453·6889	16·2	437·4889	437·4889	
2	1298·1245	695·7022	903·0373	49·3484	64·4	838·6373	401·1484	36·066
3	2086·6026	88·4781	1347·7197	44·6824	144	1203·7197	365·0824	35·7915
4	2767·3526	80·75	1787·4106	39·6909	254·4	1533·0106	329·2909	35·617
5	3439·8705	72·5179	2225·7845	34·3739	395	1826·7845	293·6739	35·1425
6	4103·6523	63·7818	2650·5159	28·7314	565·2	2085·3159	258·5314	34·968
7	4758·1940	54·5417	3073·2793	22·7634	764·4	2308·8793	223·5634	34·6935
8	5402·9916	44·7976	3489·7492	16·4699	992	2497·7492	188·8699	34·419
9	6037·5411	34·5495	3899·6001	09·8509	1247·4	2652·2001	154·4509	34·1444
10	6661·3385	23·7974	4302·5065	02·9064	1530	2772·5065	120·3065	33·8701
11	7273·8798	12·5413	4698·1429	395·6364	1839·2	2858·9429	86·4364	33·5855
12	7874·6610	00·7812	5086·1838	88·0409	2174·4	2911·7838	52·8509	33·2472
13	8463·1781	588·5171	5466·3037	80·1199	2535	2931·3037	19·5199	33·3310
14	9038·9271	75·749	5838·1771	71·8734	2920·4	2917·7771	13·5266	33·0465
15	9601·4040	62·4769	6201·4785	63·3014	3330	2871·4785	46·2986	32·7720
16	10150·1048	48·7008	6555·8824	54·4039	3763·2	2792·6824	78·0961	31·7975
17	10684·5255	34·4207	6901·0633	45·1809	4219·4	2681·6633	111·0191	32·9230
18	11204·1621	19·6366	7236·6597	35·5964	4698	2538·6597	143·0036	32·9845
19	11708·5106	04·3485	7562·3821	25·7224	5198·4	2363·9821	174·6776	31·6740
20	12197·0750	488·5644	7877·9050	15·5229	5720	2157·9050	206·0771	31·3995
21	12669·3433	72·2683	8182·9029	04·9979	6262·2	1920·7029	237·2021	30·1250
22	13124·8115	55·4682	8477·0503	294·1474	6824·4	1652·6503	268·0526	30·8505
23	13562·9756	38·1641	8760·1762	82·9714	7406	1354·1762	298·4741	30·4215
24	13983·3316	20·356	9031·6461	71·4699	8006·4	1025·2461	328·9301	30·4560
25	14385·3755	02·0439	9291·2890	59·6429	8625	666·2890	358·9571	30·0270
26	14768·6033	383·2278	9538·6249	47·4904	9261·2	277·4249	388·8641	29·9070
27	15131·5110	63·9077	9773·6373	35·0124	9914·4	−140·7627	428·1876	29·3235

TABLE H.—ELEVATIONS.—INITIAL VELOCITY 840 FEET A SECOND.

Time.	Ascent.		Descent.	Logm. Sine	Elevation.			Ranges.	
					°	′	″	feet.	yards
1	836·2	836·2	16·2	8·2872048	1	6	36	836	279
2	1664·4	28·2	64·4	5876282	2	13		1663·1	554
3	2484	19·6	144	7632109	3	19		2479·8	826·6
4	3294·4	10·4	254·4	8872138	4	25		3288·5	1096
5	4095	00·6	395	9843432	5	32		4075·9	1359
6	4885·2	790·2	565·2	9·0633199	6	38		4852·4	1617·5
7	5664·4	79·2	764·4	·1301668	7	45		5612·6	1871
8	6432	67·6	992	881657	8	52		6355	2118
9	7187·4	55·4	1247·4	·2394339	9	59		7078·3	2359
10	7930	42·6	1530	854182	11	7		7845	2615
11	8659·2	29·2	1839·2	3271512	12	15		8461·6	2820·5
12	9374·4	15·2	2174·4	653959	13	24		9118·7	3039·6
13	10075	00·6	2535	·4007340	14	34		9750·8	3250
14	10760·4	685·4	2920·4	336139	15	44		10356·5	3452
15	11430	69·6	3330	643980	16	55		10938·3	3646
16	12083·2	54·2	3763·2	933753	18	8		11482·2	3827
17	12719·4	36·2	4219·4	·5207841	19	22		11999·3	3999·8
18	13338	18·6	4698	468223	20	37		12483·2	4161
19	13938·4	00·4	5198·4	716568	21	53		12932·7	4311
20	14520	581·6	5720	954294	23	11		13345·8	4449
21	15082·2	62·2	6262·2	·6182622	24	31		13720·7	4573·6
22	15624·4	42·2	6824·4	402612	25	53		14055·2	4685
23	16146	21·6	7406	615188	27	18		14343·8	4781
24	16646·4	00·4	8006·4	821270	28	44		14598·2	4866
25	17125	478·6	8625	·7021285	30	14	30·3	14794·44	4931·5
26	17581·2	56·2	9261·2	216188	31	47		14944·3	4981
27	18014·4	33·2	9914·4	406466	33	23		15040·2	5013

TABLE H—*continued.*

Time.	Ascent.		Descent.	Logm. Sine.	Elevation.			Ranges.	
					°	′	″	feet.	yards.
28	18424	409·6	10584	9·7592659	35	3		15080·5	5027
29	18809·4	385·4	11269·4	775259	36	48		15059·6	5020
30	19170	60·6	11970	954721	38	38		14973·6	4991
31	19505·2	35·2	12685·2	·8131469	40	34		14816·8	4939
32	19814·4	09·2	13414·4	305903	42	36		14583	4861
33	20097	282·6	14157	478400	44	47		14264·2	4754·7
34	20352·4	55·4	14912·4	649319	47	6		13850·2	4617
35	20580	27·6	15680	819007	49	38		12329·4	4443
36	20779·2	119·2	16450·2	987799	52	22		12687·3	4229
37	20949·4	170·2	17249·4	·9166024	55	37		11803·7	3934·6
38	21090	140·6	18050	324006	58	51		10908	3636
39	21200·4	110·4	18860·4	492068	62	49	34·02	9682	3227
40	21280	79·6	19680	660535	67	39		8095·4	2698·5
41	21328·2	48·2	20508·2	829733	74	3		5857·1	1952·4
42	21344·4	16·2	21344·4	10·0000000	90			0·0	0·0

TABLE I.—ELEVATION 45°.

Range.		Time of Flight.	Oblique Ascent.	Mean Velocity.	Initial Velocity.
yards.	feet.				
100	300	4·35	424·264	97·53	162·88
200	600	6·2	848·528	136·86	227·624
300	900	7·61	1272·792	167·25	275·88
400	1200	8·82	1697·056	192·31	315·7
500	1500	9·9	2121·32	214·27	349
600	1800	10·87	2545·584	234·07	380·5
700	2100	11·79	2969 848	251·9	407·2
800	2400	12·63	3394·112	268·73	433·2
900	2700	13·45	3818·376	283·88	454·4
1000	3000	14·2	4242·64	298·8	476·411
1100	3300	14·93	4666·904	312·58	496·112
1200	3600	15·63	5091·168	325·73	515·327
1300	3900	16·3	5515·432	338·37	533
1400	4200	16·96	5939·696	349·04	554
1500	4500	17·59	6363·96	361·19	565·1
2000	6000	20·52	8485·28	413·41	634·5
2500	7500	23·15	10606·6	458·17	690
3000	9000	25·6	12727·92	497·18	734·656
3500	10500	27·88	14849·24	532·54	772·336
4000	12000	30·05	16970·56	564·71	805·1
4500	13500	32·11	19091·88	594·46	830
5000	15000	34·12	21213·2	621·72	850

We will hereafter describe two useful instruments, adapted by Major-Gen. Anstruther, in his investigations respecting the motion of projectiles.

When the parabolic theory of the motion of projectiles in vacuo was first brought forward it was supposed by many clever men that the resistance of the fluid in which a projectile must necessarily move might be disregarded in calculation, or that at least a compensation might be found by experiment or otherwise which would render the parabolic theory capable of practical application. Persons who in those remote times were sceptical on this point would most likely have been treated with the same kind of good-natured contempt that anyone in the present day would meet with who dared to express a doubt as to the truth of the generally-received doctrine, that the application of the parabolic theory in practice is quite inadmissible on account of the resistance of the air to a projectile moving with the velocity which it is practically necessary to consider. It is the fashion to assert as an indisputable fact that nothing can be further from the true trajectory of a projectile subject to the resistance of the air, and moving with a considerable velocity, than a parabolic curve, and this we are told *everybody knows;* if everybody also knew what the true curve of the trajectory was, we should be in a very favourable position for solving all the useful practical problems appertaining to the science of gunnery; but here we are left completely in the dark, to arrive at the conclusion that what the real curve of a trajectory is, *nobody knows.*

The question therefore naturally arises, What are we to do? If theory, as it is called, unsupported by practical results, cannot be relied upon, and must consequently be altogether disregarded, isolated experiments, without the support of some theory enabling us to generalize, classify, and arrange the results of practice, so as to render them applicable to all circumstances, are little if at all better than the disregarded theory. That the range of a projectile moving through the air falls far short of the range calculated upon the supposition that this same projectile moves in vacuo, is

a well-known fact; but at the same time, we approach nearer and nearer to a coincidence with the calculated range as the projective force and velocity are diminished. It could hardly have been expected that calculations established upon the supposition that the projectile moved in vacuo should be found applicable in practice without certain modifications; but it was at first supposed that a system of compensation or rectification might be easily arrived at, which would bring the disturbing elements caused by the resistance of the atmosphere and other causes quite within manageable limits, and that the established theory would not only serve as a sure guide to experiment, but also as the means of generalizing and forming practical rules. But this idea seems to have been long abandoned. The force of resistance, at first almost ignored, seems to be now exaggerated to such a degree that all thoughts of attempting to establish a practical theory seem to be hopelessly relinquished. We seem to have got into a kind of chaos of ideas on the subject of projectiles, without anything to rest upon besides a blind reliance upon tables, which we worship and believe in, and which are framed according to a system which, of course, *everybody knows*, but which nobody could exactly describe to you if they were individually asked, and upon an implicit faith in some old traditional rules with reference to what are called the laws of gravity, which have been preserved for ages, and are reproduced as a matter of course in all works upon gunnery.

The laws of gravity seem to be like the laws of the Medes and Persians, which no one, except Anstruther, should gainsay or attempt to alter; and consequently they seem to have been taken as the starting point of all discussions respecting the theory of projectiles, and no one, except Anstruther, has been so wicked as for a moment to question the truth of these time-honoured institutions, consequently they have remained unaltered, as venerable monuments of the past.

That our theory of projectiles has proved a practical failure few will be disposed to deny. But the following question remains to be answered, Shall we relinquish all further theoretical inquiry, drop the matter in despair, and trust to experiment, tables, trial shots, and chance? or shall we do what a sensible workman generally does when his first effort at success is unsatisfactory, namely, look to his tools and machinery to see that there is no flaw of construction or no miscalculation as to the principles of action, and also look about him to see if there are no modern discoveries or new scientific inventions which may assist him in arriving at the required result? In the present article we propose to take the latter course, and in the first place to say a few words about the laws of gravity, which may be considered as the machinery and tools with which we have been working so long. That the resistance of the air must form an important element in all calculations with reference to the trajectory of projectiles there can be little doubt; but we think it is at least questionable whether we ought to attribute the whole of the glaring discrepancy which is found to exist between theory and practice to that cause alone. It will be at least worth while to examine the matter in detail, in order to ascertain if there are not other sources of error, and whether corrections cannot be applied so as to bring the total amount within manageable limits.

Suppose a curve either convex or concave to the axis of the abscisses to be of such a nature that while the abscisses denote the time, the corresponding ordinates shall denote the measure of the force during such time; then, because effects are proportionate to their causes, the instantaneous velocities produced or generated by the forces are proportionate to the forces which generate them. $d\,a = y\,.\,d\,x$ expresses the differential of the area included by a curve, and the ordinates of any points upon it, as the function of the co-ordinates; therefore, substituting v for a, f for y, and t for x, we have $d\,v = f\,.\,d\,t$. Taking as before the abscisses to express the time, but the corresponding ordinates to denote the velocities generated or produced, it will be evident that in this case in the expression $d\,a = y\,.\,d\,x$, a may be taken to represent the space passed over with the velocity indicated by the abscisses; we may therefore substitute s for a, v for y, and as before, t for x, which gives $d\,s = v\,.\,d\,t$. When we have to deal with uniform velocity we may take v as constant; therefore, integrating the last expression, $s = v\,t$, from which we deduce the following;—

In uniform velocity—

1. The spaces described in the same time are as the velocities.
2. The spaces described with the same velocity are as the times.
3. Spaces described with unequal velocities and in different times are as the velocities and times conjointly.

There can be no doubt whatever that the above expressions are correct exponents of the value of uniform forces or velocities under all the circumstances to which they may be applied. But with reference to the subject we are now dealing with, uniform force or the resulting uniform velocity can be only taken as a measure of, or as a means of indicating the comparative values of the varying forces, or of the accelerated or retarded velocities involved in the motion of bodies subjected to the influence of attraction combined with that of a projectile force, while passing through a resisting medium. We here enter upon a very intricate subject, so difficult that in order to facilitate calculation we seem to have condoned many errors in theory as being separately too minute and insignificant to have any important effect upon the practical result, the consequence of which appears to be that the aggregate has produced an amount of accumulated error which renders our calculations practically useless, and then we exonerate ourselves by laying the whole blame upon the atmosphere. We can only estimate or compare forces by noting their effects upon matter with which we are conversant, and then by a careful analysis and comparison endeavour to deduce as close an approximation as possible to the laws of action of the forces under investigation. Leaving out of consideration slight deviations and perturbations, we may assume as an established fact that the orbits of the heavenly bodies subjected to the influences of attraction and some original mysterious projectile force are elliptical. This, due to John Kepler, is at least the closest approximation to their line of motion which we have as yet arrived at.

Starting from this point, we shall now proceed to show that if the centre of force be situated in one of the foci of an ellipse, a body whose line of motion is on the periphery must be attracted by a force whose intensity is inversely proportional to the square of the distance from the centre of

attraction, and that therefore this is the closest approximation to the law of attraction which we have as yet attained to. In order to this we shall in the first place establish two equations with reference to centripetal forces in general.

We shall suppose that a body projected from a given point A, Fig. 3347, in a given direction A E, with a given velocity, is attracted by a force which acts according to any law whatever towards a fixed point C. Take the curve A M B, which we will express by z, to represent the locus of motion of a particle subject to the combined influences of the projectile and attractive forces; C A, C M radii vectors, which we will represent by y, indicating the lines of action of the attractive force at any points A and M in the curve A M B; A E, M S tangents at the points A and M, and C E, C S perpendiculars upon the tangents from the fixed point C.

3347.

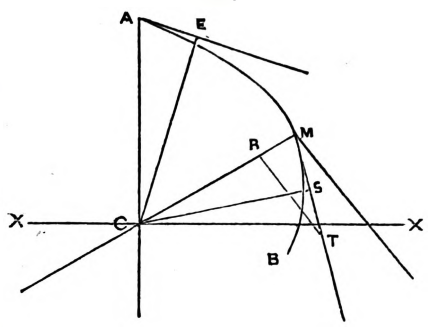

From any point T in the tangent at M let fall the perpendicular T R upon the line C M. Then T M, M R, T R, may be taken respectively to represent dz, dy and dx.

By the resolution of forces C M, M S as the force in the direction C M to the force in the direction of the tangent at the point M. By similar triangles M T : M R :: C M : M S; or if we take f to express the centripetal force at the point M, $dz : dy :: f : \frac{dy}{dz} f$, which evidently expresses the force in the direction of the tangent at M. Substituting this value for f in the expression $dv = f.dt$ (f is for force in general), we obtain $dv = \frac{dy}{dz} f.dt$; $dv.dz = f.dy.dt$; $\frac{dv.dz}{f.dy} = dt$. Eliminating dt by means of the equation $ds = v.dt$, which in this case is represented by $dz = v.dt$, we get $\frac{dv.dz}{f.dy} = dt = \frac{dz}{v}$; $v.dv = f.dy$, which, when y increases as the velocity v diminishes, becomes $v.dv = -f.dy$.

Taking the two equations already established, $dv = f.dt$ and $dz = v.dt$, upon the supposition that the evanescent intervals of time are equal to each other, and consequently dt uniformly constant, the differential of the latter expression becomes $d^2z = dv.dt$. Substituting the above value for dv, we have $d^2z = f.dt^2$. C M : C S as the force in the direction C M is to the force in the direction perpendicular to the tangent at M. Taking s to represent the perpendicular C S, we have $y : s :: f : \frac{s}{y} f$, which represents the force in the direction perpendicular to the tangent at M. Substituting this value for f in the above expression, we have $d^2z = \frac{s}{y} f.dt^2$. By similar triangles T M : M R :: C M : M S, $dz : dy :: y : \frac{y.dy}{dz}$; therefore $\frac{y.dy}{dz} = $ M S. The radius M S is to the radius M T as the differential of the circular arc described by the point S (which may evidently be represented by ds, the differential of the tangent at that point) to the differential of the circular arc described by the point T, which may be taken to represent the second differential of z with respect to the space T M $= dz$. Therefore $\frac{y.dy}{dz} : dz :: ds : \frac{ds.dz^2}{y.dy}$, $\frac{ds.dz^2}{y.dy} = d^2z$; therefore $\frac{s}{y} f dt^2 = d^2z = \frac{ds.dz^2}{y.dy}$, $\frac{s}{y} f dt^2 = \frac{ds.dz^2}{y.dy}$; but $dz = v dt$, $\frac{dz^2}{} = dt^2$. Substituting this value for dt^2, $\frac{s}{y} f \frac{dz^2}{v^2} = \frac{ds.dz^2}{y.dy}$, $f.dy.s = v^2.ds$.

Having now established the two equations $v.dv = -f.dy$ and $f.dy.s = v^2.ds$, we can eliminate f. $-\frac{v dv}{dy} = f = \frac{v^2 ds}{dy s}$, $-s.dv = v.ds$, $v.ds + s dv = 0$. Integrating, we get $v.s = C$. Taking d to represent the perpendicular C E to the tangent at the initial point A, and c the initial velocity, it will be evident that when v becomes c, s becomes d; therefore $c d = C$, and the corrected integral will be $v.s = c d$.

3348.

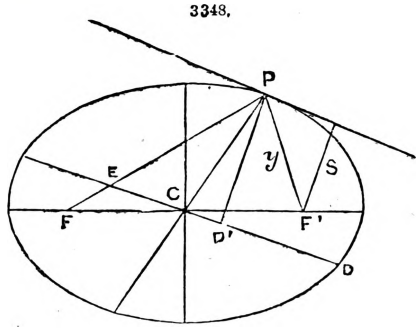

The areas of all parallelograms circumscribing an ellipse formed by drawing tangents at the extremities of two conjugate diameters are constant, each being equal to the rectangle under the axes.

Take a to represent the semi-transverse axis, and b the semi-conjugate axis; P C, C D, Fig. 3348, two semi-conjugate diameters, $b.a =$ P P' C D, $\frac{b a}{\text{C D}} =$ P P'.

The angles made by the focal distances with the tangent are equal and the angle at P is equal to the angle at E on account of the tangent being parallel to the diameter E D; therefore, by similar triangles, $y : s :: $ P E : P P', $\frac{s.\text{P E}}{y} =$ P P'. If straight lines be drawn from the foci to a vertex of any

diameter, the distance from the vertex to the intersection of the conjugate diameter with either focal distance is equal to the semi-transverse axis,

$$\text{P E} = a, \frac{s.a}{y} = \text{P P}'; \quad \frac{b.a}{\text{C D}} = \text{P P}' = \frac{s.a}{y}, \quad s = \frac{b.y}{\text{C D}}.$$

The rectangle under the focal distances of the vertex of any diameter is equal to the square of the semi-conjugate diameter, $\text{F P}.y = \text{C D}^2$; but the focal distances are equal to the transverse axis, $\text{F P} + y = 2a$, $\text{F P} = (2a - y)$. Substituting value for F P, $(2a - y).y = \text{C D}^2$, $\sqrt{(2a-y)y} = \text{C D}$. Substituting this value in $s = \frac{b.y}{\text{C D}}$, we have $s = \frac{b.y}{\sqrt{\{(2a-y)y\}}}$. Substituting this value for s in the equation $v.s = c.d$, $v.\frac{b.y}{\sqrt{\{(2a-y)y\}}} = c.d$, $v.b.y = c.d.\sqrt{\{(2a-y)y\}}$, $v^2.b^2.y^2 = c^2.d^2.(2a-y)y$, $v^2.b^2.y = c^2.d^2.(2a-y)$, $v^2 = \frac{c^2.d^2}{b^2}\frac{2a-y}{y}$. Differentiating, we obtain $-v.dv = \frac{c^2.d^2}{b^2}.\frac{a.dy}{y^2}$; but $-f\,dy = v.dv$; $\therefore f\,dy = -v.dv$, $f\,dy = -v.dv = \frac{c^2.d^2}{b^2}.\frac{a.dy}{y^2}$, $f = \frac{c^2.d^2.a}{b^2}.\frac{1}{y^2}$. Take $\frac{c^2.d^2.a}{b^2} = \text{A}$, $f = \frac{\text{A}}{y^2}$, which shows that the force of attraction is inversely proportional to the square of the variable distance y of a particle moving in an elliptical orbit, the centre of the attracting force being in one of the foci. This therefore is the closest approximation to the law of attraction which has as yet been attained. The same law will be found to exist with reference to a body moving on the arc of a parabola, the centre of attraction being situated in the focus, which can be shown as follows;—

Let C, Fig. 3349, be the focus of the parabola A M; A the vertex. The perpendicular s to the tangent at the point M is a mean proportional between the distance y from the focus to that point, and the distance C A from the focus to the vertex. Take $\text{C A} = a$, $a.y = s^2$, $\sqrt{a.y} = s$. Substituting this value for s in the equation $vs = cd$, we have $v.\sqrt{(ay)} = c.a$. A C is perpendicular to the tangent at the vertex; therefore $a = d$, $v.\sqrt{(ay)} = c.a$, $v^2 = \frac{c^2.a}{y}$. Differentiating,

3349.

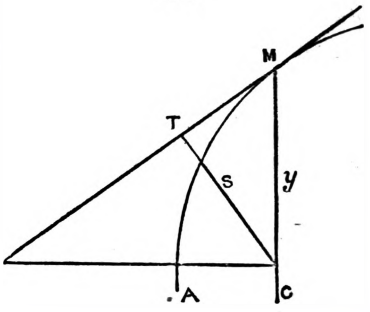

$$v.dv = -\frac{c^2 a.dy}{2y^2}, \quad -v.dv = \frac{c^2 a.dy}{2y^2};$$

but $f.dy = -v.av$, $f.dy = -v.dv = \frac{c^2 a.dy}{2y^2}$, $f = \frac{c^2.a}{2}.\frac{1}{y^2}$.

Take $\frac{c^2 a}{2} = \text{A}$, $f = \frac{\text{A}}{y^2}$.

If the earth was perfectly spherical the directions of gravity would all concur at its centre. Therefore, considering the earth as a sphere and applying the laws of attraction founded upon astronomical observations, we might suppose that the force of gravity with reference to bodies near the surface of the earth acts upon lines tending towards such central point with an intensity varying inversely as the square of the distance from the centre of attraction. That this is the true law of attraction, so far as up to the present time human reason can recognize it, seems to be generally admitted by all writers upon the science of gunnery. But it seems to be thought that the working out of the problems involved in such a law in all their integrity, so as to bring them within the scope of practical utility, would require the command of a calculus more powerful than any we are at present in possession of. Therefore, in order to bring the subject within the grasp of comparatively easy calculation, we suppose;—

1st. That the lines of action of the force of gravity, instead of all tending to a common point at the centre of the earth, are all parallel to each other.

2nd. That within the space above the surface of the earth which we have to consider with reference to the motion of projectiles, we may dispense with a scrupulous adherence to the established laws of gravity.

In order to justify ourselves in these suppositions we endeavour to define the limits of error incurred as follows;—

And first as to the parallelism of the lines of action of the attractive force.

Taking the radius of the earth at 3965, nearly, miles, 6978400 yds.; the length of one minute of a degree to such a radius would be over 2000 yds. A mile is only 1760 yds.; therefore within a lateral range of one mile the limit of error involved in considering the lines of attraction parallel instead of tending to a common point would be within one minute of a degree. As the centre of attraction is more and more removed from any points under consideration, the more will the lines of action of the attracting force tend towards parallelism. Consequently, considering the lines parallel is tantamount to considering the centre of attraction removed to an infinite distance.

We have assumed the distance of one mile as the lateral space necessary to consider with reference to the motion of projectiles, in our first supposition, and in the second we shall consider the same vertical distance as being far beyond the greatest height which can be reached by the trajectory of projectiles propelled by any human contrivance as yet discovered.

Taking the radius of the earth at 3965 miles, and assuming that the power of attraction is

inversely proportional to the square of the distance from the centre, $(3966)^2 - (3965)^2$ will represent the difference in the intensity of the force at the surface of the earth and at a mile above it, $(3966)^2 - (3965)^2 = 7931$, $(3965)^2 = 15721000$, the thousandth part of which is 15721. The half of this is 7861. If therefore we take $f = (3965)^2$ as the representative of the attractive force at the surface of the earth, the difference in the intensity of the force at the surface and a point one mile above it may be expressed by the number 7931, which is very little in excess of $7861 = \frac{1}{2000} f$.

The supposition founded upon this reasoning is that we may assume the force of gravity (which is the name given to the attracting force) either as constant or as influenced by any law we please, or both, first one and then the other, for the vertical space of one mile above the surface of the earth; and that the limit of the error thus incurred will be the $\frac{1}{2000}$ part of the intensity of the force of attraction at the surface.

This mode of reasoning is very plausible, and would be conclusive if we had to deal with any of the palpable material subjects familiar to our daily experiences, for the $\frac{1}{2000}$ part of anything is in most cases a very small matter, and may be generally neglected without producing any sensible error in practice. But we have now to deal with a very subtle mysterious power, of the essence of which we know next to nothing; we approach those dark limits which circumscribe the action of the human intellect, and we ought therefore to feel our way very carefully as we proceed. So long as we have only to deal with ratios and comparisons, we are tolerably safe in drawing inferences, but we think it is very questionable whether we are justified in assuming that the neglect of the $\frac{1}{2000}$ part of the entire force of gravity at the surface of the earth will produce no sensible error in calculation, when at the same time we can form only a very vague conception of what the intensity of that force is, and if so, here at the very outset of our investigations is a most prolific source of error. Up to the present time, however, the subject has not been considered from this point of view; on the contrary, it has been taken as a fact, established by conclusive reasoning, that we may, within the limits assigned, assume almost any latitude in dealing with the force of gravity when applied to the theory of projectiles. And with this understanding we proceed to frame what are commonly called the laws of gravity.

Most people who have not closely considered the subject will be under the impression that there is no difficulty whatever in forming a perfectly clear and defined conception of the continued action of any given force. But when we come to analysis, reasoning, and calculation, we find that the only means we have of dealing with the matter is to consider that the force acts by successive impulses or solicitations, equal or otherwise, as the case may be, at the commencement or the end of very small equal intervals of time or of space measured on the line of action of the force.

If we take a to represent the small unit of time, and b the small unit of space, we must in the nrst place find an expression for the initial intensity of the force by supposing that it is such as to cause a particle of matter to move upon the line of action of the force through the space $A\,b$ during the unit of time a, or else that it is such as to cause the particle to move on the same line over the unit of space b during the time $A\,a$, the coefficient A being a quantity determined by experiment or otherwise. For instance, assuming the law which seems to be received as the true law of attraction, namely, that the intensity of the force varies inversely as the square of the distance from the centre of force, and supposing that during the first unit of time, which is usually taken at one second, d represents the distance passed over by a particle of matter, in consequence of the initial solicitation of the force, d^2 will evidently express the intensity of the force at the termination of the first second. If the particle were subject to the influence of this force alone, it would evidently descend during the next second, with a uniform velocity, a distance $= d^2$; but during its descent it is subjected to d^2 solicitations, each successively equal to the square of that immediately preceding it. The distance will therefore be expressed by $d^2 + d^{2\cdot 2} + d^{2\cdot 2\cdot 2} \ldots . d^{d^2-2} + d^{d^2}$, a series, the exponents of the consecutive terms of which form a geometrical series of which the first term and the common ratio are 2 and the number of terms of the series d^2.

The expression for the distance corresponding to each of the succeeding seconds will evidently be a series of the same form, the last term of each series being taken for the first term, as well as for the number of terms of the succeeding series. The sum of all the series will express the distance actually descended in any given time, the time t expressing the number of series. If we should suppose the intensity of the attractive force to be inversely as the distance from the centre of force, taking d as before to represent the distance passed over during the first second, the intensity of the force at the end of the first second will evidently be represented by $2\,.\,d$; the particle of matter under the influence of this force alone would evidently descend a distance equal $2\,.\,d$, but during the descent it will be subjected to two solicitations of gravity each separately equal to d. Therefore at the end of the second second the force will be represented by $4\,.\,d$; at the end of the third second by $16\,.\,d$, &c. Therefore $d + 2^2\,.\,d + 2^{2\cdot 2}\,.\,d \ldots . 2^{t-2}\,.\,d + 2^t\,.\,d$, a series of which the exponents of the coefficients of the terms form a geometrical series of which the first term and the common ratio are 2, and the number of terms t will express the distance descended by a particle of matter during the time t.

In framing the laws of gravity this latter supposition seems to have been to a certain extent adopted, for we are told that during the first second of descent d becomes $2\,d$, and is then called g. This is so far intelligible, but what follows is, to say the least of it, rather startling, and a little difficult to be understood, for d expires in giving birth to g, and this posthumous offspring is not only twice as big as his progenitor, but he appears to be endowed with the most extraordinary and supernatural powers, for he has a capability of generating a constantly increasing velocity, which ought to be simply an exponent of his own increase, but wonderful to relate, g never alters. He goes down to infinity for the purpose of settling some small matters relative to terminal velocity (of which we shall speak presently), and comes up again quite unchanged; he is employed to solve complicated problems with reference to variably accelerated or retarded velocity; he is blown up by gunpowder, forced into steam boilers, up and down funnels, through fire and water, but is not

in the slightest degree affected by all these vicissitudes. Whenever we come across him we find him placidly and systematically doing his duty as the representative of the force of gravity—in all places and at all times the old familiar g, exactly as he appeared at his birth.

The fact of a heavy body being suspended in space without any support, and being in a state of rest, and then commencing suddenly to descend by the influence of an initial force which is equal to nothing, may be a conception easily formed in a well-trained mathematical mind, but to the uninitiated it is a little difficult of comprehension.

In order to illustrate as clearly as possible the method adopted of deducing the laws of gravity, we shall return to the language of the differential and integral calculus, taking again the expressions already established, $dv = f\,dt$, $ds = v\,.\,dt$, but supposing the generating power or force of gravity which is represented by f to be constant and invariable. Integrating $dv = f\,.\,dt$, we get $v = f\,.\,t$, $\frac{dv}{f} = dt = \frac{ds}{v}$, $v\,.\,dv = f\,.\,ds$; integrating $v^2 = 2\,.\,f\,.\,s$, $v = f\,.\,t$, $v^2 = f^2\,t^2$, $v^2 = 2fs$, $f^2\,t^2 = v^2 = 2fs$, $ft^2 = 2s$, $\frac{v}{t} = f = \frac{v^2}{2s}$, $2\,.\,s = v\,t$. From the equations thus established, we draw the following conclusions:—1st. From $v = f\,.\,t$ we assume that the velocity acquired by a body falling freely from a state of rest, and being acted upon by gravity alone, is proportional to the time elapsed. 2nd. From $v^2 = 2f\,.\,s$ we assume that the spaces described in the descent are proportional to the squares of the velocities; or by $ft^2 = 2\,.\,s$ to the squares of the times; or by $2\,.\,s = v\,t$ to the times and velocities conjointly.

Comparing the two equations, $s = t\,.\,v$ and $2\,.\,s = t\,v$, the first being referred to uniform velocity and the second being supposed to refer to accelerated velocity, the following inference is drawn. The space described uniformly with the velocity acquired by a body falling freely from a state of rest is double the space described by the body while generating such velocity. This is the foundation upon which a very complicated structure is raised, elaborate tables of reference are compiled, and the changes are rung upon all the various combinations of the quantities of space, time, and velocity, in all of which g plays his invariable part as the representative of gravity and unalterable sameness.

We have given the above few simple differential expressions as illustrating most easily the course followed in constructing the laws of gravity, but the matter is generally explained by a much more elaborate process. We shall now make a few remarks upon this mode of deducing the law of gravity

The effects of gravity are represented by supposing that the force acts by equal solicitations, at the end of equal intervals of time called seconds; it has been proved that the action of the force is inversely proportional to the square of the distance from the centre of attraction. It would therefore seem that the above supposition was as far from the truth as the parabolic curve is stated to be from the true trajectory of a projectile. The intensity of the initial solicitation of the force, and consequently its exponent velocity, are exhibited (upon the supposition that it may be considered constant within assigned limits) with reference to units of time and space as follows. The number of feet descended by a particle of matter during one second of time is in the first instance supposed to be ascertained by accurate experiments with the pendulum, &c. (and of the accuracy of these experiments we shall speak presently); this, which thus becomes a known quantity, is expressed by d. d is at first supposed to represent the value of each of the solicitations which are supposed to take place at the end of each succeeding second, for we find that at the end of the first second d becomes $2\,.\,d$, and is called g, which evidently represents the intensity of the force generated by or resulting from two successive solicitations. In accordance with this assumption, at the end of the second second, three equal solicitations would have taken place; and consequently the resulting force and its exponent velocity would be expressed by $3\,.\,d$. But it is not so; g is now taken to represent the value of the successive solicitations. Although we may have implicit faith in the accuracy of the experiment which introduced d to our notice, g evidently owes his existence to an arbitrary assumption which, although supposed to be admissible within assigned limits, is proved to be very far from the truth. I think, therefore, there is at least room for doubt whether g should be at once unhesitatingly recognized as the legitimate representative and successor of d. It would appear to be quite allowable to form a series according to a certain law, and having ascertained the value, reject the first term upon the supposition that the terms were so small individually that the neglect of one would in the aggregate produce no sensible error. But in the present instance we have not only done this, but we have altered the value of what ought to be the constant increment by substituting g for d. This little sin against fair logical reasoning is glossed over and concealed by ingenious illustrations and high-sounding terms specially framed and adapted for the confusion of useful knowledge; and it seems to be expected that the illegitimacy of g's birth will be condoned upon the ground of his being so very small; but we are afraid this sin against gravity, like all other sins, will be found to bear its fruits, and that something else besides the atmosphere is to be blamed, when we find our theory and practical experiences so very divergent.

The assumption that the spaces described by a falling body in its descent are proportional to the squares of the times is founded upon the supposition that we are justified in considering the generating power or force of gravity, which is represented by f in the expressions involving space, time, and velocity, as constant; but it seems absurd to suppose that we can separate the essence of anything from the exponent that marks its existence, and consider that one varies while the other does not. The laws of gravity now extant, whether fallible or infallible, are evidently dependent upon the accuracy of the experiment by means of which we are supposed to have ascertained the space described by a descending body during one second of time. We shall therefore now say a few words on this subject.

If the circumference of a circle be rolled on a right line, beginning at any point A, the move-

ment being continued till the same point A arrives at the line again, making just one revolution, and thereby measuring out a straight line A B A, Fig. 3350, equal to the circumference of the circle, while the point A in the circumference traces out a curve line A G V C A; the curve thus traced is called the common cycloid; the line A A is called the base; V the vertex; V B the axis;

3350.

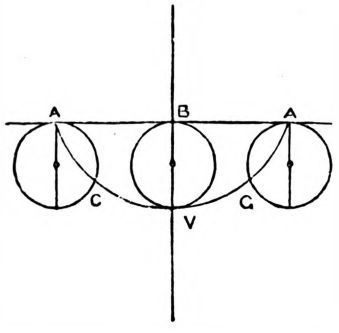

3351.

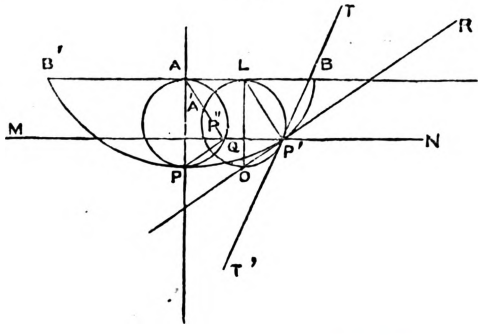

and the circle by the rotatory motion of which the curve is described, is called the generating circle. There are several properties belonging to the species of cycloidal curve called the common cycloid; but we shall only speak of those which immediately relate to the experiment under consideration. As the generating circle rolls along the base of the cycloid, the describing point has two motions; first a progressive motion in a direction parallel to the base B B', Fig. 3351, and secondly, a motion of rotation round the centre of the generating circle. These motions are equal, for, in the time of one revolution of the generating circle, the describing point moves by its progressive motion through the space B B', while by its motion of rotation it moves through a space equal to the circumference of the circle. Suppose the circle to roll from the position A in which the describing point P coincides with the vertex of the cycloid, to the position L in which the describing point has moved to P', when the point which was at A will be now at A'; the distance L A will then be equal to the arc L A' of the circle, since that arc has rolled over L A. The point P', in consequence of the two equable motions already explained, one in the horizontal direction P' N parallel to A B, and the other in the direction of the tangent to the generating circle P' T at the point P', will have an actual motion in a direction equally inclined to each of these lines. The direction of the curve at P', or, what is the same, the direction of a tangent to the curve at that point, will therefore be represented by a line bisecting the angle N P' T, and this line will be the continuation of the chord of the arc of the generating circle between P' and the highest point O; for if L P' be drawn the angle O P' M will be equal to the angle O L P', on account of the similarity of the triangles O Q P' and O P' L. The angle O P T' will also be equal to the angle O L P' in the opposite segment of the circle; therefore the angle O P' T will be equal to the angle O P' Q, or, what is the same, the angle N P' R will be equal to the angle T P' R. The line O P' R therefore bisects the angle T P' N, and is therefore a tangent to the cycloid at P'. Since the arcs A P'' and L P' are equal, and also the arcs P P'' and O P', the lines A P'' and L P' are equal and parallel, and the lines P P'' and O P' are likewise equal and parallel. The tangent at P' is therefore parallel to the corresponding chord P'' P of the generating circle on the axis. The direction of motion in any point of a curve is always in the tangent at that point; consequently, if the motion with which any point m, Fig. 3352, arrives at M was to become uniform, the point m would proceed in the direction of the tangent T M, therefore the directions of the motion in the abscissa A P, ordinate P M, and curve being in the sub-tangent T P, ordinate P M, and tangent T M. The differentials of the abscissa, ordinate, and curve may be represented by the three sides of the triangle T P M, or by the corresponding sides of any similar triangle.

3352.

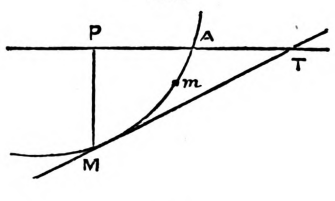

3353.

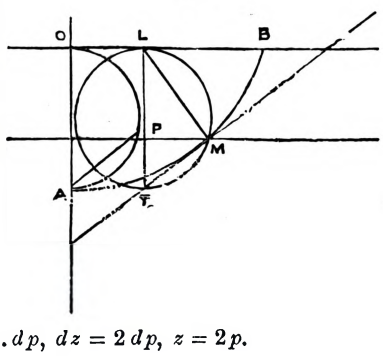

Draw M P, Fig. 3353, perpendicular to the diameter L T of the generating circle. Take L T = a, T P = x, the chord T M = p, and the arc A M = z.

$$\therefore \quad \text{TM} : \text{TL} :: \text{TP} : \text{TM}, \quad p : a :: dx : dz.$$

$$p \,.\, dz = a\, dx.$$

$$\text{TL} : \text{TM} :: \text{TM} : \text{TP}, \quad a : p :: p : x.$$

$$ax = p^2,\ a \,.\, dx = 2p \,.\, dp,\ p \,.\, dz = a \,.\, dx = 2p \,.\, dp,\ dz = 2\, dp,\ z = 2p.$$

Take a to represent the diameter B A, Fig. 3354, of the generating circle, and let A P = y. Upon the supposition that the lines of action of the gravitating force are parallel to the axis and perpendicular to the base of the cycloid, $dz : dy :: f : \frac{dy}{dz} f$. Substituting this value for f in the

equation $dv = f\,dt$, $dv = \frac{dy}{dz}\cdot f\,.\,dt$, $\frac{a\,v\,.\,dz}{f\,.\,dy} = dt = \frac{dx}{v}$, $v\,.\,dv = f\,.\,dy$; and because in this case v increases as y diminishes, $v\,.\,dv = -f\,.\,dy$. If we take d to represent the height fallen through in a second, we must, according to the conventional rule, take $2d$ to express the uniform velocity equal to the velocity generated by falling through the height d; therefore in the equation $v\,.\,dv = -f\,.\,dy$ we are told that we must substitute $2d$ for f in order to obtain the actual value of d in known terms. The equation therefore becomes $v\,.\,dv = -2d\,.\,dy$. But this is in reality nothing more than our old friend g, who seems to be always turning up, like the clown in a pantomime, in some new disguise, and it is only by treating him differentially that we can detect him. However, he is here engaged in fulfilling a sacred duty, for he is on his way to search for the remains of his deceased parent d, who it will be recollected disappeared in such a mysterious manner at the commencement of g's career. Integrating $v\,.\,dv = -2d\,.\,dy$, we get $v^2 = C - 4\,.\,d\,.\,y$. When $y = a$, $v = 0$; therefore $C = 4\,.\,a\,.\,d$, and the corrected integral is $v^2 = 4\,.\,a\,.\,d - 4\,.\,d\,.\,y$, $v = 2\sqrt{(a\,.\,d - d\,.\,y)}$.

3354.

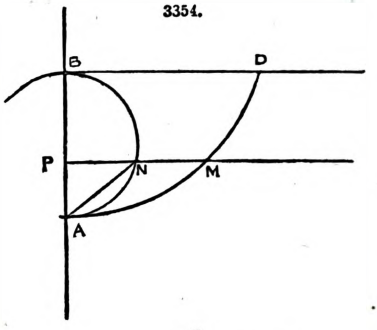

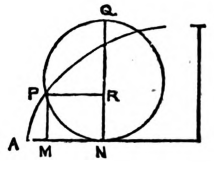

Take p to represent the chord A N,

$$\text{AP} : \text{AN} :: \text{AN} : \text{AB}, \quad y : p :: p : a.$$

$$a\,.\,y = p^2,\ \sqrt{(a\,.\,y)} = p,\ z = 2\,.\,p,\ z = 2\sqrt{(a\,.\,y)},\ dz = \frac{a\,.\,dy}{\sqrt{(a\,.\,y)}}.$$

Substituting the values just found for v and dz in the equation $dz = v\,.\,dt$, we get

$$\frac{a\,.\,dy}{\sqrt{(a\,.\,y)}} = 2\sqrt{(a\,.\,d - dy)}\,dt = 2\sqrt{\left\{a\,.\,d\left(1 - \frac{y}{a}\right)\right\}}\,dt.$$

Divide both sides of the equation by $2\sqrt{\left(1 - \frac{y}{a}\right)}$,

$$\frac{a\,.\,dy}{2\sqrt{(a\,y - y^2)}} = \sqrt{(a\,.\,d)}\,dt, \quad \int \frac{a\,.\,dy}{2\sqrt{(a\,y - y^2)}} = \sqrt{(a\,.\,d)}\,t = \text{versin.}^{-1} y$$

to diameter a. When $y = 0$, versin.$^{-1} y$ expresses $\frac{1}{4}$ the circumference of the circle, and t the time of descent through half the cycloid. Take c to represent versin.$^{-1}$ 0 to diameter a, $c = t\,(a\,.\,d)$. Take $t = \frac{1}{2}''$, and consequently the time in the entire arc one second, $c = \frac{1}{2}\sqrt{(a\,.\,d)}$, $c^2 = \frac{1}{4}\,(a\,.\,d)$, $\frac{4\,c^2}{a} = d$; which may be put under the form $\frac{4\,c^2}{a^2}\,a = d$, $\frac{4\,c^2}{a^2} = \pi^2$, $\pi^2\,.\,a = d$.

Take A M $= x$, P M $= y$, Fig. 3354, Q N $= 2a$, arc N P $= \theta$,

$$x = \text{AM} = \text{AN} - \text{NM} = \theta - \text{sin. } \theta = \text{versin.}^{-1} y - \sqrt{(2ay - y^2)},$$

the general expression for the normal is $y\sqrt{1 + \left(\frac{dy}{dx}\right)}$

$$dx = \left\{\frac{a}{\sqrt{2\,a\,y - y^2}} - \frac{a - y}{\sqrt{2\,a\,y - y^2}}\right\} dy = \frac{y}{y^{\frac{1}{2}}\,(2\,a - y)^{\frac{1}{2}}}\,dy,$$

$$\frac{dx}{dy} = \frac{y^{\frac{1}{2}}}{(2\,a - y)^{\frac{1}{2}}} \quad \frac{dy}{dx} = \frac{(2\,a - y)^{\frac{1}{2}}}{y^{\frac{1}{2}}} \quad \left(\frac{dy}{dx}\right)^2 = \frac{2\,a - y}{y}, \quad 1 + \left(\frac{dy}{dx}\right)^2 = \frac{2\,a}{y}$$

$$\sqrt{\left\{1 + \left(\frac{dy}{dx}\right)^1\right\}} = \frac{(2\,a)^{\frac{1}{2}}}{y^{\frac{1}{2}}}, \quad y\sqrt{\left\{1 + \left(\frac{dy}{dx}\right)^2\right\}} = \sqrt{2\,a\,y}.$$

An expression for the radius of curvature is $\frac{(1 + p^2)^{\frac{3}{2}}}{q}$; when $p = \frac{dy}{dx}$ and $q = \frac{d^2 y}{dx^2}$

$$1 + p^2 = \frac{2\,a}{y}, \quad (1 + p^2)^{\frac{3}{2}} = \frac{(2\,a)^{\frac{3}{2}}}{y^{\frac{3}{2}}}, \quad \frac{dy}{dx} = \frac{(2\,a - y)^{\frac{1}{2}}}{y^{\frac{1}{2}}}.$$

Take $z = 2\,a - y$; $\frac{dy}{dx} = \frac{z^{\frac{1}{2}}}{y^{\frac{1}{2}}}$, $\frac{d^2 y}{dx} = \frac{\frac{1}{2}\,y^{\frac{1}{2}}\,z^{-\frac{1}{2}}\,dz - \frac{1}{2}\,z^{\frac{1}{2}}\,y^{-\frac{1}{2}}\,dy}{y}$. But $dz = -dy$,

$$\frac{d^2y}{dx} = \frac{-\frac{1}{2}y^{\frac{1}{2}}z^{-\frac{1}{2}} - \frac{1}{2}z^{\frac{1}{2}}y^{-\frac{1}{2}}}{y}dy = \frac{-\frac{y^{\frac{1}{2}}}{2z^{\frac{1}{2}}} - \frac{z^{\frac{1}{2}}}{2y^{\frac{1}{2}}}}{y}dy = -\frac{2y+2z}{4yz^{\frac{1}{2}}y^{\frac{1}{2}}}dy.$$

Substituting value for z, $\frac{d^2y}{dx} = -\frac{2y+4a-2y}{4y(2a-y)^{\frac{1}{2}}y^{\frac{1}{2}}}dy = -\frac{4a}{4y^{\frac{3}{2}}(2a-y)^{\frac{1}{2}}}dy$; but

$dy = \frac{(2a-y)^{\frac{1}{2}}}{y^{\frac{1}{2}}}dx$. Substituting this value for dy, $\frac{d^2y}{dx} = -\frac{a}{y^2}dx$, $\frac{d^2y}{dx^2} = -\frac{a}{y^2} = q$. Substituting these values, $\frac{(1+p^2)^{\frac{3}{2}}}{q} = \frac{(2a)^{\frac{3}{2}}}{y^{\frac{3}{2}}} \cdot \frac{y^2}{a} = 2^{\frac{3}{2}}a^{\frac{1}{2}}y^{\frac{1}{2}} = 2\sqrt{2ay}$. Taking R to represent the radius of curvature and N the normal, we have $R = 2\sqrt{2ay}$, $N = \sqrt{2ay}$; therefore it is evident that in this curve the radius of curvature is equal to twice the normal; therefore at the vertex the radius of curvature is equal to twice the diameter of the generating circle.

The involute of a semi-cycloid A O U, Fig. 3355, is an equal semi-cycloid U P V in an opposite direction, the extremity of the base of the latter being in contact with the vertex of the former. From any point O draw O B parallel to A C, cutting the generating circle in F, and join F U; draw O P a tangent to the cycloid in O, and at E the point where it cuts the line U N, drawn from U, parallel to C A let fall E D perpendicular to U N and equal to C U. With E D as a diameter describe a circle intersecting the tangent O P in some point P. O E is equal and parallel to F U, p. 1749. O F is equal to the arc F *e* U. The circles C F U and D P E are equal by construction. The angles F U E, U E P are also equal, the chord being parallel to the tangent. The chords F U and E P are therefore equal, and as the angles they make with the common tangent to the circles at U and E are equal, the arcs F *e* U and P *n* E subtend equal angles, and are therefore equal. F O E U is a parallelogram, therefore U E is equal to F O. But F *e* U is equal to F O, therefore P *n* E is equal to U E. If the circle E P D had been placed on the line U N at U, and had rolled from U to E, the arc disengaged would have been equal to U E, and the point which was in contact with U would be at P in the periphery of a semi-cycloid U P V equal to A O U; the base line U N of the one being equal and parallel to the base line C A of the other; also the axis N V of the one equal and parallel to the axis C U of the other. And since the same may be shown to obtain with respect to any other point whatever in the arc A O U, the cycloid U P V is the involute of A O U.

3355.

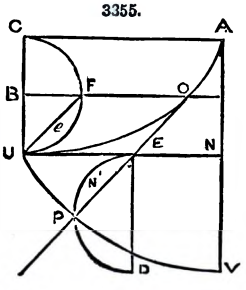

To construct a pendulum which shall oscillate in any given cycloid whose base is parallel to the horizon. —Let V N represent the axis of the cycloid and diameter of the generating circle. Produce V N till V A equals 2 . V N. Through A draw a line A C parallel to N U, the semi-base of the given cycloid; then on A C as a semi-base with axis A N describe a semi-cycloid A O U, and in like manner describe another semi-cycloid turned the contrary way. Then if a pendulum be suspended by a flexible string to the point A, the length of the string being exactly equal to the line A V or arc A O U, which from the nature of the curve are equal to each other, the pendulum oscillating in the plane of the cycloids will in its motion come alternately into contact with the cycloidal cheek A O U and the one corresponding to it on the opposite side of the line A V, and will describe the cycloid of which N V is the axis and N U the semi-base.

The length of a cycloidal pendulum vibrating seconds in any given latitude being ascertained, it will be evident that the diameter of the generating circle is also known, and therefore the quantity a in the equation $\pi^2 . a = d$ becomes a known quantity. The properties of the cycloid with reference to the vibrations of the pendulum are demonstrated upon the supposition that the whole mass of the pendulum is concentrated in a single point, but this cannot be assumed with reference to any vibrating body, for the centre of oscillation will not occupy the same place for any two points in the arc of vibration. This therefore in practice is a source of error.

Much time and trouble appear to have been expended in demonstrating the properties of the Isochrone. The name of this curve alone impresses one with a sort of reverence, and the investigations connected with the vibrations of pendulums and consequent determination of the force of gravity are highly interesting, and would no doubt have been found practically applicable, but for one slight drawback,—it was found that the exceedingly ingenious instrument by means of which the experiments were to be performed could not be made. The difficulties involved in the construction were so great that sufficient accuracy and durability could not be attained to render it practicably serviceable. All thoughts of making use of the cycloidal pendulum seem therefore to have been abandoned, and the theoretical demonstrations appear to have been placed on the same shelf with those well-known abstruse and ingenious investigations relative to the motion of projectiles in vacuo.

Having found out that the cycloidal pendulum would not do, we immediately turn to our old contrivance, based upon what ought now to be admitted as an axiom, namely, that all things which are very little are equal to each other, and that there is no difference to speak of between any of them. Upon the strength of this reasoning we invest the pendulum oscillating in a circular arc with all the properties of the cycloidal pendulum, upon the understanding that the arcs of

vibration are to be very small. That we are justified in doing this is supposed to be proved as follows:—Let U V W, Fig. 3356, be the cycloid in which a body is supposed to oscillate, V N = N A, A U = A W = A V = ½ U V W. The accelerating force in any point T of the curve has the same effect as if the body were placed upon the tangent T t; therefore the force of gravity is to the force in the direction T t as T t : T G, or by similar triangles as Q V : Q H, the tangent being parallel to the chord; or again, by similar triangles, as V N : V Q. In like manner, taking any other point S in the curve, the force of gravity is to the force in the curve as

3356.

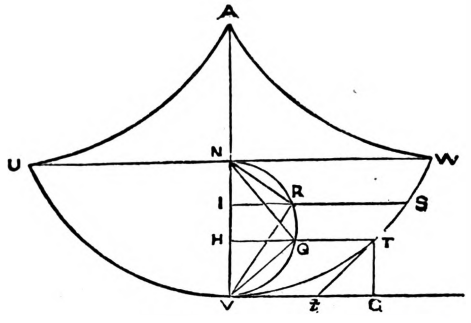

3357.

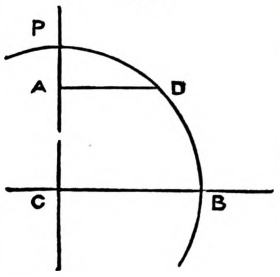

V R : V I or V N : V R. Therefore the accelerative force at different points T . S of the curve varies as the corresponding chords V Q . V R of the generating circle, or as the portions V T . V S of the curve measuring from the vertex, such portions of the curve being respectively double the corresponding chords. Therefore a body moving in a cycloidal arc is attracted by a force which varies directly as its distance from the lowest point V. We have therefore now to find expressions for the velocity and time under these circumstances. Let P, Fig. 3357, be the point from which a particle of matter commences its motion; take P C = a, its distance from the centre of force; let v = the velocity at any variable distance, A C = s, and take f to represent the force at some given distance l from C, compared with a unit of force which we will represent by m. As the intensity of the attractive force is directly proportional to the distance from the centre of force, $l : s :: f : \frac{fs}{l}$; therefore $\frac{fs}{l}$ is an expression for the force at the variable distance s compared with unity, and $\frac{m.f.s}{l}$ when measured by m. Substituting this value for f in the equation $v.dv = f.ds$, we have $v.dv = \frac{mf}{l} s.ds$; or, since v increases as s diminishes, $v.dv = -\frac{mf}{l} s.ds$. Integrating, $v^2 = -\frac{mf}{l} s^2 + C$. When $v = 0$, $s = a$; $0 = -\frac{mf}{l} s^2 + C$; $C = \frac{mf}{l} a^2$. The corrected integral is therefore $v^2 = \frac{m.f}{l} \{a^2 - s^2\}$, $v = \sqrt{\left\{\frac{mf}{l}(a^2 - s^2)\right\}}$. In the quadrant P D B described from centre C with radius C P, the ordinate A D = $\sqrt{(C P^2 - C A^2)} = \sqrt{(a^2 - s^2)}$; therefore $v = A D \sqrt{\frac{mf}{l}}$, from which we deduce the following;—The velocity corresponding to any space P A is proportional to the sine A D of the arc answering to the versed sine P A to radius C P.

To find an expression for the time.—Taking the expression $ds = v.dt$, which, as the velocity increases as the space diminishes, becomes $-ds = v.dt$, $-\frac{ds}{v} = dt = \sqrt{\frac{l}{m.f}} \frac{-ds}{\sqrt{(a^2 - s^2)}}$.

Take z to represent the arc P D,

$$\sin. z : R :: d.\cos. z : dz, \qquad \frac{-ds}{\sqrt{(a^2 - s^2)}} = \frac{dz}{a}$$
$$\sqrt{(a^2 - s^2)} : a :: -ds : dz.$$

Therefore $dt = \frac{dz}{a} \cdot \sqrt{\frac{l}{m.f}}$. Integrating, $t = \frac{z}{a} \sqrt{\frac{l}{m.f}} = \frac{PD}{PC} \sqrt{\frac{l}{m.f}}$; for when $t = 0, z = 0$; when A C = 0, $t = \frac{PDB}{PC} \sqrt{\frac{l}{m.f}} = \frac{1}{2}\pi \sqrt{\frac{l}{m.f}}$. This is therefore an expression for the time in a semi-cycloidal arc, and $\pi \sqrt{\frac{l}{m.f}}$ for the full arc of vibration. l being the length of the semi-arc of vibration, and consequently the length of the pendulum; f being the representative of the force at a given distance l from the centre of force, and m being the representative of the unit of force, $\sqrt{\frac{l}{m.f}}$ is assumed as constant, the coefficient $\frac{1}{2}\pi$ is also constant; therefore t is constant for all the variable arcs represented by s. And this is supposed to prove the isochronism of vibration in the curve. mf expresses the intensity of force at the vertical point of the curve, which causes the pendulum to descend along the curve estimated at a distance from the centre of force = l, the length of the line of descent; but when referred to the descent through the length of the pendulum

from the point of vibration to the vertex, we must call it $2f$, according to the conventional rule, therefore the time of vibration $= \pi \frac{l}{2f}$.

We shall now find an expression for the time in the arc of vibration of the circular pendulum, in order to compare it with the expression first found, and thus ascertain the limit of the error involved in substituting the circular for the cycloidal pendulum. But we are sorry to say that $m.f$ will turn out to be our old friend g in a perfectly new disguise, for there is something mean in his insinuating himself into an experiment intended to test his own value.

3358.

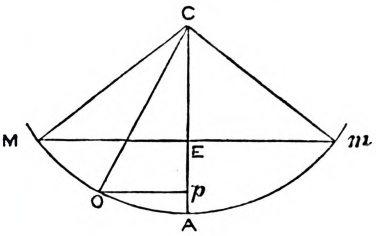

Let M A m, Fig. 3358, be the circular arc in which a pendulum oscillates. Take the radius or length of the pendulum C M $= l$, A E $= b$, A $p = x$, $p.o = y$, and the variable arc $= s$. The velocity acquired by falling through the arc M o is equal to the velocity due to the vertical distance E p. Taking the equation $2fs = v^2$, we have $\sqrt{(2f.s)} = v$. Substituting E $p = (b - x)$ for s, $\sqrt{\{2f(b-x)\}} = v$; but $ds = v.dt$, $\frac{ds}{v} = dt$. Substituting value for v, $\frac{ds}{\sqrt{\{2f(b-x)\}}} = dt$.

The differential of an arc of a curve considered as a function of the ordinates of its extremities is expressed by $ds = \sqrt{(dy^2 + dx^2)}$; in the present case $y = (2lx - x^2)^{\frac{1}{2}}$,

$$dy = \tfrac{1}{2}(2lx - x^2)^{-\frac{1}{2}}.d(2lx - x^2),\ d(2lx - x^2) = 2l.dx - 2x\,dx = (l - x)\,2\,dx$$

$$dy = \tfrac{1}{2}(2lx - x^2)^{-\frac{1}{2}}(l - x)\,2\,dx = \frac{(l-x)\,dx}{\sqrt{(2lx - x^2)}},\ dy^2 = \frac{(l-x)^2.dx^2}{(2lx - x^2)},$$

$$y^2 + dx^2 = \frac{(l-x)^2\,dx^2}{(2lx - x^2)} + dx^2 = \frac{(l-x)^2 + (2lx - x^2)}{(2lx - x^2)}dx^2 = \frac{l^2 - 2lx + x^2 + 2lx - x^2}{(2lx - x^2)}dx^2$$

$$= \frac{l^2.dx^2}{(2lx - x^2)},\ \sqrt{(dy^2 + dx^2)} = \frac{l.dx}{\sqrt{(2lx - x^2)}},\ ds = \frac{l.dx}{\sqrt{(2lx - x^2)}};$$

and because s diminishes as the time augments, $ds = \frac{-l\,dx}{\sqrt{(2lx - x^2)}}$. Substituting this value in the equation $\frac{ds}{\sqrt{2f(b-x)}} = dt$, $\frac{-l.dx}{\sqrt{\{(2lx - x^2).2f(b-x)\}}} = dt$. In order to obtain an expression for the time it only remains to integrate the first term of the above equation,

$$\frac{-l.dx}{\sqrt{2f(b-x).(2lx - x^2)}},\ (b-x)x = b.x - x^2,\ \frac{2lx - x^2}{x} = 2l - x.$$

Therefore the expression becomes

$$\frac{l}{\sqrt{2f}}\frac{-dx}{\sqrt{(bx - x^2)(2l - x)}} = \frac{l}{\sqrt{2f}}\frac{-dx}{\sqrt{(bx - x^2)}}(2l - x)^{-\frac{1}{2}},$$

$$(2l - x)^{-\frac{1}{2}} = 2l^{-\frac{1}{2}}\left(1 - \frac{x}{2l}\right)^{-\frac{1}{2}} = 2l^{-\frac{1}{2}}\left\{1 + \frac{1}{2}\frac{x}{2l} + \frac{1.3}{2.4}\frac{x^2}{4l^2} + \frac{1.3.5}{2.4.6}\frac{x^3}{8l^3}\cdots\right\},$$

$$\frac{-l.dx}{\sqrt{2f(b-x).(2lx - x^2)}} = \frac{1}{2}\sqrt{\frac{l}{2f}}\cdot\frac{-dx}{\sqrt{(bx - x^2)}}\left\{1 + \frac{1}{2}\frac{x}{2l} + \frac{1.3}{2.4}\cdot\frac{x^2}{4l^2}\cdots\right\}.$$

The question therefore resolves itself into the integration of a series of terms of the form $\frac{x^n.dx}{\sqrt{(bx - x^2)}}$, which, taking $b = 2a$, becomes $\frac{x^n.dx}{\sqrt{(2ax - x^2)}}$.

$$\int\frac{dx}{\sqrt{(2ax - x^2)}} = \frac{1}{a}.\text{versin.}^{-1}x \text{ to radius } a.$$

$$\int\frac{x.dx}{\sqrt{(2ax - x^2)}} = \int\frac{a.dx - x\,dx}{\sqrt{(2ax - x^2)}} + a\int\frac{dx}{\sqrt{(2ax - x^2)}} = \sqrt{(2ax - x^2)} + a\int\frac{dx}{\sqrt{(2ax - x^2)}},$$

$$\int\frac{x^2\,dx}{\sqrt{(2ax - x^2)}} = \int x^{\frac{3}{2}}(2a - x)^{-\frac{1}{2}}\,dx = 2x^{\frac{3}{2}}.\sqrt{(2a - x)} + 3\int x^{\frac{1}{2}}.\sqrt{(2a - x)}\,dx,$$

but $x^{\frac{1}{2}}\sqrt{(2a - x)}\,dx$.

Multiply and divide by $x^{\frac{1}{2}}(2a - x)^{\frac{1}{2}} = \frac{2.a.x.dx}{\sqrt{(2ax - x^2)}} - \frac{x^2\,dx}{\sqrt{(2ax - x^2)}}$,

$$\int \frac{x^2.dx}{\sqrt{(2ax-x^2)}} = 2x(2ax-x^2) + 3.2.a\int \frac{x\,dx}{\sqrt{(2ax-x^2)}} - 3\int \frac{x^2.dx}{\sqrt{(2ax-x^2)}},$$

$$4\int \frac{x^2\,dx}{\sqrt{(2ax-x^2)}} = 2x(2ax-x^2) + 3.2.a\int \frac{x.dx}{\sqrt{(2ax-x^2)}},$$

$$\int \frac{x^2\,dx}{\sqrt{(2ax-x^2)}} = \tfrac{1}{2}x(2ax-x^2) + \frac{3.2.a}{4}\int \frac{x\,dx}{\sqrt{(2ax-x^2)}},$$

$$\int \frac{x^3.dx}{\sqrt{(2ax-x^2)}} = \int x^{\frac{5}{2}}.(2a-x)^{-\frac{1}{2}}.dx = 2x^{\frac{5}{2}}\sqrt{(2a-x)} + 5\int x^{\frac{3}{2}}\sqrt{(2a-x)}\,dx,$$

but $x^{\frac{3}{2}}\sqrt{(2a-x)}\,dx.$

Multiply and divide by $x^{\frac{1}{2}}\sqrt{(2a-x)} = \dfrac{2ax^2.dx}{\sqrt{(2ax-x^2)}} - \dfrac{x^3\,dx}{\sqrt{(2ax-x^2)}},$

$$\int \frac{x^3\,dx}{\sqrt{(2ax-x^2)}} = 2x^2\sqrt{(2ax-x^2)} + 5.2.a\int \frac{x^2.dx}{\sqrt{(2ax-x^2)}} - 5\int \frac{x^3.dx}{\sqrt{(2ax-x^2)}},$$

$$6\int \frac{x^3.dx}{\sqrt{(2ax-x^2)}} = 2x^2\sqrt{(2ax-x^2)} + 5.2.a\int \frac{x^2.dx}{\sqrt{(2ax-x^2)}},$$

$$\int \frac{x^3.dx}{\sqrt{(2ax-x^2)}} = \tfrac{1}{3}x^2\sqrt{(2ax-x^2)} + \frac{5.2.a}{6}\int \frac{x^2.dx}{\sqrt{(2ax-x^2)}}$$

We find therefore that

$$\int \frac{dx}{\sqrt{(2ax-x^2)}} = \frac{1}{a}.\text{versin.}^{-1}x \text{ to radius } a, \qquad \int \frac{x\,dx}{\sqrt{(2ax-x^2)}} = \sqrt{(2ax-x^2)} + a\int \frac{dx}{\sqrt{(2ax-x^2)}},$$

$$\int \frac{x^2\,dx}{\sqrt{(2ax-x^2)}} = \tfrac{1}{2}x(2ax-x^2) + \frac{3.2.a}{4}\int \frac{x.dx}{\sqrt{(2ax-x^2)}},$$

$$\int \frac{x^3.dx}{\sqrt{(2ax-x^2)}} = \tfrac{1}{3}x^2\sqrt{(2ax-x^2)} + \frac{5.2.a}{6}\int \frac{x^2\,dx}{\sqrt{(2ax-x^2)}}.$$

This will be sufficient to show the law of the series, and substituting b for $2a$, we have

$$\int \frac{dx}{\sqrt{(bx-x^2)}} = \frac{2}{b}\text{ versin.}^{-1}x \text{ to radius } \frac{b}{2}, \qquad \int \frac{x\,dx}{\sqrt{(bx-x^2)}} = \sqrt{(bx-x^2)} + \frac{b}{2}\int \frac{dx}{\sqrt{(bx-x^2)}},$$

$$\int \frac{x^2\,dx}{\sqrt{(bx-x^2)}} = \tfrac{1}{2}x(bx-x^2) + \frac{3.b}{4}\int \frac{x\,dx}{\sqrt{(bx-x^2)}},$$

$$\int \frac{x^3\,dx}{\sqrt{(bx-x^2)}} = \tfrac{1}{3}x^2\sqrt{(bx-x^2)} + \frac{5.b}{6}\int \frac{x^2\,dx}{\sqrt{(bx-x^2)}}.$$

It will be evident that at the commencement of the arc of vibration the time must equal 0, therefore when $x = b$, $\int \dfrac{dx}{\sqrt{(bx-x^2)}} = \pi$, for R − cos. = versin., cos. 180° = − 1.

$$\begin{array}{rcl} \text{R} & = & 1 \\ \text{cos. } 180 & = & -1 \\ \hline & & 2 = \text{versin. } 180^\circ. \end{array}$$

$$\frac{2}{b}\text{ versin.}^{-1}b \text{ to radius } \frac{b}{2} = \pi,$$

$$\int \frac{x\,dx}{\sqrt{(bx-x^2)}} = \frac{1.b}{2}\pi, \qquad \int \frac{x^2\,dx}{\sqrt{(bx-x^2)}} = \frac{1.3.b^2}{2.4}\pi, \qquad \int \frac{x^3\,dx}{\sqrt{(bx-x^2)}} = \frac{1.3.5b^3}{2.4.6}\pi.$$

It will be evident that when $x = b$ all terms containing $(bx - x^2)$ as a factor vanish.

It will therefore be evident that integrating between $x = b$ and $x = 0$, and substituting the values of the above integrals in the series, $\frac{1}{2}\sqrt{\frac{l}{2f}}\frac{-dx}{\sqrt{(bx-x^2)}}\left\{1+\frac{1}{2}\frac{x}{2l}+\frac{1.3}{2.4}\cdot\frac{x^2}{4l^2}\cdots\right\}$, we get $t=\frac{1}{2}\pi\sqrt{\frac{l}{2f}}\left\{1+\frac{1^2}{2^2}\cdot\frac{b}{2l}+\frac{1^2.3^2}{2^2.4^2}\cdot\frac{b^2}{4l^2}+\frac{1^2.3^2.5^2}{2^2.4^2.6^2}\cdot\frac{b^3}{8l^3}\cdots\right\}$. This expresses the time of descent through half the arc of vibration, but with the velocity acquired during the descent the pendulum would proceed along an equal branch of the curve, its velocity being supposed to be extinguished after a lapse of time equal to the time of descent; therefore the time of a complete vibration will be expressed by $t=\pi\sqrt{\frac{l}{2f}}\left\{1+\frac{1^2}{2^2}\cdot\frac{b}{2l}+\frac{1^2.3^2}{2^2.4^2}\frac{b^2}{4l^2}+\frac{1^2.3^2.5^2}{2^2.4^2.6^2}\cdot\frac{b^3}{8l^3}\cdots\right\}$. Therefore, upon the supposition that the time of vibration in the cycloidal arc is expressed by $t=\pi.\sqrt{\frac{l}{2f}}$, it will appear that the error incurred by substituting the circular for the cycloidal pendulum is expressed by a series of the powers of the versin. of the same angular value as the arc of vibration, having unity for its radius. It is argued that as the versines of small angles are exceedingly minute, the series will converge rapidly, and the error may be neglected in practice; or at least all the terms but the first or second may be neglected, and corrections applied accordingly. Assuming therefore that the circular pendulum may be substituted for the cycloidal pendulum, without producing sensible error, and taking the equation $\pi^2.a=d$, $3{\cdot}14159^2=\pi^2=9{\cdot}8696$, $9{\cdot}8696\,a=d$. It has been found by experiment that the length of a pendulum vibrating seconds in the latitude of London $=39{\cdot}125$. The length of the cycloidal pendulum is equal to twice the diameter of the generating circle, therefore $39{\cdot}125=2.a$, $19{\cdot}562=a$, $9{\cdot}8696\times19{\cdot}562=193{\cdot}0623$, $193{\cdot}0623$ in. $=16{\cdot}088$ ft. It will therefore be evident that the value given to d, from which the value of g is supposed to be derived, depends upon the length of a pendulum vibrating seconds in a particular latitude, in a circular arc which is assumed to be a cycloidal arc, because it is very small, and this is to be ascertained by experiment. This is the experiment which is generally mysteriously alluded to in the following words;—

"It has been ascertained by accurate experiments with the pendulum and by other means, that in the latitude of London a heavy body falling freely from a state of rest will describe a space of $16\frac{1}{12}$ ft. during the first second of the descent, and will have generated a velocity of $32\frac{1}{6}$ ft. a second," &c., &c.

The method of determining the space descended during one second, said to have been suggested by Galileo by means of experiments with reference to the descent of bodies upon inclined planes, in consequence of the friction on the planes lead to no practically useful results.

The experiments made by means of Atwood's machine, a description of which will be found p. 7, are not sufficiently accurate for practical purposes.

We have gone into detail with reference to the apparent mixture of reasoning and arbitrary assumption upon which the laws of gravity seem to be founded, for it is upon the validity of these laws that the whole theory of gunnery as it now stands depends. If there is a flaw in this line of argument we should fail in arriving at practically useful results, even though we should be successful in determining accurately the law of resistance of the air to a body moving through it, to which point alone attention appears to be at present directed. We shall now exhibit as shortly as possible the most important of the principles which are supposed to constitute the present system of gunnery.

If a body be projected with a given velocity in a given direction from any given point of departure, it is considered that the body, if uninfluenced by any disturbing force, will proceed continually in the given direction with a uniform velocity equal to the initial velocity originally impressed upon it. The velocity being uniform, the spaces described on the line of direction will be proportional to the times. According to the conventional rule, the spaces described by a heavy body subject to the attractive force of gravity upon a line perpendicular to the horizon are proportional to the squares of the times. Admitting the above statements as true, and combining them together, we are in a position to define the curve of trajectory

Amongst the properties of the common parabola we find the following;—1. The ordinates to all diameters are parallel to the tangent at the vertex. 2. The abscisses are proportional to the squares of the semi-ordinates.

If therefore we take P B a diameter of any parabola, of which A, Fig. 3359, is the vertex, A C the axis, F D the directrix, s the focus, $ap^2 : a'p'^2 :: Pa : Pa'$; and completing the parallelograms we have

$$Pm^2 : Pm'^2 :: mp : mp.$$

If therefore we take P m and P m' to represent the spaces which would be described with a uniform velocity on the tangential line during any given times of the transit t and t', mp and $m'p'$ will evidently represent the spaces due to the action of gravity during the same time; therefore p and p' will represent the position of the projectile at the end of the times t and t', and as this will hold good for all distances which may be assumed on the tangential line, we conclude that the trajectory of the projectile, when subject only to the influence of the propelling force and the force of gravity, is the parabolic curve.

3359.

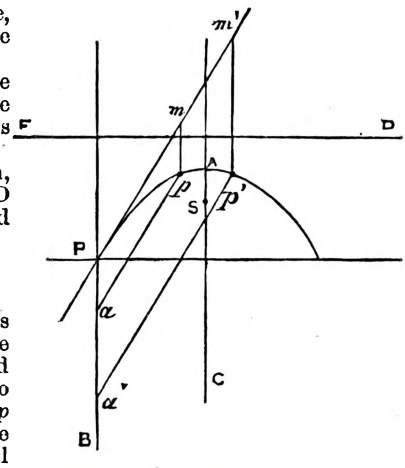

According to the laws of gravity, a body in its descent through any vertical distance will generate a velocity which, acting uniformly, would cause the same body to describe a distance equal to double the space descended in a time equal to the time of descent. The height due to any velocity is therefore taken as the exponent or measure of the initial velocity equal to the velocity generated.

Take the vertical line C P to represent the height due to any given initial velocity. The horizontal line C G, Fig. 3360, through the point C at right angles to the line C P will be the directrix; the semicircle C H B described with radius C P from centre P will be the locus of the foci; and the semi-ellipse C E P upon C P as conjugate axis, and of which the transverse is double the conjugate, the locus of the vertices of all the parabolæ representing the trajectories of a projectile impressed with the given initial velocity at the point P whatever may be the original direction given

3360.

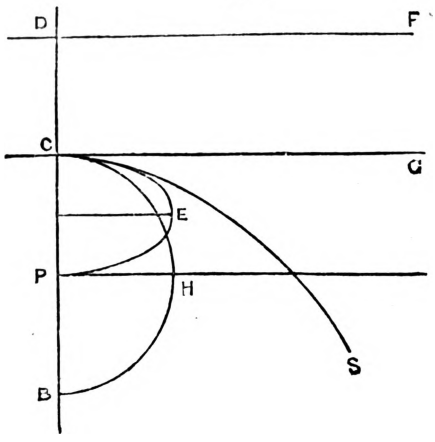

3361.

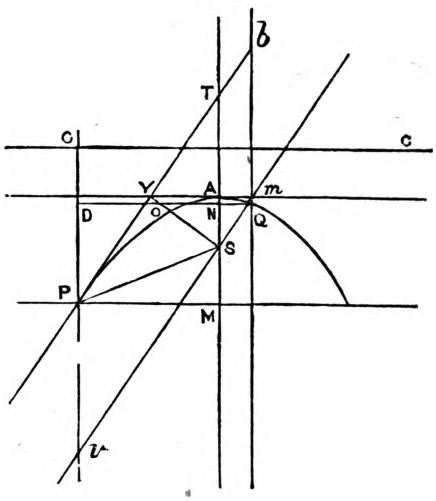

to the projectile. And, lastly, the parabolic curve C S described with focus P, and directrix D F, vertex C, will be the locus of the extremities of the greatest ranges attained with the given initial velocity. These points are proved as follows;—

1. The horizontal line C G through the point C will be the directrix. Take P b, Fig. 3361, to represent the tangential line of direction P v equal to C P, and complete the parallelogram P b. Q v, C P = P v = b Q; therefore P b represents the space described in the tangential direction with a uniform velocity equal the initial velocity impressed in the time during which the initial velocity has been generated by the descent through C P = b Q. Therefore, according to the conventional rule, P b = 2 C P, Q v = 2 P v, Q v^2 = 4 P v^2 = 4 P v . C P, $\frac{Q v^2}{4 P v}$ = C P. Take P A Q to represent the curve of trajectory corresponding to the tangential direction P b, S the focus, A the vertex. Let S Y be a perpendicular to the tangent P b, and join S P. It will be evident that if it can be shown that S P is equal to C P (for which we have already obtained an expression), the proposition will be proved, as the perpendicular from the point P in the curve upon the horizontal line C G will be equal to the distance of the same point P from the focus, which is a property of the parabolic curve.

The tangent at the vertex A is perpendicular to the axis A M, and the perpendicular from the focus S upon the tangent at the point P is a mean proportional between S P and S A; therefore the right-angled triangles S P Y and S A Y are similar.

The right-angled triangles S A Y . S m Y are similar, having a common angle at Y. The right-angled triangles S m Y . S Q O are similar, having a common angle at S. The right-angled triangles S Q O . Q D v are similar, having a common angle at Q; therefore the triangles S P Y and Q D v are similar, and Q v^2 : Q D^2 :: S P^2 : S Y^2; but S Y^2 = S P . S A, ∴ Q v^2 : Q D^2 :: S P : S A.

The right-angled triangles Q D v and P M T are similar, the opposite angles v and T in the parallelogram P v T S being equal, therefore

$$\begin{aligned} Q D : D v &:: P M : M T \\ &:: P M^2 : P M . M T. \end{aligned}$$

Substituting 4 A S . A M for P M^2, and 2 A M for M T, we have

$$\begin{aligned} Q D : D v &:: 4 A S . A M : P M . 2 A M \\ &:: 4 A S : 2 P M; \end{aligned}$$

therefore 4 A S . D v = 2 P M . Q D, P M^2 = 4 A S . A M, Q N^2 = 4 A S . A N.

$$P M^2 - Q N^2 = 4 A S . A M - 4 A S . A N = 4 A S (A M - A N) = 4 A S . M N = 4 A S . D P,$$

$$P M^2 - Q N^2 = (P M + Q N)(P M - Q N), \text{ but } P M + Q N = Q D;$$

$$\therefore P M^2 - Q N^2 = (P M - Q N) Q D.$$

$$4 A S . D P = P M^2 - Q N^2 = (P M - Q N) Q D, \quad 4 A S . D P = (P M - Q N) Q D.$$

Subtracting this equation from the equation $4AS.Dv = 2PM.QD$,

$$\begin{array}{l} 4AS.Dv = 2PM.QD \\ 4AS.DP = (PM - QN)QD \\ \hline 4AS.Pv = (PM + QN)QD = QD^2 \\ 4AS.Pv = QD^2. \end{array}$$

Substituting this value for QD^2 in the proportion $Qv^2 : QD^2 :: SP : SA$, we have

$$Qv^2 : 4AS.Pv :: SP : AS,\ Qv^2 = 4SP.Pv,\ \frac{Qv^2}{4Pv} = SP,\ CP = \frac{Qv^2}{4Pv} = PS;$$

therefore $CP = SP$, and consequently the line CG is the directrix of the parabola; and as this will hold good whatever direction the tangential line Pb may take, the proposition is proved.

2. The semicircle CHB described with radius CB from centre P will be the locus of the foci. This follows as a corollary to the former proposition; for the foci being always at a distance from the point P in the curve equal to the perpendicular upon the directrix from the same point, the foci must necessarily lie in the periphery of the semicircle described with P as a centre and CP as radius.

3. The semi-ellipse CEP, Fig. 3362, upon CP as conjugate axis, and of which the transverse is double the conjugate, is the locus of the vertices; bisect CP in I, with I as centre and a distance equal CP as radius describe the semicircle KEL. $m'v : m'n' :: IC : IE :: 1 : 2$, $m'n' = 2m'v$, $\therefore m'v = vn'$, $mn = m'n'$, $mm' = m'b$, $\therefore m'n = bn'$, $m'v - m'n = vn' - bn'$, $nv = vb$; and as CG is the directrix and n the focus, v must evidently be the vertex; and as this will hold good for any other point in the periphery of the semicircle CHB, which may be assumed as the focus of the curve of trajectory, the proposition is proved.

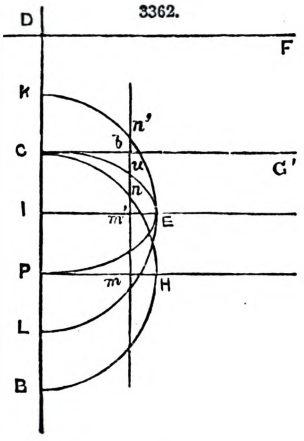

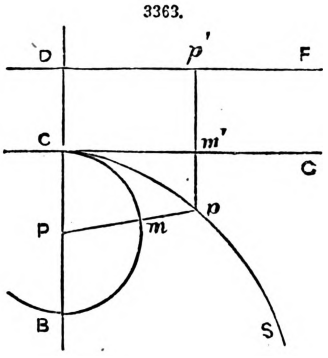

4. The parabolic curve CS, Fig. 3363, described with focus P and directrix DF, vertex C, will be the locus of the extremities of the greatest ranges attained with the given initial velocity.

It has been already shown that the semicircle CmB described with CP as radius and P as centre is the locus of the foci of all the parabolæ representing the trajectory of a projectile discharged from the point P with the initial velocity represented by the descent through CP.

Let m be the focus of any one of these parabolæ; join Pm, and produce the connecting line to meet the parabola CS in p, and draw pp' perpendicular to DF; then, as DF is the directrix and P the focus of the parabola CS, $Pp = pp'$; but $Pm = PC = CD = p'm'$; therefore

$$Pp - pm = pp' - p'm',\quad mp = pm'.$$

Therefore, as it has been shown that CG is the directrix of the parabola of which m is the focus, p must be a point in the curve of that parabola; and since the tangent of such parabola as well as the tangent of the parabola CS at the common point p bisect the same angle Ppp', they must coincide. Consequently the two parabolæ having a common tangent at the point p touch each other at that point; and as this is true for every point in the semicircle CmB, it follows that the curves of all the trajectories of a projectile discharged with the given velocity from the point P will touch the concavity of the parabola CS, and lie wholly within it. No point without the parabola CS can be struck while the initial velocity remains unchanged; for if the elevation be increased, the focus of the parabola which the body would describe will be on the portion Cm of the circumference of the semicircle CmB, and the trajectory will touch the parabola CS in some point between C and p, and being wholly within the parabola CS, it must intersect the line Pp in some point nearer to the initial point P than p. If the elevation be diminished, the curve of trajectory will touch the parabola CS in some point below p, and will therefore intersect Pp in some point nearer to P than p.

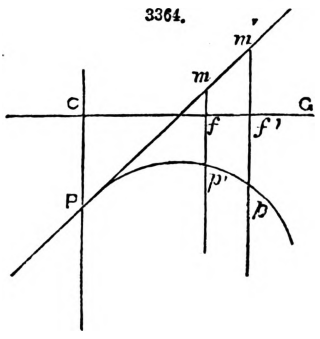

The times of describing any given portions $Pp.pp'$ of the curve are as the corresponding parts $Pm.mm'$, Fig. 3364, of the tangent or the intercepted parts $Cf.ff'$ of the directrix; for according to the original supposition $t.Pp = t.Pm$ and $tpp' = tmm'$; and because the directrix cuts the three parallels $PC.pm.p'm'$, $Pm : mm' :: Cf : ff'$. So far the subject may be most clearly illustrated under the form of geometrical reasoning; but in order to deduce practical formulæ adapted to actual calculation and comparison, we must again avail ourselves of the facilities afforded by the rudimental portion of the differential and integral calculus; for independently of the necessity of constructing algebraical formulæ adapted to practical purposes, a

process of reasoning and a consequent result can be thus exhibited under the form of a few well-known symbols, which would require pages of geometrical reasoning to demonstrate.

Take the parabolic curve A D K, Fig. 3365, of which A K is the base and D B the axis, to represent the trajectory of a shot discharged from the point A with a given initial velocity. Let the ordinate M P be perpendicular to the horizontal base A K, M T a tangent to the curve at the point M. Take M P = y, A P = x, and A the origin of the co-ordinates. From any point R in the ordinate M P draw the perpendicular R S to the tangent M T; draw R T perpendicular to the ordinate to meet the tangent in T, the triangle M T R may be taken to represent the differential triangle. Then the force f in the direction M P is to the effect in the direction R S perpendicular to the tangent as M R : R S; or, by similar triangles, as M T : T R :: $dz : dx$; therefore $\frac{dx}{dz} f$ will express the force in a direction perpendicular to the tangent. Take C M to represent the radius of curvature at the point M, and let C M = r; then, as C M : M T as the differential of the circular arc described with C M as radius is to the differential of the circular arc described with M T as radius, we have $r : dz :: dz : \frac{dz^2}{r}$; but the differential of the arc described with M T as radius may be taken as representing the second differential of the arc described with C M as radius; we may therefore assume $d^2 z = \frac{dz^2}{r}$. Taking the original equations $dv = f\,dt$,

3365.

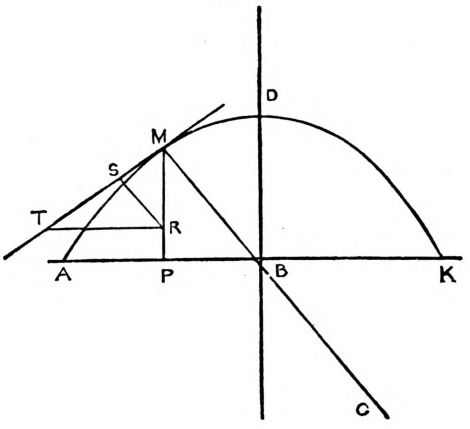

3366.

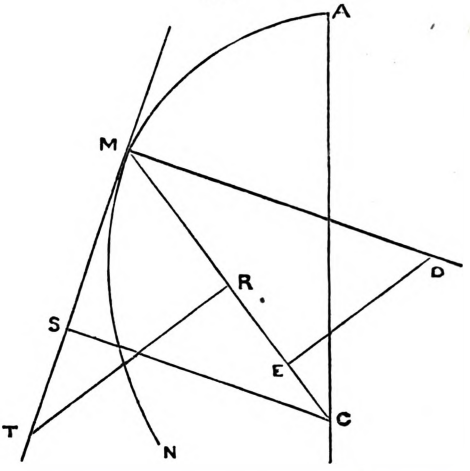

$dz = v\,.\,dt$, differentiating the last expression upon the supposition that dt is constant, we get $d^2 z = dv\,.\,dt$; substituting value for dv, $d^2 z = f\,.\,dt^2$, and substituting value for f, so as to render the expression applicable to the present case, $d^2 z = \frac{dx}{dz} f\,dt^2$, $\frac{dx}{dz} f\,dt^2 = d^2 z = \frac{dz^2}{r}$, $dx f\,dt^2 = \frac{dz}{r}$, $dz = v\,dt$, $dz^2 = v^2\,dt^2$; therefore $f\,dx\,r = v^2\,dz$. We shall now find a value for r applicable to the present case. Take D M = r the radius of curvature at the point M of the curve A M N, Fig. 3366, M T the tangent at the same point, C M the radius vector = y, C S a perpendicular upon the tangent from the centre C = S; the lines s and r will evidently remain parallel for every point in the curve. Take dz to represent the differential of the circular arc described with radius r, and ds the differential of the circular arc described with radius M S; D M : M S :: $dz : ds$. Take M T R to represent the differential triangle, M S : M C :: M R : M T. Therefore we have r : M S :: $dz : ds$, M S : y :: $dy : dz$. Compounding, $r : y :: dy : ds$, $r\,.\,ds = y\,.\,dy$, $\frac{r}{dy} = \frac{y}{ds}$; T M : T R :: C M : C S, $dz : dx :: y : s$, $dz\,.\,s = dx\,.\,y$. Considering the lines of attraction parallel is equivalent to considering the centre of force C removed to an infinite distance, and consequently the radii vectors represented by y infinite, and consequently constant upon the supposition that the velocity in the direction of the curve is uniformly variable, and consequently dz proportional to the equal increments of time, dz may also be taken as constant. Differentiating under these conditions, we have $dz\,.\,ds = d^2 x\,y$, $\frac{dz}{d^2 x} = \frac{y}{ds}$, $\frac{r}{dy} = \frac{y}{ds} = \frac{dz}{d^2 x}$, $r = \frac{dy\,.\,dz}{d^2 x}$. Therefore the equation $f\,dx\,r = v^2\,.\,dz$ becomes $f\,dx\,\frac{dy\,.\,dz}{d^2 x} = v^2\,.\,dz$, $f\,.\,dx\,.\,dy = v^2\,d^2 x$. Comparing this with the equation $-f\,dy = v\,.\,dv$ already established, and eliminating f, we get $\frac{v^2\,.\,d^2 x}{dx\,.\,dy} = f = -\frac{v\,.\,dv}{dy}$, $v\,.\,d^2 x = -dv\,.\,dx$, $v\,.\,d^2 x + dv\,.\,dx = 0$. Integrating, $v\,.\,dx = C$, which we may put in the form $v\,.\,dx = A\,.\,dz$, dz having been treated as a constant during the investigation.

If we take w to represent the angle at the origin when the co-ordinates are rectangular, we evidently have the following proportion, cos. w : 1 :: $dx : dz$, cos. $w\,.\,dz = dx$. Taking c to represent the initial velocity, $c\,.\,\cos.\,w\,.\,dz = C$, $v\,.\,dx = c\,.\,\cos.\,w\,.\,dz$. Comparing this with

$dx = v.dt$, we get $dx = c.\cos.w.dt$; and integrating, $x = c.\cos.w.t$, $\frac{x}{c.\cos.w} = t$. Take $\sin.w = a$, $\cos.w = b$, $\frac{x}{c.b} = t$, $\frac{x^2}{c^2.b^2} = t^2$.

Produce the ordinate M P, Fig. 3367, to meet the tangent A E in E. E M will evidently represent the descent due to the attraction during the transit of a projectile discharged from the initial point A along the tangential line A E to the point E.

3367.

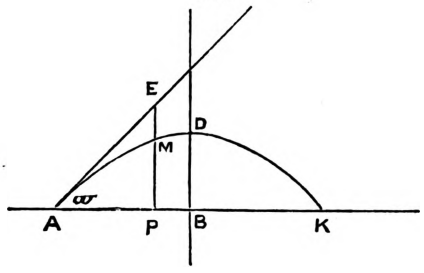

In finding an expression for M P = y in terms of A P = x and known quantities, we might have some difficulty in reducing our formulæ to manageable dimensions; but our familiar spirit g comes to our assistance in his character of $2.d$, assuming for the time the title of his progenitor, and all the difficulties at once disappear, for according to the conventional rules $2fs = v^2$; and taking d to represent the descent during the first second, $2d$ not only represents the generated velocity at the end of the first second, but also upon all other occasions the quantity indicated by f. Substituting $2d$ for f, $2.2.d.s = v^2$, $4ds = v^2$. Taking l to represent the height due to the initial velocity c, we get $4.d.l = c^2$.

If we take t to represent the time of the transit from A to E and the contemporaneous descent through E M, and referring to the law that "the spaces are as the squares of the times,"

$$1 : t^2 :: d : \text{E M}.$$

Substituting value for t^2, $1 : \frac{x^2}{c^2.b^2} :: d : \text{E M}$, $\frac{d.x^2}{c^2.b^2} = \text{E M}$; $b : a :: x : \text{E P}$, $\frac{ax}{b} = \text{E P}$;

$$\{\text{E P} - \text{E M}\} = \text{M P} = y = \frac{ax}{b} - \frac{dx^2}{c^2.b^2}.$$

Substituting value for c^2, $y = \frac{a.x}{b} - \frac{x^2}{4l.b^2}$. It will be evident that when y becomes 0, x will represent the horizontal range, and $\frac{ax}{b} = \frac{x^2}{4l.b^2}$, $4abl = x$.

To find the value of x corresponding to the maximum value of y, or highest point of the trajectory, we must evidently make $dy = 0$, $0 = \frac{adx}{b} - \frac{2xdx}{4lb^2}$, $\frac{adx}{b} = \frac{2x.dx}{4lb^2}$, $2a.b.l = x$; x is therefore in this case equal to half the range. Substituting this value for x in the equation $y = \frac{ax}{b} - \frac{x^2}{4lb^2}$, we get $\text{D B} = \frac{2a^2bl}{b} - \frac{4a^2b^2l^2}{4l.b^2} = 2a^2l - a^2l = a^2l$. This is therefore the value for the ordinate of the highest point of the trajectory. As $\sin.2.w = 2.a.b$, and as $2l$ represents the initial velocity, and $4a.b.l = 2ab.2l$ represents the range, it will be evident that the horizontal ranges with the same projectile velocity are as the sines of an angle equal to twice the angle of elevation. The horizontal range will be greatest with a given projectile force when the angle of elevation is 45°; for in this case $a = b$, and their product in the equation $4a.b.l = x$ will be a maximum. Also all ranges obtained at elevations at equal angles above or below 45° are equal; for the sine in one case becomes the cosine in the other, and *vice versâ*. Oblique ranges (that is, when the object is above or below the level of the battery) may be obtained as follows;—

Take t to represent the tangent and s the secant of the angle of elevation, t' the tangent of the angle of elevation or depression of the object above or below the level of the battery,

$$1 : t' :: x : y = t'.x.$$

Giving this value to y in the equation $y = \frac{ax}{b} - \frac{x^2}{4l.b^2}$, we get

$$\pm t'x = \frac{ax}{b} - \frac{x^2}{4l.b^2}, \quad \pm t' = \frac{a}{b} - \frac{x}{4l.b^2} = \frac{a}{b} - \frac{1}{b^2}\frac{x}{4l},$$

$$\frac{a}{b} = t, \quad \frac{1}{b^2} = s^2, \quad \pm t' = t - s^2\frac{x}{4l}, \quad s^2\frac{x}{4l} = t \mp t', \quad x = \{t \mp t'\}\frac{4l}{s^2}.$$

This has all come out very smoothly and easily, thanks to the kind assistance of our unalterable friend g; and it would be quite satisfactory, but provokingly enough the shot and shells will not conform to the theory; on the contrary, when they ought to go about twenty miles they collapse, and come to a stop at about a tenth of the distance. This is, to say the least of it, very annoying, after all the trouble we have had in deducing the formulæ. We try to comfort ourselves by saying it is all in the air, and if there was no atmosphere it would be all right. But no one who has ever thrown a stone or shot with a bow and arrow can look at the last figure, or consider the calculation showing that the highest point of the trajectory is over the centre point of the range, without the conviction forcing itself upon him that whatever the curve of the trajectory may be, that is not it.

It is true that we do not as a rule throw stones or practise archery in vacuo; but there is an instinct more reliable than abstract reasoning which tells us that, even leaving out the consideration of the resistance of the air, the true curve should bear a greater analogy to the observable trajectory in nature than the one exhibited to us under the influence of g, who, like all familiar spirits, has the power of making all things easy and pleasant for the present, but can only bring us to infinite trouble and error at the end. This is the theory of the trajectory of projectiles in vacuo, founded upon the laws of gravity, which has been so long received with implicit faith, and only considered inapplicable in practice because the true correction for the resistance of the air has not as yet been discovered.

We shall now consider the theory proposed with reference to the resistance of the air, and in the first place we shall say a few words on the subject of what is commonly called terminal velocity. Upon the supposition that g (the force of gravity, as it is called) remains constant and never changes during the descent of a falling body, although the force of resistance is supposed to augment by successive increments at the end of equal intervals of time, it is assumed that if the descent is continued long enough there must arrive a period at which the aggregate of all the increments of resistance shall equal the force of gravity or g. But it is also supposed that the velocity has gone on constantly increasing during the descent; therefore it is again assumed that at the moment the force of gravity is neutralized by the generated resistance, the greatest velocity attainable by the falling body must have been reached. It is then generally stated that from that moment the body will continue to descend with a uniform velocity equal to the velocity attained. But this is difficult to understand, for the supposition seems to be that at some particular moment of the descent the constantly accumulating force of resistance has reached a degree of intensity which will compensate the impulse of attraction received by the falling body at that moment.

It would therefore seem that there was no further cause for the descent; for, according to the original supposition, in order to receive another impulse of attraction the body should descend during another second of time. But even supposing the possibility of the descent during the succeeding second, the body would then only descend with a constantly augmenting velocity till the impulsive force was again compensated by the resistance. But in order to support the supposition that the velocity is a constantly augmenting velocity, we must also suppose that the successive increments of velocity exceed the corresponding increments of resistance, otherwise it would be either a uniform velocity or else a constantly diminishing velocity. But, on the other hand, unless we suppose that the increments of resistance successively exceed the corresponding increments of velocity, we cannot establish our right to suppose that a period of the descent must arrive when the aggregate of the differences of the increments shall compensate the original balance to the credit of the velocity represented by g. But the whole matter has been rendered so intricate by the anomalous assumption that the velocity increases while the force of which it is the exponent remains constant, that it is impossible to deal with it according to the usual course of argument; and as our present object is simply to exhibit the theory with relation to the correction to be applied for the resistance of the air as it stands at present, we must only assume the generally-received supposition that when the resistance has become equal to the force of gravity (g) the falling body will have attained its greatest velocity, merely remarking, as we pass on, that we have arrived at this conclusion by supposing an absurdity

Take R to represent the resistance; then, according to the generally-received doctrine, when a falling body has attained its greatest velocity in a resisting medium $R = g$. Referring to the equations $dv = f.dt$; $ds = v.dt$; $\frac{dv}{f} = dt = \frac{ds}{v}$; $f.ds = v.dv$. Integrating upon the supposition that f is constant, $2.s.f = v^2$. f is in this case a constant quantity and is expressed by g. Taking r to represent $2s$ and substituting, we ha $rg = v^2$; $g = \frac{v^2}{r}$; $R = g = \frac{v^2}{r}$.

We have thus obtained an expression for the resistance in terms of the velocity and the space through which the body has descended in generating the greatest velocity attainable in the medium through which it moves. But it will be observed that this expression has been obtained by the adoption of the conventional rules, that in the first place f is invariable, and in the second that during the descent the spaces are proportional to the squares of the velocities. It is generally supposed that during the movement of a body through a resisting medium, the resistance acts only on the line of motion, any lateral pressure or action being compensated or neutralized by a corresponding action in the contrary direction. Assuming this supposition to be correct, we shall have only to consider the action of the resisting force on the line of direction of the moving body.

Take the ordinates of the curve A M, Fig. 3368, to represent the successive measures of the motive force, while the corresponding ordinates of another curve A N represent the successive measures of the force of resistance, the abscissa A P expressing the time from the commencement of the motion. It will be evident that the area A M P expresses the sum of all the motive forces during the time represented by the abscissa A P; also that the area A N P expresses the sum of all the forces of resistance from the beginning of the motion during the same time. It follows that the difference represented by the area A M N will express the intensity of the force which generates the actual velocity of a body moving in a resisting medium.

Take y to represent the variable ordinate of the curve A M and y' the ordinate of the curve A N, x the abscissa, a the area enclosed by the curve and ordinates $x.y$, and a' the area enclosed by the curve and ordinates $x'.y'$. Taking the common expression for the differential of an area bounded by a curve related to rectangular co-ordinates,

$$da = y.dx, \quad da' = y'.dx, \quad da - da' = \{y - y'\}.dx$$

Consequently the differential of the velocity of a body moving through a resisting medium is equal to the product of the difference of the measure of the motive force and the resistance, and the differential of the time elapsed, $dv = \{f - R\}.dt$.

Take C, Fig. 3369, the centre of force; C M = y, the radius vector; C S = s, a perpendicular from the centre upon the tangent at any point M of the curve A M; T M R, the differential triangle, whose sides may be considered as small as we please. The force in the direction C M is to the force in the direction of the tangent as C M : M S. But T M : M R :: C M : M S, $dz : dy :: f : \frac{dy}{dz} f$; therefore $\frac{dy}{dz} . f$ expresses the force in the direction of the tangent. Substituting this value for f in the equation

3368.

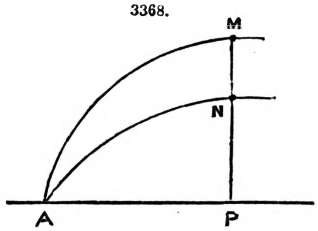

3369.

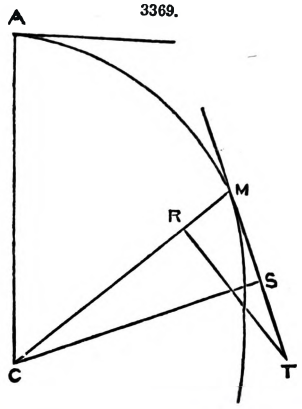

$$dv = \{f - R\} . dt,$$

we get $dv = \left\{\frac{dy}{dz} f - R\right\} . dt$; but $dz = v . dt$; $\frac{dz}{v} = dt$. Substituting this value for dt, $v . dv = dy . f - R . dz$. We shall now apply this formula to the descent of a falling body. It will be evident that in this case $z = y$, and it has been shown that $R = \frac{v^2}{r} = f$. We shall also, in order to simplify the calculation, take f equal to unity; g in this case representing f. Therefore $\frac{v^2}{r} = g = 1$; $r = v^2$. Making these substitutions, the expression $v . dv = dy . f - R . dz$ becomes $v . dv = dy - \frac{v^2}{r} dy = \frac{r - v^2}{r} dy$; $\frac{r . v . dv}{r - v^2} = dy$. Therefore $y = \int \frac{r . v . dv}{r - v^2} = -\frac{1}{2} r \log . (r - v^2) + C$. But when $y = 0$, $v = 0$; therefore $C = \frac{1}{2} r \log . r$, and the corrected integral is

$$y = -\frac{1}{2} r \log . (r - v^2) + \frac{1}{2} r \log . r = \frac{1}{2} r \log . \frac{r}{r - v^2} ; \quad \frac{2y}{r} = \log . \frac{r}{r - v^2} .$$

Take q to represent the number whose log. is $\frac{2y}{r}$,

$$q = \frac{r}{r - v^2} ; \quad q . r - q . v^2 = r ; \quad r - v^2 = \frac{r}{q} ; \quad r - \frac{r}{q} = v^2 ; \quad (q - 1) \frac{r}{q} = v^2 ; \quad \sqrt{\left\{(q - 1) \frac{r}{q}\right\}} = v.$$

We have thus obtained the value of v in terms of y and r.

Taking the equation $dz = v . dt$, and substituting dy for dz, we get $dy = v . dt$; but $dy = \frac{r . v . dv}{r - v^2}$; $v . dt = dy = \frac{r . v . dv}{r - v^2}$; $dt = \frac{r . dv}{r - v^2}$; $t = \int \frac{r . dv}{r - v^2}$. We have taken g equal to unity, and it has been already shown that under this supposition $r = v^2$. When v is the greatest velocity attainable, take a to represent this velocity, which must evidently be represented by a constant quantity $r = a^2$. Substituting this value, the equation $dt = \frac{r . dv}{r - v^2}$ becomes $dt = \frac{a^2 dv}{a^2 - v^2}$;

$$t = a^2 \int \frac{dv}{a^2 - v^2} = a^2 \frac{1}{2} a \log . C \frac{a + v}{a - v} = \frac{1}{2} a \log . C \frac{a + v}{a - v} = \frac{1}{2} a \left\{\log . C + \log . \frac{a + v}{a - v}\right\}.$$

When $t = 0$, $v = 0$; therefore $\log . \frac{a + v}{a - v} = \log . 1 = 0$; therefore $\log . C = 0$, and the corrected integral is $t = \frac{1}{2} a \log . \frac{a + v}{a - v}$.

We have thus obtained the time of descent of a falling body through a resisting medium in terms of a and v, which as $r = a^2$ amounts to the same as obtaining it in terms of r and v. v has been already obtained in terms of y and r. y is a known quantity, being the distance descended by the falling body. If therefore we can assign a value to r the problem will be solved and the time of descent known. But here again we are led into the region of conjecture and supposition, and find ourselves still under the influence of g. And therefore however sound or ingenious the reasoning may be, if our faith in g is shaken, or if we are not fully satisfied with the suppositions upon which the premises are founded, we must necessarily be sceptical as to the conclusions arrived at. Admitting the assumption that at the moment at which the greatest velocity is attained by a falling body in a resisting medium, the motive force which causes the body to descend must be equal to the force of resistance. Then if we can find expressions for both these forces and equate them together, we may arrive at the value of r, which expresses a uniform velocity, representing the greatest velocity, or, according to the conventional rule, twice the height due to the greatest velocity.

So far we have only considered abstractedly the attractive force which causes a particle of matter to descend; but now, when we are about to deduce a formula adapted to practical application, we must admit the considerations of form and relative density or specific gravity. The fluid with which we have to deal in matters relating to gunnery is the air, and therefore we may consider the specific gravity of the fluid as constant upon all occasions, and represent it by n. The

specific gravity of the falling body depends upon the material of which it is composed, but whatever that may be we shall represent it by N.

As we only propose to carry the present investigation so far as may enable us to test the truth of our theories by experiments upon falling bodies, we shall suppose the form of the falling body to be spherical. Take d to represent the diameter of the sphere, then the solid contents will be $\frac{1}{6}\pi d$

As we are about to institute a comparison between the motive force and the generated resistance, and as no resistance can be generated till motion takes place, it would be natural to suppose that $\frac{1}{6}\pi d^3 \mathrm{N}$ would be taken to express the initial motive force; but on the contrary, $\frac{1}{6}\pi d^3 (\mathrm{N} - n)$ appears to be generally taken to express the motive force, assuming an initial resistance which seems to be an absurdity.

The expression for the force of resistance is generally arrived at as follows;—The resistance is supposed to vary in proportion to the number of particles which strike a plane moving through the fluid in any given time multiplied into the force with which each particle respectively strikes the plane; but both the number of particles which strike the plane during any given time, as well as the force of each particle respectively, must be proportional to the velocity with which the plane is moving through the fluid; therefore it is concluded that the resistance is proportional to the square of the velocity. It is evidently considered that in arriving at this conclusion it is a sufficiently close approximation for practical purposes to suppose that the action of each particle ceases immediately upon impact with the plane, or, in other words, that the medium through which the plane passes is discontinued. It is supposed by Sir Isaac Newton that in continued media, as air, water, hot oil, quicksilver, &c., a body as it passes through them does not immediately strike against all the particles of the fluid that generate the resistance made to it, but presses only the particles that lie next to it, which press the particles beyond, which press other particles, and so on. It is assumed that the resistance to a plane moving perpendicularly through an infinite fluid at rest is equal to the force of the fluid on the plane at rest, upon the supposition that the fluid moves with the same velocity as the plane was supposed to move with in the first instance, but in a contrary direction. It is also supposed that the force of the fluid in motion is equal to the pressure which causes or generates the motion. If therefore we can find an expression for the pressure of an infinite fluid upon a plane at rest of given dimensions in terms of the velocity of the fluid and known quantities, we can find an expression for the resistance of the fluid at rest to a plane of the same dimensions moving with the same velocity. With reference to this matter there appear to be different theories; but assuming for the present that the pressure of a fluid upon a given plane is equal to the weight or pressure of a column of the fluid, the base of which is equal to the plane and the height equal to the altitude due to the velocity with which the fluid is moving, which according to the conventional rule $= \frac{v^2}{2g}$, $\frac{v^2 . n . a}{2g}$ will equal the weight or pressure of such a column, n representing the specific gravity of the fluid and a the area of the base, and will also express the resistance of the fluid to a body moving through it with the velocity v, the cross-section of the body perpendicular to the line of motion being expressed by a. If the moving body be a cylinder the diameter of the cross-section being represented by d, $a = \frac{\pi . d^2}{4}$.

3370.

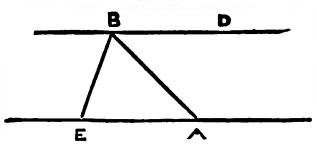

When the cross-section of the moving body is inclined to the direction of motion, let s express the sine of the angle of inclination, A B, Fig. 3370, being the direction of the plane and B D that of the motion. The number of particles or quantity of the fluid which strike the plane will be diminished in the ratio of $1 : s$, also the force of each particle will be diminished in the same ratio. Therefore on these accounts it is supposed the ratio will be diminished in the ratio of $1 : s^2$. But this is upon the supposition that the particles strike the plane perpendicularly, and as they strike obliquely it is considered that the effect will be diminished in the ratio of $1 : s^3$. Therefore upon this supposition $\frac{v^2 . n . s^3 . a}{2g}$ will express the resistance.

3371.

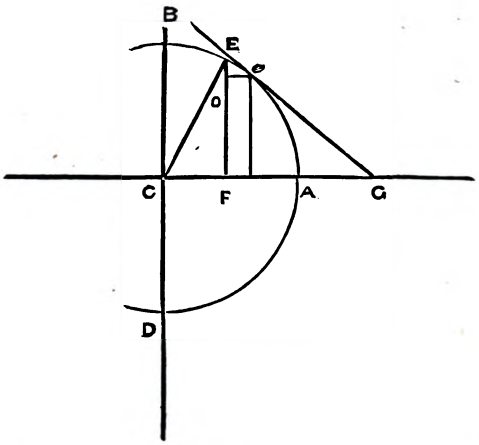

Let B E A D, Fig. 3371, be a section through the axis C A of the solid moving in the direction of that axis; let E G be a tangent to any point in the curve meeting the axis produced in G; let C F and F E represent the ordinates x and y to the point E, E o e the differential triangle; take z to express the arc B E, s the sine of the angle G; $2\pi y$ will equal the circumference described by the point E in revolving about the axis C A; and therefore $2\pi y . dz$ will express the differential of the area opposed to the motion, and $\frac{v^2 . n \ s^3}{2g} . 2\pi y . dz = \frac{v^2 . n . \pi s^3}{g} . y . dz$ will express the differential of the resistance. Let the solid be a sphere, and take r to express the radius C A;

$y = \sqrt{(r^2 - x^2)}$; $s = \frac{EF}{EG} = \frac{CF}{CE} = \frac{x}{r}$; $y.dz = (EF.Ee) = (CE.oe) = r.dx$; therefore

$$\frac{v^2.n.\pi s^3}{g}.y.dz = \frac{v^2 n \pi}{g}\frac{x^3}{r^3} r\,dx = \frac{v^2 n \pi}{g r^2} x^3.dx; \qquad \int \frac{v^2 n \pi}{g r^2} x^3.dx = \frac{v^2 n \pi}{4 g r^2} x^4;$$

when $x = r$, $\frac{v^2.n.\pi}{4 g r^2} x^4 = \frac{v^2.n.\pi.r^2}{4g}$. Taking d to represent the diameter of the sphere, $\frac{v^2 n \pi d^2}{16 g}$ will express the resistance. Equating this expression with $\frac{1}{6}\pi d^3(N - n)$, the expression for the motive force, we have $\frac{v^2.n.\pi d^2}{16g} = \frac{1}{6}\pi d^3(N - n)$; $v^2 = 2g\frac{4}{3}d\frac{N-n}{n}$; $\frac{v^2}{2g} = \frac{4}{3}d\frac{N-n}{n}$. But as v has been taken to express the greatest velocity, $\frac{v^2}{2g}$ will express the height due to such velocity; but r = twice the height due to the velocity v, therefore $r = \frac{8}{3}.d.\frac{N-n}{n}$, or $r = \frac{8}{3}d\frac{N}{n}$, upon the supposition that at the commencement of the motion the resistance = 0.

Having thus obtained a value for r we can obtain a value for the time of descent of a spherical body of any given dimensions and specific gravity through any given space represented by y.

It has been assumed in the preceding investigation that the pressure of a fluid upon a given plane is equal to the weight or pressure of a column of the fluid, the base of which is equal to the plane and the height equal to the altitude due to the velocity of the fluid. This is generally proved as follows:—

Take M N O P, Fig. 3372, to represent a vertical section of a cylindrical vessel filled with a fluid up to the level G H, at which height it is supposed to be always retained; M P the diameter of the base, and C D the diameter of a circular orifice in the base, which is supposed to be very small compared with M P; C I K D a section of a column of the fluid standing directly above the orifice, and C A B D a section of a plate of the fluid immediately contiguous to the orifice. Take v to denote the velocity with which the plate C A B D would descend in vacuo through the space B D, subject only to the influence of gravity. Take V to denote the velocity with which the plate C A B D is discharged from the orifice when subjected to the pressure of the entire volume of the fluid, which a reference to any elementary work will show may, according to theoretical reasoning, be represented by the column C I K D. The velocities are as the moving forces, and the times in which they act directly and inversely as the quantity of matter moved; but it will be evident upon the supposition that the fluid is homogeneous that the moving forces will be as the heights B D and K D. The times in which they act are inversely as the velocities, the space being given, namely B D, and the quantities of matter moved equal, the quantity of matter in both cases being represented by the plate of fluid A C D B; therefore $v : V :: \frac{BD}{v} : \frac{KD}{V}$; $v^2 : V^2 :: BD : KD$; $v : V :: \sqrt{BD} : \sqrt{KD}$.

3372.

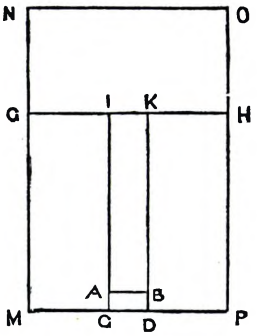

But B D is the height due to the velocity v, therefore K D is the height due to the velocity V, and K D is the height of the fluid. It will be observed that in this case V represents the velocity at the orifice, not the mean velocity of the descent of the fluid. The pressure on the orifice is equal to a column of the fluid of which the base is equal to the area of the orifice and the altitude equal to the height of the fluid. Therefore, admitting the usual suppositions, and also that the result in the case just investigated may be taken to represent the resistance in an unconfined fluid, the problem is solved.

The following may be taken as representing to a certain extent the line of reasoning employed in Prop. 36, Lib. II., of Newton's Principia in this matter, by means of which it will be seen a different result is arrived at.

Take A B C D, Fig. 3373, to represent the vertical section through a cylindric vessel which is supposed to remain constantly full of water. To illustrate this, Sir Isaac Newton supposes a block of ice on the top of the vessel, the lower surface of the ice being in contact with the upper surface of the water, so that as the water descends through an orifice in the bottom of the vessel, of which L M represents the diameter, the ice shall dissolve and constantly supply the deficit. If we take E F to represent the line of surface at any variable distance B E, which line of surface had been originally at B C, it will be evident that the quantity of water run out at the orifice during the descent from B C to E F will be represented by E B C F. Take U to represent the quantity of water contained in the vessel, m the area of the circular surface at B C, and m' the area of the circular orifice of which L M is the diameter; then as the velocities of equal quantities of water through different openings during the same time are inversely as the areas of the openings taking V to represent the velocity at the orifice and V' the velocity at the surface B C, we have $V : V' :: m : m'$. Take x equal A B the height of the fluid, and $a + x$ the height due to the velocity at the orifice, $V^2 : V'^2 :: m^2 : m'^2 :: a + x : \frac{m'^3}{m^2}(a + x)$, which represents the height due

3373.

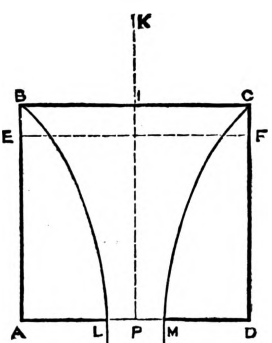

to the velocity at B C; therefore, while $a + x$ represents the height due to the velocity at the orifice, $\frac{m'^2}{m^2}(a + x)$ will represent the height due to the velocity at the surface. Differentiating both these expressions, we have dx and $\frac{m'^2}{m^2}dx$. Assuming the differential of the height due to the mean velocity of the fluid as equal to the difference of the above differentials, we have $dx - \frac{m'^2}{m^2}dx$ to represent the differential of the height due to the mean velocity of the descending fluid; therefore $d.\mathrm{U} = \left\{dx - \frac{m'^2}{m^2}dx\right\}m = m\,dx - \frac{m'^2\,dx}{m}$, also $\mathrm{U} = m.x$. If v represents the mean velocity with which the water descends, the momentum of pressure upon the base may be expressed by $\mathrm{U}.v$ according to conventional rule. mx evidently expresses the quantity of water contained in the vessel, which multiplied with the distance of the centre of gravity of the mass of water from the plane of the bottom of the vessel, will express the momentum also. But in this case the distance of the centre of gravity from the bottom of the vessel upon which the pressure is applied $= \frac{1}{2}x$; therefore taking M to represent the momentum, $\mathrm{U}.v = \mathrm{M} = \frac{1}{2}mx^2$. Differentiating, $v.d\,\mathrm{U} + \mathrm{U}\,dv = m.x.dx$. Substituting the values for d U and U already found, we have $v.m.dx - v\frac{m'^2}{m}dx + mx\,dv = mx.dx$; dividing by m, $v.dx - v\frac{m'^2}{m^2}dx + x.dv = x.dx$. Take $\left(1 - \frac{m'^2}{m^2}\right) = r$, $r.v.dx + x\,dv = x\,dx$. Multiplying both sides of this equation by x^{r-1}, $r.v.x^{r-1}.dx + x^r.dv = x^r.dx$; integrating, we obtain $v\,x^r = \frac{x^{r+1}}{1+r}$; dividing by x^r, $v = \frac{x}{1+r}$. We assumed $1 - \frac{m'^2}{m^2} = r$; therefore

$$2 - \frac{m'^2}{m^2} = \frac{2m^2 - m'^2}{m^2} = 1 + r; \quad v = \frac{x}{1+r} = \frac{m^2 x}{2m^2 - m'^2}.$$

Take K I to represent the height due to the velocity at the surface, and K P the height due to the velocity at the orifice, K I : K P :: V'² : V², V' : V :: P L² : I B², V'² : V² :: P L⁴ : I B⁴, K I : K P :: P L⁴ : I B⁴; this determines the curve B L, and the cataract B L M C is formed by the revolution of this curve about the axis K P. It is supposed that the contents of this cataract expresses the quantity of water which presses upon the orifice in the same manner as if the rest was congealed into ice; therefore the portion of the water contained in the solid described by the same curve B L round the axis B A expresses the quantity which presses upon the ring described by A L in the rotation.

Let $a\,b$, Fig. 3374, represent the diameter of this ring, and $a\,c\,b$ a section of the solid described by the revolution. Take a to express K I, $x = $ I P, $b = $ B I, $y = $ P L, $z = $ A L, then $y = b - z$; therefore by the property of the curve, $a : a + x :: y^4 : b^4$; $\frac{a\,b^4}{y^4} = a + x$; $\frac{a\,b^4}{y^4} - a = x$. Substituting value for y^4, $\frac{a.b^4}{(b-z)^4} - a = x$. Differentiating, $\frac{4\,a\,b^4\,dz}{(b-z)^5} = dx$. But the differential of the solid described by the area A B L about the axis A B $= x$ is equal to the cylinder whose base is the circle described by the ordinate A L $= z$ and altitude equal to dx. This solid is therefore proportional to $z^2.dx$, while $z^2.x$ expresses the cylinder of the same base and altitude, $z^2\,dx = \frac{4\,a\,b^4\,z^2\,dz}{(b-z)^5} = \frac{a\,b^2}{3}\frac{12\,b^2.z^2\,dz}{(b-z)^5}$.

3374.

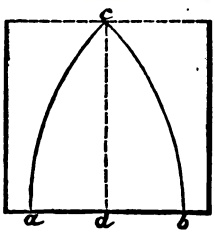

Therefore the solid $a\,c\,b$ will be proportional to $\frac{a\,b^2}{3}\int\frac{12\,b^2\,z^2\,dz}{(b-z)^5}$. Take $12\,b^2 = \mathrm{M}$,

$$\mathrm{M}.\int z^2\frac{dz}{(b-z)^5} = z^2\frac{1}{4(b-z)^4} - \int\frac{1}{2}z\frac{dz}{(b-z)^4}; \quad \int\frac{1}{2}z\frac{dz}{(b-z)^4} = \frac{1}{2}z\frac{1}{3(b-z)^3} - \int\frac{1}{6}\frac{dz}{(b-z)^3};$$

$$\int\frac{1}{6}\frac{dz}{(b-z)^3} = \frac{1}{6}\frac{1}{2(b-z)^2}. \quad \text{Therefore} \int z^2\frac{dz}{(b-z)^5} = \frac{z^2}{4(b-z)^4} - \frac{z}{6(b-z)^3} + \frac{1}{12(b-z)^2} + \mathrm{C}.$$

When $z = 0$, $0 = \frac{1}{12\,b^2} + \mathrm{C}$, $\mathrm{C} = -\frac{1}{12\,b^2}$; therefore the corrected integral is

$$\frac{z^2}{4(b-z)4} - \frac{z}{6(b-z)^3} + \frac{1}{12(b-z)^2} - \frac{1}{12\,b^2} = \frac{3z^2 - 2z(b-z) + (b-z)^2}{12(b-z)^4} - \frac{1}{12\,b^2}$$

$$= \frac{3\,b^2z^2 - 2\,b^2z(b-z) + b^2(b-z)^2 - (b-z)^4}{12\,b^2(b-z)^4}$$

$$\frac{3\,b^2z^2 - 2\,b^3z + 2\,b^2z^2 + b^4 - 2\,b^3z + b^2z^2 - b^4 + 4\,b^3z - 6\,b^2z^2 + 4\,bz^3 - z^4}{12\,b^2(b-z)^4} - \frac{4\,bz^3 - z^4}{12\,b^2(b-z)^4};$$

$$\mathrm{M}\int z^2\frac{dz}{(b-z)^5}=\frac{4bz^3-z^4}{(b-z)^4}.$$

Therefore the solid acb is proportional to $\frac{ab^2}{3}\,\frac{4bz^3-z^4}{(b-z)^4}$. Substituting value for x in z^2x, we have $\frac{az^2b^4}{(b-z)^4}-az^2=az^2\left\{\frac{b^4}{(b-z)^4}-1\right\}$; therefore the solid is to the cylinder as

$$\frac{ab^2}{3}\,\frac{4bz^3-z^4}{(b-z)^4}:az^2\left\{\frac{b^4}{(b-z)^4}-1\right\}=\frac{b^2}{3}\,\frac{4bz^3-z^4}{(b-z^4)}:\frac{z^2\{b^4-(b-z)^4\}}{(b-z)^4}=\frac{b^2}{3}(4bz^3-z^4):z^2\{b^4-(b-z)^4\}.$$

But $z^2\{b^4-(b-z)^4\}=4b^3z^3-6b^2z^4+4bz^5-z^6$; therefore the proportion becomes

$$\frac{4b^3z^3-b^2z^4}{3}:\{4b^3z^3-6b^2z^4+4bz^5-z^6\};$$

or dividing by z^3, $\left\{\frac{4}{3}b^3-\frac{1}{3}b^2z\right\}:\{4b^3-6b^2z+4bz^2-z^3\}$. If we suppose z to become infinitely small, or in other words suppose the diameter at the orifice to approach without limit to an equality with the diameter at the surface, all the terms involving z may be neglected, and the proportion will become $\frac{4}{3}b^3:4b^3$, or $\frac{1}{3}:1$; and also m', which has been taken to represent the area of the orifice, may be taken equal to m, the area at the surface, and $v=\frac{m^2x}{2m^2-m'^2}$ becomes $v=x$. Therefore x equals twice the height due to the velocity v.

If we suppose the water to be at rest, and the small circle of which ab represents the diameter to ascend with the velocity equal to v with which the water was supposed to descend, it will be evident that the same expression which represented the pressure when the fluid was in motion and the circle at rest will represent the resistance when the circle is in motion and the fluid at rest; but the solid representing the pressure in the first case is to the cylinder whose base is the small circle and altitude x, as $\frac{1}{3}:1$, and consequently the resistance will bear the same proportion. It follows that in order to meet with a resistance equal to the pressure of the cylinder the small circle must move with a velocity equal $3.v$; but the heights due to any given velocities are as the squares of the velocities, therefore twice the height due to the velocity $3.v$ will equal $9.x$; but this is upon the supposition that the cylinder is of the same specific gravity as the fluid.

If we suppose the small circle which forms the base of the cylinder to remain constant, and also the velocity, then in order to express the pressure which denotes the resistance we must reduce the altitude x of the cylinder in proportion to the increase in the specific gravity. Take N to represent the specific gravity of the cylinder, and n the specific gravity of the fluid; then if we suppose the velocity to be the greatest velocity attainable in the medium in which the body is moving, and r to represent twice the height due to such velocity when the specific gravity of the moving body is represented by N and that of the fluid by n, we have $r:9x::\mathrm{N}:n$, the sphere is $\frac{2}{3}$ of the cylinder. If therefore we suppose the specific gravity of the sphere to be N, and the specific gravity of the circumscribing cylinder to be $\frac{2}{3}$ N, the pressure which is the exponent of the resistance will be the same if we substitute the cylinder for the sphere; therefore when the form of the moving body is spherical, the proportion becomes, taking d to represent the diameter of the sphere and consequently the height of the circumscribing cylinder, and substituting it for x, $r:9d::\frac{2}{3}\,\mathrm{N}:n$; $r=\frac{6\,\mathrm{N}.d}{n}$.

It will be observed that in arriving at this conclusion the resistance to solid bodies moving through a fluid is supposed to be the same, when the cross-sections of the solids at right angles to the line of motion are equal without reference to the form of the solid.

In Lemma IV., Lib. II., of the Principia, we find the following;—If a cylinder move forward uniformly in the direction of its length, the resistance made thereto is not at all changed by augmenting its length or diminishing that length, and is therefore the same with the resistance of a circle described with the same diameter, and moving forward with the same velocity in the direction of a right line perpendicular to its plane; for the sides are not at all opposed to the motion, and a cylinder becomes a circle when its length is diminished *ad infinitum*. The force of the last part of the reasoning is not immediately apparent, for if the cylinder is not diminished *ad infinitum* it does not become a circle.

In the report of a lecture on the flight of projectiles, delivered at the R. U. S. Institution in 1865 by General Anstruther, we find the following statement made by the Editor of the present work; —"It has been found by experiment on railways that the resistance of the atmosphere to the motion of a train depends chiefly upon the length of the train and not upon the frontage of the carriages; the resistance resembles more that of friction than the moving of a long parallelopiped of the fluid in which the body moves."

It is generally supposed that when the velocity of a body moving through a resisting medium exceeds a certain limit the resistance becomes increased, in consequence of a vacuum being formed in rear of the moving body, leaving the body to sustain the whole force of the resistance of the particles of the fluid opposed to the motion without any support from the particles moving in, in rear, upon the track of the moving body. This is supposed to take place when the velocity of the moving body exceeds the velocity with which the particles of the air subjected to the pressure of a

column equal in height to the height of the atmosphere will rush into the orifice supposed to be left by the advance of the moving body. Sound moves at the rate of 1142 ft. in a second, and as sound is propagated by the elastic force of the air, therefore the elastic force of the air is such as to produce an equivalent velocity; this is therefore sometimes taken to mark the limit from which the vacuum is formed.

Much has been written on these subjects by Newton, Bernoulli, D'Alambert, Bossut, Buat, and many other authors; and a good abridgment of all that can be said on the subject, assuming the established laws of gravity, will be found in the Treatise on Artillery for the practical class of the R. M. Academy, published by authority in 1866. But instead of entering further into detail in these matters, we should propose in the first place that we should test by actual experiment the accuracy of our present theory founded upon the laws of gravity generally received. If the experiment should prove the theory to be fallacious, the next step we should propose would be to endeavour to ascertain by experiment where the fallacy exists—whether in an erroneous estimate of the resistance of the air, or of the force of gravity, or both. We have facilities of experiment now which were not formerly attainable in the same degree. These may be furnished by the improvements in the construction and mode of working balloons, by electricity, photography, telegraphy, accuracy in measuring time, as well as in graduating and constructing optical instruments; and add to all these a calculus which will enable us to solve problems which were formerly beyond our reach

The first experiment we should propose is as follows;—That on a calm, favourable day an ascent should be made in a balloon carrying a spherical body of known density, as homogeneous as it is possible to make it; that an observer should be stationed at any convenient point for taking the elevation of the balloon at any given time; that the spherical body should be attached to the car of the balloon, so as to be detached suddenly, at a signal, by means of the suspension of an electric current—the weight of the shot, indicated by a spring balance, should be taken at the instant it is detached from the car; that the signal should be given from the point of observation at the moment that the elevation is taken by means of a theodolite or other suitable instrument; that the height of the balloon from which the body drops should be estimated by a single observation, the distance from the point of observation to the point where the spherical body drops being taken as radius, and the tangent of the observed angle to such radius, added to the height of the observer's eye, being taken as the height of the balloon. We have given a formula by means of which the time of descent may be calculated according to the theory now extant; the diameter and density of the falling body, the height descended as well as the moment of detachment being known; the time of descent being accurately noted and compared with the time by calculation will show the amount of discrepancy which may exist between them. If the discrepancy is great, we must conclude that our theory is fallacious; and, on the other hand, if the times nearly agree, we may conclude that our theoretical formulæ are sufficiently close approximations to the truth for practical purposes, and we may go further into detail to improve it. If we find a sensible discrepancy, which is most likely to be the case, we must then have recourse to further experiment, in order to discover where the fallacy exists.

We have assumed the descent of the spherical figure to be vertical; that is, that the falling body descends upon a vertical straight line in the direction of the plumb-line. It appears to us that the error incurred in consequence of this assumption will be less than the error arising from two observations which may not be simultaneous. If the single observation should be taken exactly at the moment that the spherical body is detached, and the time correctly noted, the only source of error will be the irregular motion during the descent of the spherical body, and the experiment will be much simplified, as it will be only necessary to measure the distance from the point of observation to the point where the spherical body reaches the ground. Even upon the supposition that the exact vertical height of the balloon was ascertained by a double observation, the error arising from irregularity of the motion in the descent would remain.

We shall now give a short extract from a small pamphlet lately published, entitled Theory of Gunnery, offered to the Institution of Civil Engineers by Gen. Anstruther;—

"When a ball has been projected obliquely upwards it is acted upon by two forces—the resistance of the atmosphere and gravity; the former of these two can only act in reducing the magnitude of the ascent, the latter of the two deflects the ascent vertically, so as to bring the ball to the ground at the expiration of a certain time of flight, at a distance from the gun called the range.

"If the true angle of departure is given to us as the elevation, and the horizontal space passed over as the range, we can determine the trajectory to an inch.

"We multiply the given range in feet by the tangent of the elevation; the product is the measure of the vertical descent, the fall by gravity in the time of flight."

This offers a useful suggestion for further experiment in order to test the validity of our present theory of gravity. The angle made by the axis of the gun, or the tangent to the curve of trajectory at the initial point and the direction of the object, is called the angle of elevation. The angle of departure required by the General is the true angle of elevation with the horizon, or complement of the zenith distance, which latter is the angle made by the vertical passing through the point of projection and the direction of the piece. This angle being known, the General considers that the vertical deflection during the time of flight will be equal to the tangent of the given angle to a radius equal to the measured range. If this be the case, it evidently suggests another means of ascertaining the time of descent through a given distance under the influence of gravity and the resistance of the air; for the height descended will be known by calculation, and the time by observation (being the time of flight).

The results of these two experiments being compared together, and with the results by calculation according to the existing theory, might lead to some useful conclusions. The resistance of the air is evidently a retardative force, with the law of which we are at present unacquainted. It is generally supposed that it acts only on the line of motion of the projectile, but as the initial impulse becomes weaker in consequence of the augmenting force of resistance, the ratio of the

impulsive force to the force of gravity is constantly changed, and the deflecting power of the force of gravity becomes comparatively stronger as the projectile proceeds; from this cause alone the force of gravity also varies by some law, as the moving body approaches nearer and nearer to the centre of force. These variations would render the determination of the curve rather an intricate matter, even if we were acquainted with the laws of variation, which at present we are not. But if a tolerably close approximation to the laws of variation could be arrived at by experiment, the means of calculation for the formation of reliable tables could be soon found.

Admitting the statement that a body impelled by a given force in a given direction will proceed with a *uniform velocity* in that direction *ad infinitum*, unless influenced by some counteracting force; admitting also that the force of gravity acts on parallel vertical lines, and the force of resistance of the air only on the line of trajectory of the projectile, it would follow that the time of flight should be a very close approximation to the time of descent through a distance equal to the vertical deflection, calculated according to General Anstruther's theory; and the matter might be tested by dropping shot from a balloon at different heights, and also observing the time of flight corresponding to different ranges, interpolating in both cases, and comparing the results.

We shall now pass on to experiments with a view to ascertain as nearly as possible by a practical test the respective laws of variation, of gravity, and the resistance of the air. We shall here extract some remarks, by the Editor of the present work, on this subject, to be found in the report of General Anstruther's lecture, delivered at the R. U. S. Institution in 1866; also the calculation of certain formulæ, which we shall here modify so far as to put them in a more explanatory form than that in which they appear in the report;—

"To find whether the resistance of the air or any other fluid medium is proportional to the square of the velocity (V) or not, and also to find whether the value usually given to (g) the force of gravity near the surface of the earth is under or over estimated, generally g is put $= 31\frac{1}{6}$, $32\frac{1}{6}$, 32, &c. Let v^2 multiplied by some constant coefficient express the retarding force, and to simplify the investigation put this coefficient under the form $n^2 g$; then the motive force will be expressed by $g - g n^2 v^2$. Taking the equation $dv = f.dt$, and substituting $g(1 - n^2 v^2)$ for f, we have $dv = g(1 - n^2 v^2)\,dt$; $\frac{dv}{1 - n^2 v^2} = g.dt$; $\frac{1}{g n^2} \frac{dv}{\frac{1}{n^2} - v^2} = dt$; $\frac{1}{g n^2} \int \frac{dv}{\frac{1}{n^2} - v^2} = t$. Assume $\frac{1}{n} = a$, the expression becomes $\frac{a^2}{g} \int \frac{dv}{a^2 - v^2} = t$, which reduces it to a well-known form, and we have $\frac{a}{2g} \left\{ \text{log.} \frac{a+v}{a-v} + \text{log. C} \right\} = t$. When $v = 0$, $t = 0$; therefore $\frac{a}{2g}$ log. C $= 0$, and the corrected integral is $\frac{a}{2g}$ log. $\frac{a+v}{a-v} = t$; log. $\frac{a+v}{a-v} = \frac{2gt}{a}$.

Take $2gt = m$, and ϵ to represent the base of the hyp. logs.,

$$\frac{a+v}{a-v} = \epsilon^{\frac{m}{a}}; \quad a + v = a.\epsilon^{\frac{m}{a}} - v\epsilon^{\frac{m}{a}}; \quad v\left\{\epsilon^{\frac{m}{a}} + 1\right\} = a\left\{\epsilon^{\frac{m}{a}} - 1\right\}; \quad v = a\frac{\epsilon^{\frac{m}{a}} - 1}{\epsilon^{\frac{m}{a}} + 1}.$$

Substituting value for a, $v = \frac{1}{n} \frac{\epsilon^{m.n} - 1}{\epsilon^{m.n} + 1}$.

Taking the equation $v.dv = f.ds$; substituting as before $g(1 - n^2 v^2)$ for f, we have $v.dv = g(1 - n^2 v^2)\,ds$; $\frac{v.dv}{1 - n^2 v^2} = g.ds$; $\frac{v.dv}{g(1 - n^2 v^2)} = ds$; which may be put under the form $-\frac{1}{2n^2 g} \frac{-2n^2 v.dv}{(1 - n^2 v^2)} = ds$; therefore $-\frac{1}{2n^2 g}$ log. $\frac{1}{1 - n^2 v^2}$ + log. C $= s$. When $v = 0$, $s = 0$; therefore log. C $=$ log. $1 = 0$, and $-\frac{1}{2n^2 g}$ log. $\frac{1}{1 - n^2 v^2} = s$; but

$$v = \frac{1}{n} \frac{\epsilon^{m.n} - 1}{\epsilon^{m.n} + 1}; \qquad v^2 = \frac{1}{n^2} \frac{(\epsilon^{2mn} - 1)^2}{(\epsilon^{2mn} + 1)^2};$$

therefore

$$n^2 v^2 = \frac{(\epsilon^{2mn} - 1)^2}{(\epsilon^{2mn} + 1)^2}; \quad 1 - n^2 v^2 = \frac{(\epsilon^{2mn} + 1)^2 - (\epsilon^{2mn} - 1)^2}{(\epsilon^{2mn} + 1)^2};$$

$$(\epsilon^{2mn} + 1) + (\epsilon^{2mn} - 1) = 2\epsilon^{2mn}; \quad (\epsilon^{2mn} + 1) - (\epsilon^{2mn} - 1) = 2.$$

Therefore $1 - n^2 v^2 = \frac{4\epsilon^{2mn}}{(\epsilon^{2mn} + 1)^2}$; $\frac{1}{1 - n^2 v^2} = \frac{(\epsilon^{2mn} + 1)^2}{4\epsilon^{2mn}} = \left\{\frac{\epsilon^{2mn} + 1}{2\epsilon^{mn}}\right\}^2 = \left\{\frac{1}{2}\left(\epsilon^{mn} + \frac{1}{\epsilon^{mn}}\right)\right\}^2$.

Substituting this value for $\frac{1}{1 - n^2 v^2}$ in the expression $-\frac{1}{2n^2 g}$ log. $\frac{1}{1 - n^2 v^2} = s$, we have $\frac{1}{n^2 g} \cdot \frac{1}{2}$ log. $\left\{\frac{1}{2}\left(\epsilon^{mn} + \frac{1}{\epsilon^{mn}}\right)\right\}^2 = s$; or $\frac{1}{n^2 g}$ log. $\frac{1}{2}\left(\epsilon^{mn} + \frac{1}{\epsilon^{mn}}\right) = s$; log. $\frac{1}{2}\left(\epsilon^{mn} + \frac{1}{\epsilon^{mn}}\right) = s\,n^2 g$.

Therefore $\frac{1}{2}\left(\epsilon^{mn} + \frac{1}{\epsilon^{mn}}\right) = \epsilon^{sn^2 g}$; $\epsilon^{mn} + \frac{1}{\epsilon^{mn}} = 2\epsilon^{sn^2 g}$; we assumed $m = 2gt$. Substituting this value, we have $\epsilon^{2gtn} + \frac{1}{\epsilon^{2gtn}} = 2\epsilon^{sn^2 g}$, which is under the form $y + \frac{1}{y} =$ a function of n, g, and may be solved by dual arithmetic." See DAMMING.

Then if we drop a spherical body, as homogeneous as it can be made, from a balloon upon a calm day and can mark exactly the time of descent, s and t in the equation become known quantities, ϵ being the base of the hyperbolic system of logarithms, dual log. of $\epsilon = 100000000, = 10^8$; there evidently remain only n and g unknown quantities. Repeating the experiment and ascertaining two new values for s and t, we obtain a second equation, in which n and g are the only unknown quantities. Therefore, having two equations and only two unknown quantities, we can ascertain the values of n and g. Taking the equation $v = \frac{1}{n} \frac{\epsilon^{mn} - 1}{\epsilon^{mn} + 1}$, then since g and t are known quantities m becomes a known quantity, and consequently v. The corresponding resistance also becomes known, having been originally assumed as $g\, n^2 . v^2$; we can therefore compare the velocities with the resistance in the two experiments, and thus ascertain the ratio which subsists between them.

We commenced this article by assuming as a fact that bodies under the influence of the force of gravity and uninfluenced by any sensibly counteracting force move in elliptical orbits round the centre of force. This being all that we may be said to know of the action of the law of gravity by actual observation, the rest being more or less founded upon ingenious suppositions of clever men, which suppositions have become so familiar to us, and such an imposing structure of mathematical reasoning has been raised upon them, that we forget the original instability of the foundation. We should therefore propose that the ratio of the times of descent with reference to the space descended through found by experiment should be compared with the ratio of the times calculated with reference to the law of gravity found by observation, namely, that the force or velocity is inversely proportional to the square of the distance from the centre of force. And then if the differences of the times found by experiment and calculation should bear a constant ratio to each other, we may assume that this difference represents a close approximation to the correction to be applied for the resistance of the atmosphere. A formula for this purpose might have been deduced by considering the minor axis in the ellipse to be indefinitely diminished, in which case the expression for the time in the elliptical orbit would become an expression for the time during the descent along the line of the transverse axis. But in the present case we think we shall arrive at a more practically useful result, as follows;—

We can only represent a force or its exponent velocity by a reference to space and time; when the force is singly impulsive and the velocity uniform we can express the velocity by saying that it is such as to cause a motion of so many feet or yards in one given unit of time; if the force is constant and the velocity uniformly accelerated or retarded, we can express it by stating the space generated or due to the acceleration or retardation during a given unit of time. But if the force is variably accelerated or retarded we can only express it by a complicated and elaborate formula, or else approximate to it as closely as may be desirable in a more simple form. If a force should act according to any law of uniformly accelerated or retardative motion with reference to space or distance from the centre of force, it will be evident that the same force must be considered variably accelerated or retarded when referred to equal intervals of time. For instance, if a force be inversely proportional to the square of the distance from the centre of force, and consequently with relation to a falling body directly proportional to the square of the distance from the point of departure, it will be evident that the motion, although uniformly accelerated with reference to the space or distance descended, will be variably accelerated when referred to equal portions of the time of descent, that is, the space which expresses the distance due to the acceleration during any one interval of time will not be equal to the space which expresses the distance due to the acceleration during any other equal interval of time.

Take the abscisses A P, A P′, A P″, &c., Fig. 3375, to represent the times, and the corresponding ordinates P M, P′ M′, P″ M″, &c., to represent the spaces described. We shall suppose the ordinates P M, P′ M′, P″ M″, &c., to be indefinitely near to each other; also the distances P P′, P′ P″, &c., to be equal to each other, or in other words $d\,t$; which they represent, to be constant. Draw M K parallel to the axis of the abscisses and produce the chord M M′ to X. Let T R be a tangent to the curve at the point M′; then K M = Q X = $d\,s$ will represent the space due to the acceleration during the interval of time P P′. If the motion was to become uniform at the point M′ the line of motion would be represented by the tangent M′ R. It will be evident therefore that M″ R will represent the space due to the acceleration during the interval of time P′ P″; T M′ = M′ R; T M and M″ R are parallel; therefore T M = M″ R upon the supposition that the curvature is the same throughout. In the triangles T M M′, R M′ X, T M′ = M′ R, and the angles are equal; therefore

3375.

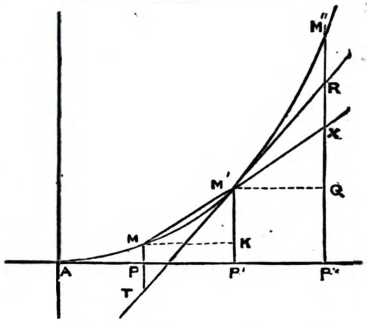

$$\text{T M} = \text{R X},\ \text{M}''\text{R} = \text{T M} = \text{R X},\ \text{X M}'' = 2\,\text{M}''\text{R};\ \text{K M} = d\,s,$$
$$\text{K M}' - \text{Q M}'' = \text{Q X} - \text{Q M}'' = -\,\text{X M}'' = d^2 s;\ -\,2\,\text{M}''\text{R} = d^2 s.$$

Here the motion has been considered with reference to the point of departure of a body falling towards the centre of force, and consequently the velocity is accelerative and the curve convex towards the axis of the abscisses. But if we consider it with reference to the point at which the falling body reaches the ground, estimating from that point towards the point of departure, the velocity must be taken as retardative; the curve will be concave towards the axis of the abscisses, and the expression becomes $2\,\text{M}''\text{R} = d^2 s$. The equation $2\,s = f\,d\,t^2$ was arrived at upon the supposition that f was constant. Although this supposition appears to be inadmissible with reference

to the entire time of descent of a falling body, and only productive of error and confusion, still the application may be considered admissible without sensible error with reference to the movement through the first of the indefinitely short equal intervals of time into which the line of descent is supposed to be divided. In this case s in the formula expresses the space due to the acceleration during the short interval of time dt, s will therefore be represented by M″ R,

$$f\,dt^2 = 2\,\mathrm{M''\,R} = d^2s\,; \quad f = \frac{d^2s}{dt^2}.$$

The intensity of the force of attraction may be supposed to become infinitely great at the centre of force, or whether infinite or not it is constant and may be represented by m; but we can always suppose the representation of the intensity of the force at some constant distance from the centre nearer to it than any distance which we shall have to consider, and therefore in our calculations the quantity expressing this force may be considered constant; let it be represented by m. The fact of its being a constant quantity whatever its actual value may be will be sufficient to enable us to institute a comparison of ratios with reference to other forces at a greater distance from the centre. The distance of the point of departure of a falling body from the centre of force is known, being equal to the radius of the earth added to the line of descent, and may therefore be also represented by a constant quantity. Let this latter be represented by a. Then when the intensity of the attractive force is inversely proportional to the square of the distance from the centre of force, taking s to represent the line of descent, we have $\frac{m}{(a-s)^2} = f$; therefore $\frac{d^2s}{dt^2} = f = \frac{m}{(a-s)^2}$; $\frac{ds}{dt} = v$. Upon the supposition that dt is constant,

$$\frac{ds}{dt}\cdot d\left(\frac{ds}{dt}\right) = v\,.\,dv\,; \quad \frac{d^2s}{dt^2}\,.\,ds = v\,.\,dv = \frac{m\,ds}{(a-s)^2}.$$

Integrating, $v^2 = \frac{2m}{a-s} + \mathrm{C}$. Upon the usual supposition that when $v = 0$, $s = 0$, $\mathrm{C} = -\frac{2m}{a}$; and the corrected integral is

$$v^2 = \frac{2m}{a-s} - \frac{2m}{a} = \frac{2ma - 2ma + 2ms}{a(a-s)} = \frac{2\,.\,m\,.\,s}{a(a-s)}\,; \quad v = \sqrt{\frac{2m}{a}}\cdot\sqrt{\frac{s}{(a-s)}}\,;$$

therefore when $s = a$, v is infinite. In $v = \sqrt{\frac{2m}{a}}\cdot\sqrt{\frac{s}{a-s}}$, substitute $\frac{ds}{dt}$ for v;

$$\frac{ds}{dt} = \sqrt{\frac{2m}{a}}\,\sqrt{\frac{s}{a-s}}.$$

Taking the reciprocals,

$$\frac{dt}{ds} = \sqrt{\frac{a}{2m}}\cdot\sqrt{\frac{a-s}{s}}\,; \quad dt = \sqrt{\frac{a}{2m}}\,\sqrt{\frac{a-s}{s}}\,ds\,; \quad t = \sqrt{\frac{a}{2m}}\int\sqrt{\frac{a-s}{s}}\,ds.$$

Multiply both terms of the fraction by $\sqrt{(a-s)}$, we get

$$\frac{a-s}{\sqrt{(as-s^2)}}\,ds = \frac{\frac{1}{2}a - s}{\sqrt{(as-s^2)}}\,ds + \tfrac{1}{2}a\,\frac{ds}{(as-s^2)}\,;$$

$$t = \sqrt{\frac{a}{2m}}\left\{\int\frac{\frac{1}{2}a-s}{\sqrt{(as-s^2)}}\,ds + \frac{a}{2}\int\frac{ds}{(as-s^2)}\right\}\,; \quad \int\frac{\frac{1}{2}a-s}{\sqrt{(as-s^2)}}\,ds = \sqrt{(as-s^2)}.$$

To find the integral of $\frac{ds}{\sqrt{(as-s^2)}}$, take $s = \frac{1}{2}a - z$; $ds = -dz$;

$$as - s^2 = \tfrac{1}{2}a^2 - az - (\tfrac{1}{4}a^2 - az + z^2) = \tfrac{1}{2}a^2 - az - \tfrac{1}{4}a^2 + az - z^2 = \tfrac{1}{4}a^2 - z^2 = \frac{a^2 - 4z^2}{4}\,;$$

$$\sqrt{(as-s^2)} = \frac{\sqrt{(a^2-4z^2)}}{2}\,; \quad \frac{ds}{\sqrt{(as-s^2)}} = \frac{-2\,dz}{\sqrt{(a^2-4z^2)}}\,; \quad \int\frac{-2\,dz}{\sqrt{(a^2-4z^2)}} = \cos.^{-1}\frac{2z}{a}.$$

We have taken $s = \frac{1}{2}a - z$, therefore

$$z = \tfrac{1}{2}a - s\,; \quad 2z = a - 2s\,; \quad \frac{2z}{a} = \frac{a-2s}{a}\,; \quad \int\frac{ds}{\sqrt{(as-s^2)}} = \cos.^{-1}\frac{a-2s}{a}\,;$$

$$t = \sqrt{\frac{a}{2m}}\left\{(as-s^2) + \tfrac{1}{2}a\cos.^{-1}\frac{a-2s}{a}\right\}.$$

When $t = 0$, $s = 0$; therefore the above is the correct integral.

If $s = a$, $\sqrt{\frac{a}{2m}}(as-s^2) = 0$, and $\frac{a-2s}{a} = -1 = \cos.\,180°$; therefore in this case

$$\cos.^{-1}\frac{a-2s}{a} = \pi\,; \quad t = \sqrt{\frac{a}{2m}}\cdot\frac{1}{2}a\pi = \frac{1}{\sqrt{8m}}a^{\frac{3}{2}}\,;$$

therefore the times of the descent of falling bodies from different heights would be as the square roots of the cubes of the lines of descent, upon the supposition that the force of attraction is inversely proportional to the square of the distance, and that there is no resistance; for the radius of the earth being constant the lines of descent will be as the distance from the point of departure of the falling body to the centre of force represented by *a*.

A careful comparison of the results of these experiments might lead to the discovery of the two great secrets, the law of gravity near the surface of the earth, and the correction to be applied for the resistance of the air. We believe that it would be also possible to obtain the trace of the trajectory of a shell if not of a round shot at short range and slow velocity by means of photography. The instrument should be placed at such an angle as to bring a sufficient portion of the range within the field of the lens to admit of our determining the general law of the curve. We should then have an oblique view of the range, the abscisses being foreshortened, while the ordinates would be in their due proportion; but the angle at which the instrument had been placed with reference to the line of direction being known, the abscisses could be calculated in their true proportions, and thus the law of the curve might be obtained.

There are three forces to which a projectile during its trajectory is subjected—the attractive force of gravity, the resistance of the air, and the initial propelling force. We have spoken of the first two in this article, and the third and last will be found treated of under the heads GUNPOWDER.

We have little doubt that a series of experiments carefully conducted, utilizing the improved means and appliances now at our disposal, would lead to a much closer approximation of calculated formulæ to practical results than has been as yet attained, enabling us to generalize, interpolate, and form corrected and at the same time practically useful tables. But to the prosecution of such experiments an insuperable objection appears to arise; they require appliances and means not usually at the disposal of private individuals, and the same stimulus to enterprise and risk of loss which exists in all matters relating to improvements in mechanical action when profit follows immediately upon successful results, does not exist in this case. Probably some would be inclined, in the interests of science alone, to carry out experiments of this kind if they were in possession of the means; but an assortment of large guns, balloons, voltaic batteries, and photographic apparatus, does not, as a general rule, form a portion of the properties of a gentleman of the period. Those therefore who are specially interested in facilitating the destruction of their fellow-creatures must only wait patiently till the matter is taken up by some of our foreign neighbours, and then, if they should be successful in discovering the true laws of gravity and resistance, we may be able to purchase the secret. But in the meantime we may console ourselves with the reflection that there is no absolute necessity for further discovery or improvement, for we find it stated by authority with reference to the effect of the resistance of the atmosphere to the motion of a projectile, that sufficient is known to guide the practical artillerist, and that it is only as a scientific question that any further prosecution of the subject is of interest, and this more on account of the difficulty of solution than for its practical importance. This fact being established, there remains little inducement to proceed further with an inquiry into the laws of gravity and the resistance of the air, for it is a difficult and intricate subject to deal with; and if no practically useful results are to be expected, and if it is merely an abstract inquiry into the laws of nature which is aimed at, the world is going much too fast for anything of that sort now. But even if we have arrived at the summit of perfection in the matter of artillery practice, it seems to be generally admitted, since long ranges have become the fashion, that some mode of ascertaining the distance in action more accurate than the unassisted estimate by the human eye is desirable. We shall therefore say a few words on this subject presently, p. 1772.

Fig. 3376 is of an instrument employed by General Anstruther to illustrate his system of gunnery.

1. Two bars, A B and B C, are joined by a hinge at B; they are to represent the ascent and descent of a projectile fired at any elevation with any velocity. A third bar A′ C′ represents the horizontal range; it is graduated by being divided into equal spaces of 100 yds. each, from A′ towards C′, 100, 200, 300, 400, &c., &c., yards, for the greatest range attainable. This bar A′ C′ has two collars, one fixed at A′, representing the place of the gun, the other movable to represent the point where the ball falls. Each of these collars has a ring through which the bars A B and B C will pass, and a milled-headed screw fixes them in their desired place. The horizontal bar is mounted on trestles to admit of the unemployed portion of A B and B C passing under the horizontal range.

2. Then A′ B C′ will always form a right-angled triangle, and we graduate A B and B C by dividing them so as to show the fall by gravity in the successive seconds, 1, 2, 3, 4, &c., &c., as far as we wish to do it, or can calculate the fall; then on B C we write the spaces described in the successive seconds, and on B A the velocity acquired; the two bars will therefore be graduated thus;—

Time ..	1	2	3	4	5	6	7	8	9	10, &c.
B C	16·2	64·4	144	254·4	395	565·2	764·4	992	1247·4	1530, &c.
A B	31·8	64·1	95·1	125·6	155·5	184·8	213·5	241·6	269·1	296, &c.

3. These three bars thus graduated enable us to show the right-angled triangle formed by the simultaneous ascent and descent of any ball fired obliquely upwards; and we proceed to show how the trajectory is drawn.

4. For this purpose a set of metal rods, tinned or plated iron wire, are prepared, one for each second of time, as shown in our paragraph 2, where we show the space described by a falling body.

These are hung on the points of graduation of the oblique ascent, in an inverted order of succession, that is to say, the shortest rod lowest down; then a line drawn through the lower extremities of all these rods is the trajectory.

3376.

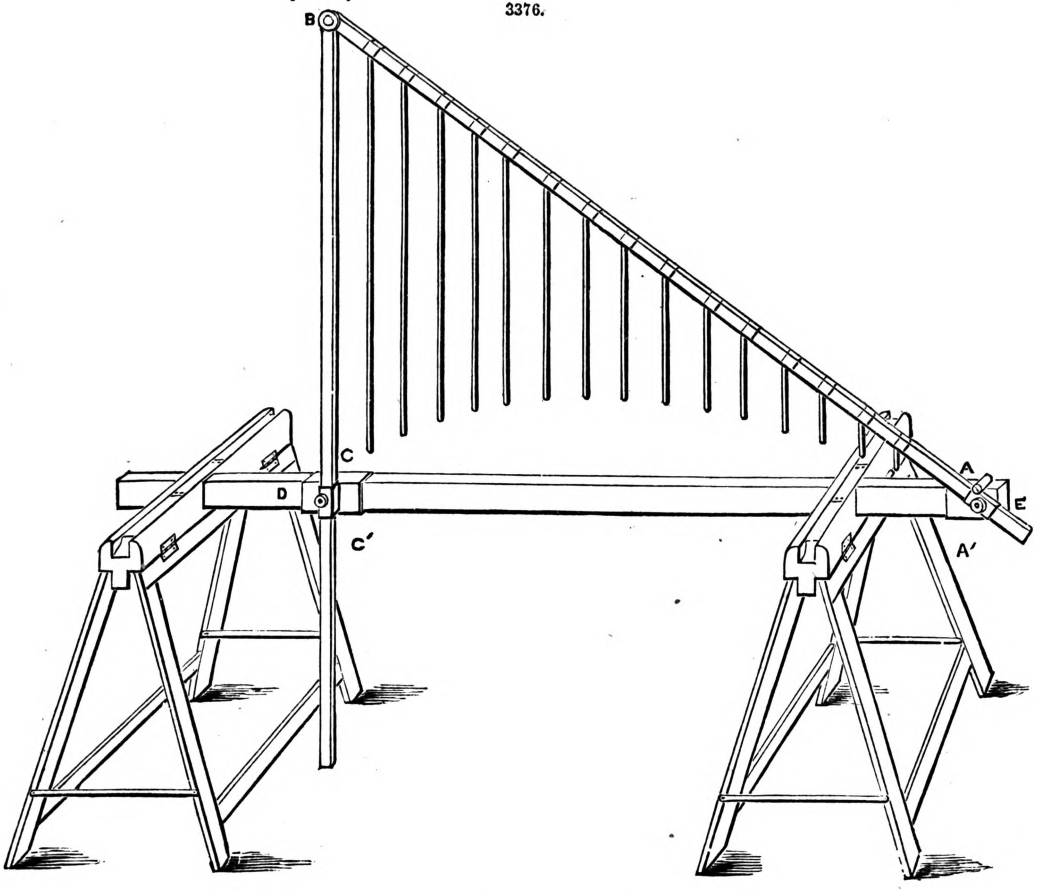

Example.—To draw the trajectory of a ball fired at an elevation of 11° 58′ 56″·25, with initial velocity 736 ft. a second, we set the bar A B in the ring of the collar at A, and clamp it to show velocity 736 ft., and we beard A B down to the desired angle, clamping its vertical bar B C at a distance of 5877·5 ft. from A′, and proceed to hang the metal rods for 1, 2, 3, 4, 5, 6, 7, 8, and 9 seconds on the oblique ascent; the last of these meets the range exactly, and we see the trajectory marked by ten given points; our Table showing the fall by gravity will enable us to give this curve for the tenth parts of seconds if required.

This instrument was offered to the service in 1864, when the model of which the above is a drawing was lodged in the United Service Institution.

Fig. 3377 is of an Electro-Chronoscope, invented by Major-General Anstruther, C.B. The object of the electro-chronoscope is to measure exactly the time of flight of a projectile between two given points. Various modes of taking the time of flight have been in use for years. The simplest is a sort of clock, which is divided into 600 parts, and which is traversed by a hand once a minute, and which may be set going and stopped by touching a lever, and from which a second hand may be detached in its course. It indicates to tenths of seconds; but, as the accuracy of this instrument depends upon the manipulation of the observer, it is subject to considerable error. The self-registering principle is therefore the only one which will give reliable results.

General Anstruther had an apparatus designed by Mr. Holmes, which was entrusted to Messrs. Elliott for execution. The principle was in the main the same as represented in the woodcut. A cylinder, covered with paper soaked in a solution of ferrocyanide of potassium, had to revolve driven by a weight. Small iron wheels attached to slight springs had to trace, by decomposition, blue lines on the paper, on the principle of Bain's electric printing telegraph, as long as an electric current passes; but when put into practice it was found that, if we may call it so, a sort of ink was formed which continued to mark after the current was broken, and consequently the object aimed at, extreme accuracy, was lost. In conjunction with Mr. Bashley Britten, Messrs. Elliott altered the plan. Instead of making use of chemical decomposition by an electric current, they substituted metallic paper for the cylinder A, and a clockwork C for the weight. At *aaaa* of sketch are four electro-magnets made of the same material, in exactly the same manner, a matter of some importance, as we shall presently see. The keepers are attached to springs which carry metallic points *pppp*. When the electric current makes the iron magnetic, the keeper is attracted, and the metallic point presses gently on the paper; one of the electro-magnets is in connection with an accurately-timed seconds pendulum, which at every beat makes connection for a

fraction of a second, or, in other words, makes the magnet attract the keeper every second, and dots on the paper cylinder. Thus we have a second registered independently of the velocity with which the cylinder rotates. If the rotation is quicker, the two dots will be farther apart, and *vice versâ*. The three other electro-magnets are in electric connection with three targets, one of which is distant about 1 ft. from the muzzle of the gun, the second and third at 100 or 200 yds., or at any other required distance. The first target consists of a simple copper wire, which is broken by the ball leaving the gun. The targets Nos. 2 and 3 consist of frames of common deal wood 6 ft. square, across which a copper wire passes backwards and forwards close enough to allow no ball to pass through without breaking it. These frames can be raised to such a height as the angle of elevation at which the gun is fired renders necessary. The cylinder A has a screw S cut on its axis, which serves as a means of propelling it while the metallic points draw, so that the lines do not fall upon each other, but run spirally round the cylinder with the pitch of the screw. For that purpose the cylinder with clockwork is fixed to a carriage which runs on the wheels while the lever L and the metallic points at *p p p p* remain stationary. At the farther end is a governor to ensure equal velocity of rotation. This governor should be a friction governor made of discs of felt, like the governor of House's printing telegraph. A governor of this kind would render this instrument complete.

3377.

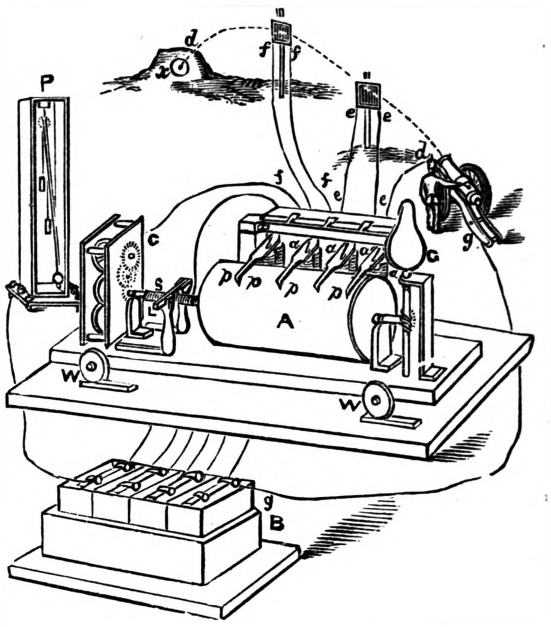

The apparatus is used in the following manner;—A galvanic battery is connected with each of the four electro-magnets; one takes into its circuit the pendulum, the second the target at the muzzle of the gun, the third the target at 100 yards distance, the fourth the target at 200 yards; the pendulum is then set going, and dots on the cylinder, which is, however, not yet in motion. The clockwork is now set going, and the three points draw lines. After one or two revolutions the command to fire is given, when the ball, in leaving the gun, breaks the wire of No. 1 target, and point No. 1 ceases to draw. When the second target is struck, point No. 2 ceases to draw; and when the third target is struck, point No. 3 ceases to draw. The clockwork is now stopped. To ascertain the time represented by these lines, the paper is taken off; where point No. 1 has ceased to draw is the starting point or zero; the length of the second and third lines will give seconds and fractions of seconds, when compared with the distance of the two dots made by the pendulum, for which purpose a scale may be used, or an ingenious contrivance of Mr. Holmes's, a compass to one leg of which a screw is attached with 100 turns, a nut turns in the second leg and subdivides one turn of the screw into 100 parts. By moving the trammels either way the points of the compass can be made to take in the two dots which represent the second, and each turn of the screw will give the 100th part of the second, be the distance great or small. A second cylinder is provided, which may be prepared with metallic paper beforehand so as to save time. Various objections may be raised to this apparatus, to some of which we will briefly allude. Electricians will point out that after the current is broken residue magnetism in the soft iron will retard the release of the keeper. We have provided against this error, firstly, by making the electro-magnets exactly alike, as mentioned before, so that we have the same retardation in the release of the three different keepers, and this error will thus be neutralized; secondly, by not bringing the keeper into actual contact with the iron, but interposing a thin brass pin. A second objection might be that the different length of the wires might have different or unequal effects on the magnets; if this should be the case, resistance coils might be enclosed in the currents to make them all alike. A third source of error, and perhaps the most inconvenient one, is, that when the three points draw, there is more friction than when they are successively released; but as the amount of friction can be ascertained, it can be allowed for.

We have examined many *Telemeters* and *Range-finders*, each of which, with the exception of the one, Fig. 3378, had defects that rendered it of little or no use in action. The instrument, Fig. 3378, consists of a vertical bar *f*, of metal, about 9 ft. (3 yds.) long, mounted upon a carriage in the form of a gun-carriage, as shown in the figure. Two quadrants *a b* are attached, one at each extremity of the metal bar, so that the centres of rotation of the movable limbs of the quadrants shall be exactly 9 ft. apart, and that the zeros of the instruments and the centres of rotation of the movable limbs shall be correctly in the same line. With the aid of a telescope, movable in the quadrants *a b*, mounted with level and micrometer screw, tangents of angles of elevation or depression can be almost instantly found with a high degree of accuracy. The axletree-boxes are raised so as to form small platforms for the observer at the higher level to place his feet upon, and there is a small rail in front, as shown in the figure, for him to rest his hand upon while observing. The lower extremity of the bar is about 3 ft. from the level of the ground, so that an observation can

be taken with what we term the quadrant on the lower level in a kneeling position. The bar and boxes rotate upon an axle placed a little above the lower quadrant, so as to admit of the bar being depressed when the observation is completed, the quadrant *a* falling into a small case fitted to receive it at B, and the quadrant at *b* fitting into a similar case near the point C. A handle and crank *d*, moving upon a circular bar *c c*, is attached, and there is a counterweight at C in order to facilitate the elevation and depression of the bar.

3378.

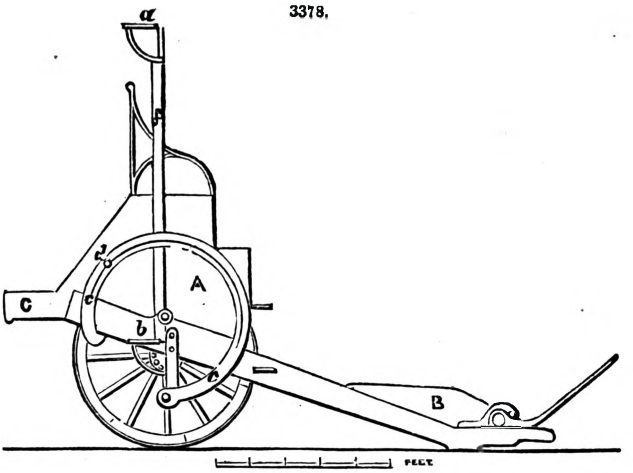

Use of the Instrument.—In Fig. 3378 the near wheel is removed as well as the axletree-box on the near side. The tangents of angles of depression of a distant point are taken at both levels and read off by the observers, the distance or range being thus calculated or worked out by means of a calculating instrument, as hereafter described, by a third man appointed for that purpose. The calculating instrument is shown in Fig. 3380, a small platform at B being constructed to work the calculating instrument upon.

If the radius or range of the quadrants *a b* equal 10 in., divided into tenths, and if the micrometer screw divides $\frac{1}{10}$ of an inch into 100 equal parts, then the 10-in. radius = 10000; such equal parts and the difference of the tangents of the two observed angles at *a* and *b* may be found to be $\frac{1}{10000}$ of an inch = ·0001 = 20″·6 nearly. If greater accuracy be required, and a $\frac{1}{10}$ vernier be applied to the micrometer screw, then the radius is taken = 100000 equal parts, and the tangents are measured to $\frac{1}{100000}$ of an inch = ·00001 = tangent of 2″ nearly.

3379.

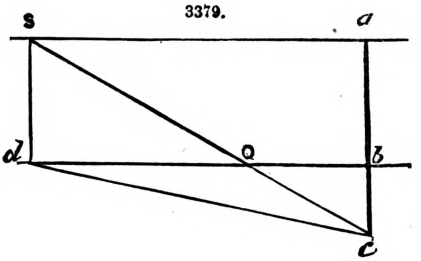

The principle upon which the instrument, Fig. 3378, works may be shown as follows;—

Let $\theta = \angle$ of observation at the higher level, *a s c*, Fig. 3379; $\theta' = \angle$ observed angle at the lower elevation, *b d c*; $r = s\,d$, the length of the vertical bar *a b*, Fig. 3378; R = *d b*, the horizontal range; *c* the position of the enemy's battery; then

$$s\,d : b\,c :: d\,o : o\,b;$$

$$\therefore\ s\,d : (s\,d + b\,c) :: d\,o : (d\,o + o\,b).$$

Since $s\,d = a\,b$, we have $(\tan.\theta - \tan.\theta') : \tan.\theta :: r \operatorname{cotan}.\theta : \mathrm{R}$;

$$r\,\frac{\tan.\theta \operatorname{cotan}.\theta}{\tan.\theta - \tan.\theta'} = \mathrm{R};$$

$$\therefore\ r\,\frac{1}{\tan.\theta - \tan.\theta'} = \mathrm{R}.$$

3330.

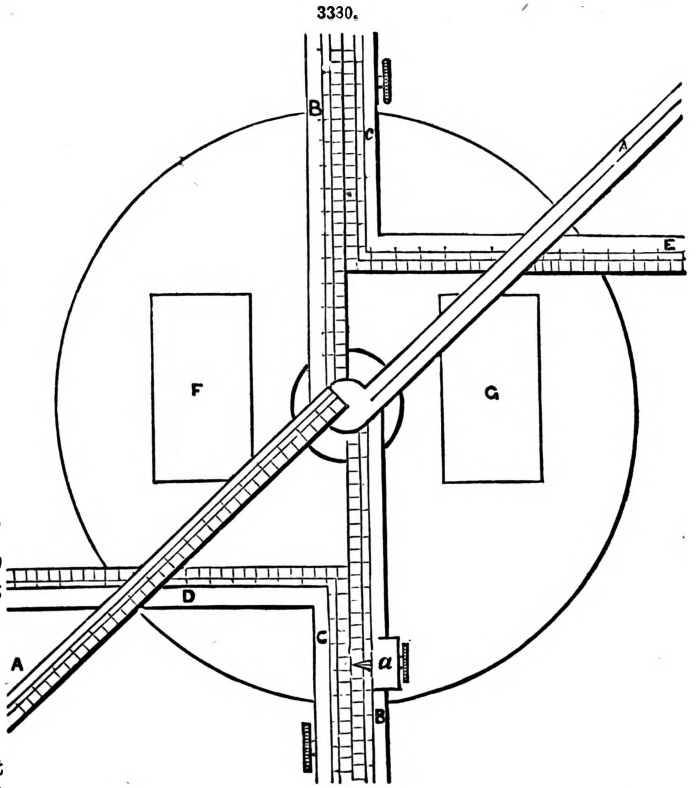

In this demonstration we put the radius = 1; but suppose the radius = 10000 equal parts, which we take as a whole number, then the horizontal range $\mathrm{R} = \frac{r \times 10000}{\tan.\theta - \tan.\theta'}$. Now if tan. θ measures 2 in. 4–10ths and 69 from the micrometer circle, and

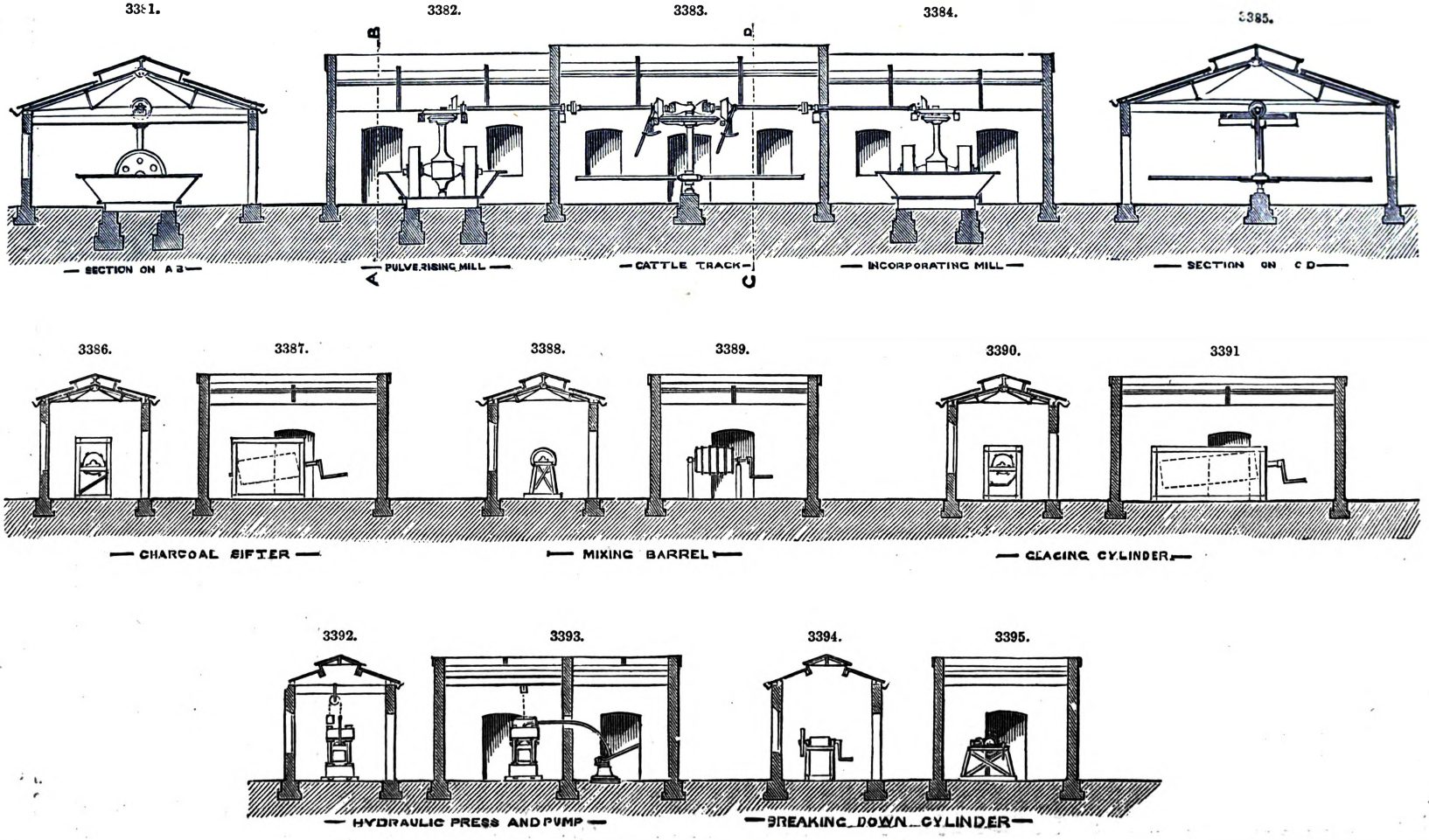
3381.
3382.
3383.
3384.
3385.
B
D
A
C
— SECTION ON A B —
— PULVERISING MILL —
— CATTLE TRACK —
— INCORPORATING MILL —
— SECTION ON C D —
3386.
3387.
3388.
3389.
3390.
3391
— CHARCOAL SIFTER —
— MIXING BARREL —
— GRAINING CYLINDER —
3392.
3393.
3394.
3395.
— HYDRAULIC PRESS AND PUMP —
— BREAKING DOWN CYLINDER —

tan. $\theta' = 2$ in. 4–10ths and 48 from the micrometer circle, then tan. θ − tan. $\theta' = 2469 - 2448 = 21$, and as $r = 3$ yds., we have $R = \frac{30000}{21} = 1429$ yds., the horizontal range very nearly. The calculating instrument before alluded to, Fig. 3380, forms a vast variety of similar triangles, which instantly give a fourth proportion to tan. θ − tan. θ', r, and 10. The divisions on the sides B, B; D, E, are all equal and not in logarithmic order. The calculating instrument consists of a circular disc F G attached to a vertical limb B B, upon which two horizontal limbs D and E, with clamping screws, slide vertically; upon the lower branch of the limb B B a small marker a, with clamping screw, slides vertically; a diagonal bar A A revolves upon the centre point of the circular disc; two small tables of tangents F and G are engraved upon the disc. The instrument is worked as follows;—While the first observation is being taken on the higher level, move the horizontal limb E to 10 on the upper branch of the vertical limb B B and clamp it; upon the observation at the higher level being taken and read off, move the marker a on the lower branch of the vertical limb B B to the number answering to tan. θ; upon the observation at the lower level being read off, move the horizontal limb D till the number answering to tan. θ' coincides with the number on the vertical limb B B indicated by the marker a, and clamp it. Bring the revolving diagonal bar to the number on the horizontal limb D corresponding to r. The upper arm of the diagonal bar will indicate a number which multiplied mentally by 10, 100, or 1000, according to the graduation of the instrument, will give the horizontal range. Nolan makes $r = \frac{b}{\sin.(\beta + \gamma)}$, and tries to obtain results by divisions put in logarithmic order on circular rings. Nolan's reasoning looks extremely scientific, but in practice all such performances are extremely ridiculous. See ANEMOMETER. ANGULAR MOTION. ARTILLERY. DAMMING. DYNAMOMETER. GUNPOWDER. GYRATION. ORDNANCE. OSCILLATION. PERCUSSION.

GUNPOWDER. FR., *Poudre à canon;* GER., *Schiesspulver;* ITAL., *Polvere da cannone;* SPAN., *Pólvora.*

The mechanical part of the manufacture of gunpowder is essentially the same in principle, and differs only to an immaterial extent in detail, whether in the various gunpowder mills in Great Britain or in those of the Continent.

The annexed engravings show a complete set of gunpowder machinery, manufactured for the Japanese Government by J. and H. Gwynne, of the Hammersmith Iron Works, London. In consequence of the objection to steam-power as increasing the danger of explosions, and the absence of sufficient water, it was found necessary to drive the mills by cattle-power.

Fig. 3381 shows a side view of the pulverizing mill, Fig. 3382 a front view of the same; Fig. 3383 shows the arrangement of the cattle track; Fig. 3384 the front view of the incorporating mill; Fig. 3385 is a side elevation of the cattle track; Figs. 3386, 3387, different views of the charcoal sifter; Figs. 3388, 3389, different views of the mixing barrel; Figs. 3390, 3391, different views of the glazing cylinder; Figs. 3392, 3393, different views of the hydraulic press and pump; Figs. 3394, 3395, different views of the breaking-down cylinder.

Figs. 3396 to 3402 exhibit another arrangement of gunpowder machinery, made for the Italian Government by J. and H. Gwynne. In this case water-power was available, and was thus made use of to drive the machinery by means of two turbine water-wheels, as shown. Figs. 3396, 3397, show a plan and section of the house containing the mills; Figs. 3398, 3399, show a section and plan of the house containing mixing barrels, glazing cylinders, machines for breaking down and sifting the gunpowder; Fig. 3400 is the packing house; Fig. 3401 the house containing hydraulic presses; Fig. 3402 the house for sifting charcoal. The houses are all made of as slight material as possible, so that in case of an explosion the powder has as little surface to act upon as possible, and are placed at such a distance apart so that the one may not be endangered by the other. The machinery in Figs. 3396 to 3402 is exactly similar to that in Figs. 3381 to 3395, but on a somewhat larger scale.

Figs. 3403 to 3406 give sectional views of the pulverizing and incorporating mill to a larger scale. This machine is made upon the latest and most improved construction, the rolls and pan being made of cast iron, which after many experiments has been found to be the most suitable material for the purpose; the upright and cross spindles are both made of wrought iron, working in gun-metal bearings at each end; the outside frame of the pan is made of wood, and the whole is worked from the main driving shaft by a pair of bevel-wheels, as shown in Fig. 3403. These details are necessary in order to explain the full working of the machinery.

The materials having been pulverized in the mill, Fig. 3381, are apportioned out, the following being the proportions used at the Government mills, Waltham Abbey, and also by other makers generally;—

	lbs.	oz.	drachms.
Saltpetre	31	8	0
Charcoal	6	4	13
Sulphur	4	3	3
	42	0	0

This quantity of the ingredients, termed a charge, is placed in the mixing apparatus, Figs. 3388, 3389, which consists of a wooden cylinder, traversed in its centre by an octagonal shaft provided with several fan-like arms. Both the shaft and cylinder are kept in motion, but in different directions. This latter arrangement so facilitates the commingling that the homogeneous powder is ready for removal and further manipulation in from five to ten minutes, when it is transferred to bags which are pressed, and the mouths of which are firmly secured, in order to prevent the disunion or separation of the ingredients in the order of their density during the transport to the incorporating mill. It is evident if the charges were too lightly packed the ingredients would be liable to be separated, the saltpetre finding its way to the bottom, while the

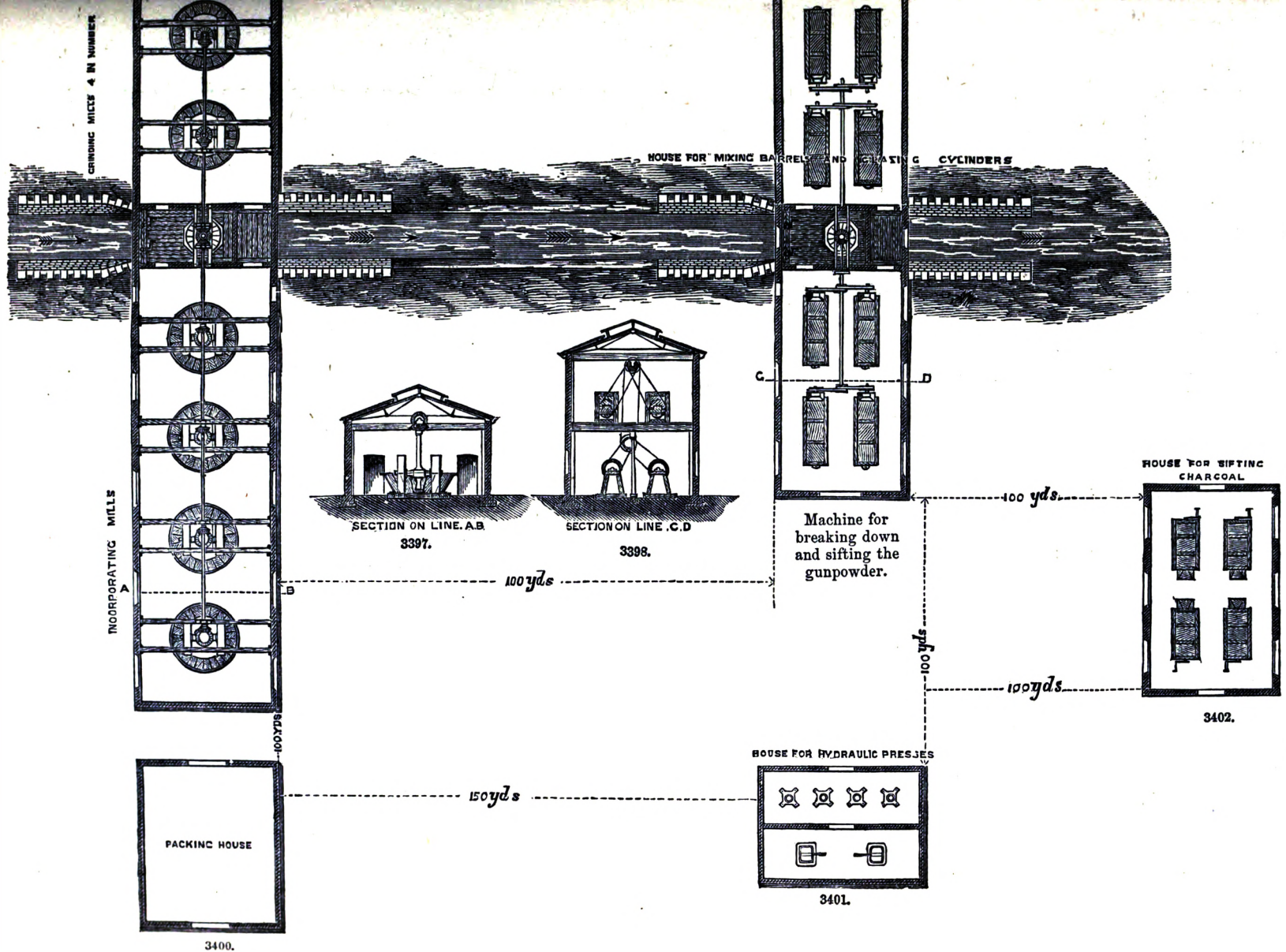
GRINDING MILLS 4 IN NUMBER
HOUSE FOR MIXING BARRELS AND GLAZING CYLINDERS
INCORPORATING MILLS
A
B
C
D
100 yds
100 yds
100 yds
100 yds
150 yds
SECTION ON LINE A.B
3397.
SECTION ON LINE C.D
3398.
Machine for breaking down and sifting the gunpowder.
HOUSE FOR SIFTING CHARCOAL
3402.
HOUSE FOR HYDRAULIC PRESSES
3401.
PACKING HOUSE
3400.

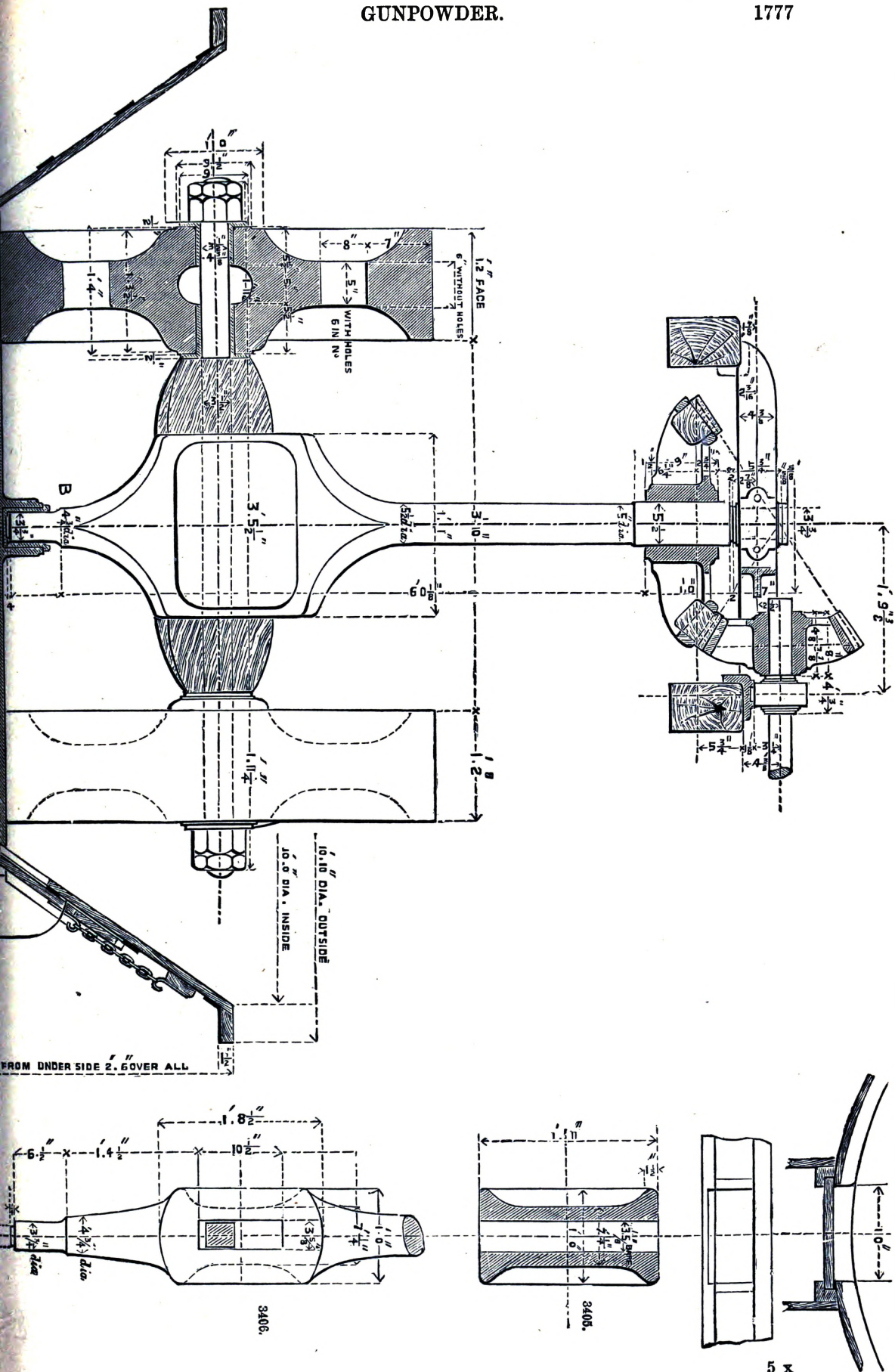
1.2 FACE
6" WITHOUT HOLES
5" WITH HOLES 6 IN No
B
10'.10" DIA. OUTSIDE
10'.0" DIA. INSIDE
FROM UNDER SIDE 2'.6" OVER ALL
3403.
3404.
3405.
3406.
5 x

sulphur and charcoal would form layers above, the latter, from its light pulverulent state, escaping in the form of dust between the fibres of the cloth of which the bag is formed.

The next process is the incorporation. The mixture is spread out upon the bed of the mill, Fig. 3384, and distilled water is added to ensure the intimate cohesion of the particles, and the whole is again submitted to the action of the mill to ensure the uniform pressure and bruising of the ingredients; but in this case the motion is less rapid than during the grinding of the ingredients. A great degree of caution must be exercised to prevent the intervention of any hard or silicious matters. The requisite amount of moisture must be maintained during the operation, and for this purpose water is slowly added at suitable intervals till the incorporation is complete, which is generally the case at the expiration of from three to four hours.

The compound has now the properties of gunpowder; it indurates in a very short period, forming hard cakes, termed mill-cake. When it has lost some of its moisture, but before it becomes completely dry, it is passed between the breaking-down cylinder, Figs. 3394, 3395, and is then submitted, between copper plates placed in strong boxes, to hydraulic pressure of about 150 tons to the sq. ft., in the press house, Figs. 3392, 3393.

The powder has now to be granulated, and for this purpose it is placed in the breaking cylinder, Figs. 3394, 3395, and afterwards sifted by hand to the various degrees of fineness. The finest powder is then placed in the glazing cylinder, Figs. 3390, 3391, in a slightly moist state, and revolved very slowly, so that the grains become polished by attrition. The gunpowder is finally dried, which is now generally done by means of steam heat, and sometimes by a current of air, previously heated in another chamber from 130° to 150°, passing over the powder placed on canvas shelves.

On Fig. 3403 the footstep B will have to be covered with wood, in order to prevent the grains of powder being exploded from getting between the shaft and brass.

By mixing intimately saltpetre with charcoal or with sulphur, we obtain substances which, when subjected to a high temperature, deflagrate and suddenly develop a large volume of gas. When the combustion takes place in a contracted space considerable pressure is exerted on the surrounding walls of this space, and if one of these be movable, it may be projected with more or less force.

If, for example, 1 equivalent of nitre KO,NO_5 is mixed with 1 equivalent of carbon, there are produced, by detonation, 1 equivalent of carbonate of potassa, 1 equivalent of nitrogen, and 3 equivalents of oxygen; $KO,NO_5+C=KO,CO_2+N+3O$; 2 volumes of nitrogen and 3 of oxygen will therefore be disengaged.

We may calculate by approximation the volume of gas developed by one volume of the detonating mixture. 1 equivalent of nitrate of potassa weighing 1264·3, and 1 equivalent of carbon weighing 25·0, the weight of the mixture will therefore be 1339·3. Assuming that this pulverized mixture occupies the same volume as an equal weight of water, we can admit that a weight 1339·3 grammes of the mixture will occupy a volume of 1·339 lit. Now, this weight of the mixture develops 1 equivalent = 175 of nitrogen, and 3 equivalents = 300 of oxygen.

1 lit. of nitrogen, at 32°, under a pressure of 0·760 m., weighs 1·257 gramme.
1 „ oxygen „ „ „ „ 1·429 „

The volume occupied by the nitrogen at 32°, and under a pressure of 0·760 m., will be given by the proportion $1·257 : 1·000 :: 175 : x$, whence $x = 139·2$ lit. The volume occupied by the disengaged oxygen under the same circumstances will be deduced from the proportion

$$1·429 : 1·000 :: 300 : y, \text{ whence } y = 209·9 \text{ lit.}$$

Thus a volume of detonating mixture represented by 1·339 lit. yields 349·1 lit. of gas at 32°, and under a pressure of 0·760 m.—a volume 253 times greater than that of the explosive substance. The volume of gas, at the moment of development, is really much larger than we have just found, being strongly dilated by the high temperature produced by the combustion; and we may safely admit that the expansion is at least three times greater than that given by calculation, when the gas was supposed to have a temperature of 32°.

If 1 equivalent of nitrate of potassa is mixed with 2 equivalents of carbon, then 1 equivalent of carbonate of potassa, 1 equivalent of nitrogen, 1 of carbonic acid, and 1 of oxygen are formed; $KO,NO_5+2C=KO,CO_2+N+CO_2+O$. The equivalent of carbonic acid being represented by 2 volumes, it will be seen that 5 volumes of gas are still disengaged; that is, that the expansion is the same as in the preceding case. The projectile force may, however, be greater if a high temperature be developed during the combustion.

Lastly, if 4 equivalents of carbon are added to 1 equivalent of nitre, then 1 equivalent of nitrogen and 3 equivalents of oxide of carbon are disengaged; $KO,NO_5+4C=KO,CO_2+N+3CO$. 1 volume of oxide of carbon containing only a ½ volume of oxygen, it is evident that 6 volumes of oxide of carbon will be developed; the gaseous volume will therefore be equal to 8. Thus there will be a greater production of gas than in the two preceding cases. The projectile force might, however, be less, if the heat developed be not so great. Moreover, in the mixture we have just supposed, a great portion of the carbon does not ignite.

Mixtures of nitre and sulphur also produce, by detonation, considerable volumes of gas. Thus a mixture of 1 equivalent of nitre and 1 equivalent of sulphur yields 1 equivalent of sulphate of potassa, 1 equivalent of nitrogen, and 2 equivalents of oxygen; $KO,NO_5+S=KO,SO_3+N+2O$; 4 volumes of gas will therefore be formed.

With 1 equivalent of nitre and 2 equivalents of sulphur we have

$$KO,NO_5+2S=KO,SO_3+N+SO_2;$$

that is, again 4 volumes of gas; for the equivalent of sulphurous acid is represented by 2 volumes.

A mixture of 1 equivalent of nitre with 4 equivalents of sulphur gives

$$KO,NO_5+4S=KS+N+3SO_2;$$

2 volumes of nitrogen and 6 volumes of sulphurous acid will therefore be disengaged; in all, 8 volumes of gas. In fact, however, the gaseous volume is less considerable, owing to the incomplete combustion of the sulphur.

Mixtures of nitre and carbon generally produce a greater volume of gas than mixtures of nitre and sulphur; but the latter have the advantage of being more combustible.

Experiments have proved that the mixtures possessing the greatest projectile force consist of nitre, carbon, and sulphur. A mixture of

1 equivalent of nitre	1264	66·0
1 equivalent of sulphur	200	10·5
6 equivalents of carbon	450	23·5
	1914	100·0

gives $KO,NO_5+S+6C=KS+N+6CO$; that is, 14 volumes of gas. But in reality the gaseous volume is less considerable, because a large portion of the carbon escapes combustion, and the temperature does not rise very high.

The following mixture possesses a greater projectile force;—

1 equivalent of nitre	1264	74·8
1 equivalent of sulphur	200	11·9
3 equivalents of carbon	225	13·3
	1689	100·0

We then have $KO,NO_5+S+3C=KS+N+3CO_2$, with the disengagement of 8 volumes of gas.

We may calculate by approximation the volume of gas produced by a volume (1) of this mixture. Let us again admit that the mixture occupies the same volume as an equal weight of water. We shall say that 1689 grammes of the mixture, or a volume of 1·689 lit., disengages 175 grammes of nitrogen = 139·2 lit., and 825 grammes of carbonic acid = 417·3 lit.; total gaseous volume = 556·5 lit. A volume (1) of the detonating mixture will therefore produce 329 times its volume of gas at 32° and under a pressure of 0·760 m. of mercury.

The numerous experiments made in all countries to discover empirically the best composition for powder show that it should be as approximate as possible to that just now theoretically developed.

In France three different compositions are in use.

For war powder—

Saltpetre	75·0
Sulphur	12·5
Charcoal	12·5
	100·0

For sporting powder—

Saltpetre	76·9
Sulphur	9·6
Charcoal	13·5
	100·0

For blasting powder—

Saltpetre	62·0
Sulphur	20·0
Charcoal	18·0
	100·0

Prussian war powder shows the following composition—

Saltpetre	75·0
Sulphur	11·5
Charcoal	13·5
	100·0

English and Austrian war powder—

Saltpetre	75·0
Sulphur	10·0
Charcoal	15·0
	100·0

Swedish war powder—

Saltpetre	75·0
Sulphur	16·0
Charcoal	9·0
	100·0

Chinese powder—

Saltpetre	75·7
Sulphur	14·4
Charcoal	9·9
	100·0

French blasting powder is the only one which differs remarkably from the theoretical composition just indicated; this is because a great projectile force is not required, and the Government, which imposes a considerable tax on sporting powder, endeavours to manufacture a blasting powder such that it cannot be substituted for the former. This powder has, indeed, less strength, and fouls the gun very rapidly.

Powder should satisfy several conditions, which vary according to the weapon in which it is to be used. When it is very explosive, and the explosion of the charge is instantaneous, the reaction on the walls of the weapon is sudden and violent, frequently causing the weapon to burst; the powder is then said to be too *explosive*. If the powder is not sufficiently explosive, the projectile is thrown from the weapon before all the charge is burned; a portion of the latter, therefore, is uselessly inserted and wasted. The powder most suitable for any given weapon is that which, burning perfectly whilst the projectile passes through the chamber of the piece, communicates to it, gradually, and not instantaneously, the whole projectile force of which it is capable. Hence

the quality of the powder must vary according to the nature of the piece in which it is used. With equal quantities of the ingredients the quality of the powder can still be altered, by using charcoal more or less carbonized, by giving the substance a greater or less degree of compactness, or by varying the size of the grain.

Before proceeding to study the manufacture of the various kinds of powder, we shall investigate the preparation of its primary components.

Saltpetre.—The saltpetre used in the manufacture of powder is the refined nitre. This nitre is remarkably pure, and rarely contains more than two or three thousandths of sea-salt. It comes from the refinery in very small crystalline grains, and in this state is used in the manufacture of powder.

Sulphur.—Powder mills purchase the refined sulphur in rolls. It must be reduced to an impalpable powder, which is effected in wooden drums, Figs. 3407, 3408, having on the inside wooden brackets *a*, *b*, arranged along the edges of the cylinder. These drums are cylindrical, and about $1^m \cdot 10$ long, with a diameter of about $1^m \cdot 15$: they revolve on a horizontal iron axis O O'. Through a door *a b c d*, which is furnished with iron handles *m' m*, the material is introduced. Pulverization is effected by means of small brass balls, of about 5 or 8 millimètres in diameter, of which each drum contains 150 kilogrammes: 30 or 40 kilogrammes of sulphur are added, and the drum is made to revolve for six hours, during which time the balls, rolling with the sulphur, crush it and reduce it to extreme fineness. In order to withdraw the sulphur, the door of the drum is removed, and replaced by a similar door *a b c d*, the panels of which are of wire gauze, Fig. 3409; by causing the drum to revolve five or six times, the sulphur escapes through this door, leaving the balls in the drum.

3407.

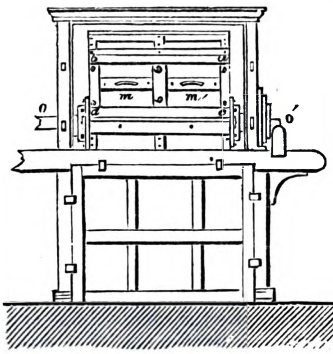

3408.

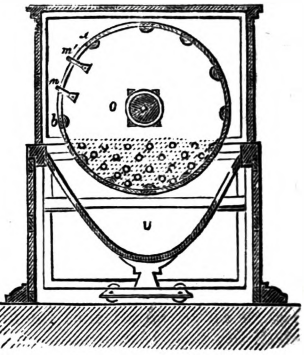

3409.

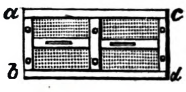

The powdered sulphur is sifted in a bolting machine, similar to that used for bolting flour; the particles which have not been sufficiently pulverized are thus separated, as well as any small grains of sand, which might occasion accidents in the manufacture of the powder.

The charcoal destined for the fabrication of powder must be most carefully selected. All kinds of wood are not suitable for the preparation of this charcoal: the tender and light woods, which yield a friable, porous charcoal, leaving very little ash, are preferred.

The woods most esteemed are the black alder and spindle-tree: poplar and chestnut may also be used. Hemp stalks, likewise, yield a very good charcoal.

The wood of the black alder is exclusively used in France. The branches of about 15 or 20 millimètres in diameter are preferred; and if larger branches are used, they are first split. The bark is always removed, as it gives too much ash. These branches are cut into lengths of from $1 \cdot 5$ to 2 mètres, and tied in bundles weighing from 12 to 15 kilogrammes.

The carbonization is never effected in kilns, as common charcoal is made, but in pits or in cylinders.

Carbonization in Pits.—Cylindrical pits, about $1^m \cdot 5$ in diameter and $1^m \cdot 2$ in depth, are excavated in the earth and lined with bricks, and filled with the wood, cut into pieces of $0^m \cdot 30$ in length, until the heap rises to the height of a few decimètres above the mouth of the pit. Fire is communicated through a hole at the bottom; and as the combustion advances, the branches are raised with a fork, so as to allow the fire to be regularly distributed. The pile gradually sinks, and fresh wood must be added to keep the pit full. When a flame is no longer seen, the mouth of the pit is hermetically closed by a sheet-iron lid, and the carbonization is then finished without access of air. The pit remains closed for three or four days, in order entirely to extinguish and cool the charcoal. It is then opened, the charcoal removed, and conveyed to the sorting room, where it is most carefully sorted by hand; such branches as have not been sufficiently carbonized and the half-burnt pieces are rejected, as also those which are too much carbonized, and therefore would make bad powder. The good charcoal should be used immediately, as it sensibly deteriorates by exposure to the moist air.

By carbonization in pits, about 18 to 20 per cent. of charcoal is obtained.

Carbonization in Cylinders.—This process yields a much larger proportion of charcoal; its quality is also more constant and uniform, because the fire can be regulated at will, and the carbonization can be arrested at the proper moment.

The cylinders C, C, Figs. 3410, 3411, are arranged in pairs in the same furnace: they are made of cast iron, having 2 mètres in length and about $0^m \cdot 70$ in diameter. One end of the cylinder is closed by a cast-iron lid, having four circular openings, through which pass four sheet-iron tubes, as *p q*, *m n*. Three of these tubes, which serve for the introduction of sticks of wood, are closed externally with wooden plugs, which can be withdrawn from time to time, so as to observe the progress of the carbonization. The fourth is open, and gives exit to the gases which are evolved during the process. A curved copper tube *n o* is fitted to one end of it, opening above a funnel *v*,

which communicates with a horizontal canal T, ranging along the furnace and opening into the chimney. There are generally twelve furnaces arranged in the same mason-work.

The combustible is placed on the grate *d*, the flame and smoke ascend between the two cylinders, surround them, and descend by vertical pipes *u* and *u'* into a horizontal canal V V', which extends under all the furnaces, and opens into a chimney built in the middle of the room. The heat around each cylinder is regulated by registers *r* and *r'*, in the vertical pipes *u* and *u'*. The part *a b c* of the cylinders which is more immediately exposed to the action of the fire is covered with a luting of broken tiles and clay. The maximum of temperature is thus found at the top of the cylinders, favouring greatly the progress of the operation.

3410.

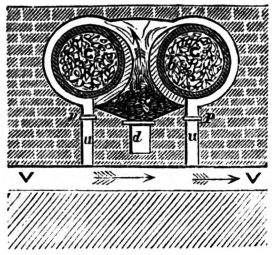

3411.

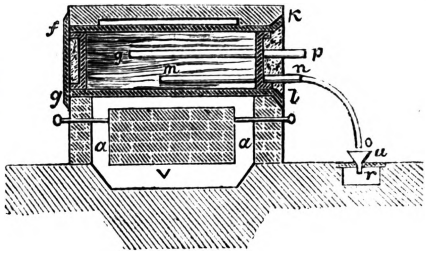

The sticks of wood to be carbonized are about $1^{m} \cdot 5$ in length: when the cylinders are filled with them, the movable end *f g h i* is replaced. This end is made of two sheets of iron, the space between which is filled with ashes; assay sticks are then introduced into the tubes *p q*, *m n*.

When the cylinders are charged, fire is kindled on the grate: turf is the fuel generally used. Active decomposition of the wood does not begin under four or five hours. The progress of the operation is estimated by the quantity and colour of the smoke which escapes from the pipe *n o*. When the carbonization is supposed to be advancing, the assay sticks are withdrawn, and an opinion formed from their appearance of the progress of decomposition in the various parts of the cylinders: if it be more advanced in some parts than in others, the combustible is pushed to the side where the carbonization is slowest. The heat is also regulated by the registers *r* and *r'*. In eleven or twelve hours, no vapour escapes any longer from the pipe *n o*; the operation is then terminated, the registers are closed, and the carbonization is completed without further aid. On the following day, the charcoal is withdrawn and placed in sheet-iron extinguishers (étouffoirs).

Carbonization in cylinders yields from 35 to 40 per cent. of charcoal, which is sorted by hand, and broken into small pieces.

The carbonization is not carried so far when the charcoal is intended for sporting powder: it is then withdrawn in the state of *red charcoal* (charbon roux); its colour then is brown. For war powder the carbonization is pushed further, to the state of *black charcoal* (charbon noir), called also *distilled charcoal*. Powder made with red charcoal would be too explosive for muskets or artillery.

Manufacture of Round Powder by the Bernese Process.—Blasting powder is made in France by a peculiar process, first used at Berne, whence it has obtained the name of *Bernese process*. This process is also applied to the manufacture of cannon and musket powder.

For blasting powder, the more highly-burned charcoal, which is unfit for other powder, is used: the great degree of calcination is in this case not injurious to the quality of the powder, as blasting powder should not possess too great an inflammability.

Six different operations may be distinguished in the manufacture—pulverization, mixing, graining, equalization, glazing, and drying.

The pulverization is effected by bronze balls in iron drums, exactly as has been previously described, with the only difference that at the same time balls of $4^{m} \cdot 5$ in diameter, and some varying from 7 to 15 mm., are used, the charcoal being more difficult to grind. The drum contains 120 kilogrammes of these balls, with 30 kilogrammes of sulphur and 27 of charcoal, which is the proportion for 150 kilogrammes of powder. The door is closed, and the drum made to revolve for four hours, at the rate of from twenty-five to twenty-eight revolutions a minute: the binary mixture, being then sufficiently ground, is removed from the drum.

The further mixture is then made as follows;—14·25 kilogrammes of the substance taken from the drum, exactly weighed, are placed in a barrel, and 23·25 kilogrammes of saltpetre added. Each barrel then contains 37·50 kilogrammes of the compound, namely;—

Saltpetre	23·25	62·0
Sulphur	7·50	20·0
Charcoal	6·75	18·0
	37·50	100·0

This compound is carried to the mixing machine, which are leather drums, containing 60 kilogrammes of bronze balls of $4^{mm} \cdot 5$ in diameter. The 37·50 kilogrammes of it are introduced, and the machine made to revolve at the rate of twenty-five or thirty revolutions a minute. After four hours' working, the compound is well mixed; the material is then conveyed into a maie, and placed in barrels to be carried to the graining house.

The machine, Fig. 3412, used for the manufacture of round grains consists of two large oak drums A E G B, C H F D, $1^{m} \cdot 75$ in diameter, and $0^{m} \cdot 63$ in height. Each of them has only one entire end B E, C F: the opposite end A G, H D, being furnished with a circular opening U of

$0^m \cdot 60$ diameter in the centre. The two drums are traversed by the same iron axes I O, supported between two strong vertical beams by two copper chains. Two copper discs $a\,a'$, $b\,b'$, fixed on the iron axis, connect the transverse iron axis I O with the ends E B and C F of the drum, while four strong cross-pieces, as A B, keep the whole steady. Each drum has a door M, of $0^m \cdot 35$ by $0^m \cdot 60$, closed with four copper screws, and used for introducing and withdrawing the material. All the lower part of the machine is surrounded by a large trough N, furnished with inclined copper planes, intended to receive the material when withdrawn by the doors, and conduct it into barrels placed beneath.

The drum A E G B is used for graining, and the other C H F D for glazing the powder.

3412.

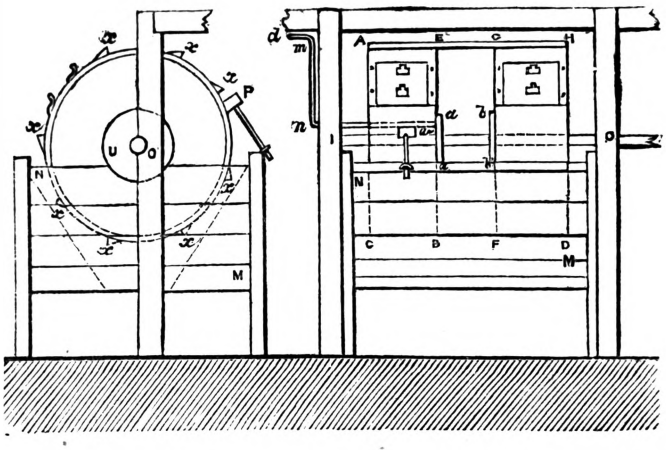

3413.

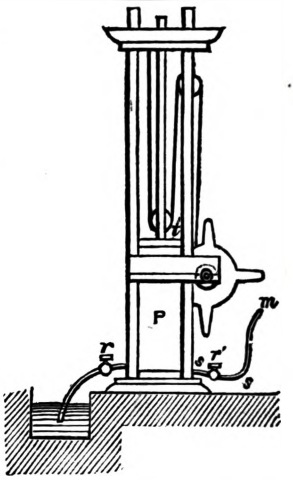

The outer periphery of the granulator A E G B is furnished with twelve small cleats x, x, x, which, during the movement of the drum, move, and cause a small wooden hammer p, fastened by a cord to the side of the trough N, to strike constantly on its surface, detaching, by its blows, any portion of the material which might adhere to the drum. A copper watering tube $n\,u$, 2 centim. in diameter, and $0^m \cdot 40$ in length, having one side pierced with very minute holes, enters the granulating machine, a little above its axis, and communicates, by a curved copper tube $n\,m\,s$, with a forcing pump. This pump, Fig. 3413, is composed of a copper pump-tree P, in which a perfectly well-fitting piston moves: an iron rod $t\,t'$, fastened to the upper part of the piston, works between two wooden uprights. The piston is set in motion by means of a winch and a rope which passes over a pulley fixed to the iron rod. The lower part of the pump-tree communicates, on the one hand, with a reservoir of water, and, on the other, with the injecting tube $s\,m\,n\,u$; two stop-cocks r, r', closing at will the communicating tubes. When the stopcock r is opened and the piston raised, the lower part of the pump fills with water: if this stopcock be closed and that at r' opened, the piston descends by its own weight, allowing the water to escape through the watering tube $s\,m\,n\,u$.

In order to introduce a charge of the material, the workman removes the door M of the granulating machine, and pours in 100 kilogrammes of powder already grained, called the *nucleus* (noyau), the origin of which will be hereafter explained; he replaces the door, and sets the machine in motion at the rate of ten revolutions a minute. During this motion, the first sprinkling of 5 per cent. of water is made; the fluid thus wetting the nucleus which occupies the lower part of the granulating machine in the form of a fine rain, and the rotary motion of the drum constantly renewing the surface, all the grains are uniformly moistened.

When the first sprinkling is over, he introduces through the opening U 50 kilogrammes of the mixture as it comes from the mixing machine, inserting 1 kilogramme at a time with a wooden shovel, spreading it as evenly as possible in the drum. The movement of the machine rolling the damp grains constantly among the dry meal powder causes the latter to adhere to their surface, and each grain thus to increase by concentric layers.

Immediately after, a second sprinkling is made, and then 50 kilogrammes of the ternary mixture are gradually added. After allowing the machine to revolve for a quarter of an hour, the workman ascertains if the meal powder is entirely absorbed; he then empties the machine, by dropping the material into barrels placed underneath. These operations last from thirty-five to forty minutes.

The material, when taken from the machine, is composed of variously-sized grains, which require to be separated, or *equalized*. This is done by shaking the grains over two leather sieves; the first, called the *equalizer* (égalisoir), separates those grains which are too large, while the second, the *sub-equalizer*, allows those which are too fine to pass through. The holes in the equalizer are $3^{mm} \cdot 4$ in diameter. The grains and irregular pieces which do not pass through are set aside; those which pass through are sifted on the sub-equalizer, the holes of which are $1^{mm} \cdot 2$ in diameter. There remain on the latter sieve those grains the diameter of which is comprised between $1^{mm} \cdot 2$ and $3^{mm} \cdot 4$, and which are suitable for blasting; they are deposited in a barrel to undergo a subsequent operation. All which passes through the sub-equalizer is composed of grains smaller than $1^{mm} \cdot 20$; it is considered as a *nucleus*, because this grain need only be increased in the granulating machine to make it of the proper size. As each operation yields the quantity of nucleus necessary

for a succeeding operation, it is sufficient to obtain some for the first operation, for which the angular powder, of the size of musket powder prepared in the stamping machine, is employed. The grains which are too large, and the irregular pieces which remained on the equalizer, are broken by means of the cake, and used as a nucleus for the succeeding operation.

Blasting powder is glazed as well as sporting powder, in order to increase its density. This operation is effected in the second drum C H F D. 200 kilogrammes of equalized grains are introduced, and it is turned for four hours; by direct experiment it is ascertained when the grain has acquired sufficient density. For this purpose 60 grammes of the glazed grains are poured into a graduated test-glass; the grain is considered as sufficiently glazed when the level of the material rises to a certain division in the instrument. The glazed grain is dried in the ordinary way.

Round war powder is manufactured by the same method, the usual proportion of the ingredients for war powder, 25 of saltpetre, 12·5 of sulphur, and 12·5 of charcoal being employed. Two kinds of equalized grains are separated; those of which the diameter is between $1^{mm}\cdot2$ and $2^{mm}\cdot1$ constituting cannon powder; and musket powder, the diameter of the grains of which varies from $1^{mm}\cdot0$ to $1^{mm}\cdot20$.

Analysis of Powder.—The analysis of powder is a tedious and delicate operation, when the proportions and nature of its components are to be ascertained very exactly. The first operation is to determine the proportion of hygrometric water the powder contains, for which purpose a known weight of powder is exposed for several days in a dry vacuum, and the loss it experiences ascertained; or else the substance is placed in a U-shaped tube, kept at a temperature of 60° or 70°, and traversed by a current of dry air.

Ten grammes of dry powder are then treated with hot water, which dissolves the nitrate of potassa. The insoluble residue, composed of sulphur and charcoal, is collected on a small filter, which has been previously dried and weighed. When this residue has been properly washed, it is dried with the filter at a moderate temperature, and weighed; by subtracting from this weight that of the filter above, the weight of the sulphur and charcoal is obtained. After separating, as carefully and completely as possible, the substance from the filter, it is again weighed in a small bottle and treated with sulphuret of carbon, which may be mixed with an equal volume of ether, without too much impairing its solvent power. The charcoal which remains isolated is collected on a small filter previously dried, and weighed after a second desiccation, after having been well washed in a mixture of sulphuret of carbon and ether. The weight of the sulphur is thus obtained by the difference. It may, however, also be weighed directly after evaporating, at a low temperature, the solvent which contains it. The charcoal of the powder is not pure carbon; it contains, as the carbonization is always imperfect, a considerable proportion of oxygen and hydrogen; but, as the chemical nature of the charcoal exerts great influence on the quality of the powder, it is important, in an accurate analysis, to ascertain the amount of carbon exactly. An idea may be formed of the composition of charcoal by the following numbers, obtained from the analysis of the red charcoal used in the manufacture of sporting powder;—

Carbon	71·42
Hydrogen	4·85
Oxygen and nitrogen	22·91
Ashes	0·82
	100·00

The quantity of sulphur contained in powder may also be determined by operating directly on the powder itself. To effect this 10 grammes of dry powder are dissolved in a small quantity of hot water, nitric acid is added, and, after allowing the fluid to boil, small quantities of chlorate of potassa are gradually introduced. Under the influence of these oxidizing agents the sulphur is dissolved in the state of sulphuric acid, which is precipitated, after the liquid is filtered, by chloride of barium. The precipitate is allowed to settle, the clear liquid poured on a filter, and the precipitate, after being boiled for a few moments with chlorohydric acid, to dissolve the nitrates it might contain, is collected on the same filter and weighed after calcination.

Ten grammes of dry powder may also be mixed with an equal weight of nitrate of potassa and four or five times its weight of chloride of sodium; the mixture being thrown, in small quantities at a time, into a platinum crucible, deflagrates slowly, without any loss of the material. It is subsequently treated with water, and the sulphuric acid is precipitated by chloride of barium, after supersaturating the liquid with chlorohydric acid.

It has also been proposed to dissolve the sulphur of the mixture of sulphur and charcoal, by a solution of monosulphide of sodium, or of hyposulphite of soda; but this process is useless, because the charcoal, being always considerably attacked by these alkaline liquids, gives off a peculiar acid, called *ulmic acid*.

Very frequently only the quantity of saltpetre contained in powder is to be ascertained. This is easily done by treating 50 grammes of powder with 200 grammes of hot water, and filtering the liquid into a test-glass having a mark at the level corresponding to 500 cubic centimètres. The material is washed with water on a filter until the filtrate reaches the level. The liquid is then cooled to 60°, the contraction it undergoes by cooling being compensated by the addition of a small quantity of water; it is then well shaken to render it homogeneous, and a peculiar areometer, graduated so that its level will mark immediately the hundredths of nitrate of potassa contained in the 50 grammes of powder, is dipped in. In this manner the proportion of nitrate of potassa may easily be determined, to very nearly a half-hundredth.

Gun-cotton.—The chemical constitution of gun-cotton has been conclusively established by the researches of Hadow. In the formation of substitution-products by the action of nitric acid upon cotton or cellulose, three atoms of the latter appear to enter together into the chemical change, and

the number of atoms of hydrogen replaced by peroxide of nitrogen in the treble atom of cellulose $C_{18}H_{30}O_{15}=3(C_6H_{10}O_5)$ may be nine, eight, seven, or six, according to the degree of concentration of the nitric acid employed.

The highest of these substitution-products is trinitro-cellulose, pyroxilin, or gun-cotton—$C_{18}\left\{\begin{matrix}H_{21}\\9NO_2\end{matrix}\right\}O_{15}=3\,C_6\left\{\begin{matrix}H_7\\3NO\end{matrix}\right\}O_5$; this being the substance first produced by Pelouze in an impure condition, in 1838, by the action of very concentrated nitric acid upon paper, or fabrics of cotton or linen, and afterwards obtained in a purer form by Schönbein, who employed a mixture of concentrated nitric and sulphuric acids for the treatment of cotton-wool; the object of the sulphuric acid being to abstract water of hydration from the nitric acid, and also to prevent the action of the nitric acid from being interfered with by the water which is produced as the chemical transformation of the cotton into gun-cotton proceeds. The formation of trinitro-cellulose is represented by the following equation;—

$$C_6H_{10}O_5+3\left\{\begin{matrix}H\\NO_2\end{matrix}\right\}O=C_6\left\{\begin{matrix}H_7\\3NO_2\end{matrix}\right\}O_5+3\left\{\begin{matrix}H\\H\end{matrix}\right\}O.$$

Cotton. Nitric Acid. Gun-cotton. Water.

The lowest substitution-product for cotton, of those named above, appears to have the same composition as the substance which Braconnet first obtained in 1832, by dissolving starch in cold concentrated nitric acid, and adding water to the solution, when a white, highly-combustible substance is precipitated, to which the name of *Xyloïdin* was given. The substitution-products from cotton, intermediate between the lowest and highest, are soluble in mixtures of ether and alcohol, and furnish by their solution the important material *collodion*, so invaluable in connection with photography, surgery, experimental electricity, and so on.

According to Schönbein's original prescription, the cotton was to be saturated with a mixture of one part of nitric (sp. gr. 1·5) and three parts of sulphuric acid (sp. gr. 1·85), and allowed to stand for one hour. In operating upon a small scale, the treatment of cotton with the acid for that period is quite sufficient to effect its complete conversion into the most explosive product *pyroxilin*, or *trinitro-cellulose*; but when the quantity of cotton treated at one time is considerable, especially if it is not very loose and open, its complete conversion into pyroxilin is not effected with certainty unless it be allowed to remain in the acid for several hours. This accounts in great measure for the want of uniformity observed in the composition of gun-cotton and its effects as an explosive in the earlier experiments instituted; and it is moreover very possible that the want of stability and consequently even some of the accidents which it was considered could only be ascribed to the spontaneous ignition of the material, might have been due to the comparatively unstable character of the lower products of substitution, some of which existed in the imperfectly-prepared gun-cotton.

The system of manufacture of gun-cotton elaborated by General von Lenk is founded upon that described by Schönbein; the improvements which the former has adopted all contribute importantly to the production of a thoroughly uniform and pure gun-cotton; there is only one step in his process which is certainly not essential, and about the possible utility of which chemical authorities are decidedly at variance with General von Lenk.

The following is an outline of the process of manufacture of gun-cotton as practised by Lenk. See Atomic Weights. The cotton, in the form of loose yarn of different sizes, made up into hanks, is purified from certain foreign vegetable substances by treatment for a brief period with a weak solution of potashes, and subsequent washing. It is then suspended in a well-ventilated hot-air chamber until all moisture has been expelled, when it is transferred to air-tight boxes or jars, and at once removed to the dipping tank, or vessel where its saturation with the mixed acid is effected. The acids of the specific gravity prescribed by Schönbein are very intimately mixed in a suitable apparatus in the proportions originally indicated by that chemist; that is, three parts by weight of sulphuric acid to one of nitric acid. The mixture is always prepared some time before it is required, in order that it may become perfectly cool. The cotton is immersed in a bath of the mixed acids, one skein at a time, and stirred about for a few minutes, until it has become thoroughly saturated with the acids; it is then transferred to a shelf in this dipping trough, where it is allowed to drain, slightly pressed to remove any large excess of acid, and afterwards placed in an earthenware jar, provided with a tightly-fitting lid, which receives six or eight skeins, weighing from 2 to 4 oz. each. The cotton is tightly pressed down in the jar, and if there be not sufficient acid present just to cover the mass, a little more is added: the proportion of acid to be left in contact with the cotton being about 10½ lbs. to 1 lb. of the latter. The charged jars are set aside for forty-eight hours in a cool place, where they are kept surrounded by water to prevent any elevation of temperature and consequent destructive action of the acids upon the gun-cotton. The same precaution is also taken with the dipping trough, as considerable heat is generated during the first saturation of the cotton with the acids. At the expiration of forty-eight hours the gun-cotton is transferred from the jars to a centrifugal machine, by the aid of which the excess of acid is removed as perfectly as is possible by mechanical means, the gun-cotton being afterwards only slightly moist to the touch. The skeins are then immersed singly in water, and moved about briskly, so as to become completely saturated with it as quickly as possible. This result is best accomplished by plunging the skeins under a fall of water, so that they become at once thoroughly drenched. If they are simply thrown into the water and allowed to remain at rest, the heat produced by the union of a portion of the free acids with a little water would be so great as to establish at once a destructive action upon the gun-cotton by the acid present. The washing of the separate skeins is continued until no acidity can be detected in them by the taste; they are then arranged in frames or crates and immersed in a rapid stream of water, where they remain undisturbed for two or three weeks. They are afterwards washed by hand to free them from mechanical impurities derived from the stream, and are immersed for a short time in a dilute

boiling solution of potashes. After this treatment, they are returned to the stream, where they again remain for several days. Upon their removal they are once more washed by hand, with soap if necessary; the pure gun-cotton then only requires drying by sufficient exposure to air at a temperature of about 27° C. to render it ready for use. A supplementary process is, however, adopted by General von Lenk, about the possible advantage or use of which his opinion is not shared by others. This treatment consists in immersing the air-dried gun-cotton in a moderately strong hot solution of soluble glass (silicate of potassa or soda) for a sufficient period to allow it to become completely impregnated, removing the excess of liquid by means of the centrifugal machine, thoroughly drying the gun-cotton thus silicated, and finally washing it once more for some time until all alkali is abstracted. Lenk considers that by this treatment some silica becomes deposited within the fibres of the gun-cotton, which, on the one hand, assists in moderating the rapidity with which the material burns; and, on the other hand, exercises (in some not very evident manner) a preservative effect upon the gun-cotton, rendering it less prone to undergo even slight changes by keeping. The mineral matter contained in pure gun-cotton which has not been submitted to this particular treatment amounts to about 1 per cent. The proportions found in specimens which have been silicated in Austria and in this country, according to Lenk's directions, vary between 1·5 and 2 per cent. It is difficult to understand how the addition of 1 per cent. to the mineral matter, in the form chiefly of silicate of lime and magnesia, the bases being derived from the water used in the final washing, which are deposited upon and between the fibres in a pulverulent form, can influence to any material extent either the rate of combustion or the keeping qualities of the product obtained by Lenk's system of manufacture.

Gun-cotton prepared according to the system just described is exceedingly uniform in composition. The analyses prepared both in Austria and at Waltham Abbey have furnished results corresponding accurately to those required by the formula $C_6\left\{\begin{matrix}H\\3\,NO_2\end{matrix}\right\}O_5$. In its ordinary air-dry condition it contains, very uniformly, about 2 per cent. of moisture—an amount which it absorbs rapidly from the air when it has been dried. The proportion of water existing in the purified air-dried cotton, before conversion, is generally about 6 per cent. When pure gun-cotton is exposed to a very moist atmosphere or kept in a damp locality, it will absorb as much as from 6 to 7 per cent.; but if it be then exposed to air of average dryness, it very speedily parts with all but the 2 per cent. of moisture which it contains in its normal condition. It may be preserved in a damp or wet state apparently for an indefinite period without injury; for if afterwards dried by exposure to air, it exhibits no signs of change.

The general properties of gun-cotton as an explosive agent have long been popularly known to be as follows;—When inflamed or raised to a temperature ranging between 137° and 150° C., it burns with a bright flash and large body of flame, unaccompanied by smoke, and leaves no appreciable residue. It is far more readily influenced by powerful percussion than gunpowder; the compression of any particular portion of a mass of loose gun-cotton between rigid surfaces will prevent that part from burning when heat is applied. The products of combustion of gun-cotton in air redden litmus paper powerfully; they contain a considerable proportion of nitric oxide, and act rapidly and corrosively upon iron and gun-metal. The explosion of gun-cotton when in the loose, carded condition—the form in which it was always prepared in the early days of its discovery—resembles that of the fulminates in its violence and instantaneous character. In the open air it may be inflamed when in actual contact with gunpowder without igniting the latter; in a confined space, as in a shell or in the barrel of a gun, the almost instantaneous rapidity of its explosion produces effects which are highly destructive as compared with those of gunpowder, while the projectile force exerted by it is comparatively small.

In 1864 the members of a committee appointed by Government examined a number of miners on the question of the relative advantages of gunpowder and gun-cotton when the latter was used in the form of hollow rope. The conclusion arrived at was, that gun-cotton was superior to gunpowder, especially when used in solid rocks; but that, taking into consideration the respective prices of the two materials, the extra care required with the cotton, and the injurious effects from inhaling its vapours, it was not the more useful of the two.

Experiments were, however, made by Thomas Sopwith and F. A. Abel, in 1865, with gun-cotton made from *pulp*.

The gun-cotton used in the experiments was in two forms, granulated and compressed.

The granulated gun-cotton was prepared from gun-cotton pulp, by mixing it, when dry, with 10 per cent. of its weight of gum arabic, dissolved in sufficient water to render the gun-cotton operated upon at one time just wet to the touch; after which the material was shaken for some time in a drum. By this treatment the gun-cotton assumes a granulated form: the globular grains produced vary in size between that of coarse small-arm powder and the coarsest form of blasting powder.

The compressed gun-cotton consisted of square pieces measuring from $\frac{1}{4}$ to $\frac{1}{2}$ in. across, and $\frac{1}{8}$ to $\frac{1}{2}$ in. in thickness. These were obtained by cutting up slabs of gun-cotton, prepared from pulp compressed to a density of about 50 lbs. the cubic foot.

The gun-cotton was sent to Allenheads, for the experiments, in the form of 1 oz. and $\frac{1}{2}$ oz. charges, contained in cylindrical pasteboard cases of 1 in. diameter and upwards.

The mode of charging the holes was varied somewhat with the direction in which these were bored. If they were vertical, or bored at an angle inclining downwards, the paper case containing the charge was inserted into the opening—a size being selected which fitted loosely into the latter—and the gun-cotton was allowed to fall into the hole, the case being gently shaken and squeezed to aid the exit of the charge. If the inclination of the hole was inconsiderable, it was necessary to push down the gun-cotton occasionally by means of a wooden rod, especially when the granulated form was employed. Holes which were horizontal, or had an inclination upwards, were more difficult to charge. A contrivance prepared for this purpose, but which was not sufficiently long

for the horizontal holes in these particular experiments, consisted of a slightly conical tin tube about 12 in. long, the external diameter of one end being $1\frac{1}{8}$ in., and of the other $\frac{3}{4}$ in. The narrow opening of this tube was plugged with a small piece of cotton wool, and the charge of gun-cotton was poured in at the other end. This wide end was afterwards inserted into the hole, the tube being passed into the latter as far as possible, and the charge was then pushed out of the tube by means of a wooden rod which fitted tightly into the narrow or outer end of the tin tube. This arrangement is similar in its nature to the measure used by the miners for charging the holes with powder, and, if made of sufficient length, would probably remove the difficulty which was experienced in charging the horizontal holes.

All the holes were fired with the ordinary miner's safety fuze, which was inserted before the entire charge was introduced, as is the practice in blasting with gunpowder.

After the charge was inserted into the holes and pressed down with the wooden rod, a plug of cotton waste was pushed down, for the purpose of carrying to the bottom any particles of the gun-cotton clinging to the sides of the hole. The latter was afterwards tamped, as usual, first with clay, and afterwards with débris of limestone in a nearly powdered state.

The experiments in the mines were tried in the upper part of the Great Limestone in East Cross Vein. The stone is very hard.

All the holes were nominally $1\frac{1}{8}$ in. in diameter. Some of them, in the hard limestone, tapered considerably, and would hardly have received 1-in. gun-cotton rope throughout their entire length.

Experiments at Thorn Green Quarry, Allenheads.—Eight holes were experimented upon in this quarry. The first three were vertical holes bored in ledges left by previous operations, about 2 ft. from the face of the ledge. They were numbered 1, 2, and 3, but were fired in reverse order, so that the work might be equalized, No. 3 being nearest the side face of the ledge, and No. 1 farthest from it, but about equally near to a flaw in the limestone.

No. 3 was 14 in. deep. It was charged with 6 in. of $1\frac{1}{8}$-in. gun-cotton rope (= 1·56 oz.), which left 8 in. for tamping. The proportion of gun-cotton used was that which the quarrymen had been in the habit of employing for similar holes. The face was well opened up by the explosion, and the work done pronounced highly satisfactory.

No. 2, $14\frac{1}{2}$ in. deep, which now had a side face similar to that of No. 1, was charged with 1·5 oz. of the compressed gun-cotton, which left $8\frac{1}{2}$ in. for tamping. The report of this explosion was more violent than in the case of No. 3; pieces of the stone were thrown into the air to a great height, and the rock was very much broken up all round the hole. There was decidedly more work done than by the former explosion, and fissures were produced running back in the ledge to a considerable distance. The charge of the gun-cotton used was evidently in excess of the work to be accomplished.

No. 1 hole, 14 in. deep, was charged with 1 oz. of the granulated gun-cotton, leaving 7 in. for tamping. In this instance the rock was well broken in all directions, and beyond the depth of the hole; large blocks were perfectly separated, and though not thrown off to any important extent, were readily removed by the men. The work to be performed by this explosion was perfectly accomplished, and apparently with a well-proportioned amount of powder.

No. 4 hole was vertical, 17 in. deep, and 2 ft. 4 in. from the face. It was a difficult hole, being in the midst of very solid rock. The men proposed to employ 8 in. of $1\frac{1}{8}$-in. rope for the hole (= 2·08 oz.), and they would have used 8 oz. of gunpowder. It was charged with 1·5 oz. of the granulated gun-cotton, leaving 6 in. for tamping. The work done by the explosion was pronounced by the quarrymen to be not only complete, but in excess of what they would have expected, from their usual experience: a mass of rock, 4 ft. by 2 ft. 4 in., and 14 in. thick, was blown off the front of the face; the latter was fissured in several places to a depth of about 4 ft. 6 in., and one fissure extended backwards, at right angles to the face, about 4 ft. in length.

No. 5 hole, vertical, was $18\frac{1}{2}$ in. deep, and 2 ft. 2 in. from the face. It was very similar in position to No. 4 hole, and considered to present about the same work to be accomplished. It was charged with 1 oz. of the compressed gun-cotton, which left 14 in. for tamping. The work done was very similar, and pronounced fully equal to that performed by the 1·5 oz. of granulated gun-cotton in the preceding experiment.

No. 6 hole, vertical, 14 in. deep and 2 ft. from the face, appeared somewhat weaker than the two preceding ones, as the face of the rock exhibited two flaws, one on either side of the hole, about 1 ft. and 18 in. to the right and left. It was charged with $\frac{1}{2}$ oz. of compressed gun-cotton; the tamping amounted to 12 in. Two wide fissures were produced in the face, by the explosion, to a depth of about 5 ft., and some fissures (one about 4 ft. long) were produced towards the back of the ledge. The masses of rock detached by this operation, which admitted of removal by the workmen, appeared nearly equal in quantity to the work done in the two preceding operations. The quarrymen were greatly astonished at the work done with the $\frac{1}{2}$ oz. of material, in a position where they would have employed at least 6 oz. of gunpowder.

No. 7. This was a horizontal hole, 30 in. deep, in the face of a ledge of the limestone. The distance of the hole from the upper surface or ledge was 3 ft. The total width of solid rock to the right and left of the hole was 5 ft., there being a vertical fissure on the one side about 2 ft. 5 in. from the hole. There was also a horizontal flaw, near the base, in the block of rock to be operated upon. The hole was considered a very strong one by the men. They proposed to employ 10 oz. of powder, or 12 in. of $1\frac{1}{8}$-in. gun-cotton rope (= 3·12 oz.). The hole was charged with 1 oz. of granulated gun-cotton, leaving 23 in. for tamping. By the explosion a large block of the rock, constituting the principal mass of the ledge, situated above the hole, was detached and moved forward some distance, so that it was easily thrown off by the workmen; in addition, a smaller block, considerably to the left of the hole, was detached, and the rock was broken up beneath the hole, so that a considerable quantity could be easily removed. The amount of stone detached by this operation, with 1 oz. of the granulated gun-cotton, was about 53 cub. ft.

No. 8. This was a hole, 26 in. deep, driven at a slight angle into a face of the rock which had not yet been operated upon. The height of the face above the hole was about 6 ft., and the undisturbed surface soil was above it. It was charged, in the first instance, with 1 oz. of compressed gun-cotton, the tamping occupying 23½ in. of the hole. The explosion blew only about 2 in. off the mouth of the hole, but produced vertical fissures, extending to some distance above and below the hole. This hole was afterwards re-charged with 2 oz. of compressed gun-cotton, the explosion of which considerably increased the fissures, but the mass of rock was so closed in upon all sides, excepting the face, that a more considerable charge than 2 oz. would evidently have been required in the first instance (when the rock was quite sound) to effect any important dislodgment. After the second charge, the hole was too unsound for further experiments.

Experiments in the Mines at Allenheads.—There is some difficulty in forming an accurate estimate of the comparative work done, by different charges of gun-cotton or gunpowder, in the confined space of a drift, or other similar locality; and the débris of previous blasting operations sometimes render it scarcely possible to estimate correctly the work accomplished.

The following is a brief statement of the most definite observations made;—

Ten holes had been previously prepared and were operated upon. In three cases of what was pronounced to be difficult work, the holes had been driven either in a horizontal or slightly sloping direction into the perfectly sound rock, in positions where no weakness had been induced by previous blasts. The work accomplished by the compressed gun-cotton was pronounced excellent; the rock being removed up to the extremity of the holes. In one of these experiments, in a hole 13 in. deep, 1½ oz. of compressed gun-cotton were used, leaving 7 in. for the tamping. In another hole, 11 in. in depth, ½ oz. of compressed gun-cotton, with 8 in. of tamping, performed the work allotted to it perfectly. In a third hole, 16 in. deep, at the base of the rock, quite apart from previous blasting operations, 2 oz. of the compressed gun-cotton were used, leaving 12 in. for tamping. The rock was cleanly detached to the base of the hole. The miners stated that the usual charge of gunpowder for a hole of this kind (about 8 oz.) would not have been likely to do any useful work, the position of the hole being a very difficult one.

Another hole of the same depth as the last, and similarly situated, was charged with only 1 oz. of the compressed material. In this instance a length of 10 in. of the hole was blown away with the surrounding rock, leaving 6 in. undestroyed.

A hole, 15 in. deep, driven almost horizontally into the rock, was also charged with 1 oz. of compressed gun-cotton. In this instance, again, a portion of the hole was not blown away, but this result may have been, to some extent, due to an unsoundness of the hole at the base, which was discovered after the explosion.

Four holes were operated upon, which were known to be unsound (that is, to pass into cavities or fissures of more or less considerable size). Two of these, each 12 in. deep, which were pronounced very unsound, were charged with 1 oz. of the granulated gun-cotton. In both instances, the gases resulting from the ignition of the gun-cotton escaped through the fissures in the rear, and there was no destruction. (The same kind of failure took place on several occasions, with the employment of both gun-cotton rope and gunpowder, when the committee operated upon unsound holes at this place in October, 1864.)

A third hole, 14 in. deep, and unsound at the base, was charged with 1½ oz. of compressed gun-cotton, and 9 in. of tamping. On this occasion, the work done was pronounced good, the rock being blown away to within 4 in. of the bottom of the hole.

The fourth hole, 12 in. deep, in which the unsoundness was less obvious than in the preceding three, was charged with 1 oz. of granulated gun-cotton, leaving 7 in. of the hole for tamping. The work allotted to this hole was perfectly accomplished, the rock being cleared to the base of the hole.

These trials of gun-cotton charges prepared from the pulp, though insufficient to furnish conclusive results as regards the merits of the explosion, when employed in a granulated form, nevertheless afford sufficient experimental evidence to warrant the following statements;—

1. The *granulated* gun-cotton pulp (not compressed) appears decidedly more effective as a blasting material than an equal weight of gun-cotton in the form of rope. This result is to be ascribed mainly to the greater rapidity of explosion of the gun-cotton when in the form of light granules; it may also, in some measure, be due to the circumstance that, in a hole charged with gun-cotton in the form of grains, or small fragments, the charge is in close contact on all sides with the rock, which is not the case when gun-cotton rope is employed, unless the hole is perfectly cylindrical, which it very seldom is. This remark as to the irregular shape of the holes does not apply to those made by the boring apparatus of Percy Westmacott, which has been partially in use at Allenheads Mines, and by which a perfectly cylindrical hole is effected. The operation of this machine was witnessed by the committee in 1864, but it has not yet been brought into continuous use.

This form of the material occupies a little more space in a hole than an equivalent weight of gun-cotton rope; this circumstance may perhaps somewhat lessen the full destructive power of the granulated gun-cotton; but a careful comparison of results is yet needed before a definite opinion can be expressed on this point.

2. The *compressed* gun-cotton, in the form of small lozenge-shaped fragments, exhibited a superiority in destructive power over the granulated gun-cotton, which may be ascribed to the fact of its occupying less space, and therefore affording room in a hole for a proportionately large amount of tamping, and also bringing the destructive agent well in rear of the work to be performed. The superiority of the gun-cotton in this form over charges of gun-cotton rope, as regards the comparative amount of work done by equal weights of the two, appears unquestionable.

3. No decided evidence was obtained of a superiority of the granulated and the compressed gun-cotton over gun-cotton rope, when employed in *unsound* holes.

4. The charging of holes, the position of which was horizontal, or nearly so, with gun-cotton in

the form of granules or small fragments, presented difficulties, to overcome which, special mechanical appliances would have to be used if the gun-cotton be introduced into the hole without an envelope. There is also considerable risk, under these circumstances, of small fragments of the gun-cotton becoming lodged on the sides of the hole, unless their removal can be ensured by carefully cleaning the holes with plugs of cotton waste, hemp, or soft paper, before the tamping is proceeded with. The charges might, however, be inserted into holes in thin paper cases, which would obviate the difficulties and possible risk attending the charging of the holes, though it would probably do away, to some extent, with the advantage resulting from the tendency of the granulated gun-cotton, when employed without a case, to accommodate itself to any irregularity in the shape of the hole.

It has been found that the explosive force of gun-cotton may, like that of nitro-glycerine, be developed by the exposure of the substance to the sudden concussion produced by a detonation; and that if exploded by that agency, the suddenness and consequent violence of its action greatly exceed that of its explosion by means of a highly-heated body or flame. This is a most important discovery, and one which invests gun-cotton with totally new and valuable characteristics; for it follows, as recent experiments have fully demonstrated, that gun-cotton, even when freely exposed to air, may be made to explode with destructive violence, apparently not inferior to that of nitro-glycerine, simply by employing for its explosion a fuze to which is attached a small detonating charge.

The mode of operation is as follows:—

The detonating substance is placed in a tin tube of the dimensions shown, Fig. 3414, and it occupies in the inside of the tube the space from A to B.

On this at C is placed a small plug of gun-cotton, and the rest of the tin tube from C to the open end at D is empty.

3414.

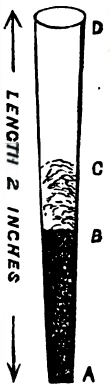

Before leaving the manufactory a small piece of paper is pasted on the end merely to prevent anything falling into it, and this paper, so long as it remains, serves to distinguish the charged or useful primers, as the tin tubes are called, from empty tubes.

It is in this form that the detonating primers are supplied from the manufactory.

These primers are, in fact, large percussion caps, and are to be handled with care, as also to be protected from fire, and from all violent concussion. They explode with some violence when ignited, or if struck a violent blow, but with reasonable care are quite harmless, as much so as ordinary percussion caps for fowling-pieces. They may not only be safely handled, but may be thrown about with any freedom short of actual and intentional violence. Even when thrown on the ground or allowed to fall from a height of 20 or 30 ft., they are in no way affected by such usage.

When the primer is to be used, the paper cover at D is removed, and an ordinary fuze is then inserted, so as to be in contact with the gun-cotton at C. The tube is made large enough to receive an ordinary fuze, and as soon as the insertion has been made, the tube is pressed close to the fuze by a pair of common pliers.

This preparation is most conveniently done before entering a mine, but there is nothing to prevent its being done in a mine or quarry at any time.

The charges of compressed gun-cotton are made with a circular hole to receive the fuze. Into this hole the small end of the tin primer is inserted, instead of the fuze, and this is the only difference in the mode of firing as compared with the usual mode of exploding gun-cotton with a fuze.

It is important to observe that when the primer is thus used for blasting, it is not necessary to fill up the hole by any stemming or tamping; the hole may be left perfectly open, and those who know how often accidents occur in the process of stemming or tamping will at once appreciate the saving of time and the amount of personal safety thus obtained.

In the case of failure of explosion, accidents often occur from the miners attempting to remove the stemming material. All this is avoided, as after a proper interval of time the fuze with the primer attached can be safely and easily withdrawn from the open bore-hole.

Some remarkable results have been already obtained with this new mode of exploding gun-cotton. Large blocks of granite and other very hard rock, and iron plates of some thickness, have been shattered by exploding small charges of gun-cotton, which simply rested upon their upper surfaces—an effect which will be sufficiently surprising to those who have hitherto believed, as everyone has believed, that unconfined gun-cotton was scarcely to be considered as explosive at all, that it puffed harmlessly away into the air, not exerting sufficient force upon the body on which it might be resting to depress a nicely-balanced pair of scales, supposing the charge to be fired upon one plate of the scale. Further, long charges or trains of gun-cotton, simply placed upon the ground against stockades of great strength, and wholly unconfined, have been exploded by means of detonating fuzes placed in the centre or at one end of the train, and produced uniformly destructive effects throughout their entire length, the results corresponding to those produced by eight or ten times the amount of gunpowder when applied under the most favourable conditions. Mining and quarrying operations with gun-cotton applied in the new manner have furnished results quite equal to those obtained with nitro-glycerine, and have proved conclusively that if gun-cotton is exploded by detonation it is unnecessary to confine the charge in the blast-hole by the process of hard-tamping, as the explosion of the entire charge takes place too suddenly for its effects to be appreciably diminished by the line of escape presented by the blast-hole, some loose sand or broken rubbish to hold the fuze in position being all that is required. Thus the most dangerous of all operations connected with mining may be dispensed with when gun-cotton fired by the new system is employed.

Abel and Sopwith, in their report upon the use of gun-cotton with the detonating primer, give the following as an illustration of the different results obtained by the use of the primer as compared

with the explosion of gun-cotton by an ordinary fuze;—A disc of gun-cotton, weighing 1 oz., was laid upon a large slab of sandstone, fired by means of the ordinary fuze; it merely ignited with a sudden burst of flame, without much noise, entirely without violence, and quietly burnt away in about thirty seconds, doing no injury whatever to surrounding substances; but when the same quantity of gun-cotton of the same quality was laid on the same stone, and fired by means of a detonating primer, the whole mass instantaneously exploded with a report as loud as a cannon, and with an amount of destructive energy which could with difficulty be understood by any who had not quietly seen and carefully examined the result; not only was the stone shattered and broken into many pieces, but those portions of it which were immediately under the charge were literally ground and crushed into sand.

It will readily be observed that this discovery, which we believe is due to Mr. Brown, of the War Office Chemical Establishment, is likely to be attended with the most important results. Not merely is the strength of gun-cotton exploded in this way much greater than that of the same substance fired by simple ignition, but it now operates under conditions which were sufficient under the old system practically to deprive gun-cotton of its power.

See BORING AND BLASTING. QUARRYING.

GUN MACHINERY, RIFLED. FR., *Machine à rayer les canons de fusil, ou les bouches à feu;* GER., *Ziehbank für Geschütze;* ITAL., *Macchina da rigare;* SPAN., *Máquina de estriar les cañones.*

John Anderson, writing in P. I. M. E., 1862, observes that in the manufacture of guns, more especially of rifled cannon, one great object is to have the bore of definite dimensions, perfectly straight and parallel. The difficulty of accomplishing this depends entirely on what is considered straightness or parallelism, and on the closeness of measurement which may be adopted. With reference to dimensions: if the bore were completed in its boring up to the exact size previous to rifling, it would, from the rubbing of the rifling block and the rusting and cleaning after proof, be considerably over the size when actually finished. Hence it is found necessary to bore only up to within $\frac{2}{1000}$ of an inch of the proper dimensions, and two plug-gauges are employed for the purpose, one $\frac{2}{1000}$ of an inch under the proper size and the other exactly the proper size; the first is 12 in. long and must pass through the bore like the plug in the Whitworth gauge, while the other should not enter. In working so near there is much liability of exceeding the dimensions; hence the entrance for the final boring tool is made from the muzzle end, where an enlargement is of the least consequence. In the preparation of instruments for such precise boring it is found in practice that adjustable cutters are the most economical and convenient, with packings of the finest paper, which may now be obtained less than one thousandth of an inch in thickness. But in every instance these tools wear to some extent before reaching the other end, even if there is nothing left for the last cutter in the series to cut away. The farther end of the bore is therefore smaller than the other to an extent which is never less than one thousandth of an inch; but this difference is not considered sufficient to warrant the risk that would be incurred in proceeding from the other end a second time with a newly-adjusted instrument still untried. In dealing with muzzle-loading guns the difficulty is much increased in comparison with breech-loading, as the latter afford great facility of arrangement; and it is to breech-loading guns that the present paper chiefly refers.

In order to prepare for the last boring but one, the original bore of the innermost tube becomes the basis to work from, on the same plan as already described with reference to the previous preparation of this tube for building up the gun. It has lost its truth to some extent by the shrinking on of the exterior tubes, but that is recovered by future steps. A true bearing is then turned upon the exterior of the gun at both ends, and it is placed in bearings on a long saddle in a vertical machine. A boring bar with several sets of cutters is used, which works in bearings at both ends of the gun, and has upon it a block that follows the last set of cutting instruments. The bar revolves in fixed bearings, the gun having a slow motion upwards. There is usually about $\frac{2}{10}$ of an inch in the diameter to be cut out by this preliminary operation, and the aim is to continue the bore up to the required size, namely, $\frac{2}{1000}$ of an inch below the finished dimension, but this is seldom done; care is taken, however, that the bore is not above the size. It might be supposed that the turned bar and bored bearings would give a round hole, but this is not the case unless they are perfectly round themselves; hence these portions of the machine are looked upon as a foundation of truth, and are prepared as carefully as if intended for gauges. The boring bars, although made of steel like the gauges, are constantly wearing, and require vigilant attention to keep them up to truth. The hole from this boring is generally nearly straight, but never parallel; hence it is difficult to examine it with gauges, although no other mode of measurement is of any value in giving precise information on so delicate a point.

The next and last boring is done with the intention of making the hole parallel, but with no effort at straightness except what is derived from the bore itself as already made. The tool employed is a long broaching bar, shown in Fig. 3421, with six cutters A A arranged in two sets of three each, as shown enlarged in Figs. 3422, 3423. The first three cutters have all the work to do, the second set on entering being adjusted to the same diameter and intended only to scrape any of the surface that may be left from the first, which is not much, as there is seldom more than one thousandth of an inch altogether to be cut away. Both sets of cutters cut on the side rather than the front. The value of three cutters for steady cutting is well known; but it is also found that such an instrument is very apt to make a bad polygonal bore unless it copies a true circular form from something else. This true circular form, in addition to straightness of bore, is taken from the bore itself as already made. The transfer is effected by means of the bearing surfaces B B on the broaching block, Fig. 3422, which are long spiral surfaces made of gun-metal and filling the bore. In the earlier instruments it was found that straight bearing surfaces on the broaching block were liable to allow the roundness of the bore to wander into a polygonal shape; but by twisting the bearing surfaces into a spiral form round the block, as shown at B B in Fig. 3422, this liability has been prevented. An ordinary horizontal lathe is the most convenient for this operation, but it

is found difficult to keep the bore sufficiently clear from the cuttings; hence the lathes are placed at a considerable inclination, to allow a stream of soapy water to flow through.

The bore is now within one thousandth of an inch of being parallel, but is never positively correct, though considered sufficiently so in the present stage of the manufacture All the tool adjustments for these precise dimensions are performed with great strictness by a special department; still, with all the care that can be employed it is found extremely difficult to obtain at once the required conditions of correct size and roundness, with a straight and parallel bore. The gun thus bored, when examined and passed by the measuring department, is ready for the operation of rifling. Without this special department for measuring, the quality of the gun would speedily degenerate and tell unfavourably on the smooth cutting of the grooves in the rifling, since the rifling block is entirely dependent on the bore for its parallelism and steadiness.

The foregoing mode of boring applies to guns that are open at the breech; but in the case of muzzle-loading guns that are closed at the breech the approximation to a perfect bore is obtained by boring entirely from the muzzle and employing extreme care in opening with a slide-rest; and then by having nicely-fitted bearings behind the cutters so as to transfer the truth of the muzzle onwards, which is accomplished to a certain extent successfully, but not so perfectly as by the former arrangements. Much more skill in the workman is required to produce a perfect bore; indeed it is rare to find a bore which may be pronounced nearly perfect in the strict sense of the word; and any want of that high condition tells severely on the future operation of rifling, when the fitting of the rifling block in the bore is dependent on the parallelism of the bore for its steadiness and smoothness of cutting.

The manner of cutting the interior grooves for rifling the gun is independent of the different descriptions of rifling; and in any plan of rifling, with proper arrangements for transfer from copies, the most recondite descriptions of grooves can be formed inside the gun as easily as straight lines on the exterior.

In 1845, some guns being suddenly required to be rifled, an ordinary planing machine was extemporized for the purpose, and the required spiral was cut on the rifling bar, as shown in Figs. 3424, 3425, which was left free to revolve in a bearing. The nut for the rifling bar to work through was attached to the muzzle of the gun, and the machine being set in motion, its reciprocating action effected the cutting of the spiral rifle groove, and an ordinary dividing plate gave the

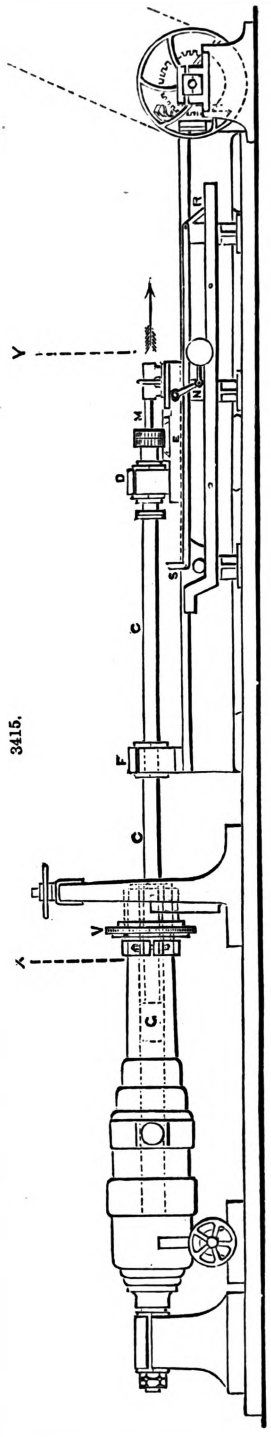

3415.

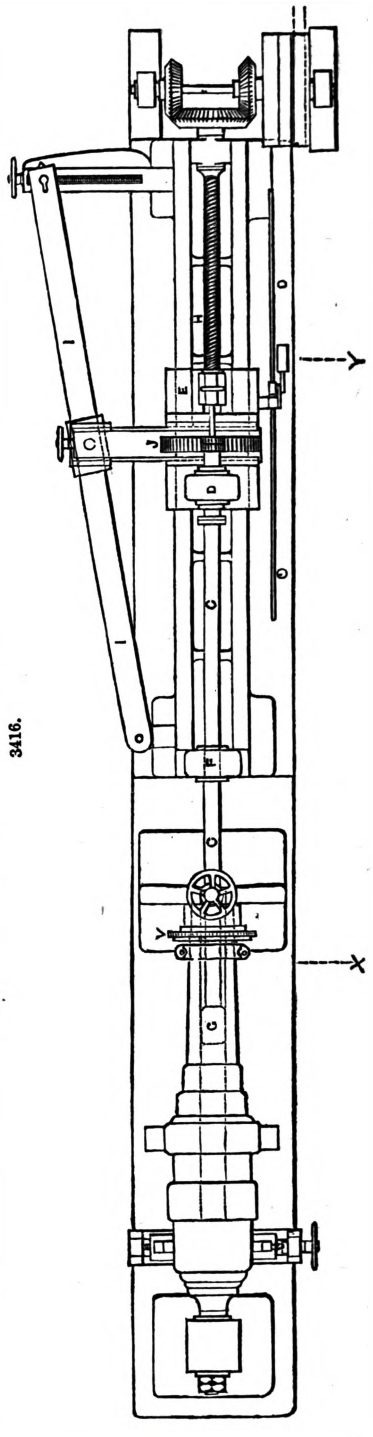

3416.

requisite number of grooves. Such a combination possessed all the elements for rifling guns with a simple spiral that was parallel at the sides and on the bottom; but in practice guns have to be rifled with a continually varying twist, with a varying width of groove, with sudden turns, with the shape of one side of the groove continually altering in form, and with many other peculiarities; and hence such simple arrangements will not suffice for their production, and other combinations have to be resorted to.

3417.

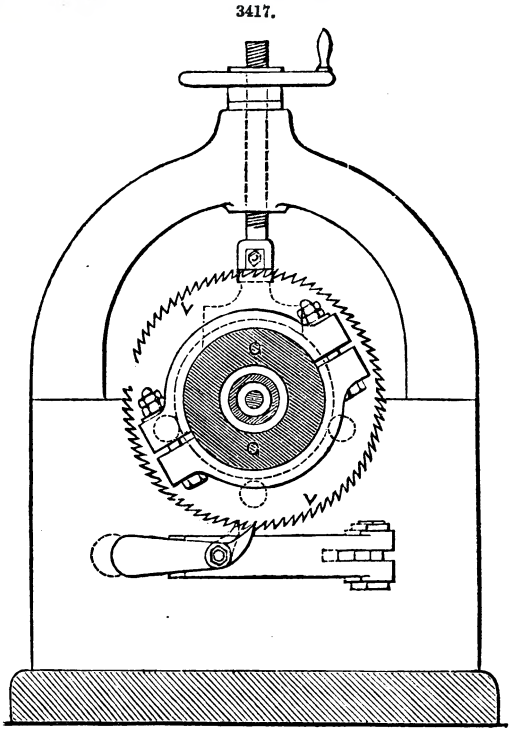

During the last few years an extraordinary amount of attention has been directed to the subject of rifled guns, and as most of the inventions have been carried out in the Royal Gun Factory (under the superintendence of John Anderson), it has been necessary to provide for executing any description of grooving without having recourse to an elaborate copy for each in the immediate instrument, which is expensive, and usually involves the loss of considerable time in getting the gun ready for trial. At the same time it may be stated that the simple square bar cut in a spiral or twisted form, as shown in Figs. 3424, 3425, when it can be employed, is the most perfect rifling instrument, because there can be no error in using it, which is not the case when the twist of the grooves is dependent on the adjustment of a machine that is ready to perform any description of grooving. In the construction of permanent rifling bars it is now found that a round bar with a spiral groove cut in it answers the purpose almost as well as the square bar cut into a spiral or twisted form, as shown in Figs. 3424, 3425, the spiral groove in the round bar and also the spiral twist in the square bar being both cut in an ordinary screw-cutting lathe. Such bars, however, cannot readily be applied where the spiral is

3418.

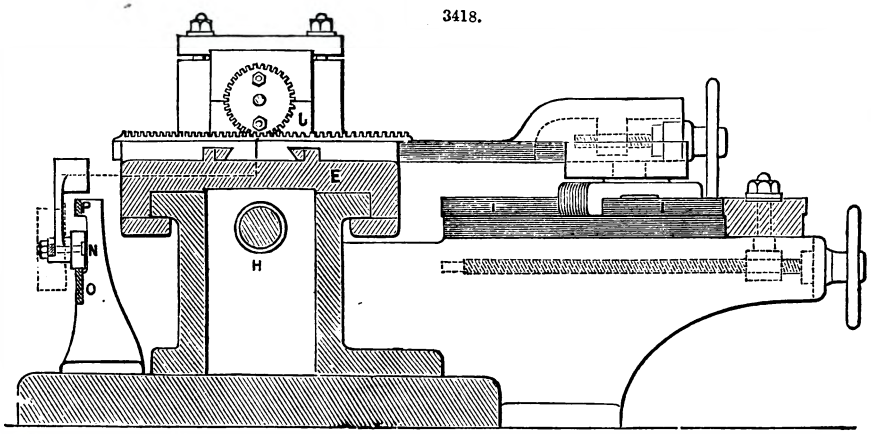

of increasing pitch, where there are sudden curves, where the grooves shunt, or indeed for any groove which is not a true portion of a screw.

In a rifling machine, Figs. 3415, 3416, intended for irregular grooving it is necessary that there should be facilities for cutting any form of twisted groove, first as regards the sides of the spiral, and secondly, as regards the bottom of the groove; and the two requirements must be so combined that all the cutting may be done at the same time.

Such a machine is shown in Figs. 3415 to 3420, which represent the rifling machine employed in the Woolwich Gun Factory. Fig. 3415 is a general side elevation of the machine, and Fig. 3416 a general plan. Figs. 3417, 3418, are transverse sections to a larger scale, and Fig. 3419 an enlarged side elevation of the traversing saddle which carries the rifling bar. Fig. 3420 is a combined diagram illustrating the principal motions, the tangent bar I which gives the twisting motion to the rifling bar being here represented in the vertical plane, in order that it may be seen in combination with the copy bar O, which gives the feed motion to the cutter in the rifling head: the lengths are also shortened in some of the dimensions for convenience of illustration, but the side elevation and plan, Figs. 3415, 3416, show the correct dimensions and relative positions of the various portions of the machine.

The rifling bar C, Figs. 3415 and 3420, is round and parallel, one end being held firmly in a bearing D on the traversing saddle E, with a number of collars to take the pull of the cutter;

while the other end is free to turn and slide in a stationary bearing F near the muzzle of the gun G. The longitudinal motion of the rifling bar may be given by any of the planing-machine motions; that by the screw H, Fig. 3416, is preferred on account of the smooth action which it

3419.

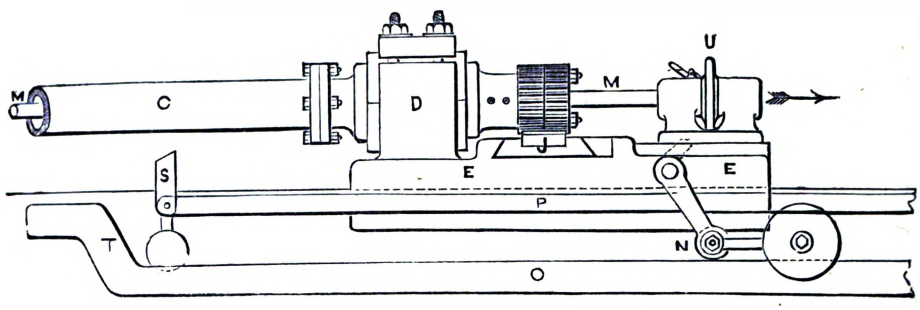

3420.

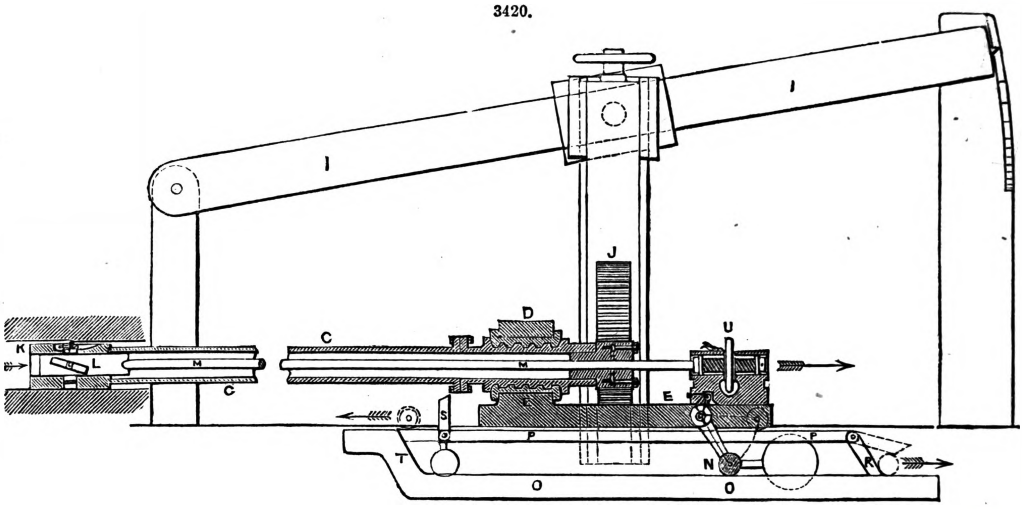

3421.

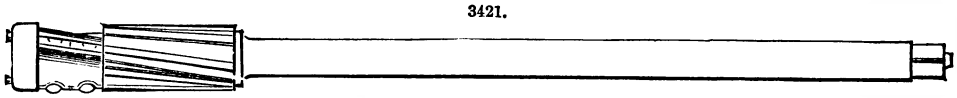

3422.

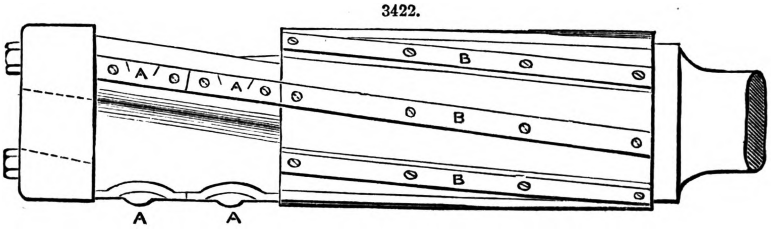

3423.

3424.

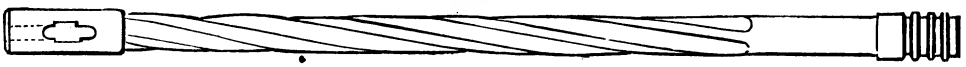

affords. The twisting motion of the rifling bar is derived from the tangent bar I by means of the rack J sliding transversely on the traversing saddle E, and gearing into a pinion on the end of the rifling bar C, Figs, 3418, 3419. The tangent bar I can be set at any angle by means of the adjusting screw and graduated arc, or can be made of any shape within the limits that the machine is capable of following the quirks of the rifling. Hence to produce any description of twisting in the grooves of the gun it is only necessary to employ a tangent bar of suitable pattern for the purpose, which will be faithfully copied on the interior of the bore by means of the rack J tracing the pattern. In guns where there are several twists or alterations of form in a single groove it is sometimes necessary to have several differently-shaped tangent bars piled one on the top of the

3425.

other, each of which is used in turn by adjusting the tracing rack J to the bar to be copied; and in this way any form, however recondite, can be accomplished as easily as a regular spiral.

In the greater number of rifled guns the depth of the grooves is uniform, but in others it is a varying surface at different positions of the bore; hence it is necessary to have the cutting instrument arranged so as to vary in depth as it proceeds along the gun. It is also of importance that the cutter should not rub on the gun as it returns, since the rubbing affects the maintenance of a fine cutting edge on the tool, and smoothness of cutting is an essential condition. It is therefore necessary that the cutting tool shall be in a slide-rest or holder in the head of the rifling bar, and capable of being drawn out or in transversely as required. For this purpose the rifling bar C is made hollow, and the tool holder in the rifling head K, Fig. 3420, is actuated by an inclined slot L in the internal feed-rod M, as shown in the enlarged sections of the rifling head, Figs. 3426, 3427. By working the feed-rod M longitudinally out or in, a radial motion is given to the cutting tool in either direction. The feed-rod M projects from the other end of the hollow rifling bar C, and its longitudinal movement is governed by the roller N which traces the copy bar O, Fig. 3420; the form of the copy bar O is thus transferred by the lever to the feed-rod M, and hence any indentations on the bar O are given to the bottom of the groove in the gun. To prevent the cutting edge of the tool from rubbing in its return, an upper rail P is provided, having a trap R and S to open and close at each end in order to allow the tracing roller N to pass. The drawings represent the machine in the forward traverse, in the act of cutting a groove in the gun, the arrows showing the direction of the motion. During this time the roller N is tracing the copy bar O; but on arriving at the end of the bar the roller lifts open the trap R, as shown dotted in Fig. 3420; and when it has passed the trap, the latter immediately falls and forms an incline for the roller to run up in its return course backwards and ride upon the upper rail P, thus pushing the feed-rod M inwards in the rifling bar C, and thereby withdrawing the cutting tool, which remains withdrawn during the whole of the return traverse of the machine. When the roller N reaches the other end, it finds the trap S open by means of the balance weight; but the roller folds the trap downwards, as shown dotted in Fig 3420, thus forming a bridge to enable it to pass over. The trap is then opened again by the balance weight, and on starting again in the forward motion the roller drops down the incline T at the commencement of the copy bar O, thus drawing out the feed-rod M and thereby advancing the cutter into its working position. The incline T gives the form to the entrance of the groove in the gun, and is generally of very definite shape. It will thus be seen that any description of feed-motion can be given to the cutting tool; and hence by means of the tangent bar I and the copy bar O any kind of rifling can be accomplished without difficulty. To illustrate the capability of the machinery, a specimen rifled tube has been made (shown in the International Exhibition) with grooves cut in four different ways, one of which is spiral and wavy, undulating on the bottom, and having the width of the groove formed with a progressive irregularity.

3426.

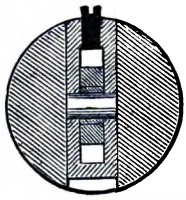

3427.

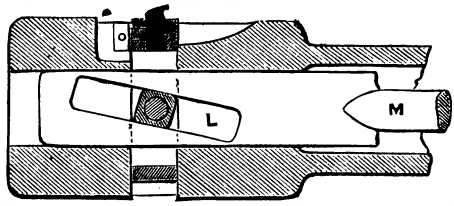

For the purpose of advancing the cutter and each traverse so as to obtain the additional depth required in the next cut, the outer end of the feed-rod M has a screw and hand-wheel U upon it, Fig. 3420, by which the cutter is set up to cut deeper in each successive traverse, until the groove is finished to the required depth. The hand-wheel also affords the means of taking up the wear of the cutter, so that all the grooves are finished to exactly the same depth. When one groove is completed, the gun is turned forwards through the required arc by means of the ratchet-wheel V upon the muzzle, Fig. 3417, which serves as a dividing plate, being made with the same number of teeth as there are to be grooves in the bore of the gun.

Experiments have recently been made with another kind of cutting instrument, by which the whole of the grooves are made at one time by means of a circular rifling head carrying as many cutters as there are grooves to be made. A series of these rifling heads are used in succession, following one behind another on the same bar, each one cutting the groove a little deeper than the preceding one, and by pulling through ten or twelve of them the grooving is effected. This kind of instrument is applicable only to breech-loaders, but so far as economy is concerned it is the most expeditious of all methods. In some of the rifling tools made on the former plan of withdrawing the cutters in returning, eight cutters have been used; but it is doubtful whether they are more economical than a smaller number, as time is lost in obtaining perfect adjustment with so many cutters working to one thousandth of an inch. Where no variation is required in the depth of the grooves, a rifling head with fixed cutters can be used, as shown in Figs. 3428, 3429. The cutters are here fixed in a block rocking upon a centre pin in the rifling head, to allow them to

3428.

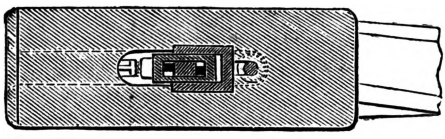

3429.

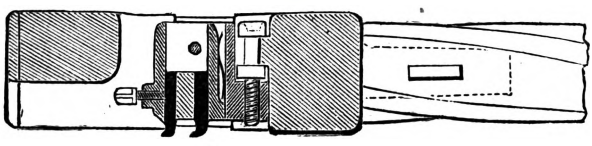

clear in the return traverse, as in a planing machine; they are set up after each traverse by an adjusting screw in the rifling head, advancing the block in which the cutters are fixed. This rifling head is for cutting the grooves in muzzle-loading guns, the cutters being set to cut inwards

from the muzzle towards the breech as the rifling head is pushed down the gun, instead of in the contrary direction as in the rifling head previously described and shown in Figs. 3426, 3427.

The copying principle is also used in drilling the various holes for the sights and other parts upon the outside of the guns. In a gun which is intended to hit a target at 2000 or 3000 yds. distance, the value of the thickness of a line in half the length of the gun is important; and as all the Armstrong guns are made so that the several parts interchange, absolute precision in the positions of the several holes is essential. Most of the holes have to be drilled on the side of the gun, where the difficulty of entering correctly is greatly increased on account of the surface being oblique to the direction of the holes; so that the drill requires to be guided very steadily, and the ordinary plan of dividing off the holes and the use of a centre punch are altogether inadmissible. A cast-iron saddle is therefore made to fit upon the gun and also upon the trunnions, being cast in halves, so that the whole of that part of the gun in which the holes have to be made is enveloped in it. The saddle is correctly made with copy holes lined with steel, the several holes being of the required dimensions of the holes to be made in the gun. Cylindrical drills are employed, which, fitting the holes in the copy, give the utmost accuracy to the sight-holes without any effort.

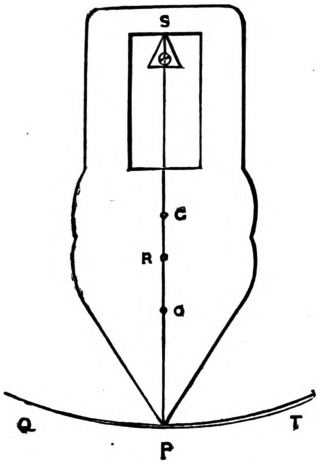

3431.

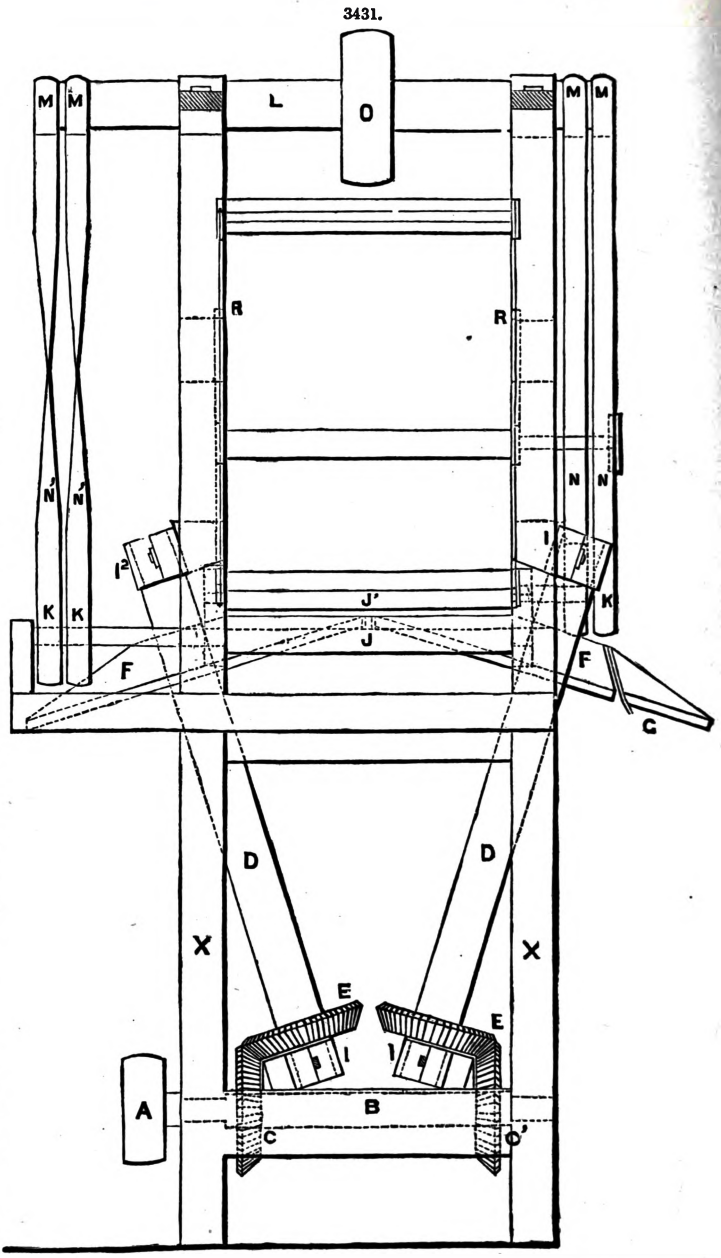

GYRATION. Fr., *Mouvement giratoire;* Ger., *Kreisförmige Bewegung;* Ital., *Girazione;* Span., *Rotacion.*

The centre of gyration is that point in which, if all the matter contained in a revolving system were collected, the same *angular velocity* will be generated in the same time by a given force acting at any place as would be generated by the same force acting similarly in the body or system itself.

The distance of the centre of gyration from the point of suspension, or axis of motion, is a mean proportional between the distances of the centres of oscillation and gravity, from the same point or axis. If S, Fig. 3430, be the point of suspension of any regular or irregular body P S; G the place of the *centre of gravity;* O that of the centre of oscillation; and R that of the centre of gyration; then $RS = \sqrt{SO \times SG}$; hence, $SO \times SG$ = a constant quantity for the same body and the same plane of vibration S Q T. If $SG = 25$, and $SO = 36$ units of length, then $SR = \sqrt{25 \times 36} = 30$.

Ira Gay's Conical-Plate Planing Machine.—In this machine the centre of the cutting edge coincides with the centre of gyration of the revolving cutter-holder. Ira Gay was an experienced

mechanical engineer; he was born in Dunstable, in the county of Hillsborough, New Hampshire, U.S. His machine, Figs. 3431 to 3435, for planing boards, plank, and other articles, is not of a complicated nature. Fig. 3431 is a front view of the machine; Fig. 3432, a side view; Fig. 3433, the plane-stock; Fig. 3434, a section through the centre of the plane-stock; and

3432.

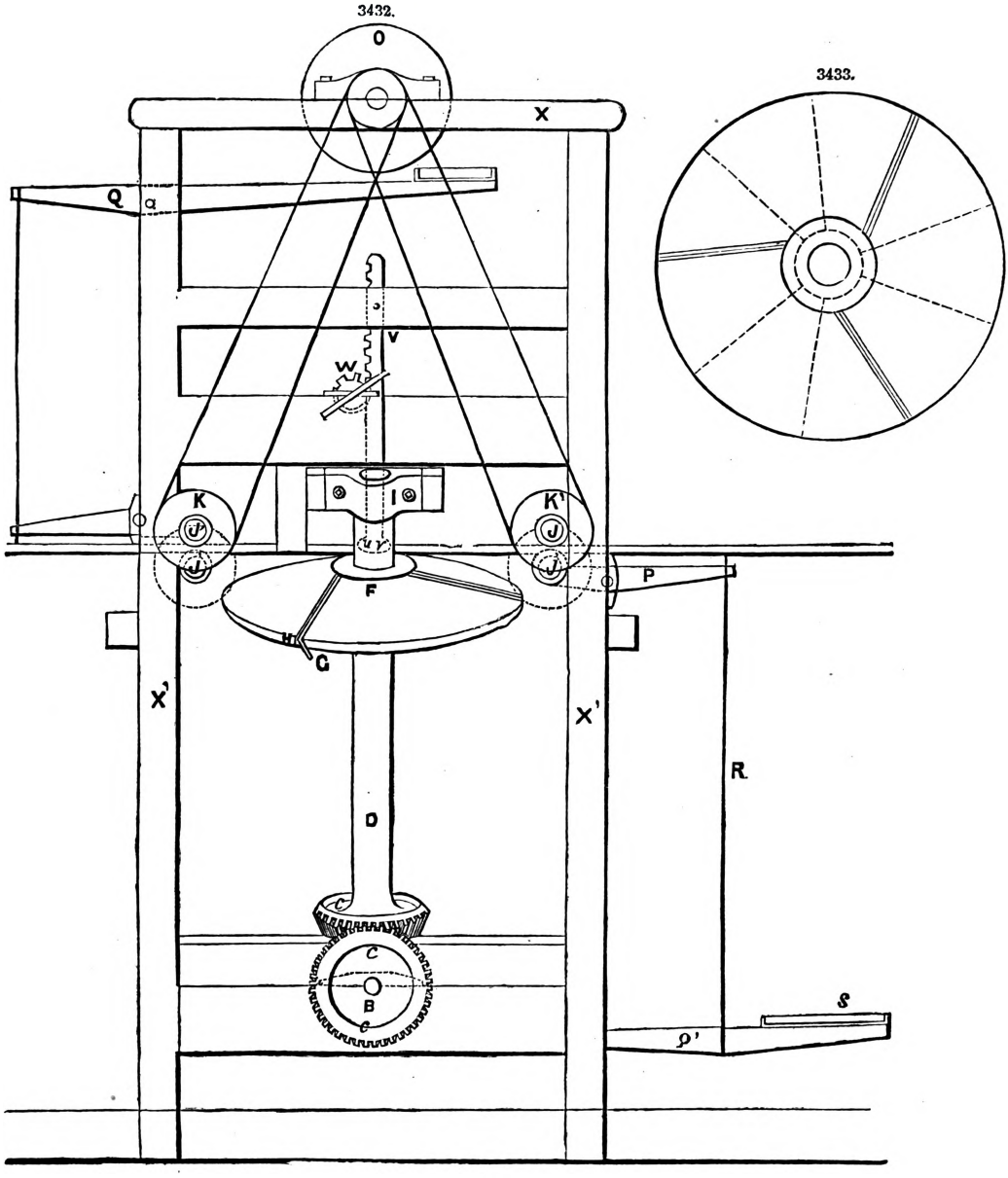

3433.

3434.

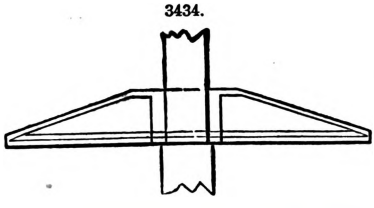

3435.

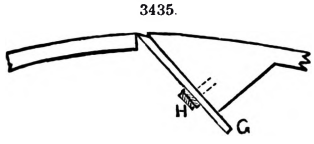

Fig. 3435, a section of the plane-stock cut across so as to show the plane-iron and the manner of fixing it to the stock. A is the main pulley to which the power for driving the planes is applied by means of a belt. B, the main shaft on which the driving wheels C C are fastened. D D, upright shafts inclining a little from a perpendicular position. E E, wheels attached to the upright shaft D, and driven by the wheels C C. F F the plane-stocks attached to the shaft D D.

The face of the plane-stock may be levelled to suit the views of the operator, but must be levelled enough to throw off the shavings freely; more than this tends to render the surface planed uneven. An angle of about 5 degrees from a right angle to the shaft is a very good inclination. The plane-iron is shown at G, Fig. 3435, which also shows the manner of fastening it to the stock by means of the screw H. J J are the receiving and delivering rolls driven by the pulley K. T T, boxes for the upright shafts to revolve in. At the top of the machine is the shaft L for the purpose of driving the receiving and delivering rolls, upon the ends of which are pulleys M M, corresponding with those on the rolls over which pass the belts N N. O, the pulley for communicating motion to the shaft L. P P are levers attached to the rolls and made to pass them together while the boards are passing through the rolls; these levers are assisted by other levers Q Q, connected by the rod R R, and weighted as seen at S S. T is a board passing through the machine and confined down to the plane by means of two small rolls U V, which are adjusted to their proper place by means of the rack V and pinion W. X is the frame of the machine. The mode of using the machine is simply to insert the end of the board between the receiving rolls, after which the board is carried through the machine by means of the rollers, and planed in its passage.

Centre of Spontaneous Rotation.—No matter what the nature of an impulsive force may be, or how that force is applied to a body at liberty to move in any direction, the whole force, when not applied to the centre of gravity, is employed to turn the body, and at the same time the whole force is employed to move the centre of gravity in the direction of such force. To illustrate this important proposition, let A B, Fig. 3436, be a body placed anyhow, at liberty to move in any way. The force P, or two forces, each equal to ½ P, is exerted at the point A; P has the power to turn that body, and to drive on the centre of gravity. We have then to consider the centre of oscillation, the centre of percussion, the *centre of spontaneous rotation;* we have nothing to do with the centre of gravity once the force acts upon a body and attempts to move it. If we apply two new opposing forces each equal to ½ P at the same distance as P from the centre of gravity G, they would balance each other, and would not interfere with either the progressive or the turning motion. But we shall now consider another arrangement of these forces; two ½ P's will drive on the centre of gravity; the other two ½ P's will turn the body round with a force equal to P. ½ P at A and ½ P at B turn the body round, and ½ P at B and ½ P at A have a tendency to give a progressive motion to G, consequently the force P acting at A loses none of its effect to turn the body, nor any of its driving effect. What will happen;—The point A will advance by two forces, the force of turning and the force of percussion, while the point B will advance by one force $= \frac{P}{2}$, and will turn in an opposite direction; the result will be the difference, so that the point B will recede while the point A will advance. Therefore this body will turn round a point V between G and B, which is called the centre of *spontaneous rotation.* See ANGULAR MOTION. GRAVITY. OSCILLATION. PERCUSSION.

3436.

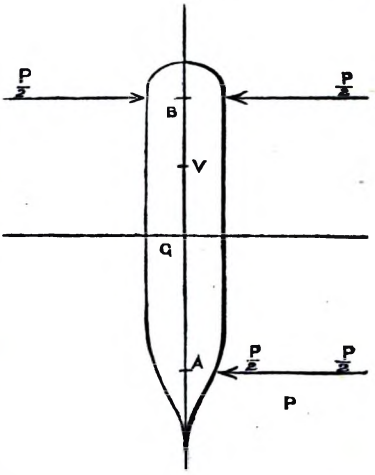

HACKLE OR HECKLE. FR., *Séran, sérin, séranzoir;* GER., *Hechel;* ITAL., *Pettine;* SPAN., *Rastrillo.*

See FLAX MACHINERY, p. 1498.

HAMMER. FR., *Marteau;* GER., *Hammer;* ITAL., *Martello;* SPAN., *Martillo.*

See HAND-TOOLS.

HAND-GEAR. FR., *Levier à main de distribution;* GER., *Handsteuerungshebel;* ITAL., *Messa in moto;* SPAN., *Palanca de trasmision de movimiento.*

The contrivances in a steam-engine for working the valves by hand; the starting gear.

HAND-PUMP. FR., *Pomp à main;* GER., *Handpumpe;* ITAL., *Tromba a mano;* SPAN., *Bomba de mano.*

A pump situated at the side of the fire-box in a locomotive, and worked by means of a lever when the engine is standing with steam up.

HAND-SAW. FR., *Scie à main;* GER., *Handsäge;* ITAL., *Segone;* SPAN., *Serrucho.*

See HAND-TOOLS.

HAND-TOOLS. FR., *Outils à main;* GER., *Handwerkzeuge;* ITAL., *Strumenti da mano;* SPAN., *Herramientas de mano.*

Hand and Foot Lathes.—John Anderson, the Superintendent of the Woolwich Machine Shops, in the P. I. M. E., 1862, observes, "In looking back to the early days of the turning lathe, before the introduction of the transfer principle in the sliding rest, it is interesting to observe that even then the lathe was a perfect instrument so far as it was a copying machine; those common lathes that were made with a perfectly round spindle-neck, if any such existed, would yield a round figure in the article under operation, providing that the cutting instrument was held steadily. And even in a still higher degree was correct workmanship attained in the old-fashioned dead-centre lathes; if the centre holes in the article to be turned were formed with moderate care, and the article held steadily between the centres, then the surface developed by the cutting instrument when firmly held would be as perfect a circle as one described by a pair of compasses."

With such apparatus, however, the chances of error were numerous, arising principally from the spindle-necks not being perfectly round; for even in the case of modern lathes a perfect spindle-neck is more rarely obtained than is generally supposed, as a close examination will show, the polygonal form being much more predominant than the true circle. There are lathes, even among

those of the most recent make, which have only to be handled gently to show their condition in this respect. Until recently such approximations to roundness were sufficient; but the extensive introduction of *accurate gauges* into workshops has, besides teaching the importance of precise dimensions, made engineers familiar with true circles. Hence there is now a much greater appreciation of positive truth of workmanship, and positive truths are always important; and in well-conducted workshops there is a constant striving after that condition and a gradual closing up of every avenue whereby error can creep in.

Such extreme accuracy is sometimes thought to be more costly than a less careful system; but practical men, like Anderson, have arrived at a contrary opinion, and are convinced that while extreme accuracy may be more expensive at the outset, especially from the want of workmen competent to carry it out, yet with a little perseverance the advantage arising from it will be clearly perceived, and the apparently inordinate cost will shortly be brought below that of less perfect arrangements. Many articles after being carefully turned and planed have to undergo a long course of filing and scraping before they are brought to the required quality of surface; whereas, if a small fraction of this outlay were spent in making the copy in the lathe spindle or the copy in the plane perfect as patterns, the great expense of subsequent fitting would be avoided. Many examples bearing on this point could be given were it required; an illustration may be named that came under Anderson's experience in the manufacture of guns at Woolwich Gun Factory. Certain rings about 1 ft. in diameter had to be fitted on corresponding cylinders, and were required to be perfectly easy to move, yet without shake, as any looseness in the fit rendered them useless; they had therefore to fit approximately like the Whitworth gauges. Several good new lathes were tried in vain; endless scraping and grinding had to be resorted to. Anderson was convinced that if the source of roundness were positively round, the result ought not to be out of truth. Measures were accordingly adopted to obtain perfection of roundness and steadiness in the lathe, at little more than the cost of fitting one of the rings; and the subsequent cost of the rings was thereby reduced from the value of nearly three days' work to less than an hour's. The lathe spindle became a true copy, the sliding rest a correct medium of transfer, and the combination of the two yielded the required truth and roundness. A similar case occurred in the manufacture of a number of large fire-cocks: the sockets and plugs were carefully turned, but they would not resist the water pressure without a great deal of scraping and grinding, until the lathe spindle was positively brought to perfect roundness, when the turning alone made them fit with scarcely any grinding. The lathe is a copying machine, and just as its bearing surfaces are so is the work produced.

The apparatus generally employed by wood and ivory turners is termed a foot-lathe, on account of its being driven by the foot in the same manner as the common grinder's wheel; some are constructed partly in metal and partly in wood, but those made entirely of metal are far superior to these, and are of the following construction;—

A, Fig. 3437, is the bed of the lathe, upon which two supports, called poppet-heads, rest; the surfaces of contact vary in form, in some beds both are flat, in others both angular, and in others one angular and the other flat.

3437.

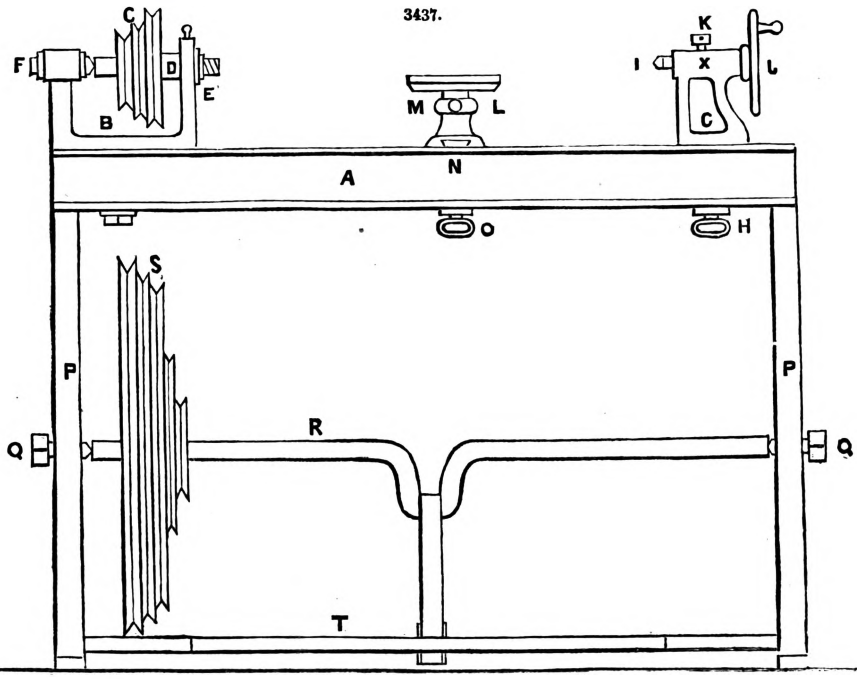

By many the angular or V beds are preferred, from the idea that the heads are more likely to retain their proper position than when resting on plane surfaces; but the latter, when accurately

planed and fitted, are quite as worthy of reliance, and far more convenient than the angular-bedded lathes.

B represents the head to which the chucks are attached, and by means of which the power requisite for rotating the work is applied. This poppet-head consists of a strong frame of cast iron F B E; in the standard E is fixed a hard conical bearing, in which one end of the mandrel D revolves, and by which it is supported, the other end resting against the hard conical point of a screw placed in a nut at F; by means of this screw the mandrel is kept tight up to its bearings, any tendency of the screw to shift being prevented by one or two nuts upon it, which are screwed up tight against the standard F.

At the bottom of the head is a solid projection, which is made to fit the opening between the sides of the lathe-bed, and by which the parallelism of the lathe-bed and mandrel is maintained. The head is firmly fixed in its position by a bolt, which draws a strip of metal up tight against the bottom of the lathe-bed. A number of groove pulleys G are attached to the mandrel, one of which is connected with the pulleys S on the driving shaft R by means of a cord of catgut or gutta-percha, although in a case of necessity a sash-line may be made to answer the purpose. The catgut is, however, the most satisfactory, on account of its great durability. The plan usually adopted for joining the ends is to screw on hooks and eyes; the end of the gut is slightly tapered and damped, so that the hooks and eyes may squeeze the gut into a screw rather than cutting it, by which latter the band would be much weakened.

It must not be used until the gut is dry and hard. Gutta-percha bands are united by heat, the ends being cut off obliquely, thus, [redacted], and gently heated by means of a hot piece of smooth clean iron, until soft, when they are firmly pressed together, and kept in that position until cold. This, of course, necessitates the stoppage of the lathe for some time, besides shortening the band every time it is united.

When the work is too long to be supported entirely by one end, a second poppet-head is required, which is of the form shown at C; this head is accurately fitted to the lathe-bed, and can slide upon it to allow of adjustment to the length of the work; it is fitted with a clamping screw H to fix it when in position, also a conical point I, called a centre, which is movable through a small space by the handle J, to allow the removal of the work from the lathe without shifting the poppet-head. The mandrel carrying the centre is fixed after adjustment by the capstan-headed screw K.

The next part of the apparatus to which our attention is called is the rest, upon which the operator supports the turning tool. There are two kinds, the common rest and the slide-rest; the former is that represented in our figure. M L is a short hollow column, provided with a foot sufficiently long to reach across the lathe-bed; in the bottom of the foot is planed a dovetailed groove N, which retains the head of a clamping screw O, but at the same time allows of a sliding motion when not clamped. From this it is evident that the rest can be placed and fixed in any position.

Within the hollow column is a cylindrical rod, which carries a straight strip of metal, the whole being raised or lowered by sliding the rod vertically in the column; when the proper elevation has been attained, the rest is fixed by a screw working in a thread cut in the thickness of the column.

The lathe-bed is supported on standards or frames P P, which also serve to carry the crank-shaft R by means of two conical-pointed screws Q Q, which enter countersunk recesses in the ends of the shaft. The shaft is made with one or two cranks, or throws, according to its length. This shaft is also fitted with grooved driving pulleys S, made of various diameters, in order to obtain any speed which may be required. The pressure imparted to the treadle T is communicated to the crank by a link with a hook at each end, or by a chain; some turners preferring the former, and others the latter.

We now proceed to consider the means by which the work is held in the lathe and caused to rotate with the mandrel.

Fig. 3438 represents the fork, prong, or strut-chuck, so called from the steel fork or prong *a*, which is fitted into the square socket of the chuck; this chuck is used for long pieces, the point supporting one end of the work, the other being supported by the back centre. The chisel edges on each side of the point take hold of the work and ensure its rotation. The fork being fitted into a square recess in the chuck may be replaced by drills, &c., or small pieces of wood or ivory to be turned. It is usually made of metal, and attached to the mandrel by an internal screw corresponding to that on the nose of the mandrel.

3438.

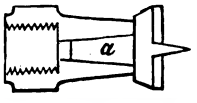

3439.

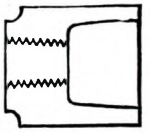

Fig. 3439 represents the hollow or cup-chuck; it is used for holding short pieces, or pieces that are to be turned out hollow. Its inside is turned slightly conical, so that the work may be driven tightly into it.

This chuck is usually made of boxwood, sometimes strengthened by a metal ring round the mouth of it; but this is scarcely necessary, as a very slight blow is sufficient to fix the work if it has previously been reduced to a form nearly approaching the circular by the chisel, paring knife, or other hand-tools.

3440.

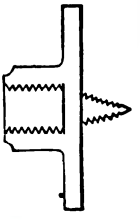

Fig. 3440 represents the face-plate or facing chuck; it may be made of iron or other suitable material.

This chuck is turned flat and perfectly true, and is fitted at its centre with a conical screw to hold objects to be turned on the face. This chuck can only be used when the hole made in the work is not objectionable, or can be plugged up. The screw should only be very slightly taper, otherwise the work will not hold when reversed.

Fig. 3441, a chuck for flat work, where a hole in the centre would be detrimental. It is a face-plate with three or more small spikes projecting from its surface to penetrate the material to be wrought, which is held against it by the back centre.

A plane face-plate is used where the work cannot be conveniently fixed to either of the two foregoing, as in the case of thin pieces of horn, tortoiseshell, and so on. The work is attached by means of glue, or of jewellers' or turners' cement.

3441.

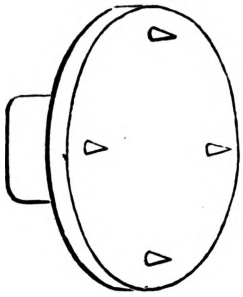

3442.

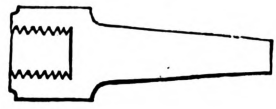

3443.

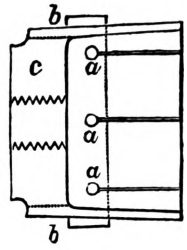

Fig. 3442 represents the arbor-chuck, usually made of brass. It is used for holding small hollow works or rings.

For very small work, Fig. 3438 is useful for holding the arbors in the place of a strut *a*.

Fig. 3443 represents a spring-chuck which is used for holding very slight work that requires to be hollowed out.

It is turned conical externally, the apex of the cone being to the left. A few holes *a a* are drilled through the chuck near its base and at equal distances from each other. From these holes saw kerfs or slits are cut longitudinally to the front of the chuck, which allow the chuck to expand slightly to take a firm hold of the work, and when the work has been forced into the chuck, the grip is rendered still more firm by drawing a strong ring towards the front of the chuck.

These chucks are sometimes made of wood, but those of metal are much neater and more convenient; they may be made of a piece of brass tube firmly driven on a wooden block.

A similar chuck is used for holding hollow work, but instead of being provided with an external ring, it is fitted with a short solid plug, which is forced forwards after the chuck has been inserted into the work. When long and slender pieces have to be turned, an extra poppet or a support is required to keep the work from shaking, or chattering, as it is termed. It is generally made of wood, and is formed similar to Fig. 3444. It consists of a head, in which is bored a hole *c* of the proper diameter, and a tail-piece fitted to the lathe-bed and sufficiently long to receive an aperture *b*, through which a wedge may be passed to hold it down firmly upon the lathe-bed.

3444.

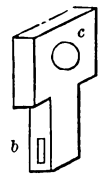

3445.

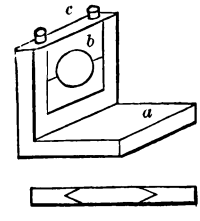

Another and more convenient form of support is shown at Fig. 3445; *a* is a cast-iron frame, having a foot fitted to the lathe-bed and furnished with a bolt and nut by which it is firmly bolted down to the lathe-bed; *b* is a block of wood fitted into the frame, where it is secured by the cross-bar *c*. An aperture of the required diameter is now bored in the block; it is then taken out of the frame and sawed in half, so as to form a top and bottom bearing; *d* shows a section of the frame; any other form of groove may be used, but we have selected the V on account of the ease with which the blocks may be fitted to them. One great advantage of the latter apparatus is, that the two bearings may be brought together when the hole is worn. When a slide-rest is used, this additional support should be attached to it; it will then keep close to that part of the work on which the tool is acting, by which a more satisfactory piece of work is turned out, and the trouble of shifting the poppet avoided. The application of a little grease to these bearings will sometimes be found beneficial.

3446.

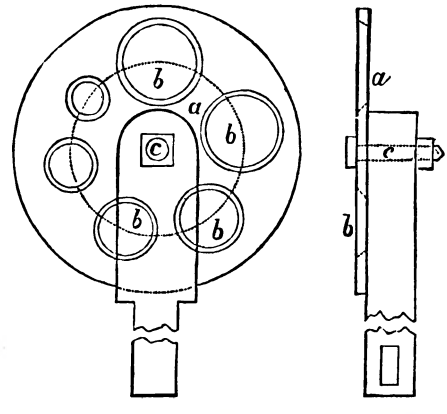

An apparatus called a boring collar, somewhat similar to that just described, is used for supporting the ends of pieces of which the ends are to be bored, and which are too long to be held by the cup-chuck alone. It consists of a plate similar to a face-chuck, Fig. 3446, through which a number of conical holes are bored, whose centres are equidistant from the centre of the plate, so that when the latter is turned on its axis any hole can be brought exactly in a line with the two centres. The plate may be attached to a standard similar to either of the foregoing.

It may sometimes occur that the work to be turned, as a wheel, the foot of a stand, and so on,

may be rather too large for the lathe; in this case it is convenient to have frames truly planed and fitted. Such a frame is shown at Fig. 3447. It is made of cast iron, the top being fitted to the bottom of the poppet, and the bottom being fitted to the lathe-bed, care being taken that the mandrel is retained parallel to the lathe-bed. The rest may be blocked up in a similar manner, or a temporary rest may be made of a piece of bar-iron bent to a suitable form.

3447.

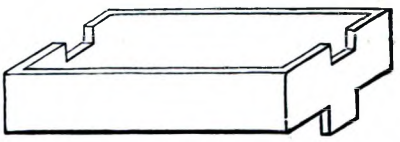

In some cases it will be convenient to have a self-acting slide-rest, as for turning large screws, spirals, and so on. The slide-rest is shown in Figs. 3448, 3449. Fig. 3448 is an elevation, and Fig. 3449 is a plan. *a* is a slide which fits the lathe-bed very accurately, but will yet slide freely upon it, and in a direction exactly parallel to the axis of the object to be turned. *b* is another slide fitted to the lower one and sliding upon it in a direction at right angles to the lathe-bed. It is worked by a screw attached to the lower slide, which gears into a nut fixed to the bottom of the slide *b*. Upon the slide *b* is fitted a small slide *c*, upon which the turning tool is fixed by means of a clamp. This slide is moved in a direction parallel to the lathe-bed by means of a screw attached to the slide *b*, gearing in a similar manner to that in the slide *a*. The whole slide may be moved along the bed either by hand or by means of a screw running along the side of the bed and gearing into a nut made in two halves, so that it may be thrown into or out of gear by closing or opening the nut. The use of this screw, which is called the leading screw, requires a different form of fixed poppet-head, and constitutes what is called a screw-cutting lathe, on account of its suitability to that process.

3448.

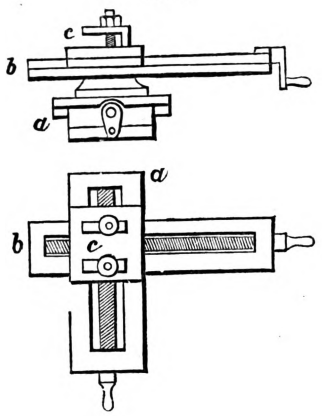

3449

3450.

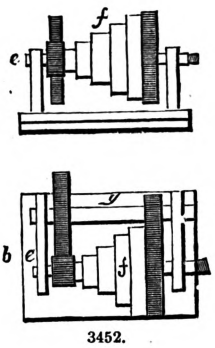

3452.

3451.

The poppet-head generally fitted to self-acting lathes is represented in Figs. 3450 to 3452. *a* is a side elevation, *b* a plan, and *c* a front elevation. This head is fitted with speed pulleys *f*, which may be made fast to the mandrel, so as to drive it direct or loosened, and geared by a tooth-wheel with the shaft *g*, which again gears into the mandrel, which is supported in bearings at each end. The wheels on the shaft *g* are thrown out of gear with those on the mandrel by sliding the shaft endwise in its bearings. It is retained in or out of gear by a pin passing into the bearing, which rests against a groove turned on the shaft *g*. On the end *e* of the mandrel a toothed wheel is slid and retained there by a nut. This wheel may act directly upon another placed on the end of the leading screw, or may be connected with it by means of one or two intermediate wheels, according to the speed required and the direction of the intended screw.

It is evident from this arrangement that any ratio between the speeds of the mandrel and leading screw may be obtained either for cylindrical turning or screw cutting.

Fig. 3453 is a very complete double-gear foot-lathe, with planed bed, standards, anti-friction treadle, with chain, crank, and driving wheel, hand-rest, face-plate, drill-chuck, and two centres.

Fig. 3454 is of a single-gear foot-lathe, with planed bed, standards, anti-friction treadle, with chain, crank, and driving wheel, hand-rest, face-plate, drill-chuck, and two centres.

Fig. 3455 is of an amateur's lathe, with fast and loose headstock, hand-rest, and metal table.

Fig. 3456 is of a compound slide-rest; another arrangement of compound slide-rest is shown in Fig. 3457. Figs. 3437 to 3452 are employed to illustrate principles; Figs. 3453 to 3457 are not fancy sketches, but of machines manufactured in the highest style by J. and H. Gwynne, of Hammersmith, and by William Muir and Co., of Manchester.

Figs. 3458, 3459, are two views of Benjamin Merritt's machine for boring angular holes. B is the frame of the machine, D is a driving shaft, and E E bevel-gear for communicating motion to the operating shaft. The novelty of Merritt's boring machine consists in attaching around the operating shaft of an ordinary boring machine a cam H, on the under-side of which is a path of the form of the hole to be bored. In this path runs a truck attached to a box having a rack and pinion which give motion to the hollow main shaft as well as to an inside shaft. To the bottom of

3453.

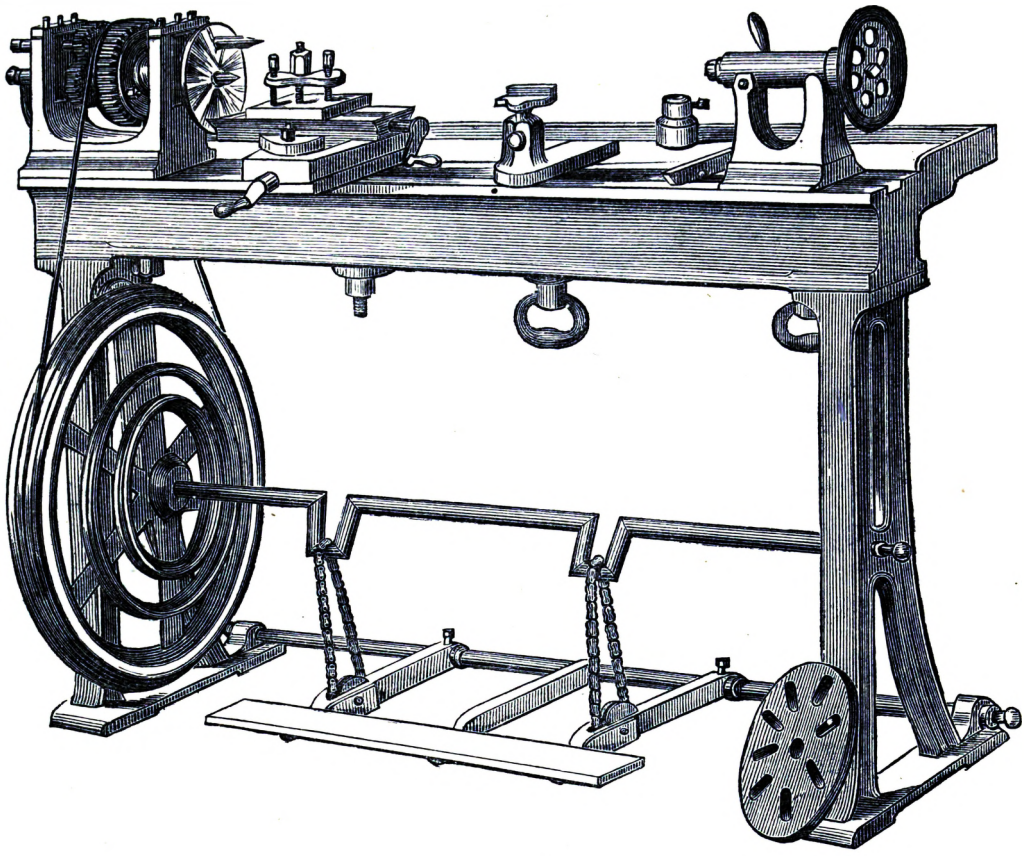

3454.

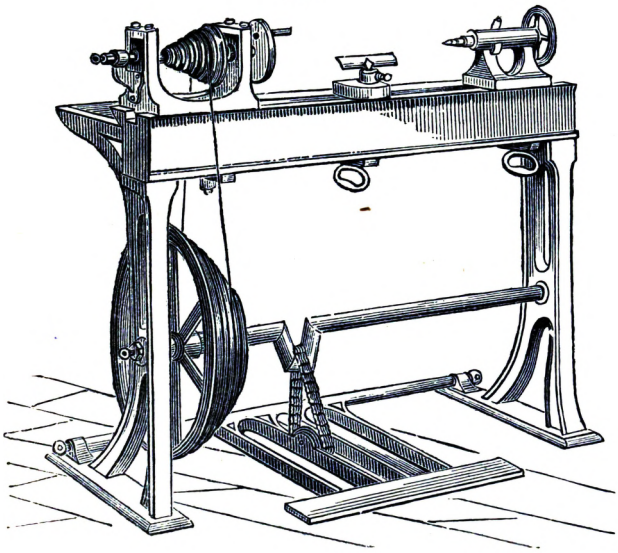

3455.

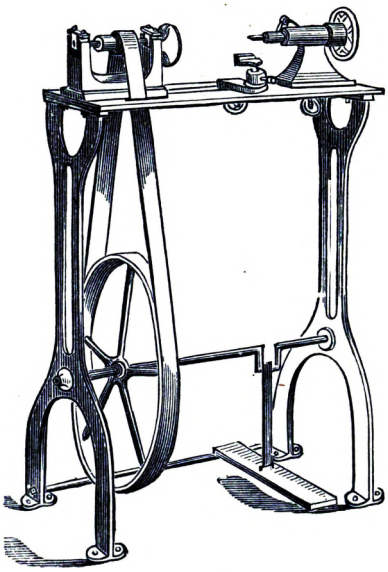

the main shaft circular cutters *a* are attached, and a tug screw to draw the auger into the work. Inside the circular cutters and attached to the inside shaft is a pinion which gears into two racks,

3457.

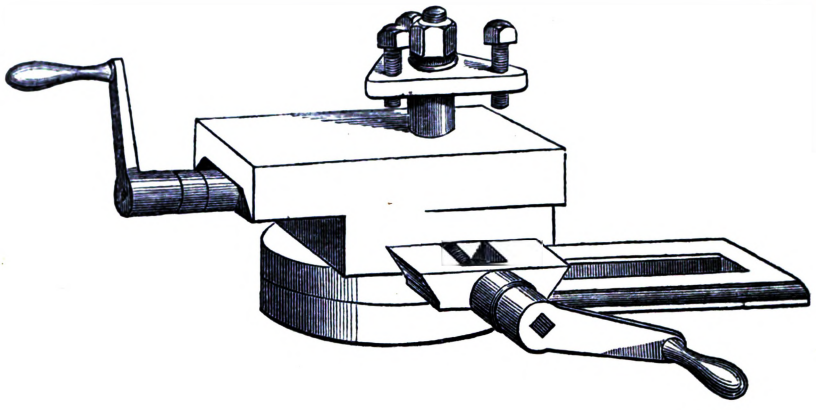

3456.

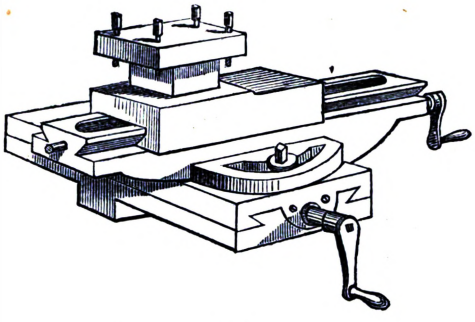

3458.

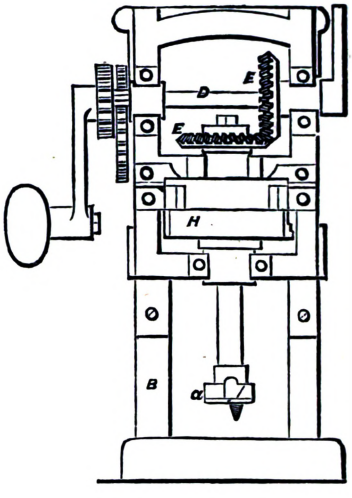

3459.

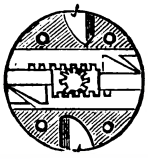

Fig. 3459, having cutters on opposite sides so arranged that when the main shaft rotates, the inner shaft, by the operation of the travelling truck in the cam, turns one-half way round, causing the cutters gradually to project from the line of the circular hole to the angle, as at J J; the operation of the two cutters being simultaneous, the angles are thus cut to form the angular hole.

Dividing Machines are for marking the divisions upon mathematical and other instruments, common rules and scales, glass tubes, &c.; they are of two kinds, designed respectively to divide the straight line and the circle.

Machines for Dividing the Straight Line.—The principal part of these machines consists of a screw of from 15 to 24 in. in length, the pitch of which is some exact measure of an inch, or some other chosen unit; in French instruments the pitch is always equal to 1 millimètre. It is obvious that the accuracy of this screw determines the merit of the machine.

The screw is placed horizontally through a fixed shoulder, and works into a female screw, to which the dividing instruments are attached; the frame C, Fig. 3460, bearing these instruments, slides upon guides parallel to the axis of the screw. It will be seen that when the screw is turned in the required direction by means of a crank, the female screw advances a linear quantity proportional to the angular quantity turned by the screw. The part C is furnished with a *tracer* to mark the divisions; when the divisions have to be marked upon metal, the tracer or graver is of steel, but in the case of a glass tube a diamond is required. The piece to be divided is placed parallel to the screw upon a fixed table, and at a convenient distance. The graver may be raised by turning it about an axis parallel to the screw, during the time the latter is in motion; when the screw has revolved sufficiently, the graver is pulled down upon the piece to be divided, and a motion perpendicular to the axis of the screw is imparted to it by pressing it gently upon the piece in order to mark the division; the part to which the graver is affixed being arranged to move perpendicularly.

The general arrangements which we have described above are those which are adopted for all kinds of engines for dividing the straight line. But these kinds differ widely from each other with respect to accessory means employed for regulating the distance and the length of the division-

marks. As we cannot describe every modification of engine, we will select one which seems to be contrived in the most rational manner.

Fig. 3460 represents the machine used by M. Salleron, whose instruments are justly esteemed throughout France for their accuracy. A A is a metal slab upon which the part C slides. The

3460.

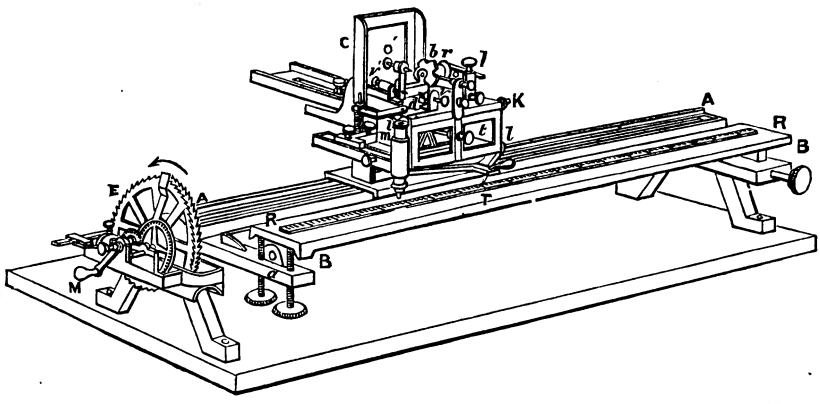

screw runs down the middle of this slab, and is turned by the crank M. B B is the plane table, also of metal, upon which the piece R R to be divided is placed. This table turns about the point *a*, so that by means of the thumb-screw the piece may be brought exactly parallel to the motive screw. The graver T may be slightly raised by turning about the axis *l m*; at the same time, the part *i k l m* may turn about the axis *i k*. In this way the graver may be brought into contact with the piece to be divided at the farthest point its construction will allow; then pressing the graver gently upon the piece, the part *i k l m* returns of itself to its original position, and the graver marks the division.

The motion of the graver is regulated by the following arrangements;—To the part *i k l m* are fixed two vertical pieces *o* and *h*. Parallel to the piece *o* is another vertical piece turning about its lower end; this piece is not shown in the figure, but the wheel *b* which it bears on its upper end is there represented, as well as the little plane *d* with which it is provided laterally. This third piece is jointed to the frame by means of the horizontal piece *t*. It follows that when the graver is brought forward by turning the frame *i k l m* about *i k*, the third piece turns about its lower end, and its upper end is thrown forwards, either by the plane *d* meeting the end of a fixed screw *v*, or by the wheel *b* coming in contact with the end of a screw *o* working in the piece fixed to the frame. When, on the contrary, the frame is brought back towards its position when at rest, the third piece to which we have already alluded, turns in the contrary direction about its lower end, and its upper end is thrown backwards, either by the plane *d* meeting the end of a fixed screw *v'* or by the wheel *b* coming in contact with the end of the screw *o'*. Let us suppose, in the first place, that we have to trace a series of divisions of equal length; the distance of the screws *v* and *v'* is regulated so that the stroke of the graver may be of the required length, and the screws *o* and *o'* are withdrawn, so that the wheel *b* may not come in contact with them. The plane *d* strikes, in this case, alternately against the screws *v* and *v'*; the excursions of the frame *i k l m* are thus regulated in a constant manner, and the graver traces divisions of equal length. Suppose now it is required to trace divisions of unequal length, a longer one for every fifth, for example. The excursions of the frame will no longer be regulated by the plane *d*, because the screws *v* and *v'* will have been sufficiently withdrawn; in this case they will be regulated by the wheel *b*. This wheel is provided with notches. When the portion of its circumference between two notches comes in contact with the screws *o* and *o'*, the excursion of the graver is small and it marks a small division; but if the screws *o* and *o'* enter a notch, the excursion of the graver is greater and it marks a longer division.

To regulate these long and short divisions, there is upon the axis of the wheel *b* a small ratchet-wheel *r*, which is furnished with it. A click at the end of the piece *h* works into the teeth of this ratchet. When the graver is brought forward, the end *h* is brought back, the click presses upon the ratchet and turns the wheel *b*; when the graver returns to its place, the click escapes from the teeth of the ratchet without turning it. It is evident that at each division traced, the wheel *b* turns by a certain quantity, and this quantity is regulated in such a way that at each fifth division, for example, the wheel *b* presents one of its notches to the screws *o* and *o'*, which causes a longer division to be marked. A microscope at *m* enables the operator to see whether or not the divisions are marked regularly. Various means are provided to ensure to the motion of the graver a direction exactly perpendicular to the axis of the motive screw.

Let us now examine the mechanism for regulating the interval of the divisions. The wheel E upon the axis of the screw is divided into 100 parts; hence when it turns by *n* divisions, the screw advances by *n* hundredths of a millimètre. By means of a system of gearing we may turn the wheel E by the crank M and observe the number of divisions of this wheel which pass a fixed point. But in order to render the operation independent of the attention of the operator, an arrangement has been devised for regulating the interval somewhat automatically, thus avoiding a chance of error. This arrangement is represented in plane by Fig. 3461. The axle of the crank M is independent of the screw V. Upon this axle is fixed a ratchet-wheel R having 100 teeth. Opposite and upon the axis of the screw is fixed a similar wheel R'. The first is provided with a click *c* (represented apart) which works into the teeth of the second. If the crank is turned in the

direction of the arrow in Fig. 3460, a direction which we will call direct, the click of the wheel B presses against the teeth of the wheel R′, and the crank thus turns the screw; but if the crank is turned in the direction contrary to that of the arrow, a direction which we will call inverse, the click slides over the teeth of the wheel R′ without turning it. The screw, therefore, turns only when the crank turns in the direct direction. The wheel R bears, opposite its 100 teeth, 100 equal divisions; opposite the *zero* of these divisions is fixed a stop *b*. A second similar stop *b′* is affixed to the end of an index placed between the two wheels upon the axis of the crank. By varying the position of the index, we may easily regulate the angular distance which separates the two stops. These stops meet two projecting pieces *e* and *e′* upon a rule K H moving between guides in the direction of its length. When the crank turns in the direct direction, the motion continues until the stop *b* meets the projection *e*, placed in its way; when the rotation takes place in the inverse direction, the motion continues until the stop *b′* meets the projecting piece *e′*. It is evident that the motive screw can advance only by the quantity corresponding to the angular space of the two stops, and that by an alternating motion, limited by the projecting pieces themselves, the operator moves the screw forward by rigorously equal quantities regulated beforehand. If, for example, it be required to move the screw forward half a millimètre at a time, we have only to place the index so that the angular space which separates the stops shall be exactly 180°. The plane of the upper face of one of the projections being supposed to coincide exactly with the lower face of the other, in order not to be obliged to consider the thickness of the projections.

3461.

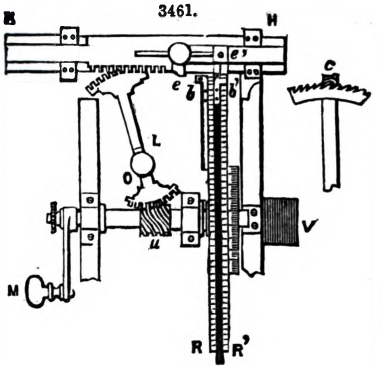

This arrangement is sufficient to ensure the equality of the spaces which separate the divisions whenever this space does not exceed 1 millimètre. But if the interval is to exceed 1 millimètre a special arrangement is required; this arrangement is the following;—

Upon the axle of the crank is an endless screw *u*, working into the end of a lever L, which turns about an axis O. The other end of this lever works into a straight rack upon the rule K H. Consequently the motion of the crank drives the rule backwards or forwards in the direction of its length. All that is required, therefore, is to regulate the interval of the projections so that the stop *b* may meet the projection *e* at the end of a number of turns and a fraction of a turn corresponding to the space which is to separate the divisions, the stop *b′* being in contact with the projection *e′* at the beginning of the motion.

By means of these arrangements we are able to mark divisions, the interval of which may vary from $\frac{1}{100}$ of a millimètre to several millimètres.

Machines for Dividing Circles.—In these machines the circle to be divided is placed concentrically upon a horizontal plateau or table, capable of turning about an axis passing vertically through its centre, and put in motion by a tangent screw by means of a crank. A graver moving in the direction of the diameter, in order to be capable of reaching the limb, whatever the radius of the circle may be, traces divisions directed towards the centre. Fig. 3462 shows this arrangement. A is the table turning about a vertical axis, the lower end of which may be seen in *z*; B is the circle to be divided, placed concentrically to the table; *c d* and *e f* are guides parallel to a diameter of the table, and upon which the part C, similar to that of Fig. 3460, slides, carrying a graver which moves in the direction of a diameter; M is the crank which turns the tangent screw V, which screw imparts motion to the table. This screw is furnished with a contrivance for regulating the length of the intervals similar to that which we have described above. By means of this contrivance we regulate the quantity by which the tangent screw is to turn, and consequently the angular quantity by which the table A is to turn for each of the divisions to be traced. This table has usually 720 teeth, each one of which, consequently, answers to half a degree. Its axis is a steel frustum of a cone resting upon a spring in a bronze socket fixed to the support T.

3462

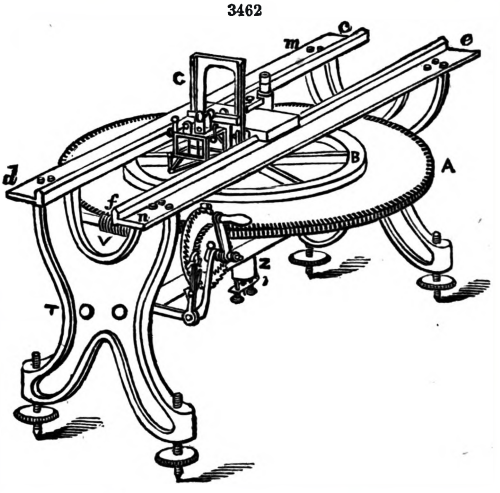

The chief difficulty of the operation consists in properly centring the circle to be divided. To do this, it is first fixed upon the table with wax, and the distance from every point in the circumference of the circle to the centre of the table carefully measured. When this distance is the same in all points, the circle is fixed with a mixture of wax and resin, and the operation of dividing the limb proceeded with. The operation of centring is a delicate one, but it is indispensable, especially when it is required to divide the limb of an instrument used for astronomical purposes.

Improved Wood Screw and Driver.—The slotted head of the common wood screw is frequently split when much force is required to seat it or to remove it, and every mechanic has been annoyed

by the slipping off of the screw-driver blade from the head of the screw. To provide a remedy for these objections is the object of P. N. Jacobus, the inventor of the screw and driver shown in Figs. 3463, 3464. The screw-head has three V-shaped notches cut equidistant in the edge, instead of the single-cross slot. The screw-driver, seen in perspective in Fig. 3463, has three corresponding jaws which by a simple arrangement automatically open and close upon the screw-head, Fig. 3464.

3463.

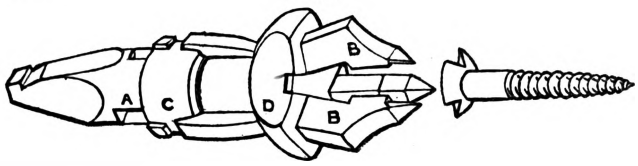

3464.

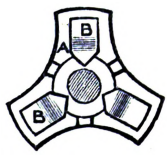

The stock A is intended to fit into a bit-stock, and is hollow for the larger part of its length, and has three longitudinal slots in which slide the jaws B, all moved simultaneously by a sliding ring C, with which they engage. They are opened and closed by means of the incline of their forward portion sliding through corresponding apertures in the collar end of the implement, designated by D in Fig. 3463.

When held in an upright position, the jaws down, the combined weight of jaws and ring causes them to fall, and the points of the jaws open sufficiently to receive the head of an ordinary screw. Now, if pressure is exerted, the stock is forced down and the jaws compressed, griping the screw-head with an energy proportioned to the force exerted; the harder the pressure the greater the tenacity of the grip. The edges of the jaw-points, when they are seated on the screw-head, project sufficiently to cut a countersink to seat the head, preventing the necessity of using a separate tool for this purpose; in fact, unless in very hard wood, there will be no necessity for previously boring a hole to receive the screw. When the screw is nearly home, the driver may be raised and the head driven to its seat. In removing a screw this driver is equally effective. One advantage of this device may not be apparent at first sight—that is, the absolute connection between the screw and driver, which will enable the workman to drive the screw into wood at any angle, perfectly governing its direction. The increased strength of the screw-head from this style of construction, the certainty of grip on the screw, and the entire control over the course of the screw, are the important features of this little device.

Silver's Hand Machine for Boring Wheel Hubs.—Fig. 3465 is a perspective view of a self-centring hub borer, which adjusts and holds the hub in position while being bored, and forms a square shoulder in the hub at the bottom of the bore. The chuck frame consists of three equidistant radial arms, having dovetailed slots in which slide the jaws A, having corrugated grips or faces for engaging with the surface of the wheel hub and holding it firmly. That portion of the jaw that projects above the radial arms is a nut B, in which works a screw, the outer end of which is squared to receive a wrench C, and the inner end carrying a bevelled pinion engaging with a bevel-gear turning loosely on the shank of the spider or jaw frame. By this means, whichever screw is turned, the two others, by the medium of the pinions on their ends, and the central gear, must have a common and simultaneous movement. Thus the jaws will be advanced to or receded from the centre in perfect accord, and bring the centre of the hub exactly coincident with the centre of the machine.

3465.

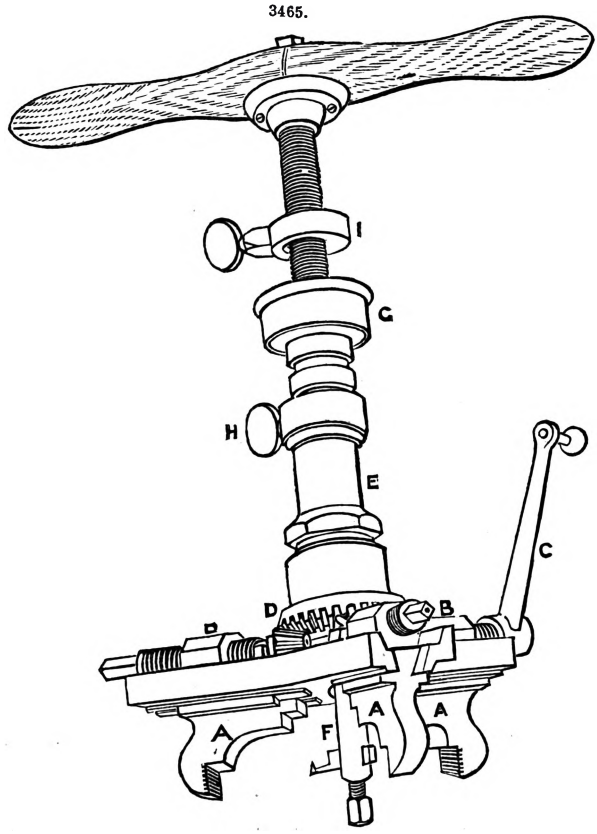

That portion of the jaw-chuck above the wheel D is screwed to a stock E, both being hollow to receive a boring mandrel F, carrying a cutter at its lower end. The upper portion of this mandrel is threaded with a screw of about ten to the inch, sufficient for ordinary feed for wood cutting, and has a handle similar to that of an auger. The feed-nut G with which the mandrel thread engages

is of peculiar construction. It is seen plainly in Fig. 3466. The nut is in two halves, A, which slide in a dovetail slot cut across a circular bed-piece B. The whole is covered by the cap, Fig. 3467, and the half nuts are moved to or from the screw by a pin or screw in each projecting into semi-spiral slots A in the top of the cap. Pins on the lower portion of this cap are seated into an annular channel on the boss of B, Fig. 3466, so that the cap may be turned without lifting from place. This combined nut and cap is held in place in the stock E, when the machine is in use, by a thumb-screw H, Fig. 3465, that fits in an annular groove on the shank of the circular bed-piece or block B, Fig. 3466.

3466.

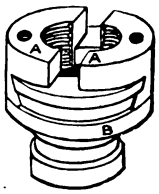

3467.

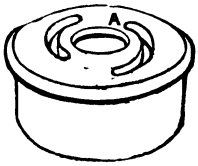

3468.

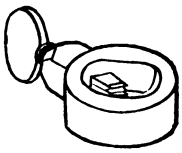

Fig. 3468 is a gauge for determining the depth of the hole to be bored; seen also at I, Fig. 3465. It has an oblong hole, a portion of its interior being threaded to fit the screw of the mandrel; and on the opposite side is a gib, also threaded on its end, fitting in a chamber, and moved to place by a thumb-screw. These opposite threaded portions prevent injury to the screw of the mandrel when the gauge is set up.

When a hub is to be bored, the gauge is secured on the mandrel at a proper height above the cap of the feed-nut to bore the required depth of hole in the hub. The hub being held in the jaws, the mandrel is turned, the tool being fed by the feed-nut at the top of the stock E, until the gauge comes in contact with the cap of the nut. The set screw H is then slightly loosened, which permits the feed-nut to turn with the mandrel, and a few turns of the handle forms a perfectly square shoulder at the bottom of the hole. To withdraw the mandrel from the bored hub, it is only necessary to give the cap of the feed-nut a slight turn to the left, separating the two halves of the nut, when the mandrel can be lifted out.

Improved Joiners' Plane.—The objects of the invention of G. Buckel, shown in Fig. 3469, are to give a control over the thickness of the shaving and depth of the cut by the pressure of the hand, and to prevent the drag of the bit on the board when the plane is drawn back. The stock of the plane is made in two parts, the upper portion A, which holds the bit, being pivoted to the lower part B at the rear end by a screw C passing through metal guide-plates D on each side the plane. The front end of the upper portion is raised from the lower portion by means of a spring E, which, when the pressure of the hand on the front of the plane is withdrawn, lifts the upper portion together with the bit or plane-iron. The amount of this movement is governed by the thumb-screw F.

3469.

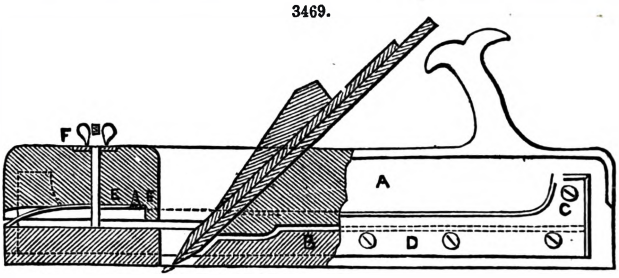

Adzes, Axes, and Hatchets.—An adze is a hand-tool used by carpenters for chipping. It is formed with a thin arching blade, and has its edge at right angles to the handle. The edge is bevelled only on the inside, and the handle is easily removed when the tool is to be ground. Fig. 3470 is of a carpenter's adze; Fig. 3471 a ship-carpenter's adze; Fig. 3472 a cooper's adze;

3470. 3471. 3472. 3473. 3474. 3475. 3476

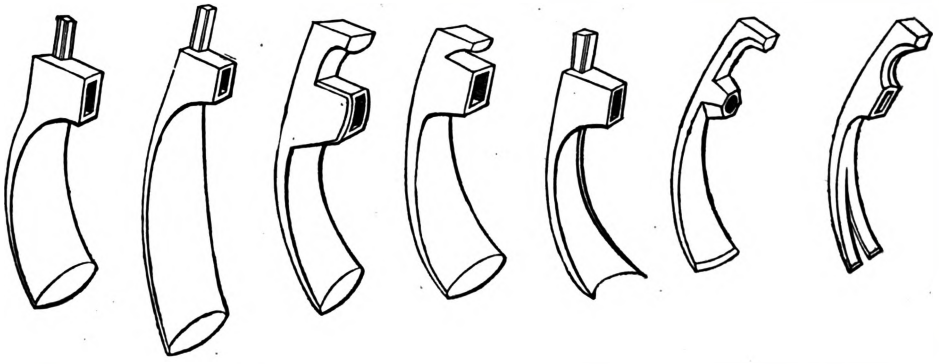

Fig. 3473 an improved wheeler's adze; Fig. 3474 a spout adze; Fig. 3475 a cooper's adze, with a sexagon eye; and Fig. 3476 a cooper's nail adze. This hand-tool, to be perfect, must have the centre of gyration of the moving mass in the cutting edge.

An axe is a hand-tool usually of iron, with a steel edge or blade, for hewing timber, chopping wood, and so on. It consists of a head with an arching edge, and a wooden helve or handle. Fig. 3477 is of a colonial felling axe; Fig. 3478 an Australian felling axe; Fig. 3479 a wheeler's axe; Fig. 3480 a north country ship-axe; Fig. 3481 a Dutch side-axe; Fig. 3482 a Brazil axe; Fig. 3483 a broad axe; Fig. 3484 a Kent axe; Fig. 3485 a Scotch axe; Fig. 3486 a blocking

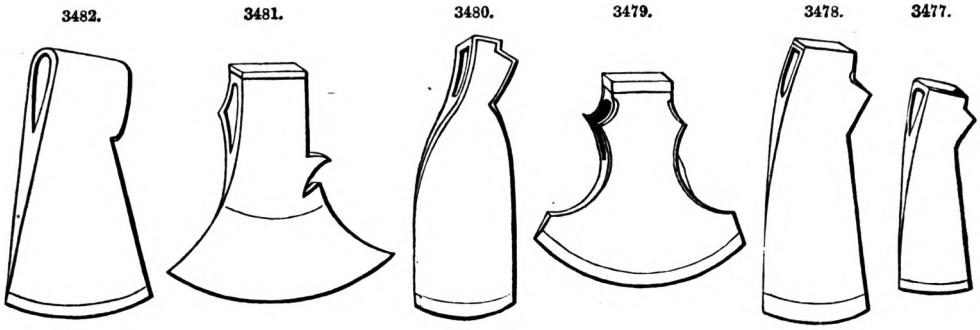

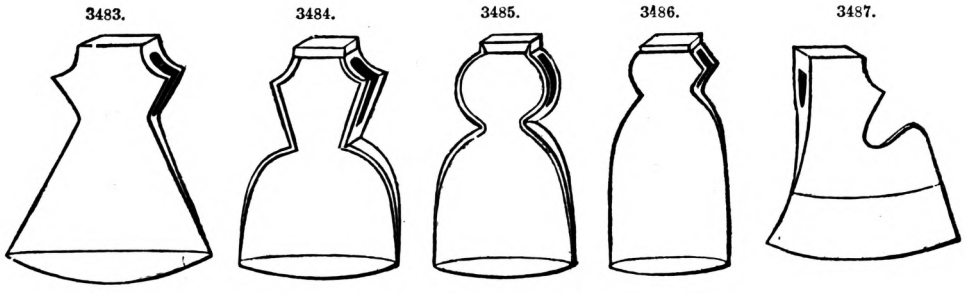

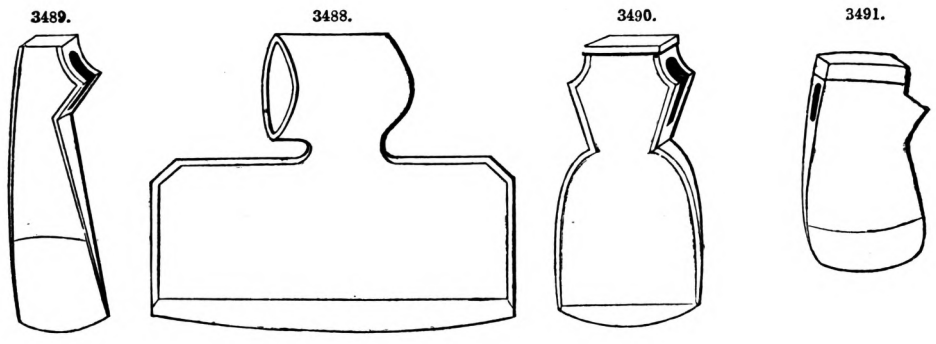

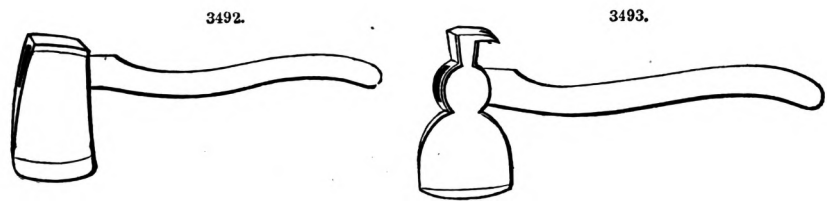

axe; Fig. 3487 a coachmaker's axe; Fig. 3488 a cooper's axe; Fig. 3489 a long felling axe; Fig. 3490 a common ship axe; and Fig. 3491 a Kentucky wedge-axe. This important tool must have either the centre of percussion or centre of gravity of the moving mass directly over and in the plane of the cutting edge. Fig. 3492 is of a Canada hatchet, handled; Fig. 3493 an American shingling hatchet, with claw; Fig. 3494 a shingling hatchet, with hammer head; Fig. 3495 an iron-handled butcher's cleaver; Fig. 3496 a bright meat chopper; Fig. 3497 a Norfolk and Suffolk single-edge bill, tanged and handled; Fig. 3498 a Yorkshire socket bill; Fig. 3499 a socket lopping bill; Fig. 3500 a Nottingham tanged bill, handled; and Fig. 3501 a strapped switch hook, single or double hand. When the cutting edge is required to throw chips, the plane passing

through the centre of percussion must also pass through the bevel, and not through the cutting edge of the blade.

3494.

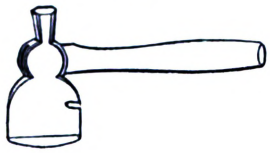

3495.

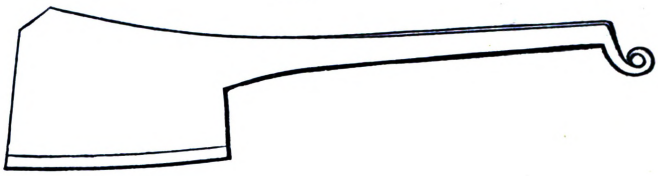

3496.

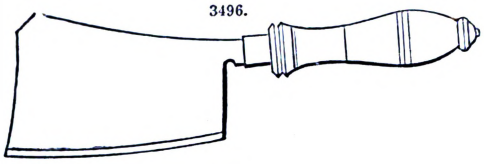

3501.

3497.

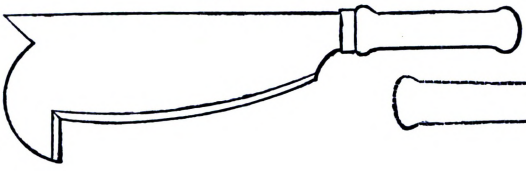

3498.

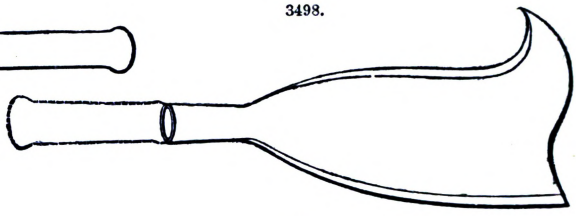

3499.

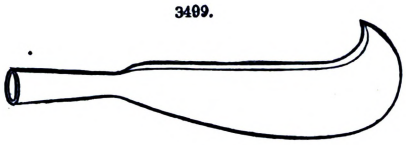

3500.

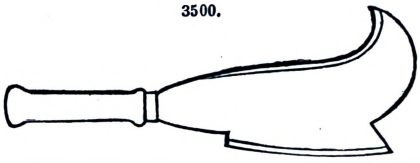

Anvils and Swage-blocks.—See ANVILS. Fig. 3502 is an anvil for light edge-tools; Fig. 3503 an anvil for heavy edge-tools; Fig. 3504 a peculiar-shaped anvil, used in the forging of shears; Fig. 3505 a saw anvil; Fig. 3506 a sickle anvil; Fig. 3507 a pocket-knife blade anvil; Fig. 3508 a single hand file anvil; Fig. 3509 a table-knife blade anvil; and Figs. 3510, 3511, swage-blocks.

3502.

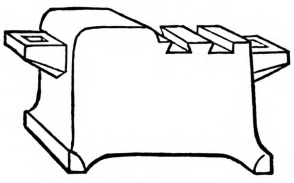

3503.

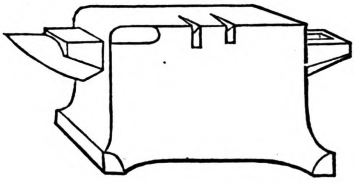

3504.

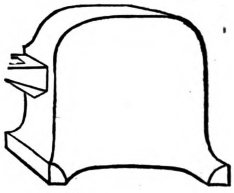

3505.

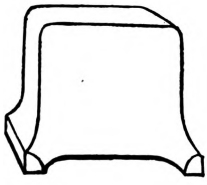

3506.

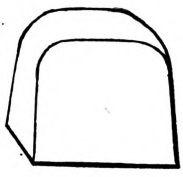

3510.

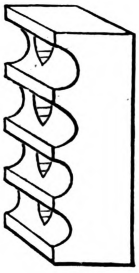

3511.

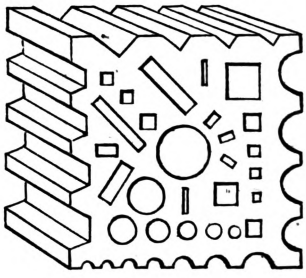

3507.

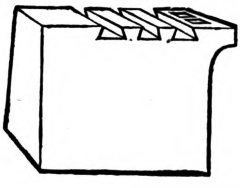

3508.

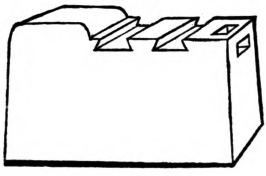

3509.

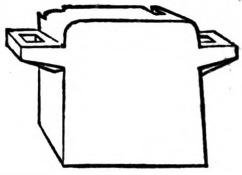

Tin and Coppersmiths' Tools.—Fig. 3512 is a block hammer; Fig. 3513 a concave hammer; Fig. 3514 a rivet set; Fig. 3515 a groove punch; Fig. 3516 a hollow punch; Fig. 3517 a teapot neck tool; Fig. 3518 a tea-kettle bottom stake; Fig. 3519 a kettle lid swage; Fig. 3520 a funnel

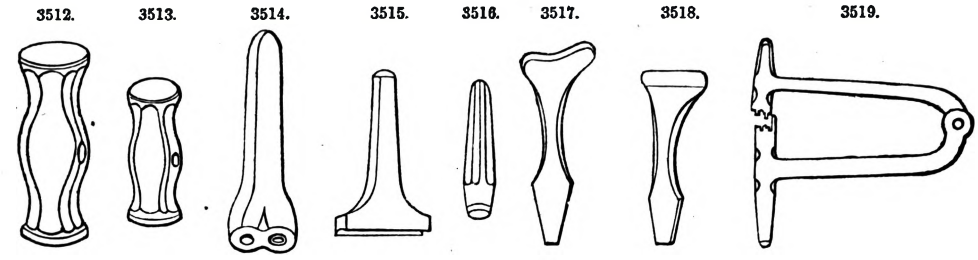

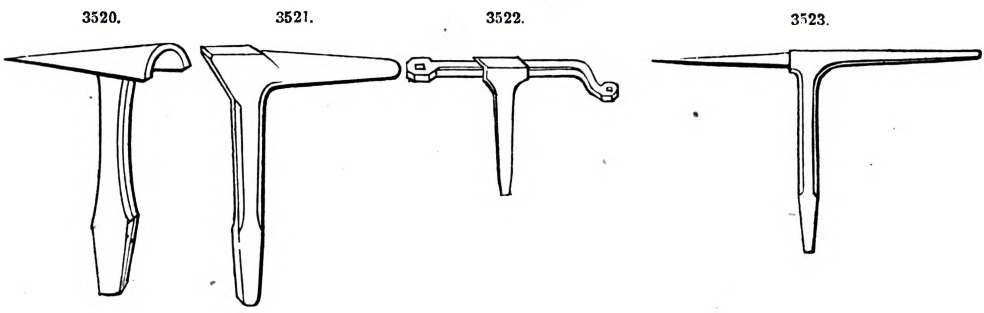

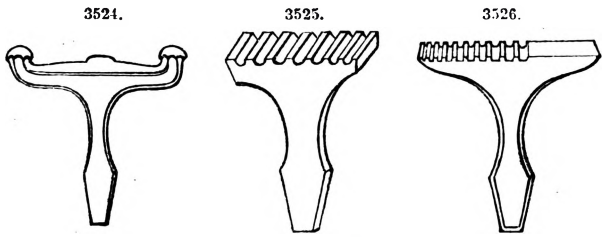

stake, Fig. 3521 a side stake; Fig. 3522 a tinman and brazier's horse; Fig. 3523 a beck iron; Fig. 3524 a saucepan bellie stake; Fig. 3525 a grooving stake; Fig. 3526 a creasing iron.

Fig. 3527 follies; Fig. 3528 stock shears; Fig. 3529 block shears; Fig. 3530 a bottom closing

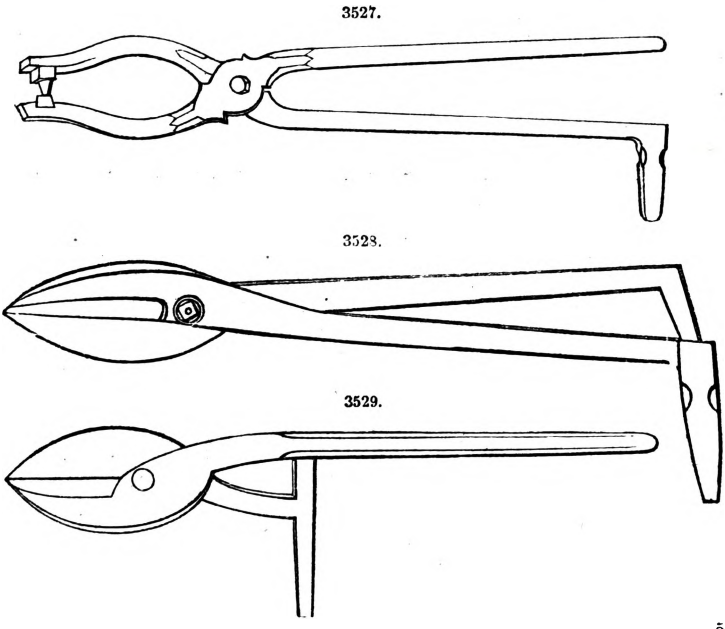

machine; Fig. 3531 goldsmiths' and dentists' rolls; Fig. 3532 a jeweller's mill; Fig. 3533 guillotine shears.

3530.

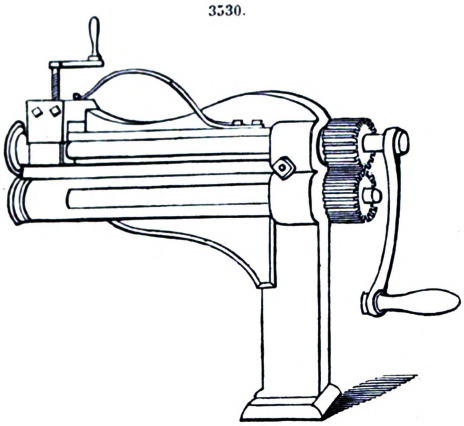

3531.

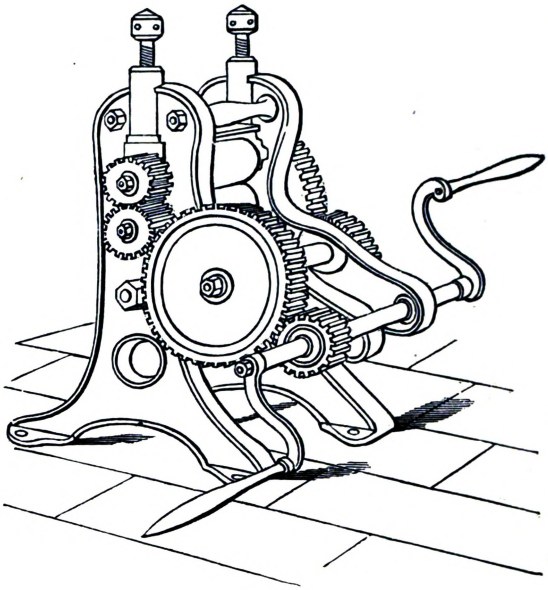

3532.

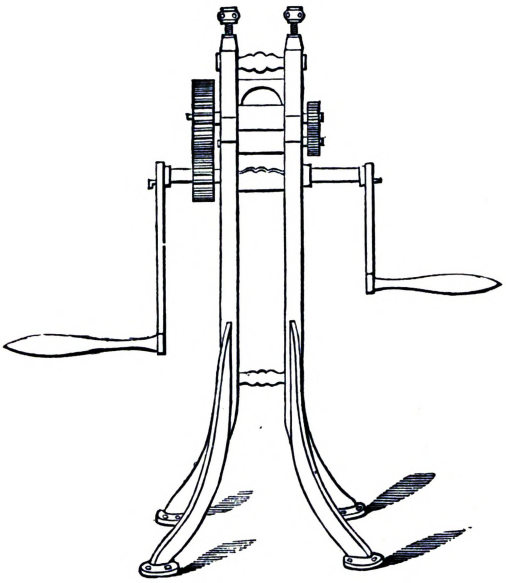

3533.

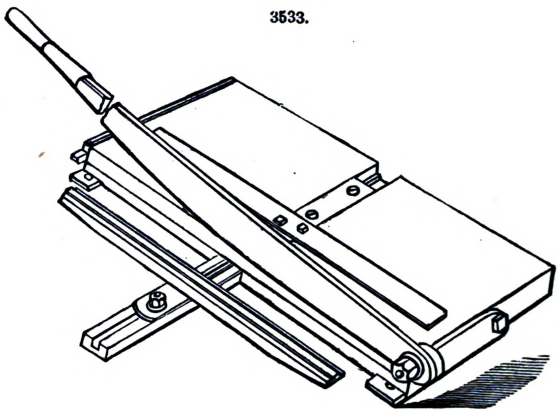

Hammers.—A hammer is an instrument for driving nails, beating metals, and the like, usually consisting of a metallic head fixed crosswise to a handle. See STEAM-HAMMER. Figs. 3534 to 3537 are forms of engineers' and mechanics' hammer-heads; Figs. 3538 to 3543 boiler-makers'

3534. 3535. 3536. 3537. 3538. 3539.

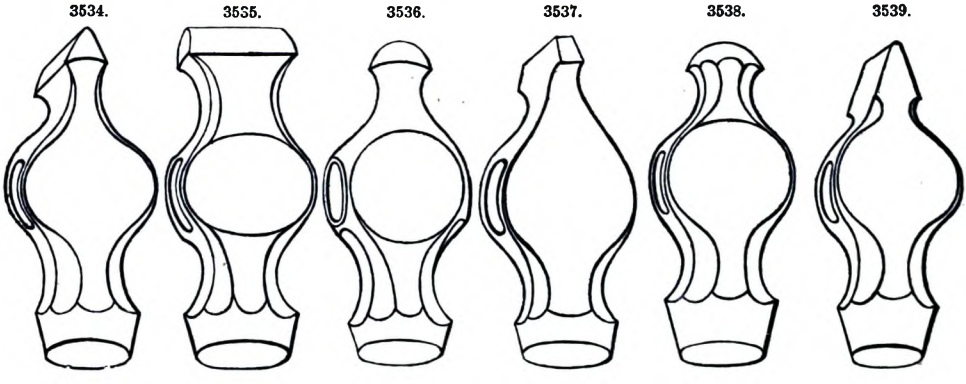

hammer-heads; Fig. 3544 a sledge hammer-head; Fig. 3545 a contractor's hammer-head for stonework; Fig. 3546 a hammer-head for riveting; Fig. 3547 a mason's hammer-head; Fig. 3584 a shingling hammer-head; Fig. 3549 a ship-carpenter's hammer-head; Fig. 3550 a coach-trimmer's

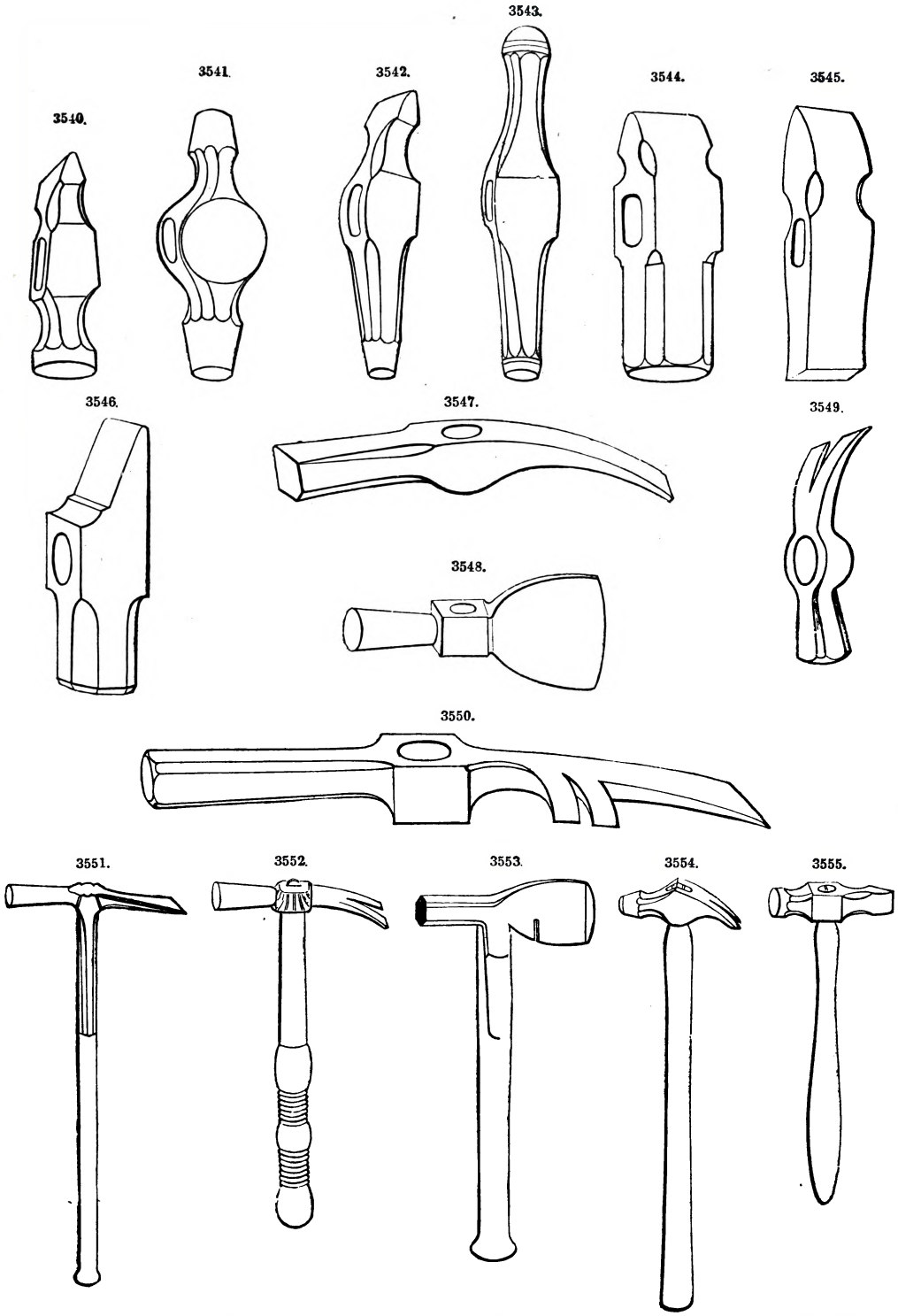

hammer-head; Fig. 3551 a saddler's hammer; Fig. 3552 a London glazier's hammer; Fig. 3553 a lathing hammer; Fig. 3554 a farrier's shoeing hammer; Fig. 3555 a plumber's hammer; Fig. 3556

a slater's hammer, with pick and claw; Fig. 3557 a brick hammer; and Fig. 3558 a fireman's hatchet or tomahawk.

3556.

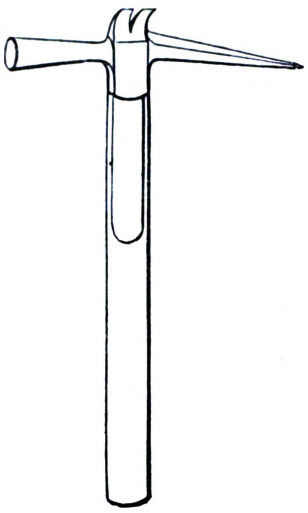

3557.

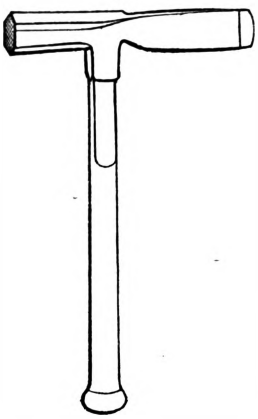

3558.

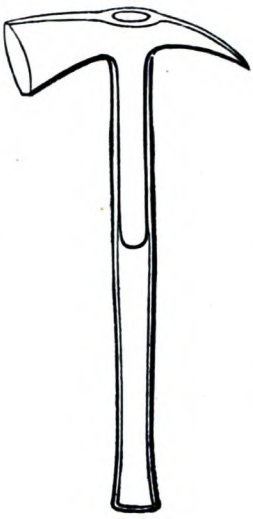

The handle of a hammer must be so formed and fixed that an operator may deliver blows without shock to his hand and arm; in this case the centre of percussion of both head and handle and the point struck must be in the line in which the centre of percussion is forced to move. It often happens that the centre of gravity or the centre of gyration of a hammer has to be directed on a given point; this is effected by giving to the head and handle peculiar shapes.

Fig. 3559 is an arrangement of a hammer for striking bells. The spring below the hammer raises it out of contact with the bell after striking, and so prevents it from interfering with the vibration of the metal in the bell.

Fig. 3560 is of a tilt or trip hammer. In this the hammer helve is a lever of the first order.

3559.

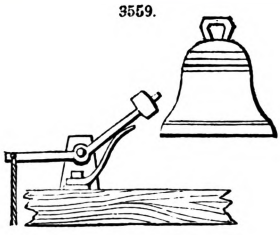

3560.

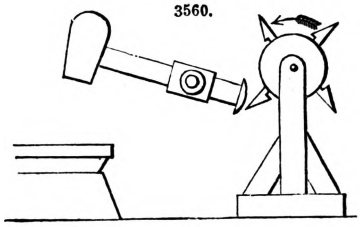

3561.

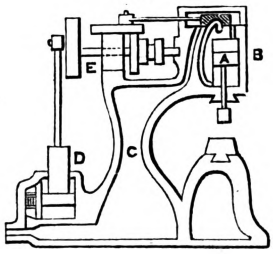

3562.

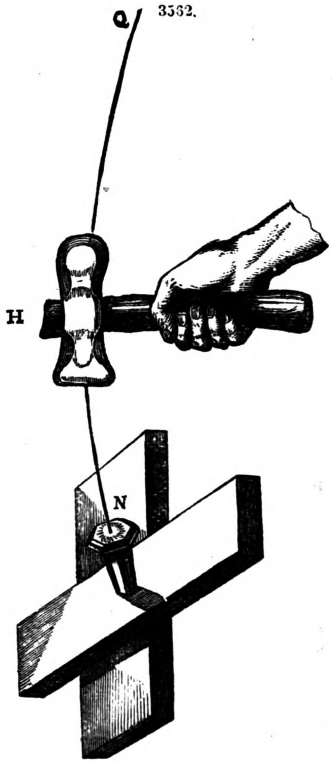

Fig. 3561 exhibits the mechanical combinations of Grimshaw's compressed air hammer. The head of this hammer is attached to a piston A, which works in a cylinder B, into which air is

admitted—like steam to a steam-engine—above and below the piston by a slide-valve on top. The air is received from a reservoir C, in the framing, supplied by an air-pump D, driven by a crank on the rotary driving shaft E.

The succeeding examples indicate how the power of hammers may be calculated.

Example.—Suppose a hammer H, Fig. 3562, strikes a nail N, and drives it $\frac{1}{4}$ of an inch, the hammer weighs 11·58 lbs., and in delivering the blow it passes over the space Q N = 10 ft. in a second; required the force in pounds delivered by the hammer upon the head of the nail. 10 ft. : 1″ :: $\frac{1}{48}$ ft. : $\frac{1}{480}$″. Hence the time occupied in driving the nail $\frac{1}{4}$ of an inch cannot be less than $\frac{1}{480}$ of a second = t.

$$m = \frac{11\cdot58}{32\frac{1}{6}} = \cdot36\,; \qquad \therefore\ \mathbf{F} = \frac{m}{t} \times v = \cdot36 \times 480 \times 10 = 1728 \text{ lbs.}$$

∴ The force in pounds delivered upon the head of the nail is nearly = a ton.

Let us take another example, and suppose a large hammer, weighing 1930 lbs., moving with a velocity of 40 ft. a second, and to strike a mass of iron which it indents; the indentation is $\frac{1}{2}$ in. deep with a surface area of 16 sq. in.; after the blow is struck the hammer rebounds 2·5 ft. What is the force in pounds delivered on the sq. in. by a blow of this hammer? $\frac{1}{2}$ in. = $\frac{1}{24}$ of a foot; then 40 ft. : 1″ :: $\frac{1}{24}$ ft. : $\frac{1}{960}$″; hence the time occupied in making the indentation cannot be less than $\frac{1}{960}$ of a second. But $\mathbf{F} = \frac{m}{t} \times v$. (See Essential Elements of Practical Mechanics, by the Editor of the present work.) The mass of this hammer = $\frac{1930}{32\frac{1}{6}} = 60$; then in this case $\mathbf{F} = \frac{m}{t} \times v = 60 \times 960 \times 40 = 2304000$ lbs., which is the force in pounds delivered upon 16 sq. in. ∴ $\frac{2304000}{16} = 144000$ lbs. on each square inch. $\frac{40^2 \times 1930}{32\frac{1}{6}} = 96000$ units of work in the hammer (Essential Elements of Mechanics, p. 97). 1930 × 2·5 = 4825 units of work in the rebound of the hammer; hence 96000 − 4825 = 91175. Then if x be the area $\frac{1}{24}$ ft. the depth of the iron displaced by the blow, we have $x \times 144000 \times \frac{1}{24} = 91175$ units of work. ∴ x = 15·196 sq. in. the area for a uniform depth of $\frac{1}{2}$ in., as if the iron was displaced by a punch.

Saw.—A saw is an instrument for cutting and dividing substances, as wood, iron, and so on, consisting of a thin plate or blade of steel, with a series of sharp teeth on one edge which remove successive portions of the material by cutting or tearing.

3563.

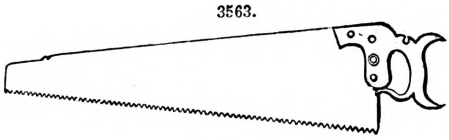

3564.

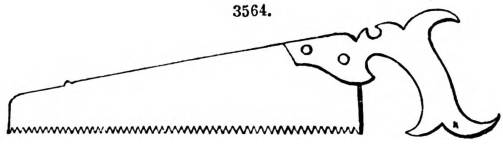

3565.

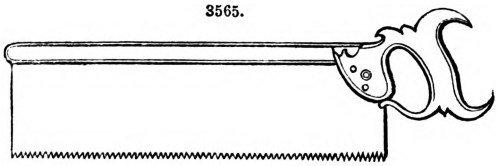

3568.

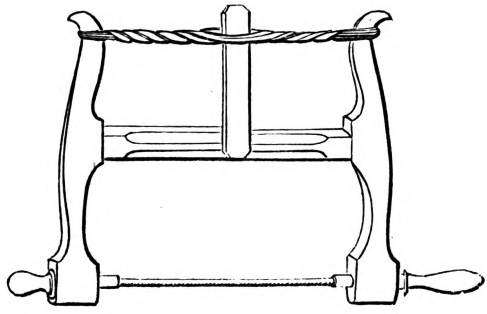

3566.

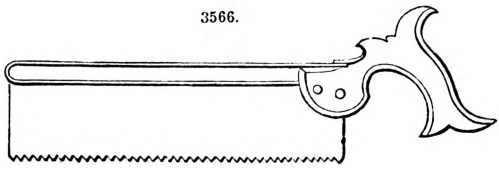

3567.

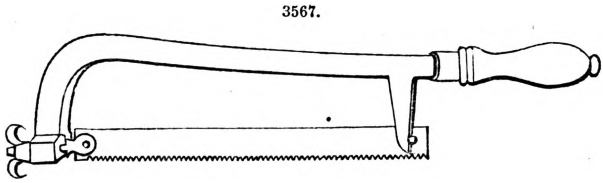

Fig. 3563 is a hand, panel, and ripping saw; Fig. 3564 is a grafter saw; Fig. 3565 a tenon saw; Fig. 3566 a dovetail saw; Fig. 3567 an iron bow-saw; and Fig. 3568 a turning saw in its frame.

Coopers' Tools.—One of the few things that man has perfected is the barrel, hogshead, or cask; it can be filled, emptied, and removed from place to place with greater ease than any other form of body containing an equal quantity. Figs. 3569 to 3571 are of coopers' drivers for tightening

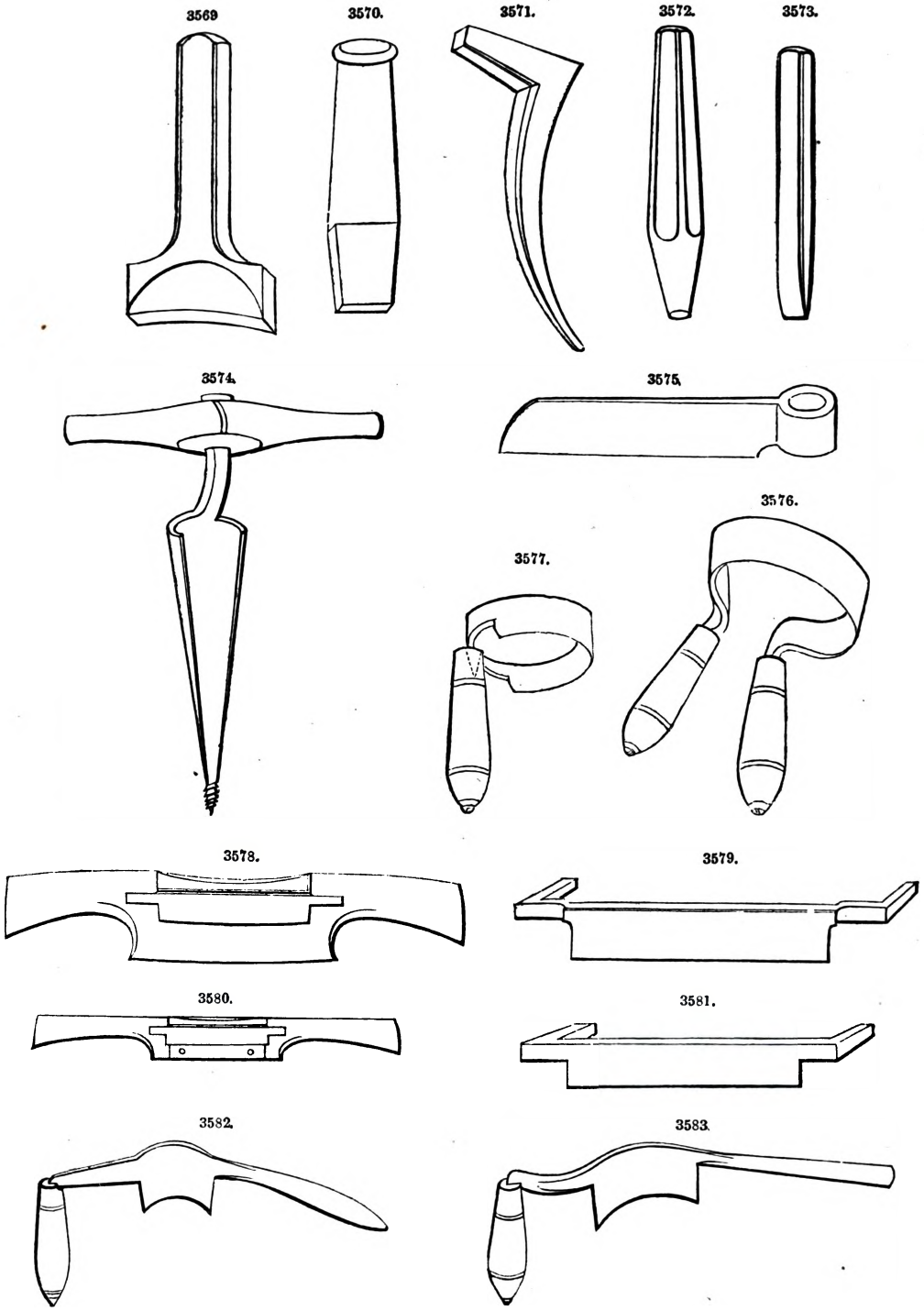

the hoops of a cask; Fig. 3572 a cooper's punch; Fig. 3573 a cooper's chisel; Fig. 3574 a bung borer; Fig. 3575 a cooper's froe; Fig. 3576 is a cooper's two-hand round shave; Fig. 3577 a cooper's round shave; Fig. 3578 a cooper's shave, and Fig. 3579 a cooper's shave-iron; Fig. 3580 a common spokeshave, and Fig. 3581 a common shave-iron; Fig. 3582 a cooper's jigger knife;

Fig. 3583 a London jigger knife; Fig. 3584 a brewer's gimlet; Fig. 3585 a cooper's vice; Fig. 3586 a cooper's bick-iron, used principally for punching holes in hoop iron; and Fig. 3587 a cooper's flagging iron.

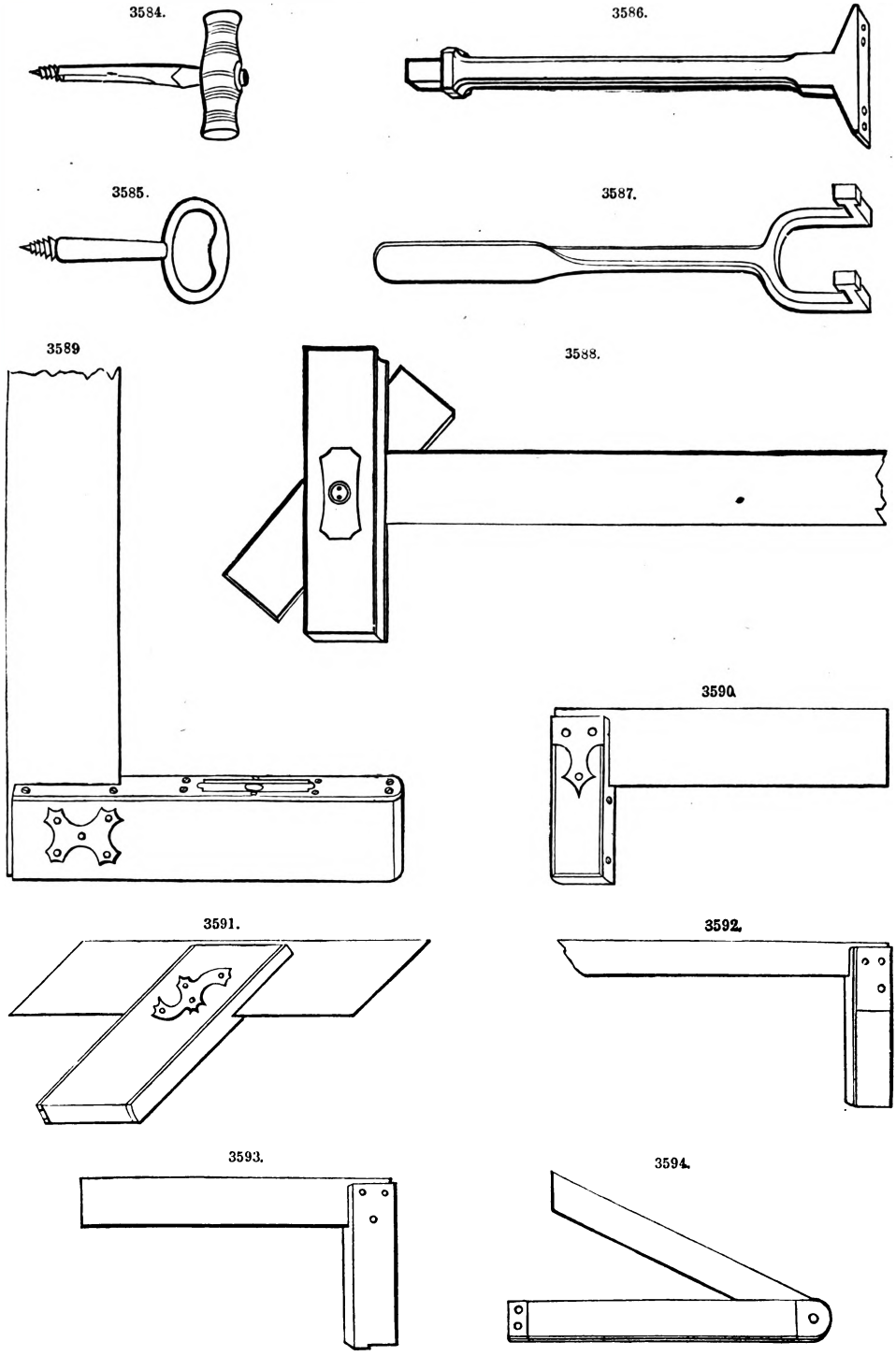

Squares and Bevels.—Fig. 3588 is a T drawing square; Fig. 3589 an ordinary square, with a level attached; Fig. 3590 a common brass-mounted square; Fig. 3591 a mitre square; Fig. 3592 a bricklayer's square, London pattern; Fig. 3593 a brass-stocked sash square; Fig. 3594 an angle

bevel; Fig. 3595 an improved metallic frame sliding bevel; and Fig. 3596 a boat-builder's bevel with two brass blades.

3595.

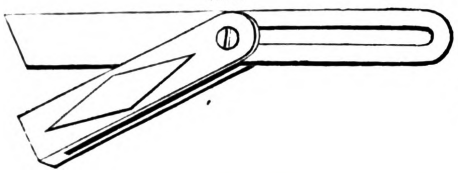

3596.

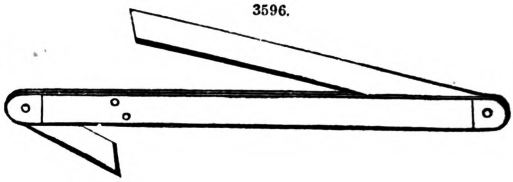

Engravers' Tools.—Fig. 3597 is of a square graver; Fig. 3598 a lozenge graver; Fig. 3599 a flat-edge graver; Fig. 3600 a bent square graver; Fig. 3601 a bent lozenge graver; Fig. 3602 a round

3597.

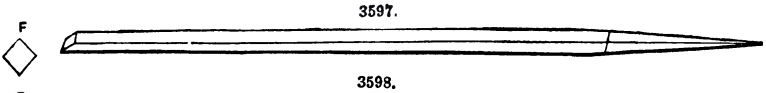

3598.

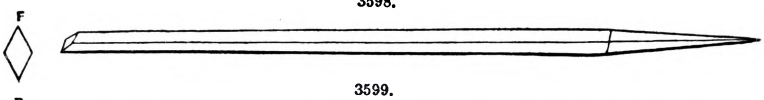

3599.

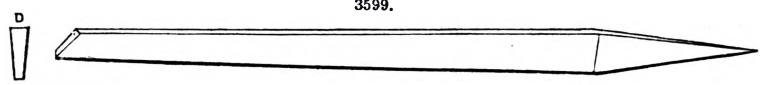

3600.

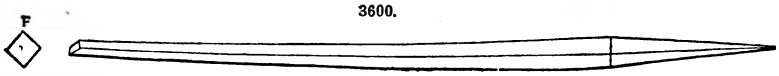

3601.

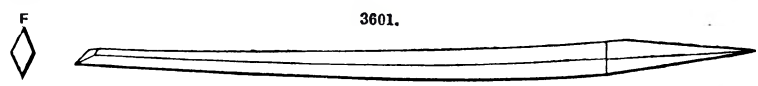

3602.

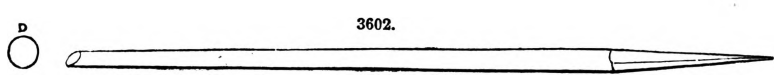

3603.

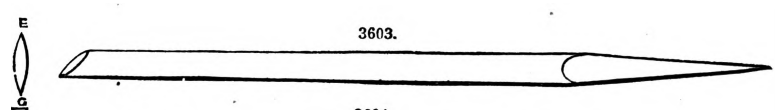

3604.

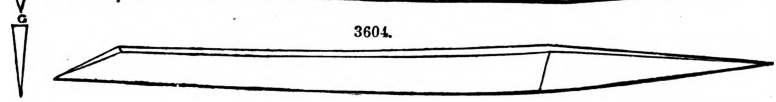

3605.

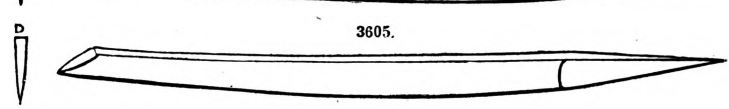

3606

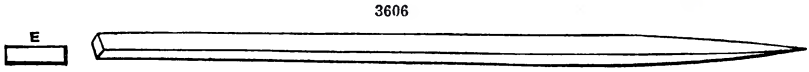

3607

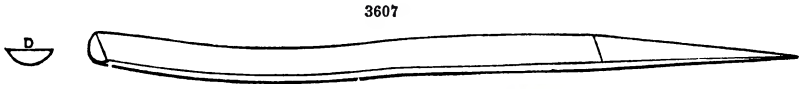

3608.

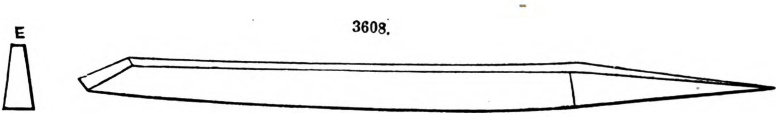

3609.

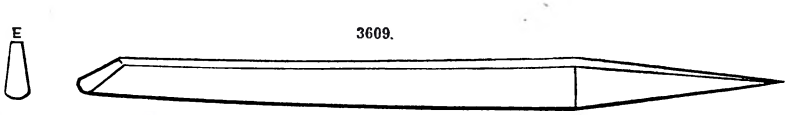

graver; Fig. 3603 an oval graver; Fig. 3604 an engraver's knife; Fig. 3605 a flat oval graver; Fig. 3606 a flat engraver's chisel; Fig. 3607 a half-round bent engraver's chisel; Fig. 3608 a flat

scooper; Fig. 3609 a round scooper; Fig. 3610 a double needle; Fig. 3611 an etching point; Fig. 3612 a twisted etching point; Fig. 3613 a scraper; Fig. 3614 an oval burnisher; and Fig. 3615 a round burnisher, bent.

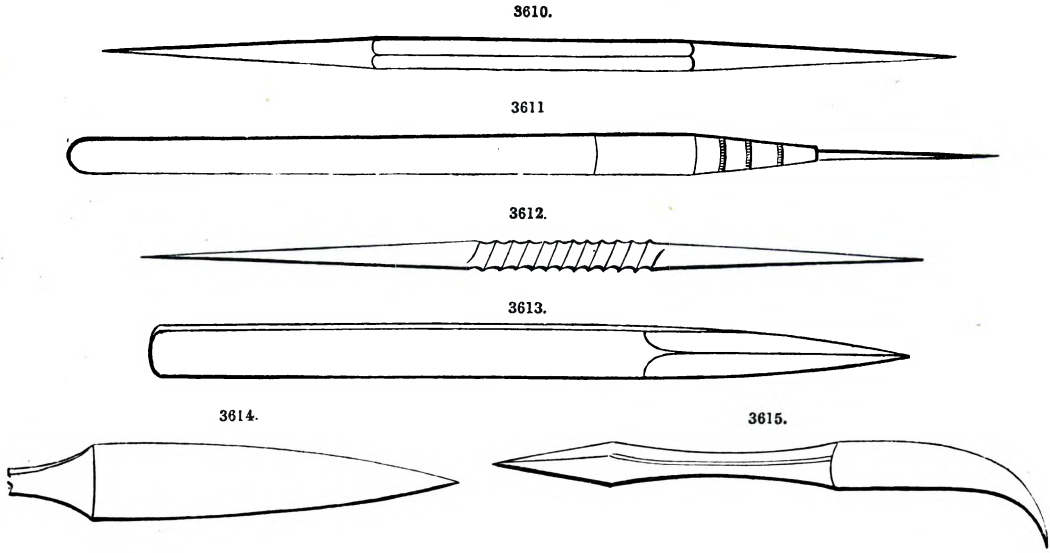

Metal-turning Tools. — The turning of metal is effected by a slow motion, comparatively speaking, with respect to the turning of wood, ivory, or bone, which require in most cases a rapid motion; yet wood-turning tools require a less obtuse angle to form the cutting edge than the tools

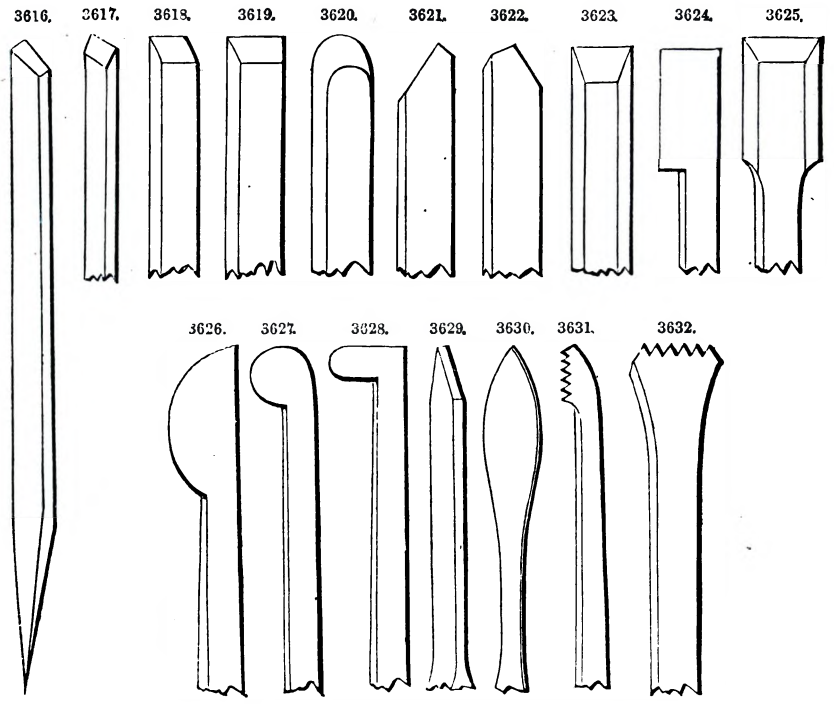

employed to turn iron, brass, or steel. The planes forming the cutting edge of metal-turning tools make a solid angle which generally exceeds 60°. Figs. 3616 to 3632 are of a set of turning tools for metal, Figs. 3631, 3632, being especially for screw cutting.

Files and Rasps.—A file is a steel instrument having the surface covered with sharp-edged furrows or teeth, used for abrading or smoothing other substances, as metals, wood, and so on. A *file* differs from a *rasp*, in having the furrows made by straight cuts of a chisel, either single or crossed, while the rasp has coarse, single teeth, raised by the pyramidal end of a triangular punch.

A *bastard file* is a file intermediate between the coarsest and the second cut. Figs. 3633 to 3650 show the various cuts of files and rasps 12 in. long; the cuts of longer and shorter files are larger and smaller in proportion. See FILE-CUTTING MACHINERY.

3633.

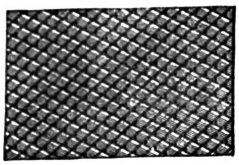

Rough.

3634.

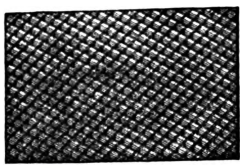

Middle.

3635.

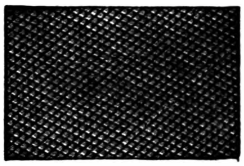

Bastard.

3636.

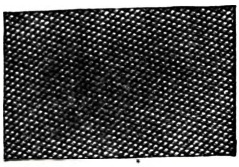

Second Cut.

3637.

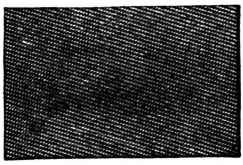

Smooth.

3638.

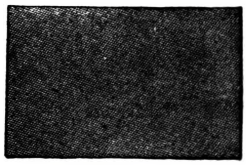

Dead Smooth.

3639.

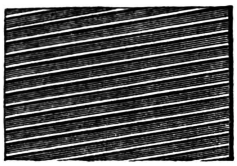

Rough.

3640.

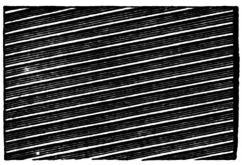

New Cut.

3641.

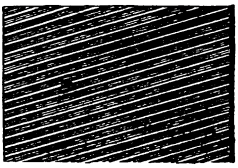

Middle.

3642.

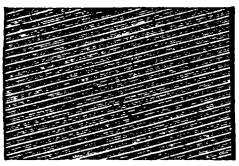

Bastard.

3643.

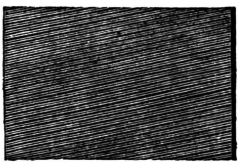

Second Cut.

3644.

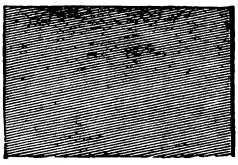

Smooth.

3645.

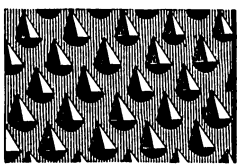

Horse.

3646.

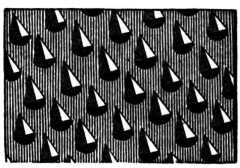

Rough.

3647.

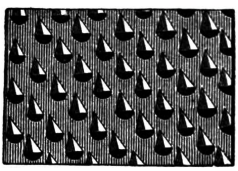

Middle.

3648.

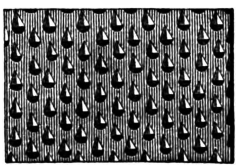

Bastard.

3649.

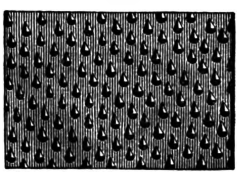

Second Cut.

3650.

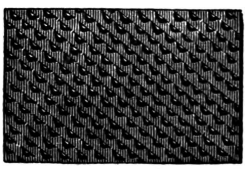

Smooth.

Fig. 3651 is of a smooth needle file; Fig. 3652 a round-off file; Fig. 3653 a three-square taper file; Fig. 3654 a bastard knife file; Fig. 3655 a bastard riffler; Fig. 3656 a saddle-tree rasp; Fig. 3657 a round rasp; Fig. 3658 an improved shoe rasp; Fig. 3659 a horse mouth rasp.

3651.

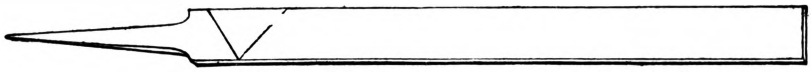

3652.

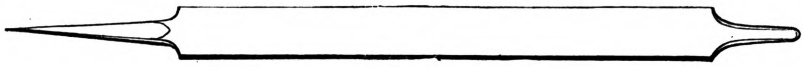

3653.

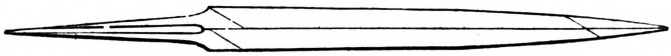

3654.

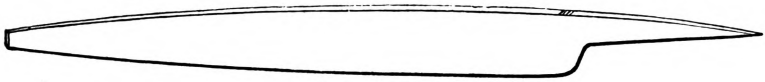

3655.

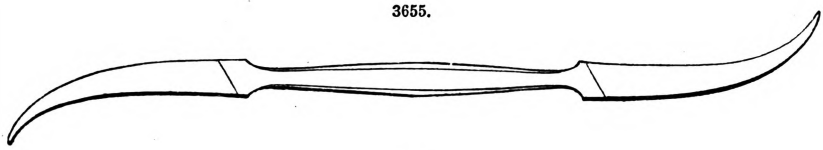

3656.

3658.

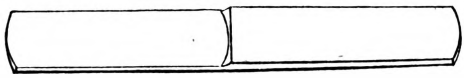

3659.

3657.

The effective power of the file resembles that of the saw, which has the power of a wedge not encumbered by the friction of one of the faces. The angle of the faces of the wedge is formed by the direction of the applied power and a tangent to the teeth. The diagonal position of the furrows of the file gives an additional shearing wedge power.

Chisels, Gouges, and Planes.—Fig. 3660 is of a shipwright's sharp iron chisel; Fig. 3661

3660.

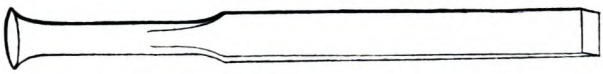

3661.

a ship slice; Fig. 3662 a turning chisel; Fig. 3663 a turning gouge; Fig. 3664 a bookbinder's plough knife; Fig. 3665 a common plane-iron; Fig. 3666 a round nose plane-iron; Fig. 3667 a cut plane-iron; Fig. 3668 a round nose double plane-iron; Fig. 3669 an ordinary double plane-iron;

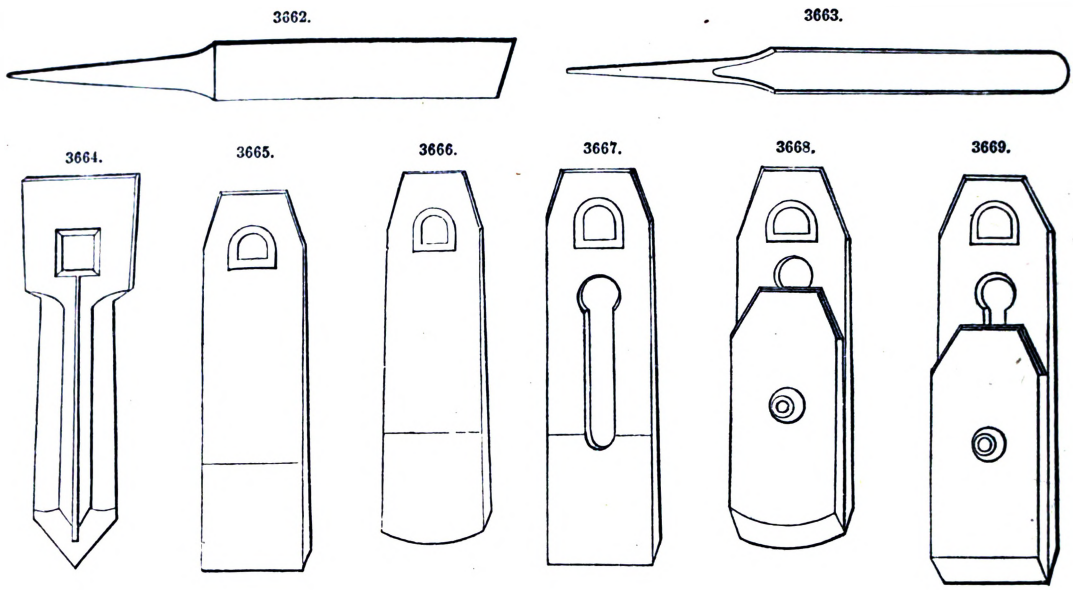

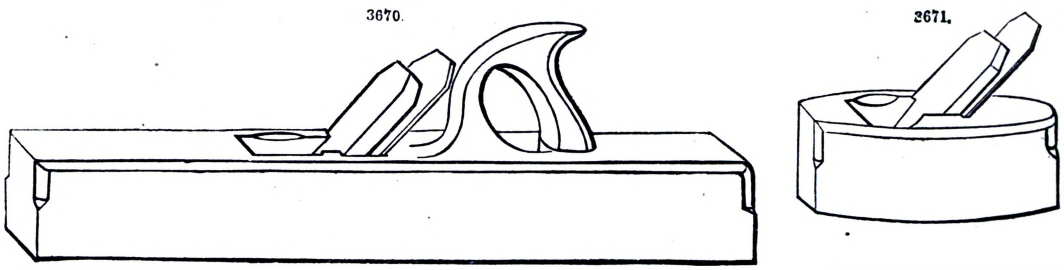

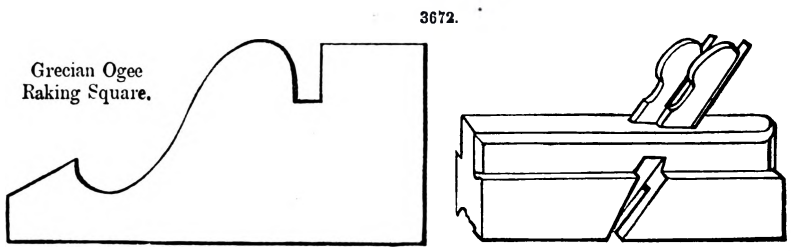

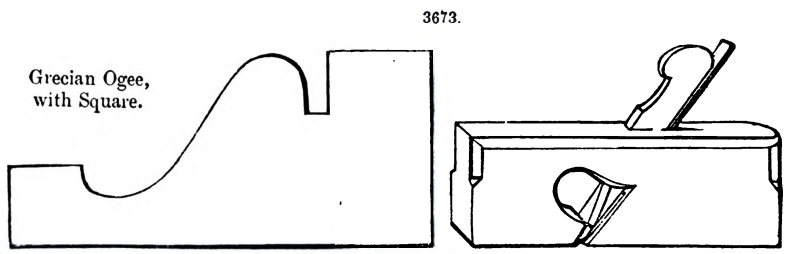

Fig. 3670 a trying plane; Fig. 3671 a smoothing plane, Fig. 3672 an ovolo sash plane, to stick and rebate; Fig. 3673 a rabbet or square plane with skew eye; Fig. 3674 grooving irons; Fig. 3675 a cooper's jointer iron; Fig. 3676 a coachmaker's T iron; Fig. 3677 a skew rabbet iron;

Fig. 3678 hollow and round rabbet irons; Fig. 3679 a striking knife; Fig. 3680 a carpenter's drawing knife; Fig 3681 a cooper's staff knife; Fig. 3682 a mast shave; Fig. 3683 a London

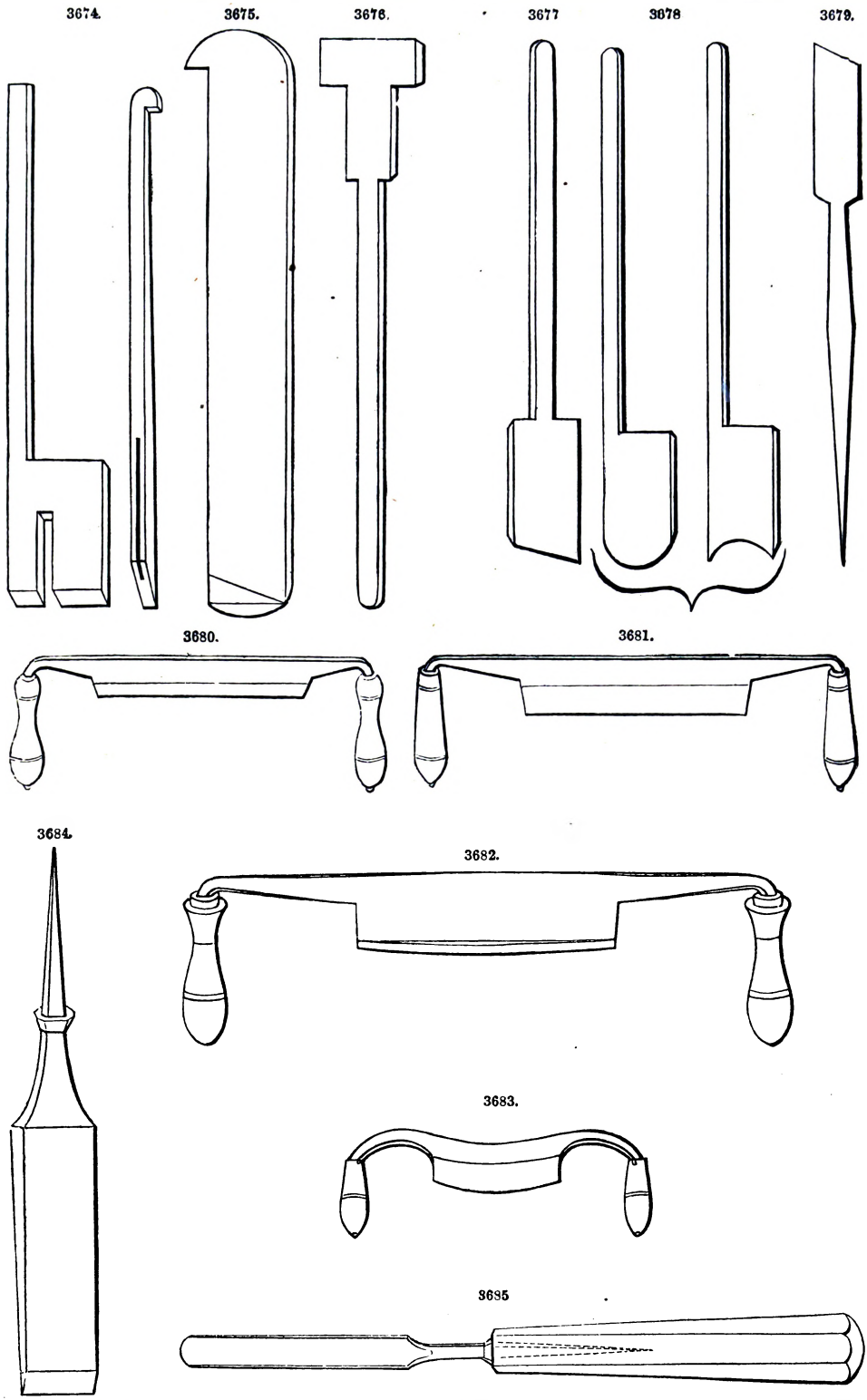

cooper's hollowing knife; Fig. 3684 a common chisel; and Fig. 3685 a common gouge, fixed to its handle.

Stocks, Dies, Bits, and Braces.—Figs. 3686 to 3697 show a double-handed screw stock, with four pairs of dies, and four each of taper and plug taps; Fig. 3698 a clock screw plate; Fig. 3699 a double-handed screw plate with taps; Fig. 3700 Whitworth's screw stock; Fig. 3701 an ordinary brace; Fig. 3702 a Scotch iron brace; Fig. 3703 a plated brace; Fig. 3704 a plug centre bit;

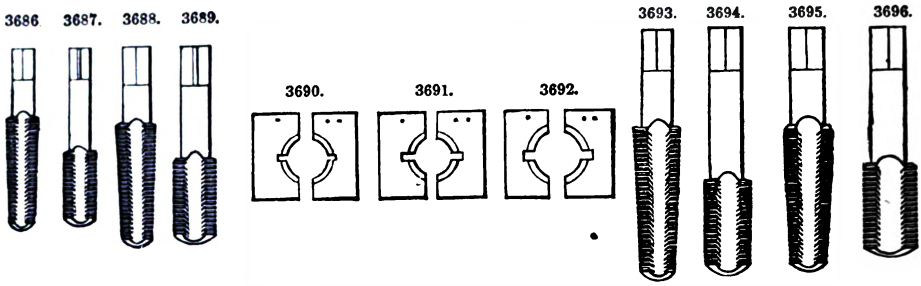

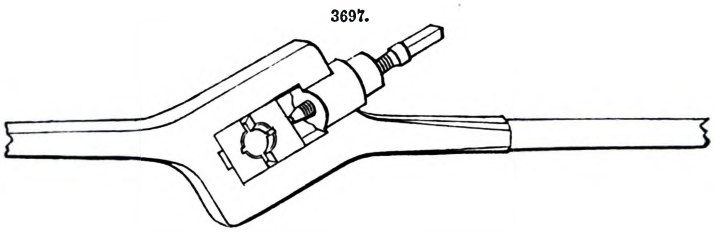

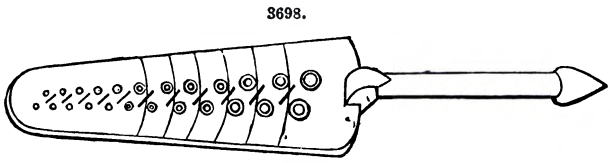

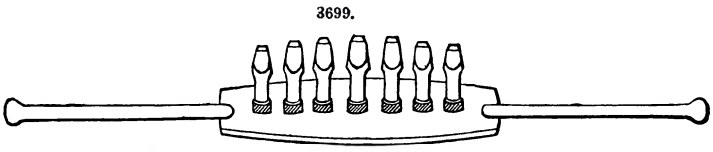

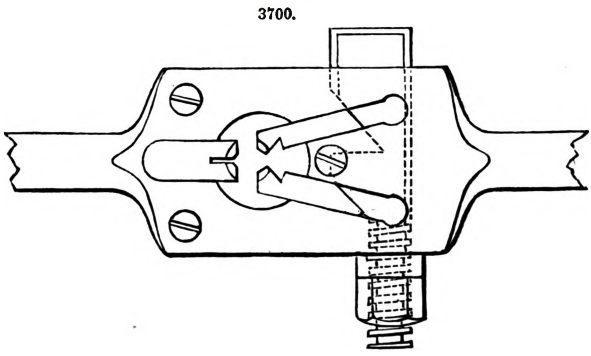

Fig. 3705 a snail horn countersink; Fig. 3706 a rose-head countersink; Fig. 3707 a flat-head countersink; Fig. 3708 a brace turnscrew; Fig. 3709 a bobbin bit; Fig. 3710 a taper bit; Fig. 3711 a sash bit; Fig. 3712 a shell bit; Fig. 3713 a nose bit; Fig. 3714 a spoon bit; Fig. 3715 a square rinder; Fig. 3716 a half-round rinder; Fig. 3717 a gimlet bit; Fig. 3718 a cooper's dowling bit; Fig. 3719 a universal ball ratchet brace; Fig. 3720 a self-feeding ratchet brace; Fig. 3721 a treble-motion ratchet brace; Fig. 3722 Calvert's ratchet brace;

3701.

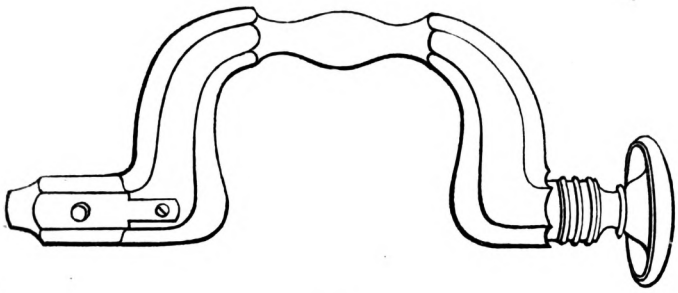

3702.

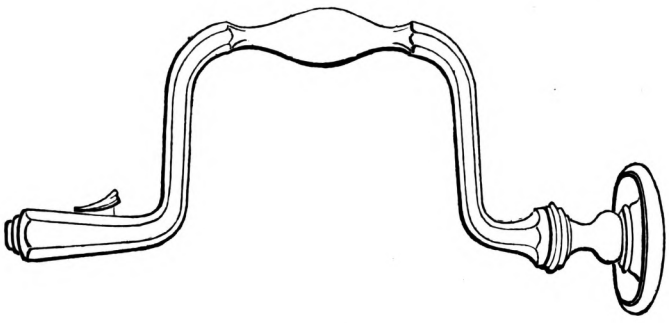

3703.

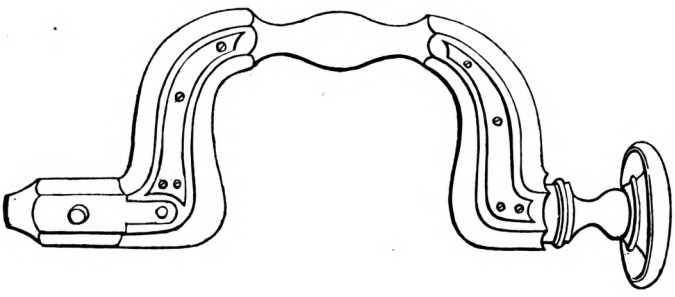

3719.

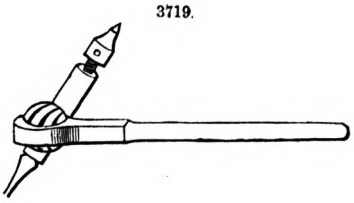

3720.

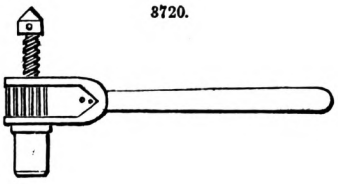

3721

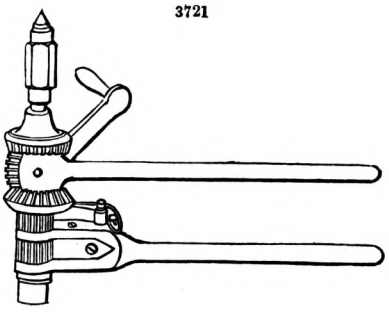

3722.

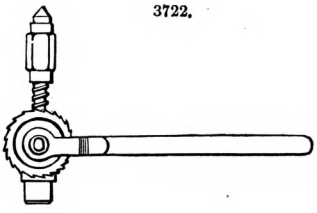

3704. 3705. 3706. 3707. 3708. 3709.

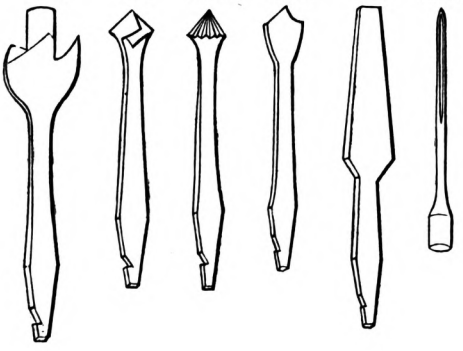

3710. 3711. 3712. 3713. 3714. 3715. 3716. 3717. 3718.

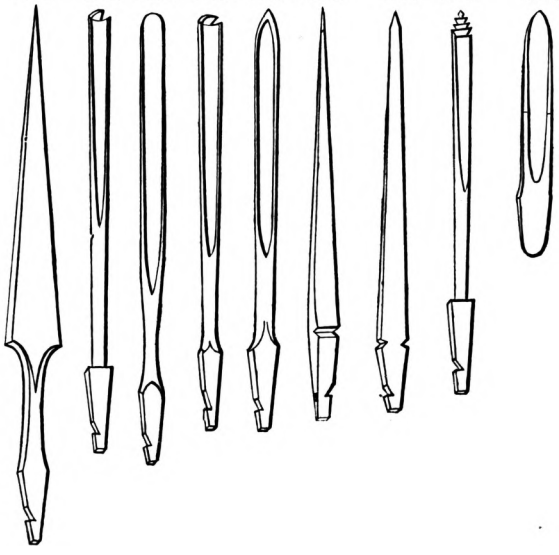

Figs. 3723 to 3725 are drill stocks of various kinds; Fig. 3726 a gas-pipe wrench for iron pipe, with three different sized claws; Fig. 3727 a gas-pipe tongs for iron pipe.

3723.

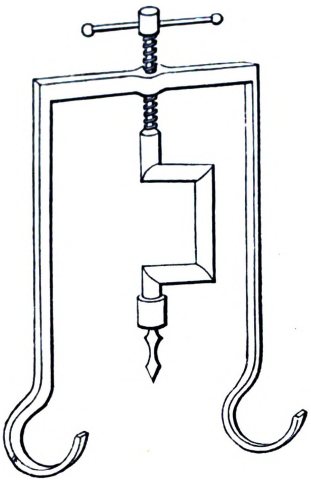

3724.

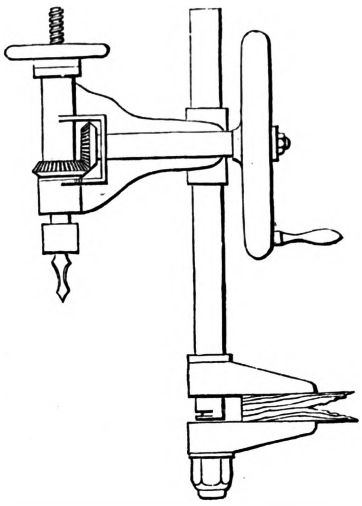

3725.

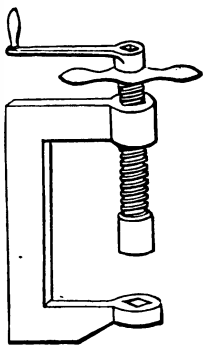

3726.

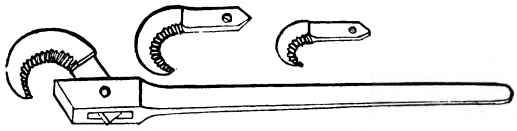

3727.

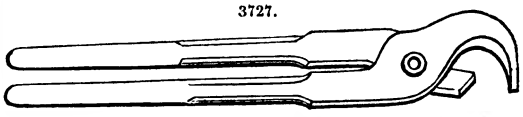

Plumbers' Tools.—Fig. 3728 is of a hornbeam dresser; Figs. 3729, 3730, bossing mallets; Figs. 3731, 3732, copper bits; Figs. 3733 to 3736 soldering and bossing irons; Fig. 3737 a ladle; Fig. 3738 a double sucker hook.

3728.

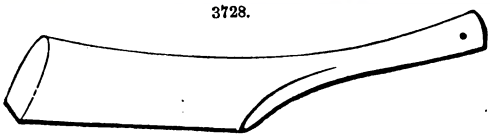

3729.

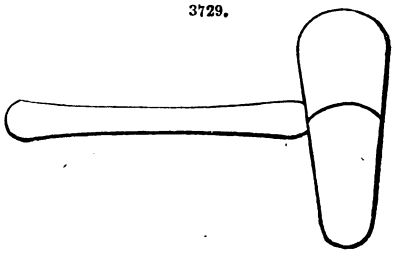

3730.

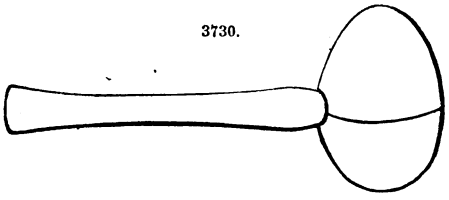

3731.

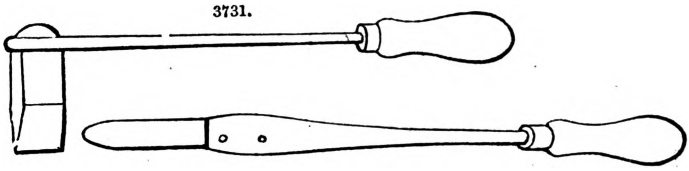

3732.

3733.

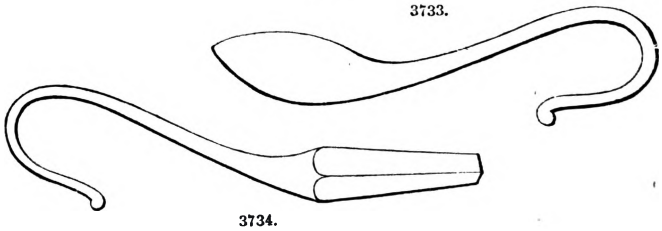

3734.

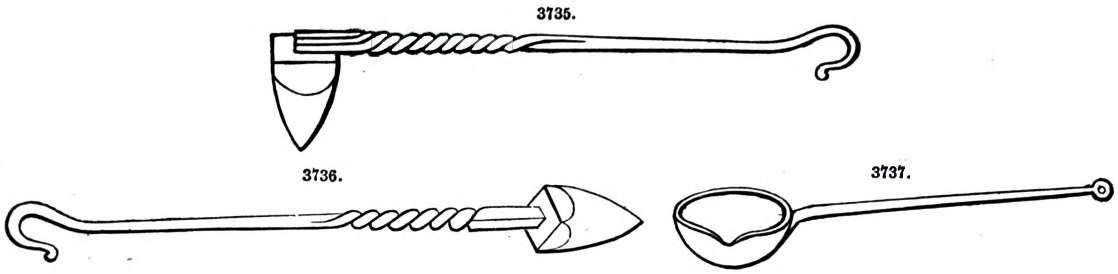

Print Cutters' and Carvers' Tools.—Fig. 3739 is a black carving chisel; Fig. 3740 a skew carving chisel; Fig. 3741 a flat black carving gouge; Fig. 3742 a medium black carving gouge; Fig. 3743 a black carving gouge for scribing; Fig. 3744 a deep black carving gouge; Fig. 3745 a black straight fluting gouge; Fig. 3746 a black bent fluting gouge;

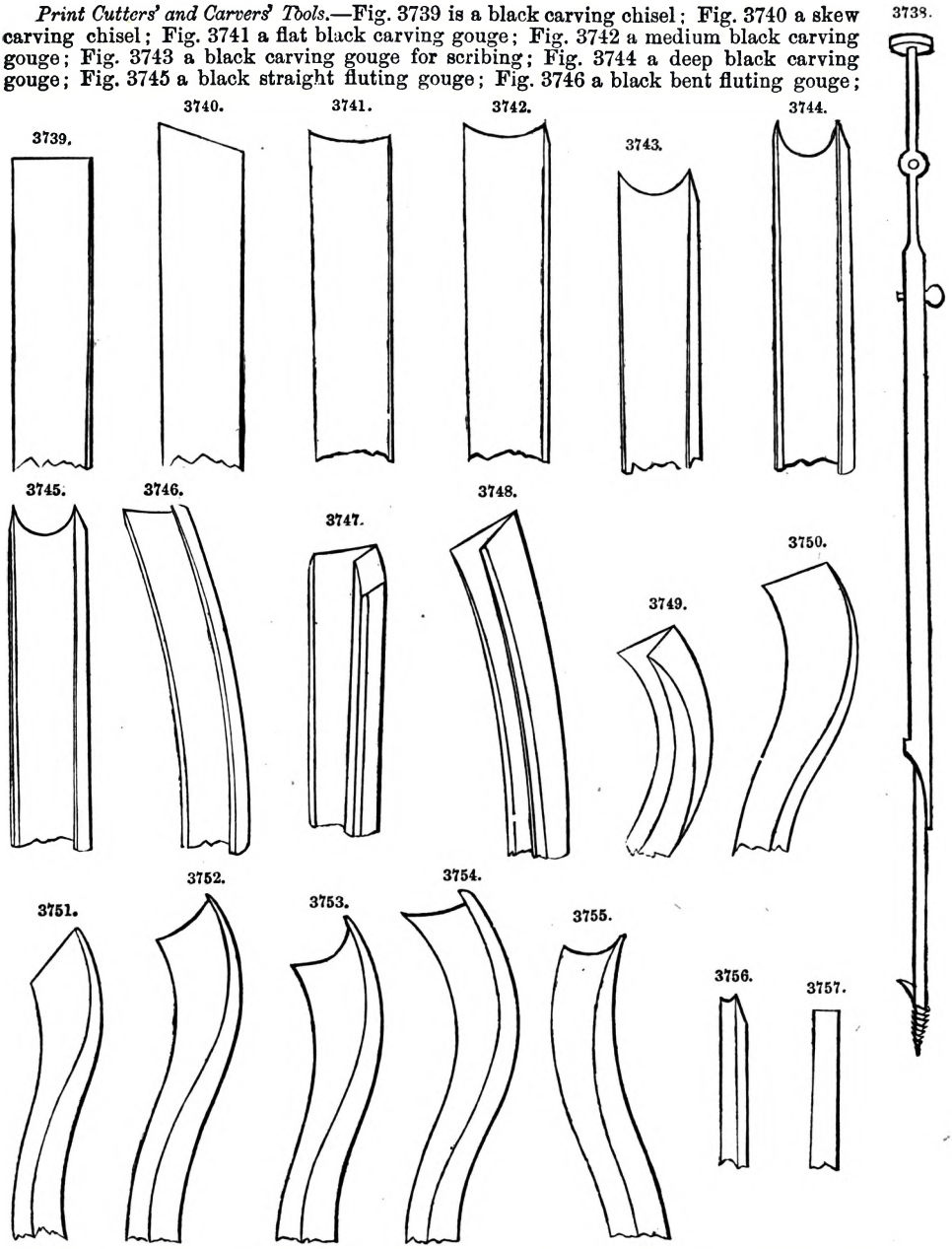

Fig. 3747 a straight parting tool; Fig. 3748 a bent parting tool; Fig. 3749 a spoonbit parting tool; Fig. 3750 a spoonbit or entering chisel; Fig. 3751 a skew spoonbit or entering chisel; Fig. 3752 a medium black carving gouge; Fig. 3753 a spoonbit or entering gouge for scribing; Fig. 3754 a deep spoonbit or entering gouge; Fig. 3755 a back bent spoonbit or entering gouge; Fig. 3756 a veining tool; and Fig. 3757 an unshouldered print cutter's chisel.

Tanners and Curriers' Hand-Tools.—Figs. 3758, 3759, tanners' knives; Fig. 3760 a currier's knife; Fig. 3761 an improved currier's knife with screws; Fig. 3762 a skinner's round moon knife; Fig. 3763 a saddler's knife; Fig. 3764 a ship scraper.

3758.

3759.

3760.

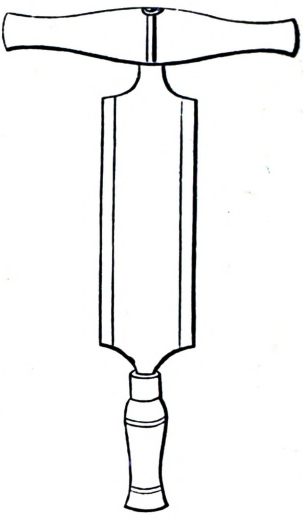

3761.

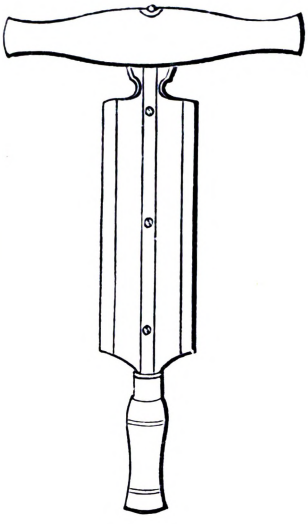

3762.

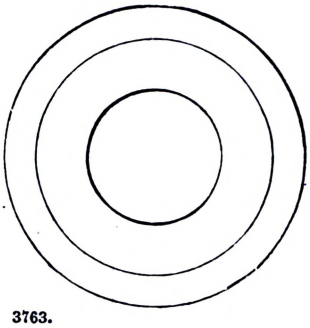

3763.

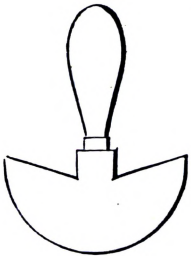

3764.

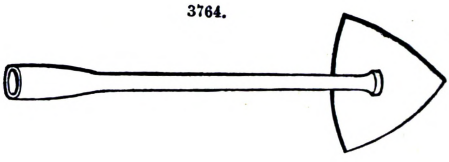

Miscellaneous Hand-Tools.—Fig. 3765 a boiler bear; Fig. 3766 a boiler cramp; Fig. 3767 an improved cramp for joiners, pattern makers, wheelwrights, or railway carriage builders; Fig. 3768

3768.

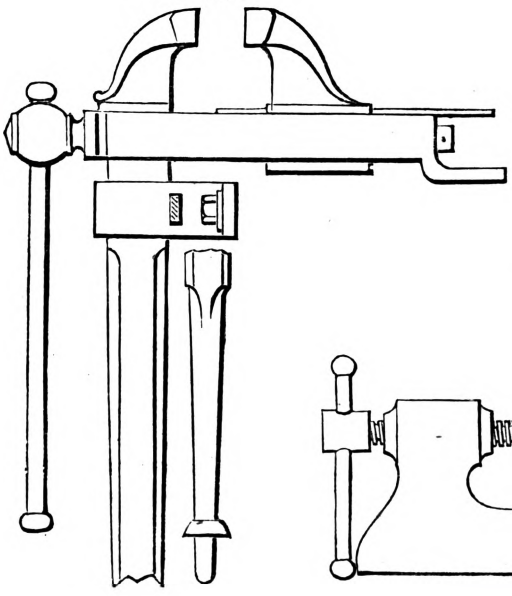

3765.

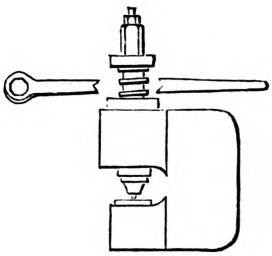

3766.

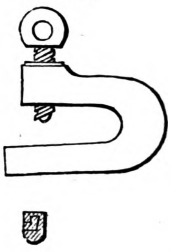

3767.

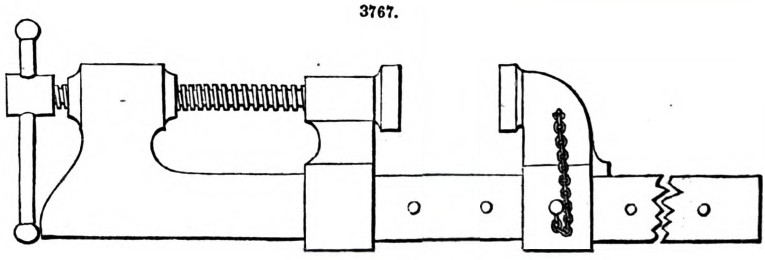

a wrought-iron parallel vice; Fig. 3769 an improved spanner; Fig. 3770 Fenn's spanner; Figs. 3771, 3772, screw-keys; Fig. 3773 a key spanner; Fig. 3774 Clyburn's spanner; Fig. 3775 Budding's

3769

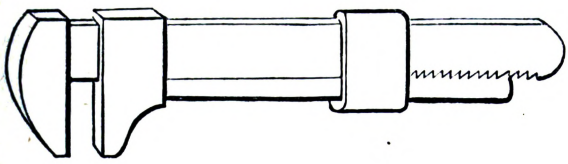

3770.

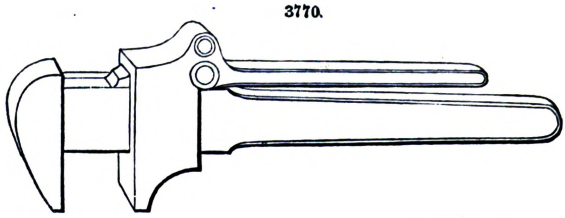

3771.

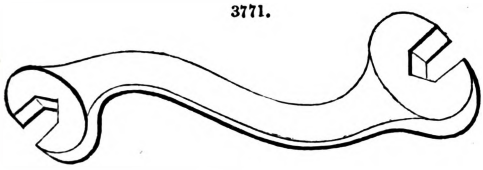

3772.

3773.

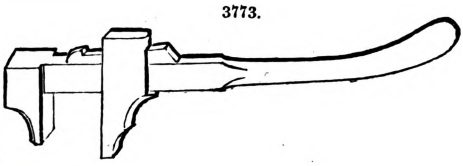

3774.

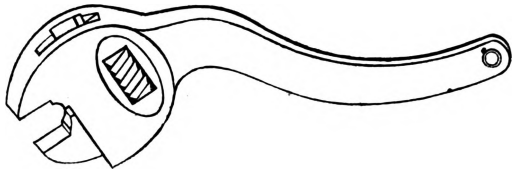

3775.

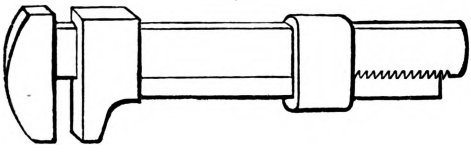

3776.

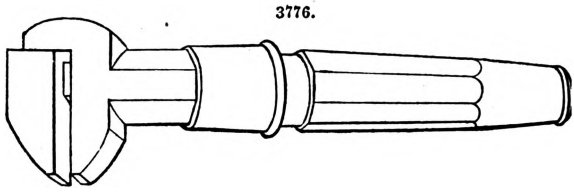

3777.

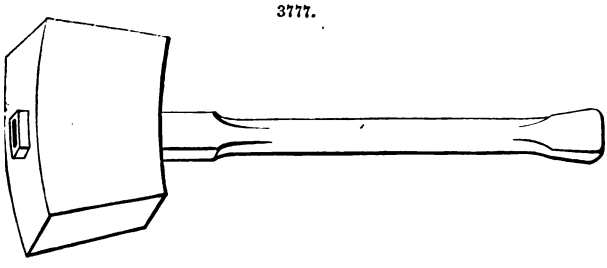

3778.

3779.

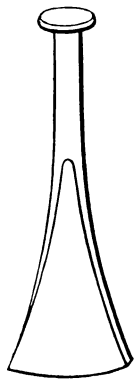

3780.

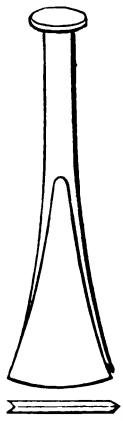

3781.

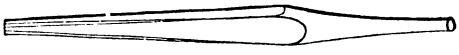

3782.

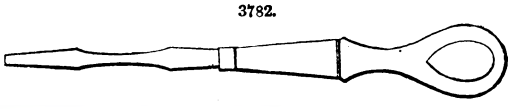

spanner; Fig. 3776 an improved cylinder wrench; Fig. 3777 a joiner's or carpenter's mallet; Figs. 3778 to 3780 calking irons; Fig. 3781 a brad or nail punch; Fig. 3782 a turnscrew, London

pattern; Fig. 3783 a spike gimlet; Fig. 3784 a wheeler's gimlet; Fig. 3785 a cutting gauge, the head faced with brass; Fig. 3786 an improved cutting gauge; Fig. 3787 a thumb or turnscrew

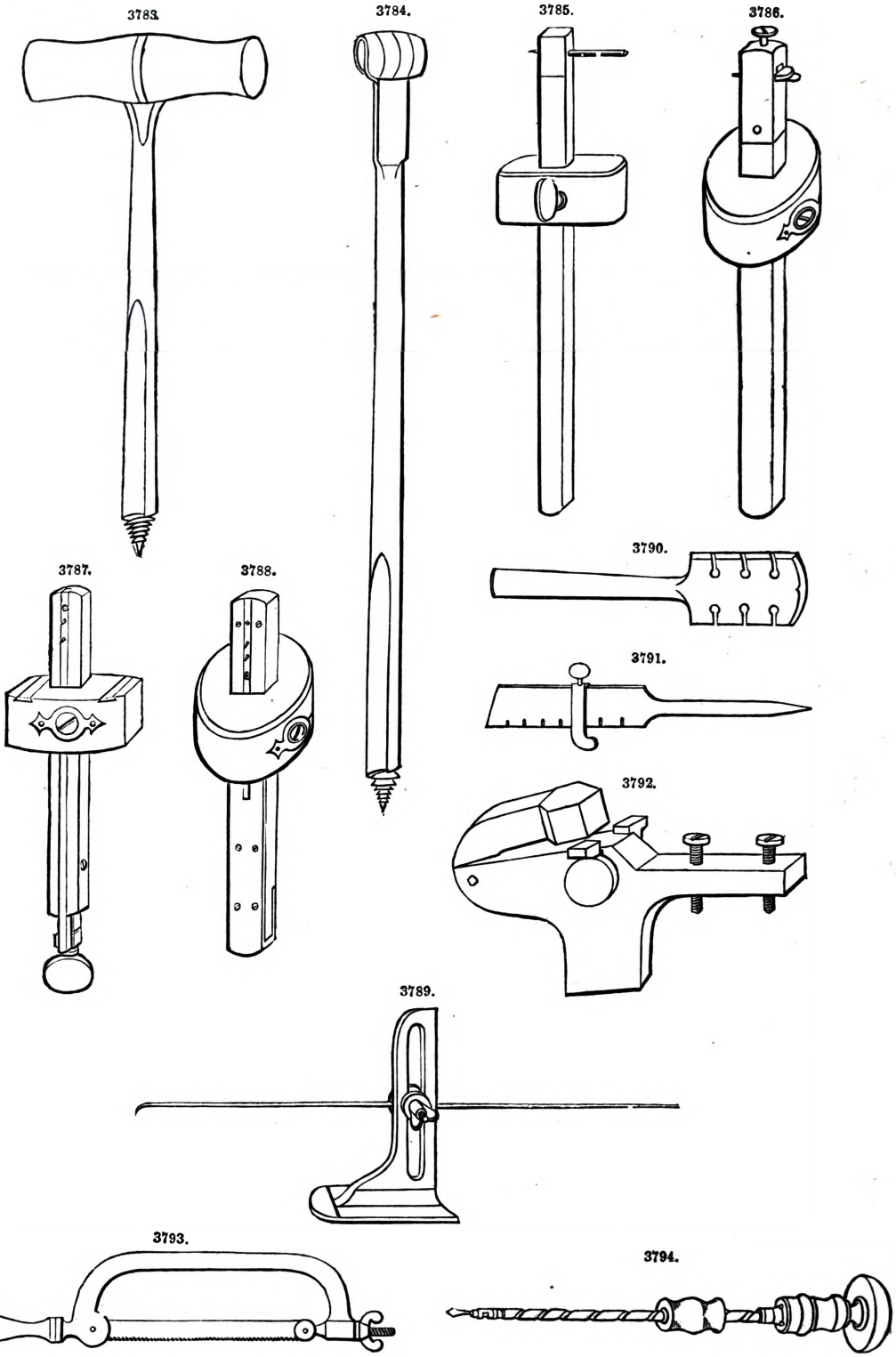

screw-slide mortise gauge; Fig. 3788 an improved mortise gauge with improved stem; Fig. 3789 a scribing block; Fig. 3790 a hand saw set; Fig. 3791 a slide saw set; Fig. 3792 an improved saw

set; Fig. 3793 an iron bow saw; Fig. 3794 is an Archimedian brace; Fig. 3795 a gas-pipe cutter for iron pipe; Fig. 3796 a lathe carrier; Fig. 3797 joiners' pincers; Fig. 3798 shoe nippers with

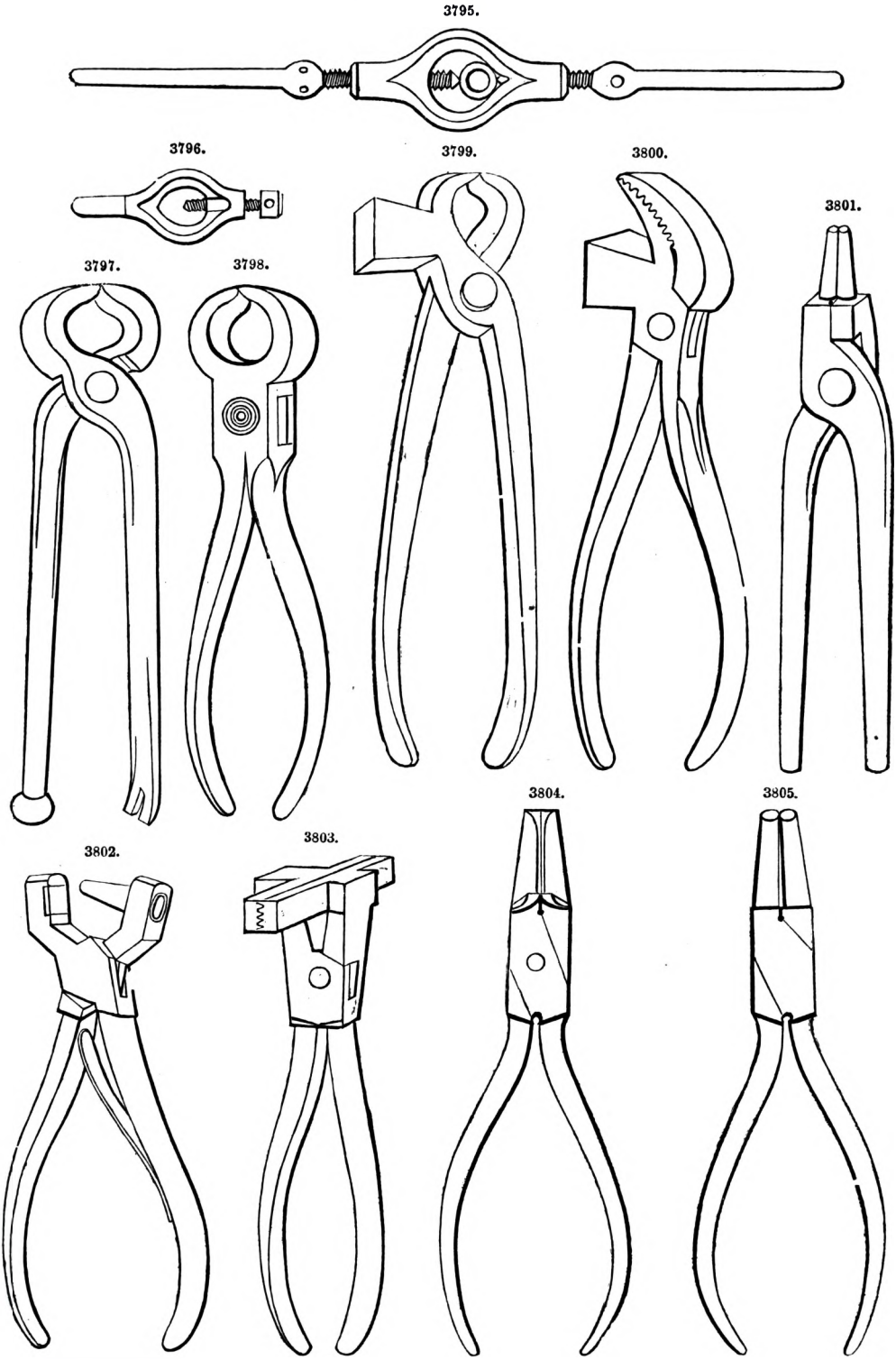

box joint; Fig. 3799 shoe nippers; Fig. 3800 shoe pincers; Fig. 3801 a tinman's pliers; Fig. 3802 shoe punch pliers; Fig. 3803 upholsterers' pincers; Fig. 3804 clock pliers; Fig. 3805 round-nosed

clock pliers; Fig. 3806 cutting nippers; Fig. 3807 nipper pliers; Fig. 3808 vice chop sliding tongs; Fig. 3809 sliding dog-nosed tongs; Fig. 3810 an improved saw set; Fig. 3811 a bent carpet strainer; Fig. 3812 a pinking iron; Fig. 3813 a box whirl drill stock.

Compasses and Callipers.—Fig. 3814 plain compasses; Fig. 3815 wing compasses; Fig. 3816 spring callipers; Fig. 3817 inside and outside callipers; Fig. 3818 improved inside and outside

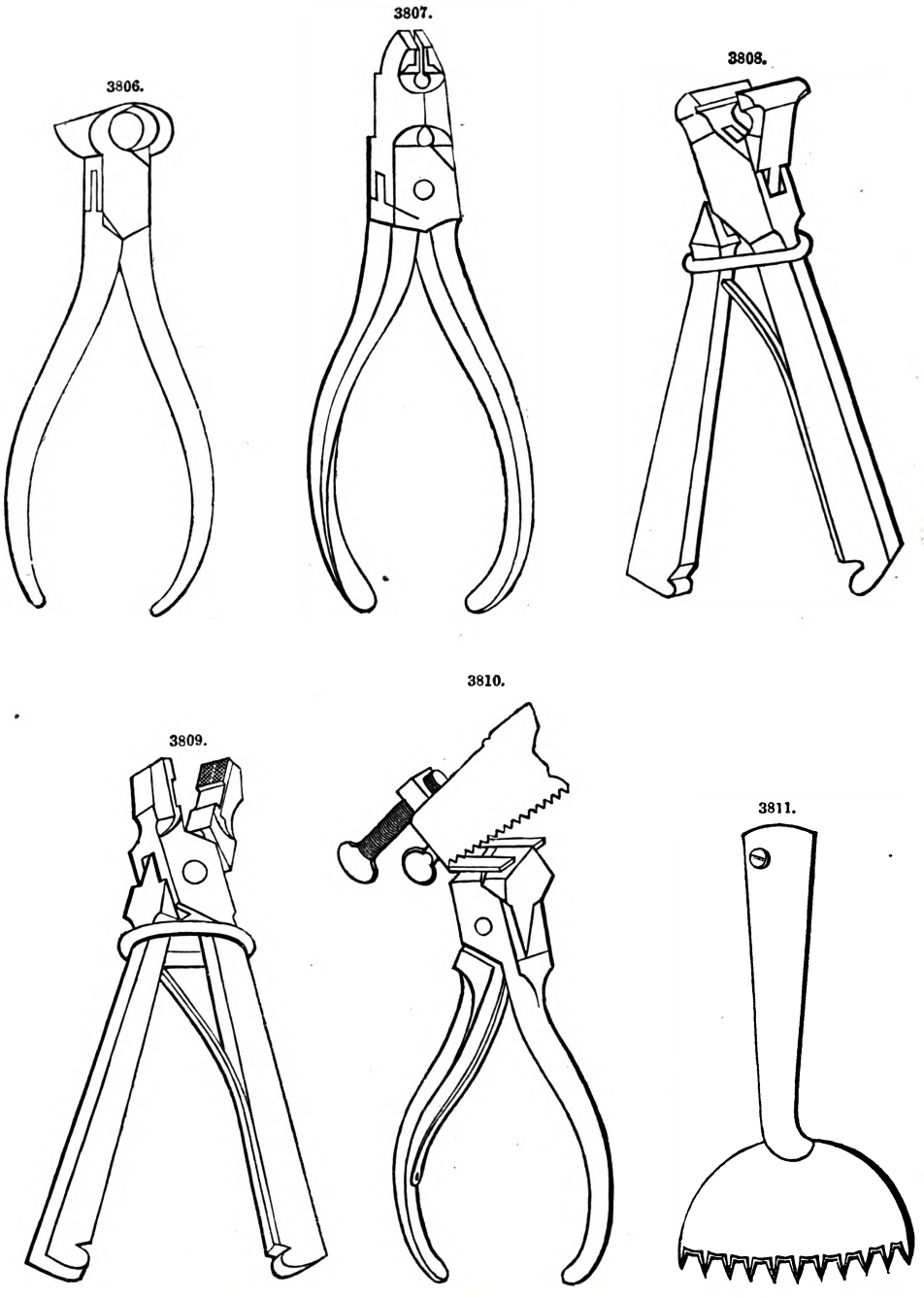

callipers; Fig. 3819 engineers' beam dividers; Fig. 3820 is a decimal *cam* gauge. The eccentricity of a movable cam which is finely graduated shows the diameter of any small body which is held between a circular movable pin and the edge of the cam. The index always points to the centre of the circular pin or stud, and shows the normal distance between the surface of that stud and the surface of the cam. See COMPASSES.

3812

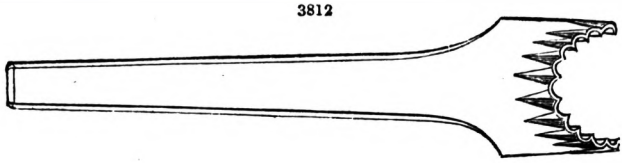

3813.

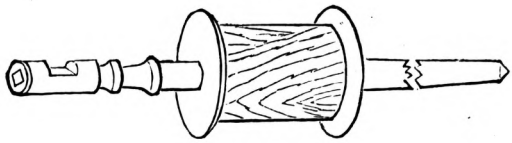

3814.

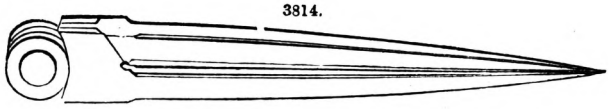

3815.

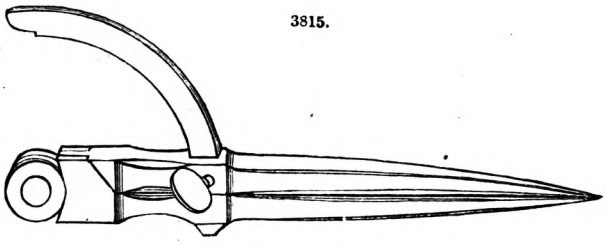

3816.

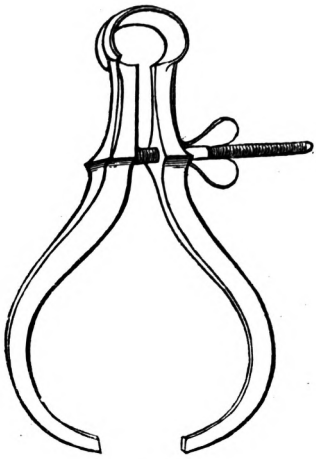

3817.

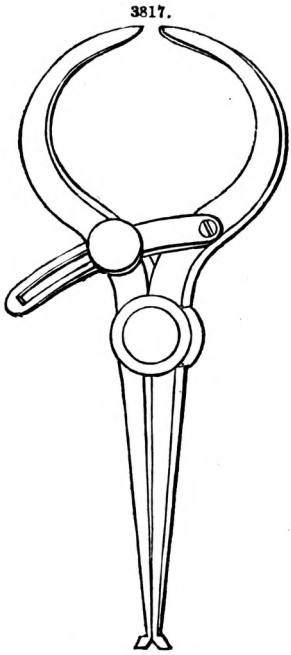

3818.

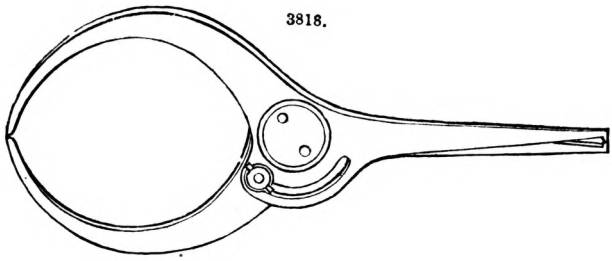

3819.

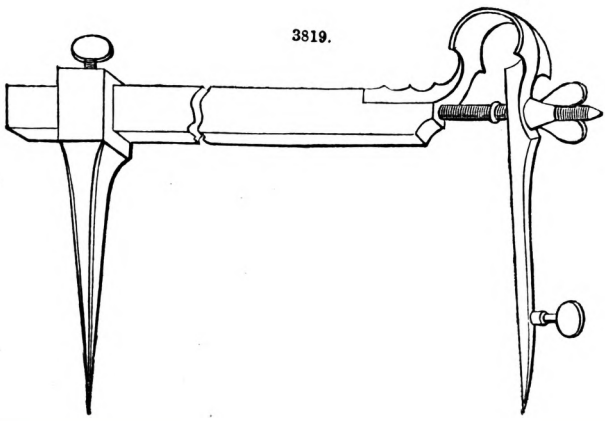

3820.

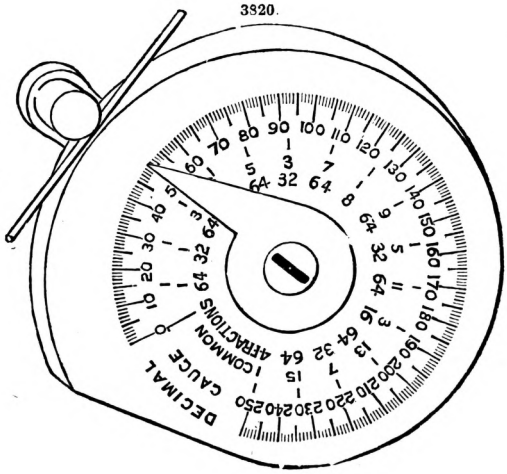

Trowels.—Fig. 3821 is of a mason's trowel; Fig. 3822 a London brick trowel; Fig. 3823 a pointer's cutting trowel · Fig. 3824 plasterers' trowels; Figs. 3825, 3826, plasterers' moulding tools.

3821.

3822.

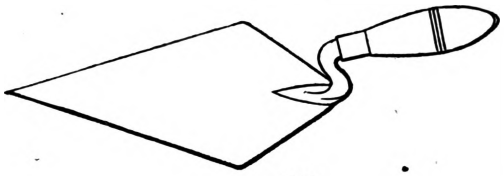

3823.

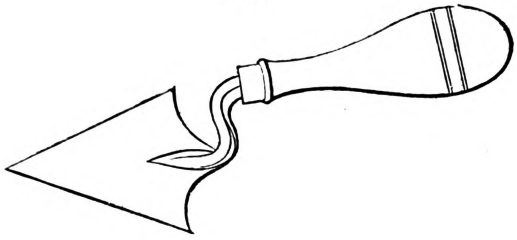

3824.

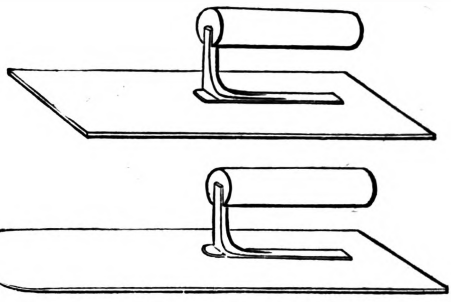

3825.

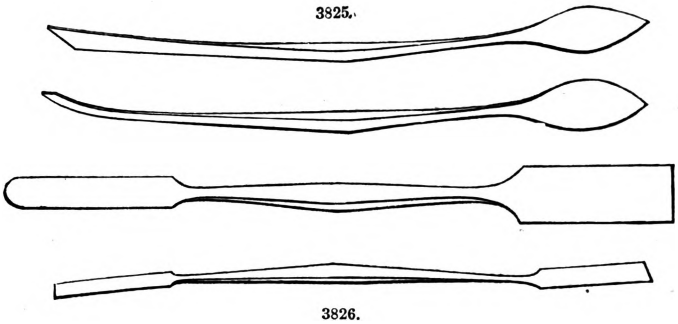

3826.

Sickles, or *Reaping Hooks.*—Fig. 3827 is of the form of reaping hook used in Yorkshire and the North of England; Fig. 3828 a Welsh hook; Fig. 3829 a Kent hook; Fig. 3830 an English

3827.

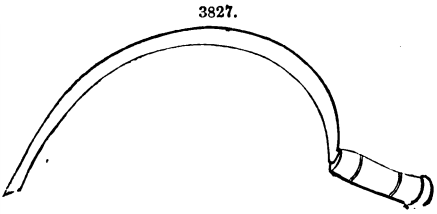

3828.

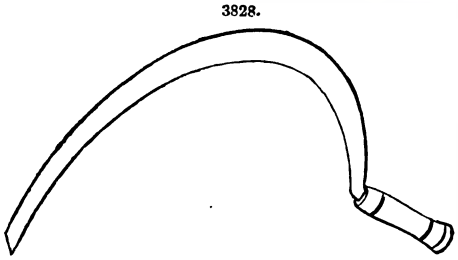

3829.

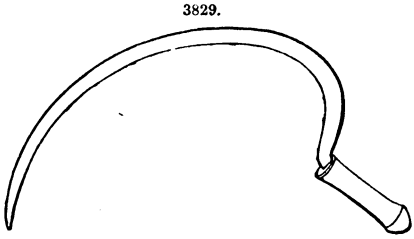

3830.

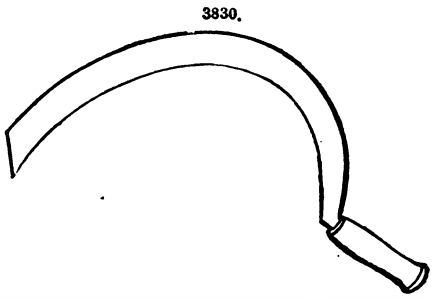

bagging hook; Fig. 3831 an Irish sickle with square heel; Fig. 3832 a bean hook; Fig. 3833 a pea hook; Fig. 3834 a United States' Yarrick sickle; Fig. 3835 a Russian sickle; Fig. 3836 a Spanish sickle; Fig. 3837 a German sickle; Fig. 3838 a Poland sickle. The sickle has the power of the cam and saw combined; it acts on a small sheaf or bundle of grain collected by the left hand and the bay near the handle of the instrument; the small sharp teeth which point to the reaper

3831.

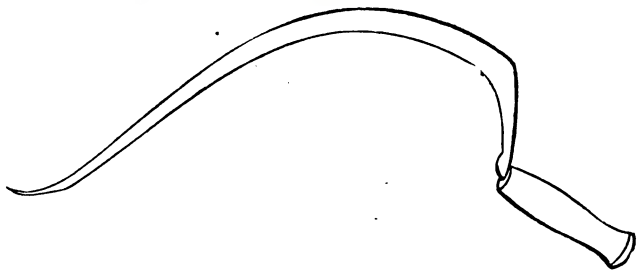

3832.

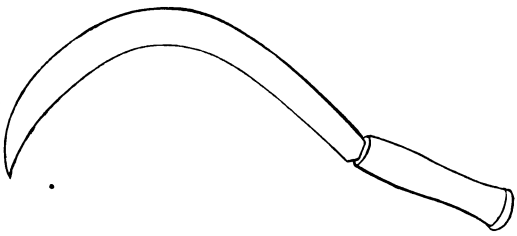

3833.

3834.

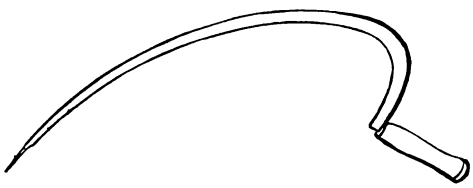

3835.

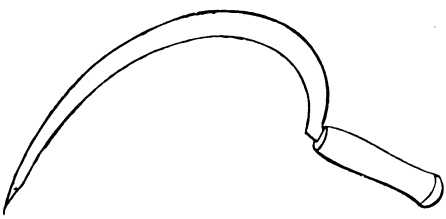

3836.

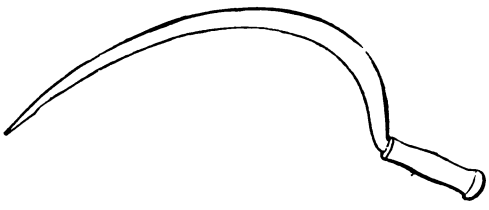

3837.

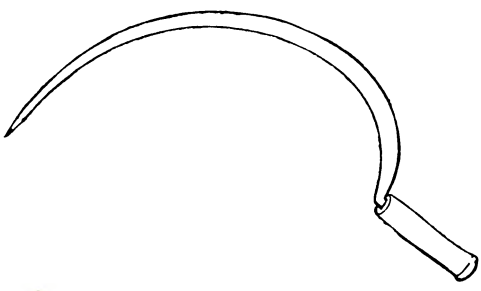

3838.

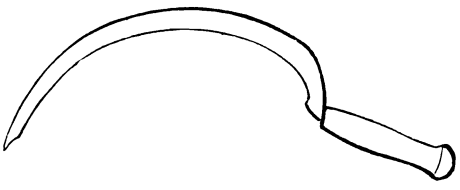

3839.

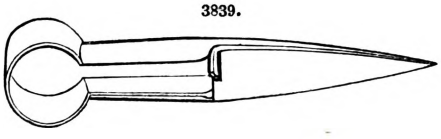

3840.

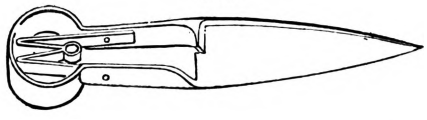

do not retard the process of gathering the grain. The reaper with his right hand draws the sickle towards him and brings the hollow toothed-cam into contact with the stalks, which he cuts, or rather saws, with great ease on account of the shape of the instrument and his own physical formation. Fig. 3839 is of an ordinary sheep-shears; Fig. 3840 an improved sheep-shears. See AGRICULTURAL IMPLEMENTS.

Spades, Shovels, and Scoops.—Fig. 3841 a gravel shovel with long strap; Fig. 3842 a tender or locomotive shovel; Fig. 3843 an imperial Scotch spade; Fig. 3844 a soughing spade; Fig. 3845 a soughing tool; Fig. 3846 a long-handled Irish spade; Fig. 3847 a deep draining tool; Fig. 3848 a mud shovel; Fig. 3849 a bottoming spade; Fig. 3850 a flat scoop; Fig. 3851 a draining hoe Fig 3852 is of a pick-axe; Fig 3853 is of an ordinary hoe.

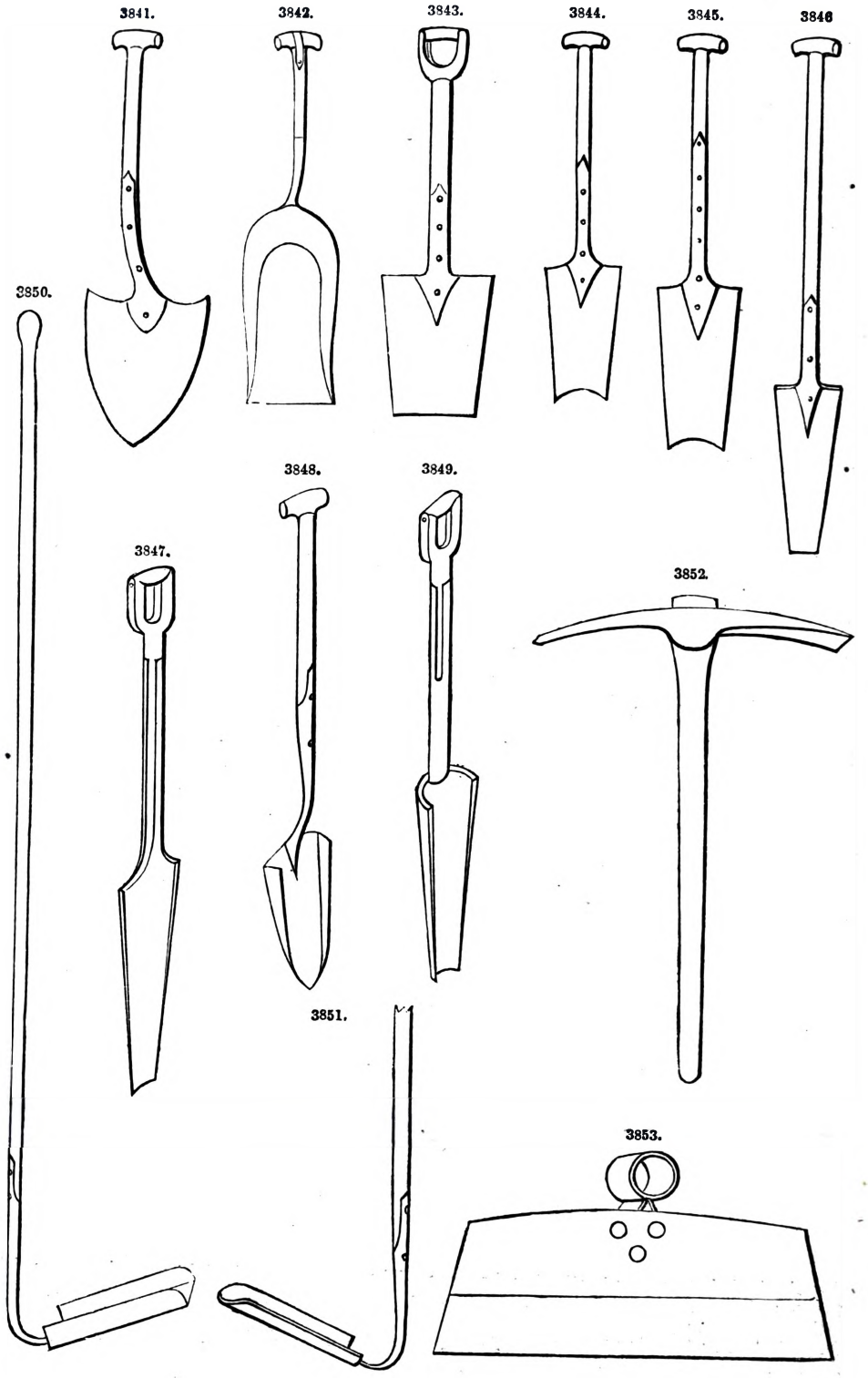

Fig. 3854 is of a lifting or hoisting crab; Fig. 3855 an improved traversing jack; Fig. 3856 Haley's screw-jack; Fig. 3857 a tripod jack.

We have represented with geometrical accuracy hand-tools of great durability, formed to effect the objects for which they are designed with ease, accuracy, and precision. Most of our illustrations are of tools manufactured by Alexander Mathieson and Son, of Glasgow, who, as tool-makers, stand first in the first class. This firm have reduced the hardening and tempering of hand-tools to

3854.

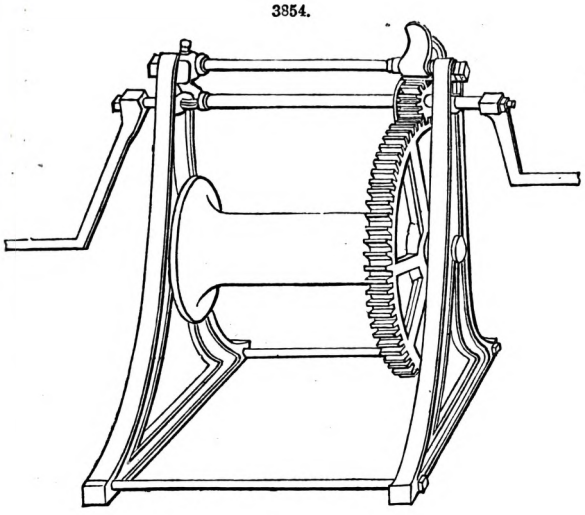

3856.

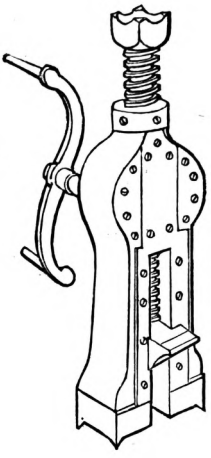

3857.

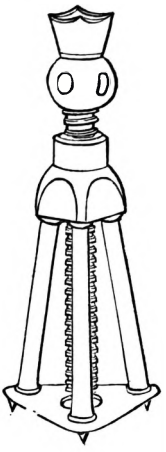

3855.

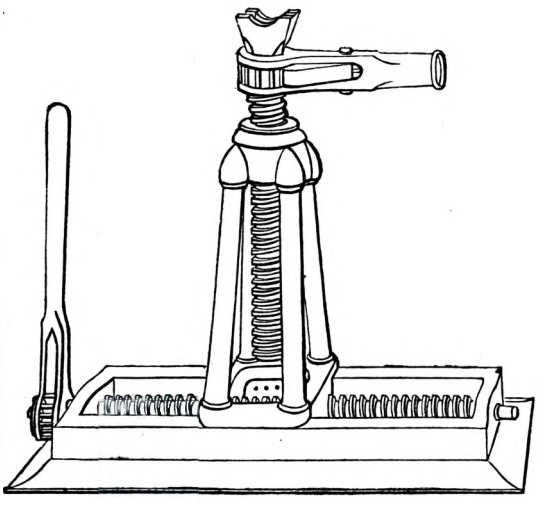

3858.

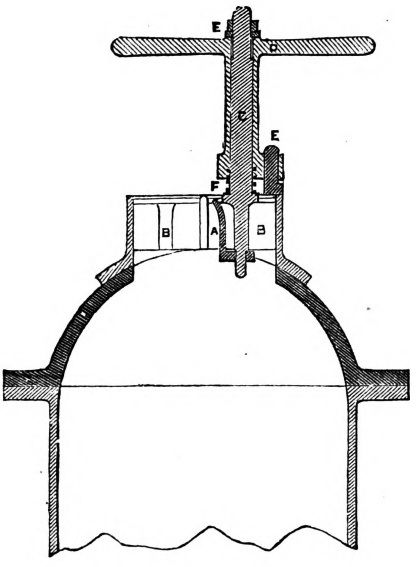

a science, which can only be acquired by much thought and an extensive experience; their planes and boring tools, in particular, have acquired a well-deserved and extensive fame. There are many points of excellence in the larger tools manufactured by Mathieson and Son to which we shall hereafter refer in our article MACHINE TOOLS.

3859.

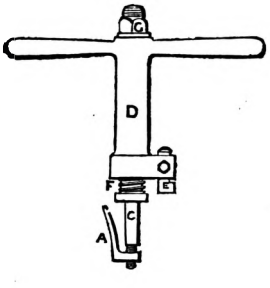

3860.

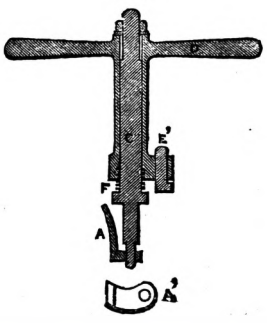

Knifing Machine, Figs. 3858 to 3860, invented by J. F. Stephenson. This design is new, and possesses many advantages over the mode generally in use, namely, chucking on the lathe. One man is able to set this tool, Fig. 3858, and face two valve-seats in about an hour, and without breaking the dome-cover joint. Fig. 3858 is a cross-section of a dome cover, with the tool in position for working. Fig. 3859 is an elevation of the tool itself. Fig. 3860 is a section, showing the knife for cutting the mitre. A', Fig. 3859, is a plan of nut A. The action is easily explained:

thus, referring to Fig. 3858, hold the nut A by the stalk and pass it under the bridge of the valve-seat B; screw the pillar C into the nut A, then place the box handle D, which carries the cutter E, which is bored out to receive the spring F, on to C. Screw the nut G, Fig. 3859, to supply the feed to E, then the tool is in perfect order for facing the top of the valve-seat; when that is completed, change the cutter E, and insert another cutter E', as shown in Figs. 3858 to 3860, to give the proper mitre for the valve to rest upon. This tool is valuable in railway establishments, as safety-valve seats frequently require facing.

Fig. 3861 is of a hand-power bench drilling machine, by Muir and Co., of Manchester, capable of drilling holes ¾ in. diameter, 3 in. deep, in wrought or cast-iron and steel, up to 1 ft. diameter by hand-power, consisting of independent framing, securely bolted to the foundation, which serves as a table for articles to rest upon while under operation. This hand-tool has a cast-steel spindle, with parallel bearings, and feed-motion attached; it is worked by a square-thread screw and hand-wheel at the top of the machine. It is furnished with a large fly-wheel, adjustable handle, and wood ferrule. It has a driving shaft and bevel-gearing for the spindle, and chucks for holding the drills and nut-keys. See AGRICULTURAL IMPLEMENTS. ALLOYS. ANVIL. ARTESIAN WELL. AUGER, p. 203. AWL. BARROW. BATEA. BELLOWS. BENCH. BLAST FURNACE. BORING AND BLASTING. CONSTRUCTION, p. 1034. CROWBAR. ELECTRO-METALLURGY. FORGE. GRINDSTONE. MACHINE TOOLS.

3861.

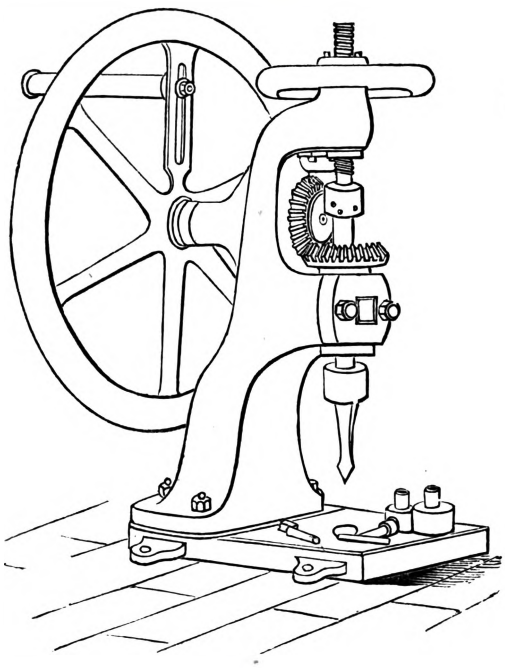

3862.

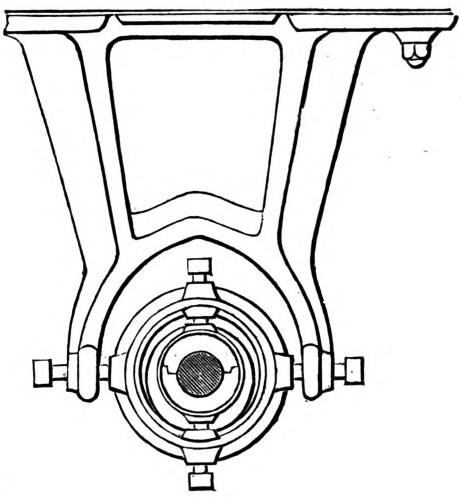

HANGER. FR., *Palier pendant;* GER., *Hängelager;* ITAL., *Sostegno sospeso;* SP., *Soporte suspendido.* When hangers with long bearings were first introduced, the attempt was made to use long boxes for line and countershaft journals, as well as for all others, but the warping and shrinkage of the girders and ceiling joints to which hangers are almost invariably secured soon threw the boxes out of line, and had a tendency to bind the shafting, and left no alternative but to return to the short box, unless some device could be found whereby the box would be free to adjust itself to the shaft regardless of the position of the body of the hanger. Among a variety of contrivances designed to accomplish the above object an application of the universal-joint arrangement was considered the best, as it is one of the cheapest, of all that possess the necessary requirements.

The manner of applying the principle to line-shaft hangers is shown in Fig. 3862. The box, being secured within the ring and between the two arms of the hanger by the four set screws, is free to turn in any direction, and the clearance between the different parts admits of its being moved sideways, or up and down, so as to bring the shaft into exact line when the bodies of the different hangers are nearly in the required position. A section of box, ring, and drip-cap is shown at Fig. 3863, which may be used as shown in Fig. 3862, or in a bracket of the form shown at Fig. 3864, or in a plummer-block, Fig. 3865.

At Figs. 3866, 3867, a countershaft hanger is shown in which the same self-adjusting device is employed, but as only two set screws instead of four are used, the boxes are not adjustable. When these hangers are in use it has been the practice to make the journals from 3½ to 4 diameters in length, to chamber out the boxes, and line them with anti-friction metal.

At Figs. 3868, 3869, a self-lubricating journal-box, applicable to the same hanger, is shown, in which it is proposed to return the oil from the drip-cup to the shaft by means of the two loose rings, A A.

Figs. 3870, 3871, show a line-shaft coupling, which, with the exception that the cones are liable to stick fast, may well be pronounced faultless. This method was first introduced by

C. F. T. Young. A device, whereby it is proposed to overcome this one difficulty, is shown in Fig. 3870, and consists simply in having a tapped hole through the shell of the coupling, into which a conical-pointed set screw may be inserted for forcing the cones out of their seat.

3863.

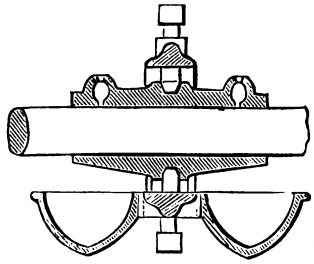

3868.

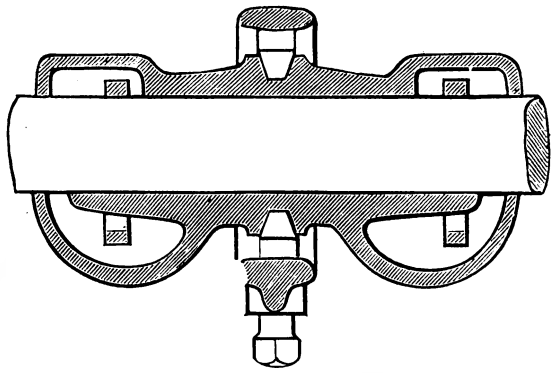

3864.

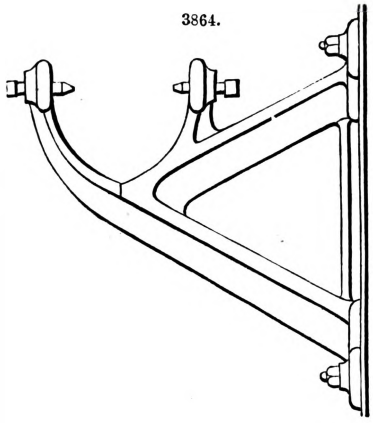

3869.

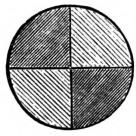

3870.

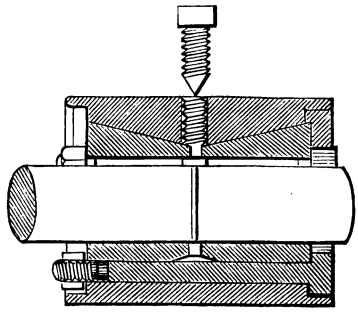

3865.

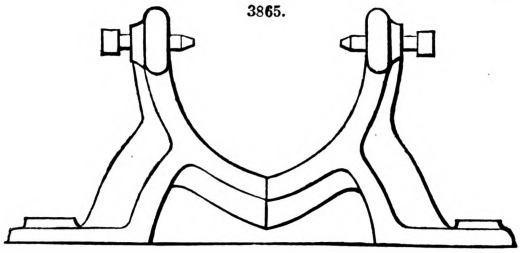

3871.

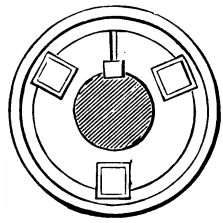

3866.

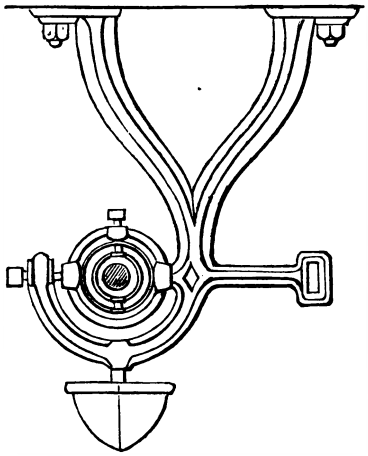

3867.

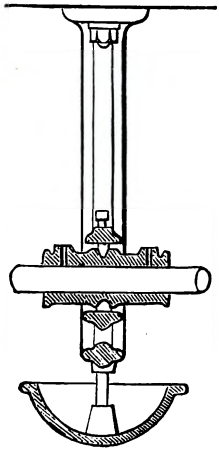

3872.

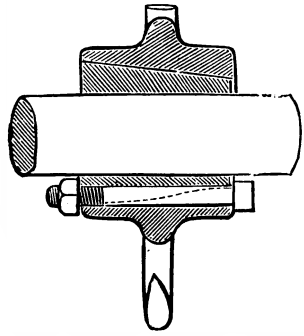

Fig. 3872 is of a method of securing pulleys to shafting by means of a split cone and one or more bolts. The advantages of this arrangement are, that the pulleys can be set at any point in

the shaft without disfiguring it with key-ways or set-screw marks, that they will run true when set, and that they can be changed to different sized shafts by simply changing the cones.

C. F. T. Young gives credit to A. Shanks as the original inventor of the system of hangers illustrated in Figs. 3873, 3874. The hanger employed by Shanks in 1848 is shown in Figs. 3873, 3874; *a* is the hanger; *b* is the portion carrying the bearing for the shaft; *c*, the bearing; *d d*, the

3873.

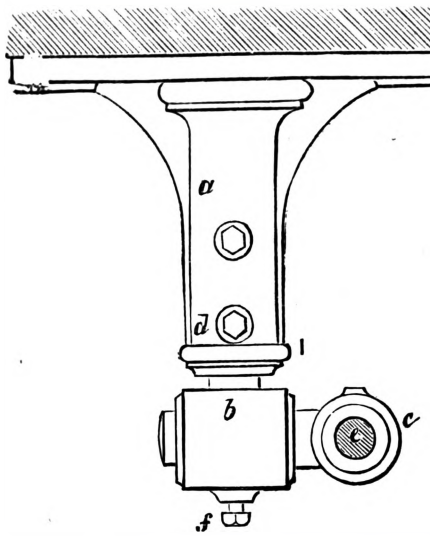

3874.

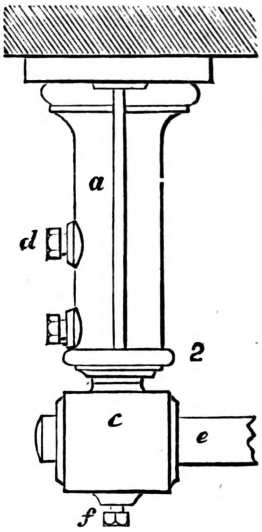

set screws by which the line of the shaft can be readily adjusted; *e*, end of the shaft; and *f*, the set scre by which the horizontal position of the shaft and bearings is adjusted. By this means vertical, horizontal, and all other motions are attained, and the shaft thereby easily set and maintained in its proper position with very little trouble.

HARBOUR. Fr., *Port;* Ger., *Porten;* Ital., *Porto;* Span., *Puerto.*

The Albert Harbour at Greenock.—The following account of this harbour is taken from the Minutes of P. I. C. E., 1863. The minute to which we allude is No. 1082, entitled "Structures in the Sea, without Coffer-dams," by Daniel Miller.

In bringing forward this paper the engineering objects D. Miller had in view were to treat of the various methods of constructing the foundations of quay-walls, piers, or breakwaters, for the formation of docks and harbours in deep water; to describe works of this kind carried out on principles different from those usually practised; and to point out the further application of these principles to other works of a similar nature.

The formation of these works has usually required the adoption of very expensive means; and an easy and economical mode of building such structures, so as to combine the various conditions necessary to ensure solidity and capability of resisting the mechanical forces to which they are subjected, and also the destructive action of exposure to the elements, the boring of marine worms, or the corrosive action of salt water, has been hitherto a desideratum.

Several methods of founding works in deep water have been practised; but there are objections to most of these systems, arising either from their expensive nature or from defects in the durability of the structures. The plans which have been employed are;—

Founding on piling carried up to about the level of low water;
Constructing within caissons or coffer-dams; and
Building under water by means of diving apparatus.

The first method has serious defects, both in deficiency of strength and of durability, as the piling is often insufficient to resist the lateral pressure from behind the wall, and the heads of the piles being exposed to the alternate action of air and water soon decay, when the weight of the wall above rapidly completes the failure of the whole structure. Where there are marine worms this mode is quite inapplicable. Instances of the failure of such works will occur to many. Referring to the Clyde River, for example, nearly all the older quay-walls of the harbour of Glasgow were built on this principle, and have given way from the decay of the piles, or have required very expensive repairs to keep them up; and at Port Glasgow Docks the walls, which were also built on that system, gave way from the lateral pressure forcing them out shortly after completion, greatly to the injury of that port.

The most usual mode adopted, where works of great solidity are required, is to resort to coffer-dams and to pump out the water from the enclosed space, so that the foundations and the walls may be constructed as on dry land. This is certainly most effectual, but it is at the same time generally expensive, and it is often not unattended with danger. In many cases, too, from the nature of the strata, it is almost impossible to form an effective coffer-dam. The construction of coffer-dams, moreover, frequently requires much engineering skill, besides involving great expense; and when it is considered that they are only wanted for a temporary purpose, it must be conceded that it is an object of great importance to devise some mode by which their use can be obviated, and solid and durable works can be executed without their aid.

The system of building under water by means of *diving bells* and *diving dresses* has been practised to a considerable extent, and the improved apparatus now used gives great facilities for this kind of work; but it is only applicable under particular circumstances, and it is also costly, besides being liable to cause delay in the progress of the work. The Dover Breakwater, Fig. 3875, is an example on a large scale of this mode of construction, but it is also an instance of the vast sums which may be expended on this system.

3875.

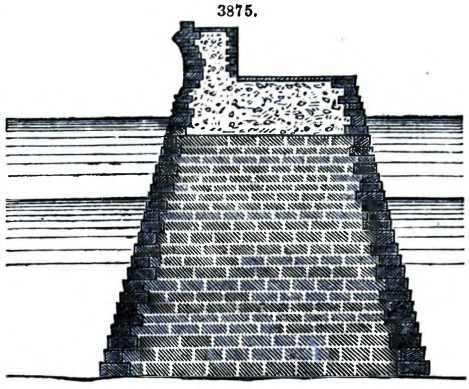

In *bridge* building a great innovation has been made in the construction of the piers without the aid of coffer-dams, and the French engineers have been, until lately, in advance of this mode of constructing such works. The plan they pursue was introduced by Vicat in 1813; it consists in forming enclosures of close piling, or "caisses sans fonds," of the shape of the pier, up to about low-water level, and filling in with hydraulic concrete, or béton, on which the upper part of the piers is built in the usual manner. Some important bridges in France, and many of those across the Seine at and near Paris, such as the Carrousel, Jena, Austerlitz, Alma, and Asnières, have the piers formed in this way without coffer-dams. These works of the French engineers, however, being in some instances a combination of timber and concrete, cannot be said to possess substantiality and durability, and a change was necessary in order to enable them to compete with stone structures built in the usual manner. The modes recently adopted in constructing the piers of the Westminster and the Chelsea Bridges without coffer-dams have effected this, and these works are examples of success in departing from rules without reason, and in applying scientific principles to the practice of bridge building.

Application of Concrete.—In this mode of construction, béton or hydraulic concrete has played an important part, and it also forms a leading feature in the plans for marine works.

Concrete, though employed in Roman and mediæval times, was allowed to go out of use, and since then it has not until recently been much recognized as a constructive material by the engineers of this country, who have, for marine purposes, placed their faith chiefly in works of cyclopean masonry, constructed within coffer-dams, or built under water by the *diving bell*. The French engineers deserve the credit of having been, for a longer period in modern times, alive to the value of béton as an important auxiliary in hydraulic works.

For some time, however, its value has been more appreciated in England as a substitute for masonry, and it has been employed in some important works. Still, its use is chiefly confined to forming a homogeneous and monolithic-bearing stratum for foundations, and not properly speaking as a constructive material, to which latter purpose it is more especially the author's object to direct attention. In particular, there are but few examples of the application of liquid concrete deposited and allowed to set in the water in the construction of submarine works.

There are three modes in which concrete may be applied for constructive purposes,—building it in mass and allowing it to set before water has access to the work, as has been adopted in the construction of the walls of the Victoria *Docks*, and in those of the London Docks; preparing it first in blocks and allowing it to harden before being used, as employed by Walker at the Dover Breakwater, and by Hawkshaw for the new sea forts for protecting the arsenals of Plymouth and Portsmouth; and depositing it in a liquid state and allowing it to set under water, as practised upon a gigantic scale by M. Noël, in the construction of the large Government Graving Docks at Toulon. In the latter case hydraulic concrete has been deposited in a liquid state in the sea water, at a depth of about 40 ft., forming a vast rectangular trough of béton about 100 ft. wide, of the length of each dock respectively, and with walls and bottom about 16 ft. thick. After the béton had set, the water was pumped out from the interior, an inner lining of masonry to form the altars, stairs, and floor was built, the caisson put into its place, and the concrete side of the trough at the entrance having been removed, the dock was complete.

The facilities for making béton or hydraulic concrete, which has the invaluable property of setting under water, and of thus forming an artificial rock or stone, are very great; as it may be formed either from the naturally hydraulic limes, the artificially hydraulic limes or cement, or from the rich or non-hydraulic limes, rendered hydraulic by the admixture of other substances, such as *pozzuolana*, minion, or iron-mine dust.

The béton made from the naturally hydraulic limes, which are found extensively in this and other countries, is the most to be depended upon. The blue lias in England, the limestone of Arden, found near Glasgow, and that of Theil in France, are good specimens of their kind, possessing in an eminent degree the property of setting under water. Of the Arden lime, the author and his partner have had abundant experience in the dock works at Glasgow, Greenock, and other places. As to the blue lias, its extensive employment in the docks at Liverpool, London, and other important works throughout the kingdom, is proof of its good properties. The hydraulic limes of France have been still more severely tested, by their application for the formation of the large concrete blocks used for the protection of the seaward side of the French breakwaters. It may be useful to mention, for comparison, the proportions of some of the concretes made from these various limes. The Arden lime concrete, employed by Bell and Miller for the foundations of the large Graving Dock at Glasgow, was composed of 1 part of ground Arden lime, 1 part of iron-mine dust, 1 part of sand, and 4½ parts of gravel and quarry chips. The lias concrete, used at the recent extension of the London Docks by Rendel, consisted of 1 part of blue lias lime to 6 parts of gravel and sand.

The proportions adopted for the blocks of the Mole at Marseilles, were 2 parts of broken stones to 1 of mortar, the latter being composed of 3 parts of Theil lime to 5 of sand.

A knowledge of the mode of composing artificial hydraulic limes is of great importance in situations where natural hydraulic limes are not easily procurable. Smeaton was the first to point out that it was to the clay or silicate of alumina in the composition of the hydraulic limes that they were indebted for their peculiar property. Subsequently the able researches of Vicat showed by actual experiment how all the rich or non-hydraulic limes might be rendered eminently hydraulic by burning them with a certain proportion of silicious clay. Indeed, to Vicat is due the credit of having reduced the knowledge of limes to a system, and of having shown the practical application of concrete as an eminently constructive material. The excellent artificial *cements* now manufactured are most valuable to the engineer; and the concrete made with Portland cement can hardly be surpassed. That used at the new Westminster Bridge is harder and more compact than the greater number of building stones, even where put down in the bed of the Thames, and where it is exposed to the running stream. Portland cement concrete is also extensively used for the artificial blocks, weighing from 6 tons to 10 tons each, which form the hearting of the breakwater at Dover and that at Alderney, the proportions being 1 part of cement to 10 parts of shingle.

Some substances, such as pozzuolana—a volcanic production found chiefly in Italy—have, in consequence apparently of silicate of alumina being predominant in their composition, the property of giving hydraulic qualities to the rich or non-hydraulic limes. It is of these that the concrete is made, which has long been used for marine works on the shores of the Mediterranean; and, indeed, the piers at some of the Italian ports have been constructed almost entirely of hydraulic concrete. Daniel Miller, the author of this paper, had an opportunity of examining at Genoa the extension of one of the moles of the harbour, the inner side of which has a vertical wall constructed under water entirely of pozzuolana concrete simply thrown into the sea from baskets carried on men's heads, a boarding confining it to the shape of the wall. In a short period it set quite hard, so as to enable the upper part of the wall, which is of stone, to be built upon it. The outer side of the mole, which had been previously made, was formed by stones deposited "à pierre perdue." Though the depth of the quay wall was not great, this shows the confidence which the Italian engineers have in concrete applied under water in a soft state. The piers of the new basin constructed by the Austrian Government at Pola, in Istria, are also formed, in a similar manner, of concrete confined between rows of timber piling.

Perhaps the most striking application on a large scale of pozzuolana concrete is in the great mole which protects the port of Algiers. To form the mole, blocks of béton of immense size, so as to be immovable by the force of the sea, were employed. Some of these were formed *in situ* by pouring the concrete into large timber cases without bottoms sunk in the sea in the line of the mole. Other blocks of a smaller size, though upwards of 30 tons in weight, were made on shore, being moulded in strong wooden boxes. After the béton had set, the boxes were removed, and the blocks were launched into the sea to find their own level. The béton for the blocks *in situ* was composed of 1 part of rich lime in paste, 2 parts of pozzuolana, and 4 parts of broken stone; that for the blocks made on shore was formed of 1 part of lime in paste, 1 part of pozzuolana, 1 part of sand, and 3 parts of broken stone. These blocks set sufficiently hard in twenty-four hours to resist the shocks of heavy seas, and the mole now stands firmly, instead of being, as it was when formed of loose blocks of stone in the time of the Moors, nearly destroyed every winter.

The French engineers have shown great boldness and skill in the application of béton, as exemplified in the Pont de l'Alma over the Seine, the arches of which, as well as the piers, are formed of rubble concrete; in the new Graving Dock at Toulon; and in the formation or protection of breakwaters by enormous artificial blocks of béton, as carried out at Marseilles, Cherbourg, La Ciotat, Cette, Vendres, Cassis, and Algiers. When Miller inspected the mole, or breakwater, which encloses the harbour of Marseilles, he found the huge rectangular concrete blocks, weighing upwards of 20 tons each, by which its seaward side is protected on the "pierre perdue" principle, perfectly entire and sharp in their outline, though they had been exposed for many years to the action of the sea. Anyone standing upon that mole, and witnessing in a gale the heavy seas breaking with tremendous force on these concrete masses and recoiling harmlessly, could have no doubt as to the efficiency of concrete as a constructive material.

Hydraulic concrete, to be effective, requires care and attention in its manipulation, and in the regulation of the proper proportions of its materials. Any failures must have arisen from inattention to these or similar points, as there is ample experience to show that, when properly made, every confidence may be placed in its strength and durability. Even where stone is abundant, this material may be often employed with economy and advantage; but where stone cannot be obtained, the importance of being able to form an effective substitute, out of materials of so little value, and so widely distributed, can hardly be overrated.

Construction of Dock and Quay Walls without Coffer-dams.—In sea water the engineer has to encounter enemies which do not exist in fresh water, or at least only to a trifling extent. The "teredo navalis" and other worms quickly destroy timber, and the corrosive action of the sea water, and other peculiar properties, have a prejudicial effect upon iron. In consequence of these deteriorating influences, these materials have not hitherto been much employed in sea works where durability is essential. There is no doubt, however, that they may be employed with advantage, if protected from the destructive action alluded to; and whatever materials may be used, it is desirable that the surfaces exposed to the sea should be of continuous stonework or other material capable of resisting its effects.

As Engineers-in-chief for the Albert Harbour at Greenock, D. Miller and his partner Bell have had an opportunity of introducing a new system for the construction of sea-walls and quays in deep water, without the aid of coffer-dams, by which a large saving is effected, and works of great solidity and durability have been secured.

The accommodation for the loading and discharging of the shipping of Greenock consists of three open tidal docks or harbours, the most recent having been constructed by Locke. Extensive schemes for wet docks have been proposed at different times by several engineers, particularly by Rennie, Telford, and Walker and Burges, but hitherto no wet docks have been constructed, as it has been considered that the moderate range of the tide—from 8 ft. to 10 ft.—does not render them indispensable, and the trade is found to be efficiently worked by the present system. In the additional accommodation the system of harbours is adhered to, though provision is left for conversion into wet docks by the addition of locks and gates, should this at some future period be deemed advisable.

The new works are situated on the west side of the town, and, in order not to interfere with valuable shore ground, they have been projected almost entirely beyond the high-water line into the sea. The depth of water at the outer line being considerable, the amount of excavation required in the interior is comparatively little. The outer sea pier, according to the plan proposed by the engineers, encloses a large extent of shore as well as the Bay of Quick, and when carried out to the full extent will be upwards of 3000 ft. in length. Within this area there is a space for two harbours, each 1000 ft. in length, 15 ft. deep at low water, or 25 ft. at high water, with entrances 100 ft. wide.

The depth of water along the line on which a coffer-dam must have been constructed, had such been contemplated, is in many places nearly 30 ft. at high water; and taking into account the length, and that it must have been of strength sufficient to resist the storms of winter, it could hardly have cost less than 50,000*l*. Besides the great cost of a coffer-dam, there was another difficulty, as, owing to the line of the proposed new pier being close to the edge of the deep-water channel, it would have been necessary to project the coffer-dam so far into the channel as to have formed a serious interruption to the traffic. In consequence of these difficulties, and from considerations of economy, it had been the intention of the trustees to use timber for the outer piers of the harbour, and the engineers were instructed to make their plans accordingly. It was the opinion, however, of Miller and his partner, that in a situation where the sea worm is very destructive, the work ought not to be constructed of such a perishable material, and that it was quite possible to build a solid structure, so as to avoid the difficulties referred to, in an economical manner. In order to effect this, they proposed to construct the outer pier and quays forming the seaward side of the dock without coffer-dams, so that the pier might itself serve as a coffer-dam for the interior operations in the harbour which would afterwards be required. The seaward pier is 60 ft. wide at the top, having quays on both sides.

The mode in which the work was designed was to form the walls under low water of a combination of cast-iron guide-piles in the front, with a continuous stone facing slid down over and enclosing these, and of concrete backing deposited in a soft state, all of which could be easily accomplished from above the water line. Timber bearing-piles were to be used in the body of the walls where required, and the upper part of the walls from the low-water line was to be carried up of masonry in the usual manner, Figs. 3876 to 3881.

Granite from the Ross of Mull was substituted for freestone, for the stone facing under the low-water line, as it could be obtained in large blocks at a moderate price.

The first operation in the construction, when the water is not sufficiently deep, is to dredge out two parallel trenches to 17 ft. below low water, for the foundations of the walls. A staging of timber piles is afterwards erected in the line of the pier over the whole breadth, for carrying the tramways, travelling cranes, and piling engines. Cast-iron guide-piles are then driven from the staging, with great precision, 7 ft. apart, in the line of the face of each quay-wall. These piles are driven till their heads are near the low-water line, and they form guides for putting down the stone facing. They are connected at the top transversely by wrought-iron tie-rods stretching through the pier, cottered into sockets and binding the heads together. At first it was thought that there would be some difficulty in driving the iron guide-piles with the required exactitude, but this was overcome by pile engines of peculiar construction, devised by William York, one of the contractors, Figs. 3882, 3883. These travel on the rails of the scaffolding, and are furnished with long arms projecting downwards, strongly stayed by diagonals, and forming a trough, into which the pile is placed, and from which it is driven by the pile engine in the manner of an arrow from a cross-bow, being obliged to go down perfectly straight.

The ground is very unequal, the hard substratum, or red till, being in some places 20 ft. below the bottom of the wall, the upper strata being mud and soft sand. In such cases timber piling, driven to the same level as the iron piles, is used to form a platform for sustaining the part of the wall above low water; but where the ground is firm this is not required. When the proper depth has been dredged out and the piling driven, a bed of hydraulic concrete 3 ft. thick and 20 ft. wide is deposited in the trenches, to form a base for the wall to spring from, and to give a large bearing surface. Into the grooves formed by the flanges of the iron piles large granite slabs, from 18 in. to 2 ft. thick, are slipped, the bottom one resting upon a concrete base and on a projecting web cast on the piles: not more than three stones fill each compartment between the piles, 16 ft. in height and 7 ft. in width. These stones slip into their places with the greatest ease, and form the face of the wall under water. Behind this facing hydraulic concrete is lowered under the water in large boxes having movable bottoms, and is discharged in mass to form the body of the wall. To confine this at the back before it has set, loose rubble stones are deposited and carried up simultaneously with it. The hearting of the pier, consisting of hard till, stones, and gravel, is deposited afterwards, and the whole carried up to the level of low water.

The entire mass, piles and stone facing, concrete backing and hearting, is allowed to consolidate for a sufficient time; after which the heads of the iron piles and the granite facing blocks are capped at the level of low water by a granite blocking or string course, and the upper portion of the walls is carried up in freestone, ashlar, and rubble. The remainder of the hearting between the walls is then filled in, and the whole is finished with a granite coping and causeway. The

3876.

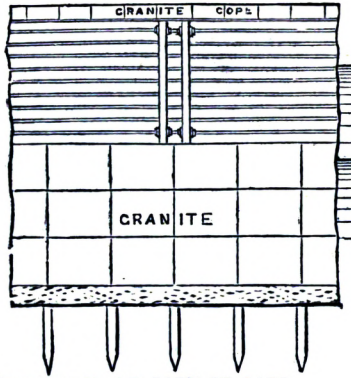

ELEVATION OF PART OF PIER

3877.

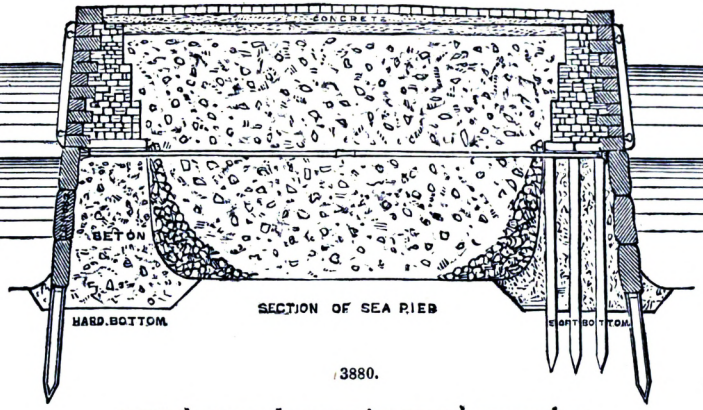

SECTION OF SEA PIER

3878.

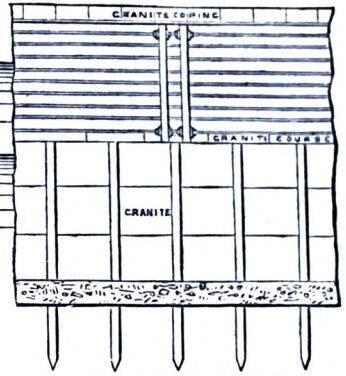

ELEVATION OF PART OF PIER

3879.

PLAN OF PART OF PIER AT LOW WATER

3880.

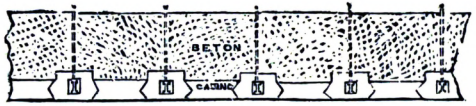

3881.

PLAN OF PART OF PIER AT LOW WATER

NEW MODE OF CONSTRUCTING BREAKWATERS

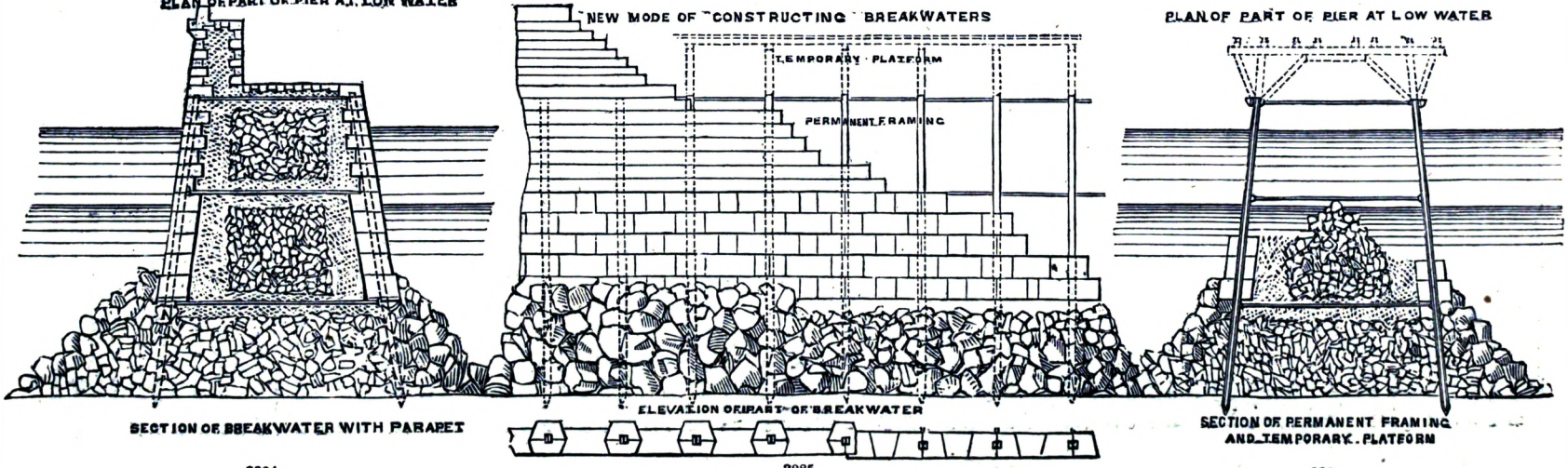

SECTION OF BREAKWATER WITH PARAPET

3884.

ELEVATION OF PART OF BREAKWATER

3885.

SECTION OF PERMANENT FRAMING AND TEMPORARY PLATFORM

3886.

walls are 33 ft. in height from the foundations, 11½ ft. thick at the concrete base, and they diminish to 5 ft. thick at the top.

Particular care is taken with regard to the hydraulic lime. It is burnt at the quarries, but is brought from thence in the shell by the railway in covered wagons, so as to preserve it from wet. It is ground at the harbour works, for which purpose, and for mixing the mortar, there have been erected four vertical double-roller mills and two sieves, driven by an engine of 20 horse-power.

In the part of the pier which has been already executed, the stone facing under low water being made to slip into the groove formed by the flanges of the iron piles, the outer flange is left exposed to the action of the salt water, which no doubt will in the course of time exert an injurious effect upon the iron, Figs. 3878 and 3881. To remedy this, it is intended in the remainder of the work to reverse this plan, and to make the grooves in the stone facing, into which the outer iron piling will fit, Figs. 3876 and 3879. The stone blocks will therefore overlap the iron piles, and form a continuous stone facing, so that no part of the iron will be exposed to the action of the salt water. The grooves will be filled from the top with cement, which will enclose the iron flange, and effectually preserve it.

3882.

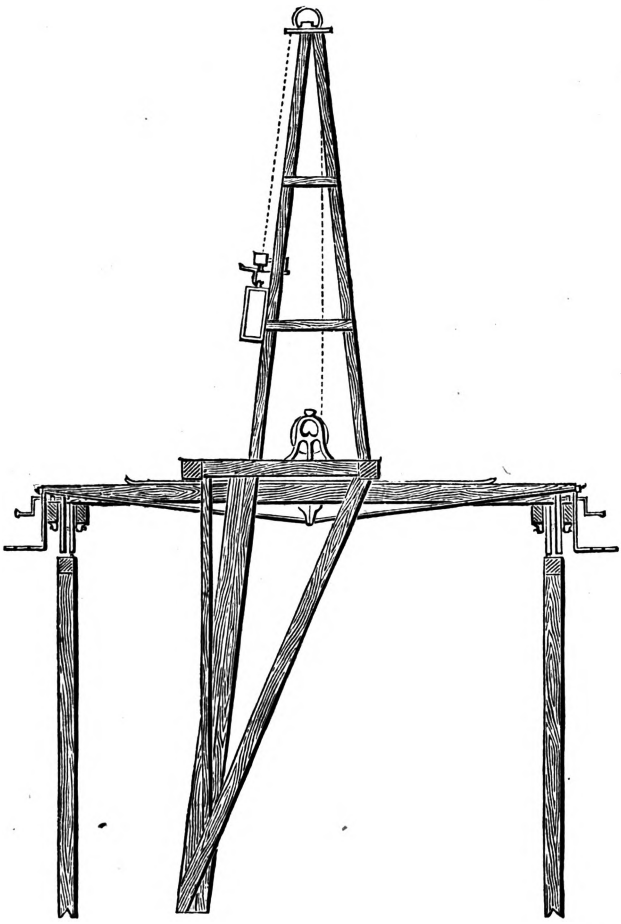

3883.

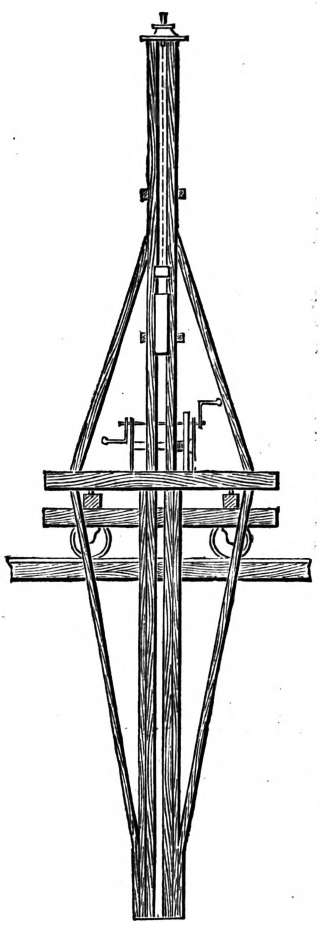

The concrete employed is formed of Arden hydraulic lime, iron-mine dust, sand, gravel, and stone chips—the lime and the mine dust being well ground, under edge stone mills, before being mixed with the other materials. The proportions are by measure—1 part of ground lime, half a part of mine dust, 1 part of sand, and 3 parts of gravel and stone chips. Immediately after being mixed, and when brought to a proper consistency with water, it is conveyed to where it is to be used, is let down under water in the discharging boxes, and in a short time sets very hard. The boxes used are either of iron or of wood, and contain 1 cub. yd. each. Those of iron are found to be preferable, as the buoyancy of the wooden ones renders them somewhat unmanageable in a tideway, after their contents have been discharged.

This mode of constructing walls in deep water without coffer-dams has proved very successful, and a sea pier of great solidity and durability has been formed at a comparatively moderate cost.

In constructing quay-walls on the foregoing principles, different modes of forming the stone casing may be employed; and particularly where stone of a softer nature than granite, such as limestone or freestone, is used, a still more efficient outer casing may be obtained, Fig. 3880. In it, blocks of stone, having orifices or holes cut in them, are strung or put down over the iron piles, so as completely to enclose them. These blocks have also grooves or projections on their sides, in

which are slid down intermediate slabs or blocks of stone, having corresponding grooves or projections. A continuous facing of stone, having all the stones locked into each other, is thus formed, and the iron piling is effectually enclosed. It was on this principle that the facing under low water was intended to have been formed at Greenock, previous to its having been suggested to employ granite instead of freestone. Still further to protect the iron from the action of the salt water, the holes round the piles would be filled up from above with cement well rammed down, so as to fill up all the joints, and to unite the stone and iron together. This plan admits of the iron piles being kept farther apart than when single blocks connect the piles. Concrete backing may then be filled in, and the structure be completed as previously described. Temporary sheet piling or boarding, instead of loose stone, may be employed to keep the concrete in its place until it has set. In many cases, blocks of beton, which can be easily moulded into the shapes required, may be advantageously substituted for stone in the facing, as it has been proved by experience that, when properly made, they possess the requisite strength and durability.

The range of different purposes to which this system of founding marine structures is applicable is very extensive, and works such as the formation, re-facing, or reconstruction of quay-walls; the formation of docks or tidal basins on sites covered by the sea; embankment walls along the shores of seas or rivers; the foundations of lighthouses, beacons, or forts which may require to be made in the sea; the construction of breakwaters enclosing harbours of refuge; may be effected with a speed, facility, and economy not hitherto attainable.

Although various Royal Commissions and Parliamentary Committees have elicited much valuable information on this subject, the main object of diminishing the enormous cost of these works, and of providing a durable and substantial, and at the same time economical, barrier to the force of the sea, is as yet a desideratum. So important, indeed, has this become, that in 1860 a Select Committee of the House of Lords was appointed to inquire, how far it might be practicable to adopt some plan, for the construction of breakwaters and harbours of refuge, less costly than the system of solid masonry then in use. Various plans were discussed, and amongst them floating breakwaters; but the investigation failed to establish any effectual substitute for the present mode of construction.

The plans about to be described will, in our opinion, have a material effect in filling up this want. Before proceeding, however, it will be necessary to refer briefly to the principal modes of construction hitherto adopted, and to consider the peculiar phenomena by which such structures are affected.

The most common mode of forming breakwaters is the "pierre perdue," or long-slope system. This is simply the deposit in the sea of a vast amount of loose rubble stone, rising to about the level of high water, allowing it to take its own level, and to be acted upon by the sea until its section assumes the permanent form which this action gives it. The seaward side obeys the laws of ordinary sea beaches, and forms itself into a long sloping shore, involving the employment of an enormous amount of material before the mound reaches the height to give the required protection. Such a system is only applicable where stone is abundant, and can consequently be deposited at a cheap rate. Of this system the Plymouth, Cherbourg, and Holyhead breakwaters may be taken as examples, Figs. 3887, 3888.

3887.

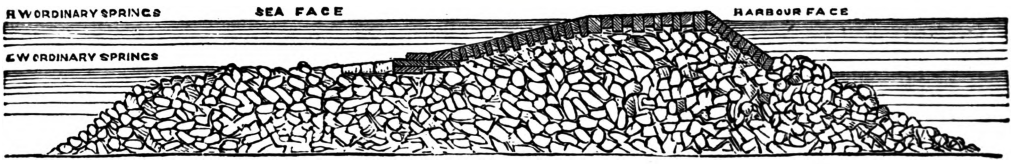

3888.

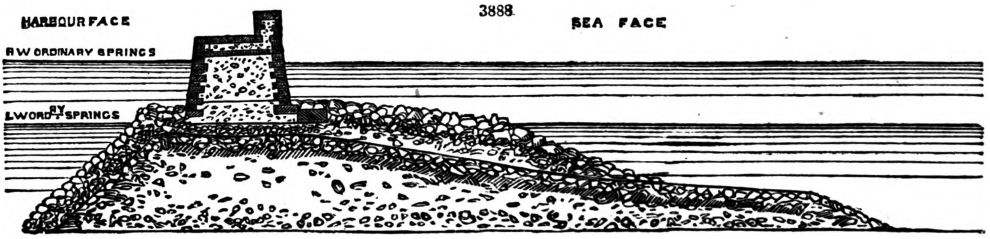

In situations where stone is not abundant, the opposite principle, called the vertical system, is adopted. In this mode the walls are built upright from the bottom; and as all the material below low water is put in place by diving apparatus, and is of an expensive nature, the cost of a work executed in this way is very great. The Dover Breakwater, in course of construction, is the most prominent example. It is built up solid from the bottom of the sea, the exterior facing being of ashlar granite blocks rebated, or checked into each other, and the hearting of rectangular blocks of concrete, built in the same way as ashlar masonry up to the level of high water, above which it is filled in with liquid concrete, Fig. 3875.

Besides these systems, which may be taken as the extremes, an intermediate form of section, combining both to a certain extent, is adopted. It consists in carrying up a rubble mound to within a certain depth below low water, and upon this building the remainder of a vertical construction. The Alderney Breakwater may be taken as representing this system to a partial extent, Fig. 3894.

It has been a subject of discussion as to whether the long slope or the vertical wall was the better section for breakwaters, and as to the relative force of the sea exerted upon them. The observations which have been made on waves may be said to have settled this point in favour of vertical walls, as it has been clearly shown that waves in deep water are chiefly oscillatory in their character, the fluid having little progressive motion in itself, and consequently exerting but little force on objects opposed to it; but in shallow water waves assume an entirely different character, as they acquire a progressive motion, becoming waves of translation, in which the fluid is carried bodily forward in a horizontal direction, and in consequence it strikes any body opposed to it with great percussive force. Vertical walls, therefore, which rise from the deep water, being only subject to the oscillatory movement of the waves, are least exposed to the destructive effects of storms. The evidence taken before the Royal Commission in 1859 seemed to be conclusive on this point, and the opinions of the Commissioners, as developed in their report, may be considered to have set this subject at rest. But whatever difference of opinion there may still be upon this matter, there can be no question as to the vast saving of material by vertical walls, and of the great economy which would result, provided a simple and easy mode of construction could be adopted. The vertical system has, besides, the great advantage of being applicable in many cases as quays for vessels lying alongside to load and discharge, which may be turned to valuable account both for commercial purposes, and in times of war, for the rapid shipment or debarkation of troops, stores, and other material.

The experience, however, derived from the formation of the great breakwaters on the "pierre perdue" or long-slope principle, such as Plymouth, has been very valuable. The examination of the sections which the materials assume, shows that the great disturbing action of the sea, or conversion of the waves of oscillation into those of translation, does not extend to any considerable depth; as it is found that the long sloping beach terminates generally at from 12 ft. to 15 ft. below low water, after which the inclination becomes much steeper, the materials assuming nearly the form due merely to the natural angle of repose, as if unacted upon by any force except that of gravity. The inclination on the seaward side within the tidal range, and to the depth of 12 ft. or 15 ft. below low water, is generally 5 or 6 horizontal to 1 vertical, but below that depth it is only from 1 to 1¼ horizontal to 1 vertical. It is the long slope which these breakwaters assume to a certain depth, that causes the enormous absorption of material; but it appears that a mound of rubble may be deposited to within a certain distance of low water which will not have this long slope, and consequently will only require a comparatively small quantity of material. The consideration of these facts shows that in the generality of cases, the vertical and "pierre perdue" systems may be combined with advantage and economy, by first depositing a rubble mound to about 15 ft. below low water, and from that point carrying up the remainder of the breakwater by vertical walls.

A great improvement in the facility of constructing these breakwaters, when such an immense quantity of material has to be deposited, was the introduction by Rendel of timber staging carried on piles in advance of the work, and sustaining lines of rails, by which the material can be brought down and be deposited in the sea with a rapidity before unattainable. The consumption of timber is, no doubt, very great, as much has to be left imbedded in the work, and there is considerable destruction besides; but this is amply compensated by other advantages. By this system an average of about a million tons of stone a year have been deposited at Holyhead, and a similar plan is pursued at Portland, Fig. 3893.

Massive staging is also employed at the vertical breakwater at Dover, for facilitating the building operations. Indeed, staging may now be considered essential in the generality of cases for the economical construction of such works.

The breakwaters of the French engineers are generally formed "à pierre perdue," but upon a different method from that pursued in this country. Thus, at the Plymouth Breakwater, Fig. 3887, only large blocks of rubble stone were deposited, the small being thrown aside, and at Holyhead and Portland, the large and the small rubble were deposited promiscuously; while the French engineers usually employ the small rubble for the core, and reserve the larger blocks for the outer coating. Furthermore, they protect the seaward side by blocks of béton, thrown in to take their own position, and of such a size (generally from 20 tons to 30 tons) as effectually to resist displacement by the utmost force of the waves. These blocks assume a slope as steep as 1 to 1 under the water line, so that the mass of material in a breakwater thus constructed, is considerably less than where smaller materials are employed for the seaward face. The moles of La Joliette and Napoleon which enclose the harbour of Marseilles, are excellent examples of this mode of construction, Fig. 3889.

Having thus glanced at the general principles which affect breakwaters, and described the modes of construction usually adopted, the conclusion to be arrived at appears to be, that the vertical system is that which best resists, or rather averts, the destructive action of the sea, and requires the smallest amount of material. However, both systems, the long slope and the vertical, as at present carried out, are very expensive, the former from the quantity of material which is required, the latter from the costliness of the material and the mode of construction. The one system may be characterized as involving the maximum in quantity, and the minimum in cost of material; the other, on the contrary, the minimum in quantity and the maximum in cost of material. The object sought to be attained by the system about to be described is to effect a minimum, as far as possible, both in the quantity and in the cost of the material.

According to circumstances, breakwaters on this system would be constructed either wholly vertical, extending from the bottom, or partially vertical, springing from a rubble mound. For the sake of comparison, the mode proposed by Daniel Miller, Figs. 3884 to 3886, is designed to suit the conditions usually prevailing; say a range of tide of 15 ft., and a depth at low water of 6 fathoms, being about the same as at the Plymouth Breakwater, and as at Hartlepool, Filey Bay, and the entrance of the Tyne, where the most important harbours of refuge have been recommended by the Royal Commissioners. The section, Fig. 3891, represents a breakwater with a parapet, but

this is not indispensable to the main object of a breakwater, and is only required in certain cases, as where the inner side is to be used for commercial purposes. Where the parapet can be dispensed

3889.

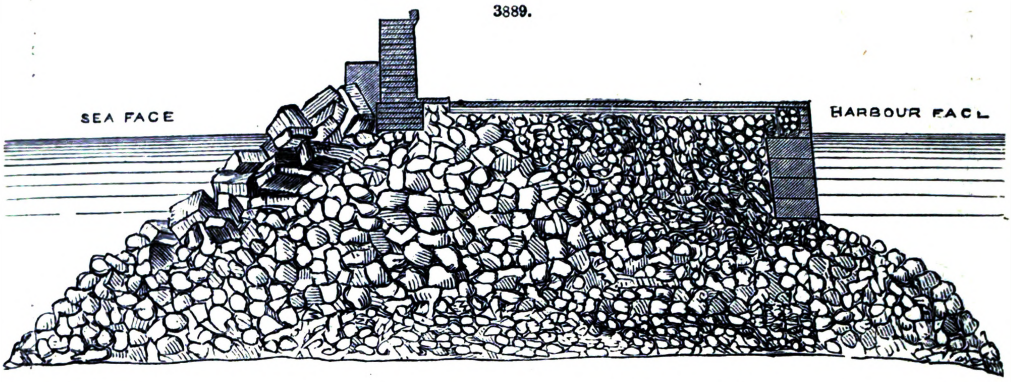

3890.

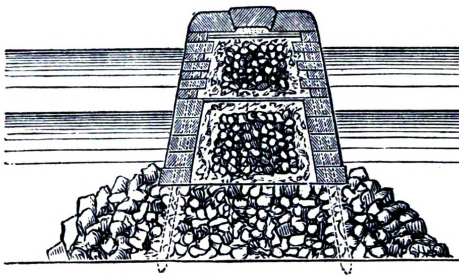

3891.

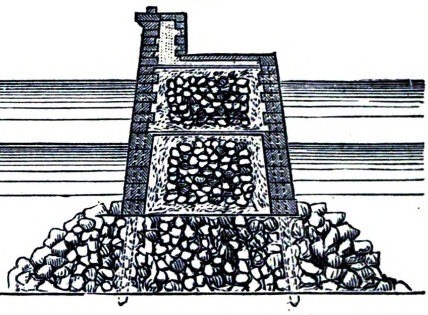

with, the top of the breakwater may be capped by large blocks of béton, or stone, of such a weight as not to be displaced by the heaviest seas, Fig. 3890.

The principal feature of the new plan is a framework of iron, formed of piles or standards, and ties, which serves as the staging for all the constructive operations, and afterwards becomes an essential portion of the structure, by binding together a strong casing of stone or other sufficiently durable material, which encloses and forms the facing of the breakwater, allowing the interior to be filled up with loose rubble or other cheap materials, which may be cemented into a solid mass by means of liquid béton or concrete. It will be pre-

3892.

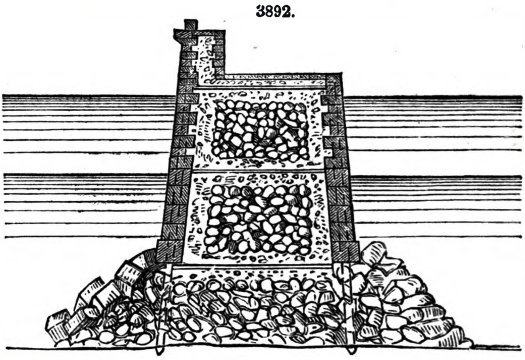

3893.

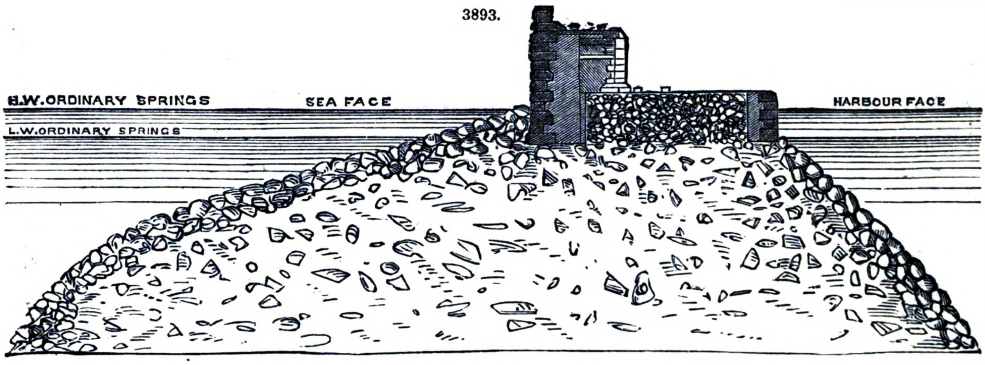

ferable for breakwaters to make the standards of wrought iron, and in the generality of cases it will not be necessary to drive them into the ground, but simply to set them in place.

The mode of proceeding is to erect the iron staging in advance of the work, which may be done

either by driving, screwing, or guiding the piles, or standards, from a machine placed on the platform, and travelling along as it progresses. This machine will have long guides firmly stayed and set accurately in position, into which the iron piles will be placed, and then driven in a similar manner to that pursued at Greenock. When two piles are erected in place, they are connected transversely by iron ties, and by the temporary platform at the top for bearing the rails, and the piling machine is then moved on to drive the next set, and so on. Following this operation come the wagons depositing the material to form the rubble mound, which collecting round the lower part of the standards, firmly fix them in their places, and give stability to the staging. When the mound has risen to the required height, say 18 ft. below low water, the cranes from the staging above commence lowering the casing blocks for the facework. These are made to enclose the iron standards, and are formed so as to be arched or locked into each other, and thus to resist any pressure arising from the backing. They can be made to break bond, or to slide down without breaking bond, as may be considered desirable; but the former plan permits the standards to be kept at a greater distance apart, and the blocks to be of less dimensions, and at the same time of greater strength.

3894.

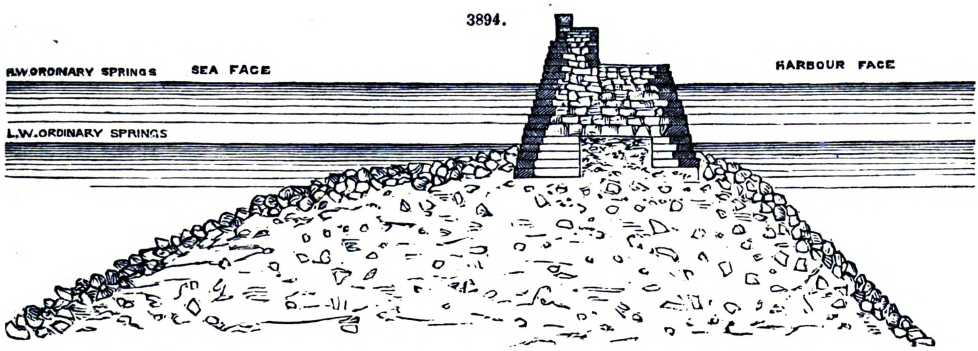

Simultaneously with the building of the casing, the hearting of the work, rough rubble or other suitable material, is to be deposited from the wagons on the staging, filling in from the centre, while backing of béton, or hydraulic concrete, will be lowered down in large boxes, and discharged behind the stone casing, consolidating and cementing together the rubble hearting, as it is filled in and falls down.

It will be observed that the whole of the facing is rendered continuous, and by all the blocks being arched, or grooved into each other, it is impossible that any individual block can get out of place. This is a danger greatly to be feared in structures of this kind built in the ordinary way, as the action of the compression of the air in the joints of the masonry, by the pressure of the waves, and the after-expansion when the waves retire, is sometimes so great as to blow out the stones, thereby endangering the whole structure.

By this system great solidity and strength may be obtained, as the whole structure is bound firmly together by the iron framework; while the manner in which the stones of the facing are locked into each other, and in which the concrete will penetrate and solidify in a short time the whole mass, will realize as nearly as possible the idea, which should be the object of attainment in such structures, of a monolith, or solid rock in the bed of the ocean.

The blocks forming the casing under water may be either of stone or of béton. When the former cannot be conveniently procured, the latter may be used with advantage, particularly as it can be so easily moulded into the required shapes, and almost of any size. The power of such blocks to resist the action of the sea for an indefinite period is now fully confirmed. These may at least be generally adopted for the inner walls of breakwaters. Indeed concrete blocks, built in the ordinary way, have been already used by Walker and Burges at Alderney, Fig. 3894, for the inner facing.

The great economy of this system of constructing breakwaters would arise from the smallness in quantity and the cheapness of the bulk of the material. The quantity of material in this breakwater compared with that in the Plymouth Breakwater on the long-slope principle, in the same depth of water will be about as 1 to 4, and the disparity of cost is not less striking, the Plymouth Breakwater having cost nearly 900*l.* the lineal yard.

In comparing with any other mode of construction, the iron framework may be allowed to go for nothing, as staging of some kind must be used for the speedy and economical construction of any kind of breakwater. This framework of iron standards will not cost more than timber staging, and, indeed, far less than in cases where an immense quantity of staging requires to be used for the deposit of the enormous mass of material of long-slope breakwaters, such as at Holyhead; while it will be far more secure, in consequence of its inherent strength, the heavy nature of the material, and the small surface presented to the action of the waves. The buoyancy of timber staging is an element which causes its own destruction, as is exemplified at Holyhead, where it is admitted that for every piece of timber another piece is required to make up for the loss.

Another important advantage is the great speed with which it may be constructed, from the mass of the material being of a nature easily deposited, and from the facility with which operations may be carried on upon a long stretch of the work at one time. In situations where the materials for the construction of ordinary breakwaters cannot be obtained, the advantages of this system would be still more striking. Dover may be taken as an example, there being no stone in the neighbourhood suitable for depositing "à pierre perdue," or building vertically in the usual modes

of construction. By the system proposed the harder chalk from the cliffs and shingle could be used for the hearting, as in a structure so firmly bound together these materials concreted with béton would serve the purpose quite as well as any other. In forming the rubble mound the example of the French engineers might be followed with advantage by forming the core of smaller and inferior materials, and for this the chalk and shingle would be quite suitable. This would be protected by a thick layer of rubble, and on the seaward side by a layer of concrete blocks, of such a size as would not be disturbed by the sea. The vertical superstructure would be constructed of chalk or sandstone rubble, concreted by béton for the hearting. A breakwater upon this construction, Fig. 3892, Miller estimates could be built at Dover for 290*l.* per lineal yard. The present breakwater for the same depth of 45 ft. at low water is contracted for at 1245*l.* per lineal yard, so that there would be the enormous saving of upwards of one million and a half sterling per mile. The difference in the cost of construction, vast as it is by this system, is not the whole saving, as the time occupied is an important element, affecting the final cost of such a work, the interest on the outlay being lost until the harbour becomes available. There can be no doubt of the solidity and durability of the Dover Breakwater, but considering its enormous cost, and the distance into the future before its completion will render it available for commercial or for war purposes, the wisdom of prosecuting it upon the present mode of construction may be well called in question. Upon the construction proposed the breakwater could be completed and be available as a harbour of refuge for the naval and commercial fleets of the country in less than five years, at a cost of little over 1,000,000*l.*

Breakwaters and piers have been frequently made of timber framing and casing, confining a mass of rubble. Extensive piers on this principle are in existence in Boulogne, Calais, Dunkirk, and other ports; but it is evident that such a system, from the timber being exposed and the consequent want of durability, and from their liability to sudden destruction when once the casing gives way, must prove very expensive in the end. This system has been revived, though upon more scientific principles, by Abernethy and Michael Scott. In these plans a structure composed of a casing of timber is formed of timber frames, standards, or piles and planking, and this casing is afterwards filled with rubble. But as the casing cannot be expected to possess much durability, it is proposed subsequently to enclose this structure by solid walls of masonry or composite blocks, for which the first structure will afford a convenient and substantial platform for bearing the rails and cranes necessary for executing this part of the work. There are two distinct operations necessary, therefore, to complete the work upon this mode in a permanent manner; first, the formation of the inner structure with its timber casing; and, second, the formation of the outer structure, for the purpose of making a casing of a durable character. The economy of making breakwaters of a durable construction on these modes has not been fully made out, chiefly arising from the great quantity of timber required and the necessity of employing two distinct casings, one of which must be superfluous.

The system which Miller has proposed will, we think, secure all the objects which appear to have been aimed at by these plans, but with greater simplicity and economy.

It is not essential that the standards employed in the system proposed by Miller should be of iron, as they may be of timber, but enclosed, as has been already described in the case of iron standards, in a casing of blocks of stone or of béton.

See Barrage Bridge. Canal. Cement. Coast Defences. Construction. Damming. Dock. Hydraulics. Locks and Lock-gates. Weirs.

HAULAGE. Fr., *Roulage;* Ger., *Förderung;* Ital., *Estrazione e trasporto del litantrace;* Span., *Arrastre.*

Haulage of Coal, taken from the Report of the Committee of N. E. I. M. Engineers, 1869.

Tail-Rope System, North Hetton Colliery, County of Durham.—In order to give an idea of the extent to which the tail-rope system can be applied in leading coals underground along an engine-plane with numerous curves and branches, the following description is given of the arrangement of wagon-way, and the method of working the tail rope, at North Hetton Colliery, which affords the best example of this system.

Fig. 3895 shows that there are two main wagon-roads in this pit, lying at right angles to each other—No. 1 plane being driven east, and No. 2 north. The following are the particulars of the engine and wagon-way;—

Engine.	
No. of cylinders	2
Diameter of cylinders	12 in.
Length of stroke	24 „
No. of drums	4
Diameter of drums	4 ft.
Size of rope (circumference)	2½ in.
The boilers are on the surface.	

Engine-plane.		
Rails	22 lbs. the yd.	
Gauge of way	2 ft. 4 in.	
	Main.	Tail.
Rollers.—Diameter	5 in.	8½ in.
Weight	26 lbs.	32 lbs.
Distance apart	21 ft.	21 ft.
Sheaves at curves	diam.	10½ in.
Tail sheaves	4 ft.	

When the ratio of the diameters of the pinion to the spur-wheel was as 1 to 2, the engine was found rather too weak for its work, and the ratio was therefore made as 1 to 3. The engine goes at a speed varying from 150 to 250 strokes a minute, the usual speed being about 180 strokes a minute. This makes the power exerted to be about 100 horse-power, and thus presents an example, which is rare, of a tail-rope engine working to the utmost of its power.

One end of the shaft of each set of drums is placed on a movable carriage, by means of which they are put into gear with the driving pinion. The drums are connected to the shaft by means of clutch gear. The engine and drums are placed beneath the wagon-way, and the wheels W and W¹ which direct the course of the ropes for No. 2 plane, as well as several other 4-ft. wheels upon

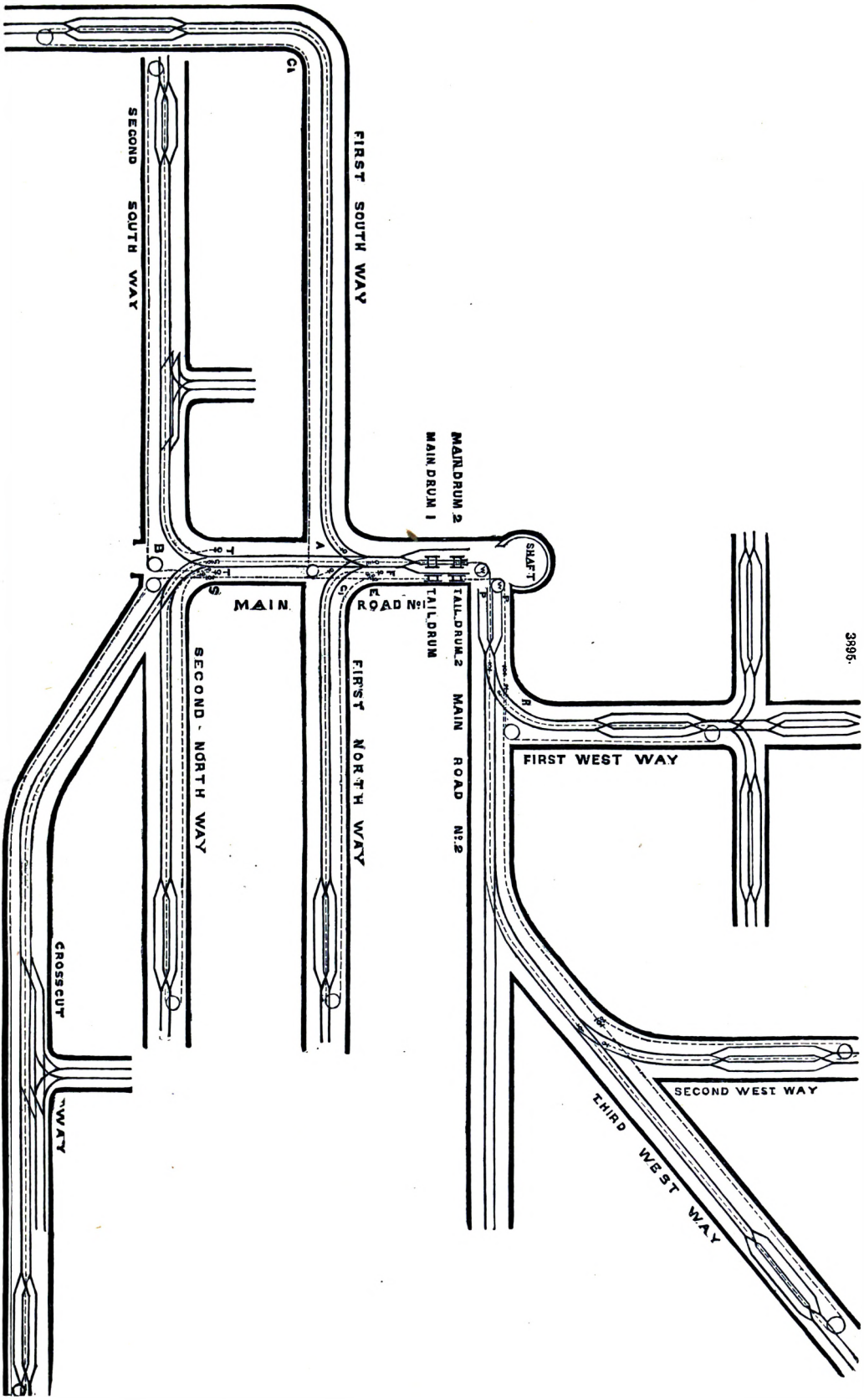
C1
SECOND SOUTH WAY
FIRST SOUTH WAY
MAIN DRUM 2
MAIN DRUM 1
SHAFT
B
A
MAIN
ROAD No1
TAIL DRUM
TAIL DRUM 2
MAIN ROAD No2
SECOND NORTH WAY
FIRST NORTH WAY
FIRST WEST WAY
3995.
CROSSCUT
WAY
SECOND WEST WAY
THIRD WEST WAY

these planes, are also placed under the way. The ropes for the No. 2 plane come to the surface of the wagon-way about the point P.

No. 1 Plane.

	Ways.				
	1st North.	2nd North.	X-Cut.	1st South.	2nd South.
	yds.	yds.	yds.	yds.	yds.
Distance from shaft	900	870	1350	1000	825
Rise or fall from shaft	fall.	fall.	fall.	fall.	fall.
	min.	min.	min.	min.	min.
Time from leaving the shaft to returning	10	9	8	10½	9½
Heaviest gradient rising outbye	1 in 10½ for each way.				
Tubs in set	21 for each way.				
Speed of set	About 10 miles an hour.				

It may be observed that none of the branches are of very great length, and that all the ways rise towards the shaft

No. 2 Plane.

	Ways.		
	1st West.	2nd West.	3rd West.
	yds.	yds.	yds.
Distance from shaft	580	1130	1200
Rise or fall from shaft	rise.	rise.	rise.
	min.	min.	min.
Time from leaving the shaft to returning	6	15	17
Heaviest gradient rising outbye	1 in 15	1 in 15	1 in 15
Tubs in set	35	35	35
Speed of set	About 10 miles an hour		

No. 1 plane consists of a main road, with two branches on each side; at the end of the main road is another way, which, after going in a cross-cut direction for a short distance, turns to the north. These five branches are all worked by two of the drums, the other two drums working No. 2 plane and its branches. On the plan (which is drawn to no scale, and is therefore in many places out of proportion, owing to the difficulty in showing clearly the arrangement of rails) the ropes are shown by dotted lines. In the second west way and the cross-cut way there are two stations; a description of the arrangement of which is given hereafter. The four curves leading from the main way to the branches each have a radius of about 22 yds.; the radius of the curve in the first south way is 4 chains, and of that in the cross-cut way about 5 chains.

No. 2 plane has one main road and three branches, two to the west and the other in a cross-cut direction. The curves to the branches are about 3 chains radius, and the curve upon the main road about 4 chains.

At the far end of each of the branches there is a siding, one way for the full and the other for the empty tubs.

At the inbye end of the first west way there are three putting stations, from which the tubs are led in short sets by ponies to the siding at the end of the engine-plane.

The full way of the shaft siding is raised several feet to form a kep, or incline; and when the set of full tubs has been drawn on to the top of the kep, the tubs are let down to the shaft as they are required.

Arrangement of Ropes.—In the working of this and all other tail-rope planes, two ropes are necessary, which are called main and tail ropes, the former being used for drawing the set of full tubs outbye, and the latter for taking the empty set inbye. When the main rope is bringing the full set outbye, the tail-rope drum runs loosely upon the shaft, and by applying the brake the tail rope is made to run steadily off the drum; when the tail rope is taking the empty set inbye, the main-rope drum is put out of gear, and the main rope is drawn inbye behind the set. It will be seen on the plan of this engine-plane that the ropes for No. 1 plane have a direct lead from the drums, whilst those for the No. 2 plane are taken round pulleys at a right angle not far from the engine.

On No. 1 plane the ropes connected to the engine are those of the cross-cut way, and the set is supposed to have just arrived at the shaft; thus the main rope is nearly all wound upon the drum. At the points A and B, Fig. 3895, there are shackle-joints on both the main and tail ropes. The shackle used is of this description, Fig. 3896, and is secured by the pin A.

3896.

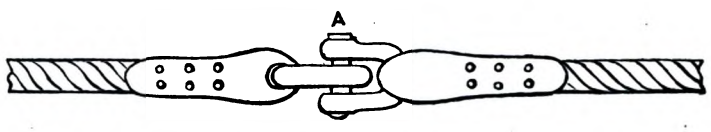

When the rope ends to which the set is attached are at the shaft, these joints are always at the points A and B, no matter from which way the last set came.

Most of the sheaves used in taking the ropes round the curves are fixed horizontally in walling built for the purpose, exhibited in Fig. 3897.

At C and C both the ropes are taken round the curves by small sheaves, as shown in sketch; but

at most of the curves only one rope goes round the curve, the tail rope passing round a 4-ft. sheave; this arrangement is much to be preferred.

3897.

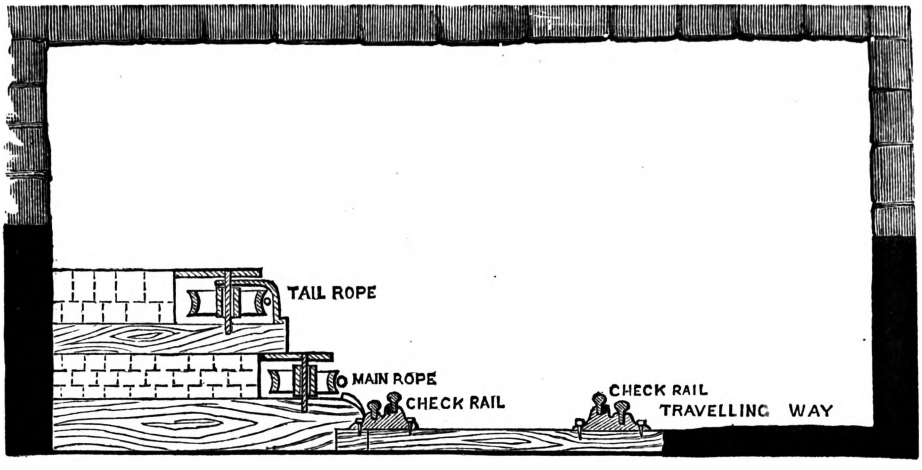

Both main and tail ropes are 2½ in. in circumference. The large sheaves at the curves, and the tail sheaves at the inbye end of each of the branches, are 4 ft. in diameter; these wheels are placed under the way, and the rails are laid over them. Where the ropes are shown to cross the wagon-way on the plan, they are arranged to pass under the road.

The total length of main rope on the plane is 2520 yds., and of tail rope 9636 yds.; and there are altogether 1390 small sheaves, and 14 4-ft. sheaves upon the planes.

Method of Working the Planes.—No. 1 Plane.—On referring to Fig. 3895, it will be seen that the ropes connected to the engine are those of the cross-cut way, and that the ends of all the other branch ropes are lying at the branch ends. Supposing that the next empty set has to go into the second south way, whilst the rope ends at the shaft are being disconnected from the full set and attached to the empty set, the boy attending the switches at B is disconnecting the shackles S S and connecting them to T T; this is done in about two minutes, and is generally finished before the set at the shaft is ready to come away; the boy then opens the switches for the second south way, and everything is ready for the set going in. The set of empty tubs is taken into the branch, and the full set returns to the shaft before the ropes are altered again. Should the first north way next be ready the ends E E are replaced by F F, the switches are put right, and the empty set goes in and the full set comes out. If the cross-cut way be next ready, it will be seen that, to put the ropes right for this way, four rope ends will have to be connected, two at the station A, and two at B.

No. 2 Plane.—It will be seen, Fig. 3895, that the ropes connected to the engine are those of the third west way, and here also the set is supposed to be at the shaft. All the branches on the plane No. 1 are to the dip; on the contrary, all the branches from the main road on No. 2 plane are to the rise from the shaft.

The branch ropes on the No. 2 plane are connected in the same way as on No. 1 plane, and here also it is necessary to connect four rope ends when the third west way has to be worked, if the second and then the first west way have been worked before it.

In the first west way on No. 2 plane there is an adaptation of the tail rope which is worthy of notice. The gradient of this way is found heavy enough to cause the outcoming full tubs to pull the tail rope after them. In taking the empty set inbye the main rope is knocked off at the point R, and the set is pulled in by the tail rope; the full set is afterwards let down the incline by the single tail rope to R, at which point the main rope, which is necessary to pull the set on to the kep, is attached. The drum man sometimes brings the set out of this way by the brake whilst the engine is working another way. The gradient on the second west way is not heavy enough to allow this method to be adopted.

On the No. 1 plane there are two stations by the side of the main way, to which sets are taken several times during the day. One of these stations is in the cross-cut way and the other is in the second south way. When a set is intended for the station in the latter way, it is taken to L L, Fig. 3898, and there the ropes are knocked off; the full set stands at M M, and in order to get the ropes to this point, a piece of rope, the length of the set, is attached to the two ends, which are then pulled by the engine opposite to the ends of the full set. Thus eight connections and disconnections are necessary for each set led from this station.

3898.

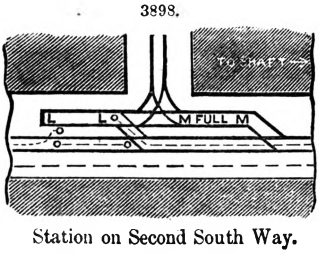

Station on Second South Way.

3899.

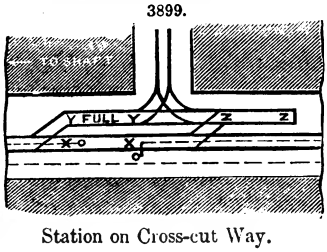

Station on Cross-cut Way.

The arrangement of the station on the cross-cut way, which was made some time after the station just described, is much better. Here, Fig. 3899, the way from X to Z is made to dip gently inbye, and when the empty

set is brought inbye both rope ends are knocked off at X X, and the set runs forward by itself to Z Z; the ropes are then connected to the full set standing at Y Y.

3900.

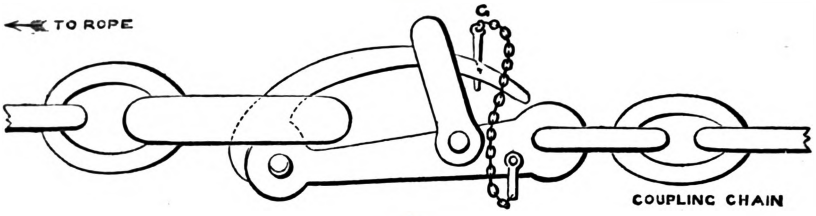

The ropes are connected to the set by means of the link, Fig. 3900. The fastening is secured by a cotter, C.

Duration of Ropes.—It is not known how long the ropes last, as a rope is first a main and then a tail rope, and is afterwards used as a tail rope on a lighter plane. The general duration of the rope is supposed to be from two to three years.

Londonderry Seaham Colliery, near Sunderland.—The engine-plane at Seaham Colliery is 2904 yds. long, the average gradient being a rise towards the shaft of 1 in 64. There are two stations by the side of the main way from which coals are led.

The engine, Fig. 3901, is horizontal, and has two cylinders. The drums are 6 ft. in diameter; they are at right angles to the wagon-way, and the ropes are taken round the turn by 4-ft. sheaves. Besides the drums used for the main engine-plane, there are two others, one of which hauls the tubs from the workings in the low-main seam to the shaft, and the other is used for taking the full set down from the bankhead to the shaft. Each pair of drums is connected with the engine by a movable carriage, the single drums being put in and out of gear as required by a clutch.

There are two boilers underground, at some distance from the engine.

3901.

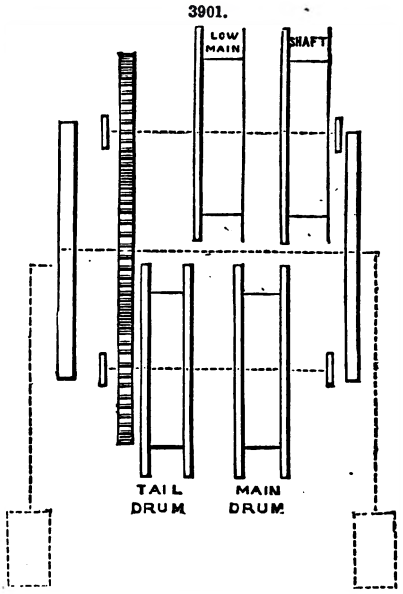

Dimensions of Engine, Boilers, and Ropes.

Engine erected 1856.

Number of cylinders		2
		ft. in.
Diameter of cylinders		0 18
Length of stroke		3 0
Diameter of piston-rod		0 2½
Length of connecting rod		8 8
		in. in.
Dimensions of steam-ports		12⅞ × 1⅜
„ exhaust „		12⅞ × 1⅞
		Steam. Exhaust.
		ft. ft.
Length of breech-pipe		6 10
„ main pipe		710 740
		in. in.
Diameter of breech-pipe		5 6¼
„ main pipe		6½ 7
		ft. in.
Diameter of driving pinion		3 0
„ followers		6 0
„ fly-wheels (2)		10 0
		Main. Tail.
		ft. in. ft. in.
Diameter of drums		6 0 6 0
„ „ including flanges		8 6 8 6
Width between flanges		1 6 1 6
Width of brake		0 4 0 4
Distance between centres of cylinders		13 6
Boilers .. Number		2
Description		Ordinary egg-ended
		ft. in.
Length over all		33 0
Diameter		5 10
Boilers .. Area of heating surface		each 220 sq. ft.
„ fire-grate		„ 20 „
		ft. in.
Receiver .. Length		10 0
Diameter		3 0
		Main. Tail.
		yds. yds.
Ropes .. Length		2900 5800
		in. in.
Circumference		2¾ 2½
		cwts. qrs. lbs. cwts. qrs. lbs.
Weight		76 3 14 138 0 0
		months. months.
General duration		8 12
Sheaves .. Number		340 340
		lbs. lbs.
Weight		26 37
		in. in.
Diameter		6½ 10¼
		ft. ft.
Distance apart		24 24
		lbs.
Return sheave, weight		1428
		ft.
„ „ diameter		8
		lbs.
Rails .. Weight a yard		18
		ft. in.
Length of each		12 0
Gauge of way		2 0

Rails laid on battens (6½ in. by 2½ in.), secured by sleepers spiked to them underneath.

Tubs, Fig 3902.—There are two sizes of tubs used indiscriminately at this pit;—

	ft.	in.	Small tub. ft.	in.
Length (inside)	3	3½	3	0
Breadth „	2	7	2	7
Depth „	2	4	2	5
Height above rails	3	7	3	5
Distance coupled	1	6	1	6
Diameter of wheel	0	12	0	10½
	lbs.		lbs.	
Average weight (empty)	616		514	
„ coal contained	1008		916	
Total number in pit	262		158	
Number required to work engine-plane ..		260		

3902.

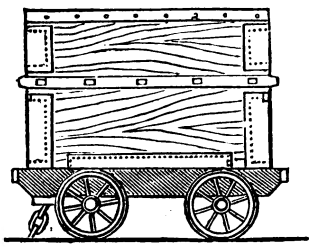

Description of Plane.—The bridge rails on the engine-plane are laid on battens. There are two short curves on the plane, Fig. 3903, one of which is 7 chains radius. The gradient is a general dip inbye, the heaviest gradient being 1 in 23.

3903.

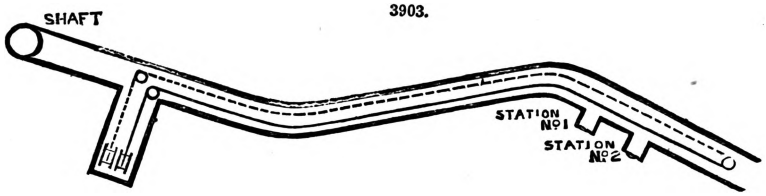

At each station there are two sidings, with a main way between; the tubs are taken into the branch ways over the main way by movable rails.

The sheaves for the main and tail rope are placed 24 ft apart; the tail sheaves are all set between upright battens, about 3 ft. from the ground.

Description of Method of Working Plane.—The full set, generally consisting of 65 tubs, is drawn outbye from the station to which the empty set was last taken, by the main rope, the tail rope being attached to the other end of the set; when it has reached the kep at the bankhead, these ropes are knocked off, and the set is run down an incline a distance of 450 yds. to the shaft by a separate rope, which draws the empty set up to the bankhead; the tail-rope drum is then put into gear, and the empty set is drawn inbye by the tail rope.

The rope is attached to the fore end of the set by an ordinary hook, but at the other end, the application shown below is used when the set is coming outbye, to prevent the set running amain should the main rope happen to break. The iron cow A B, Fig. 3904, is secured to the bar at B by a pin C D, which hangs over the top of the tub; the short chain on the arm of the cow is hooked on to the main chain at E; when this chain is tightened, the pressure upon the short chain raises the cow, and prevents it from striking the rollers. If the main rope should break, the chain attached to the tail rope slackens, and the cow falls and keeps the set from running back.

3904.

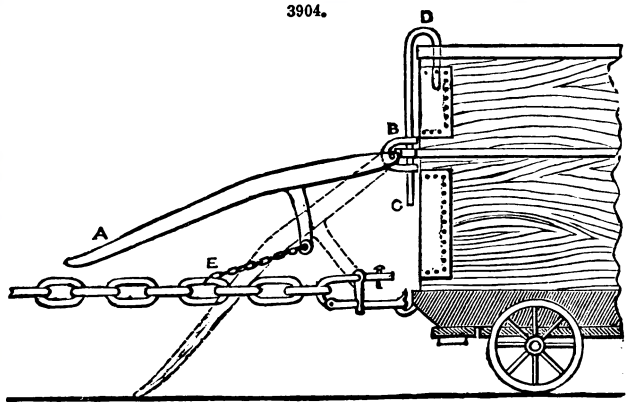

Experiments with Dynamometer.—Before any experiments were made with the *dynamometer*, it was tested by placing it in a hanging position, and attaching various weights to it. The readings were found to agree with the weights applied. The dynamometer experiments are, in the opinion of the committee, unsatisfactory; and the comparisons which have been attempted to reconcile the results, have not yet afforded sufficient data for the committee to draw any reliable conclusions. The committee, therefore, feeling that this subject requires considerably more attention, hope that some member of the Institute will take it up where they have left it. The committee record the observations only, and the mode in which they were taken.

The experiments with this instrument show the traction, in cwts., required to overcome the resistance of the load upon the engine-plane, the readings being taken at the particular points indicated.

In the experiments at Seaham Colliery the *dynamometer* was applied as shown in Figs. 3905, 3906.

The plank A is prolonged on one side to act as a buffer, to prevent too much slackening of the instrument.

B is an iron crook fixed to an empty tub and made to fit the underside of the dynamometer to support it when slack. After a few trials it was found practicable to work without the crook—the strain keeping the instrument in its proper position.

3905.

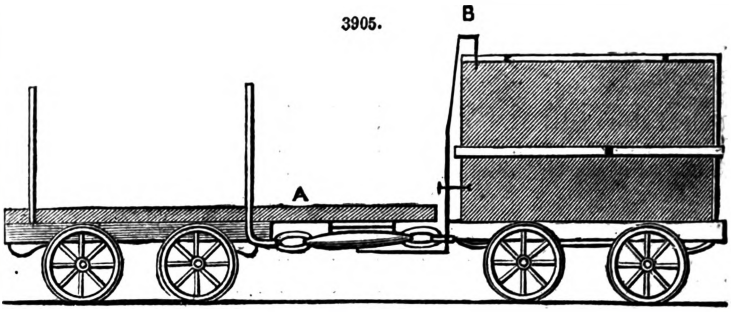

Side view.

3906.

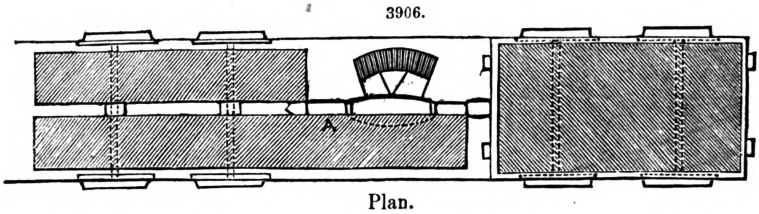

Plan.

The observer, lying on the tram, watched the needle continually, and noted down the readings at the points at which indicator diagrams were taken. See DYNAMOMETER CAR.

Seaton Delaval Colliery.—The engine-plane at Seaton Delaval Colliery is 2059 yds. in length, and is nearly level, having an average gradient of 1 in 643, dipping outbye. All the coals are led from

3907.

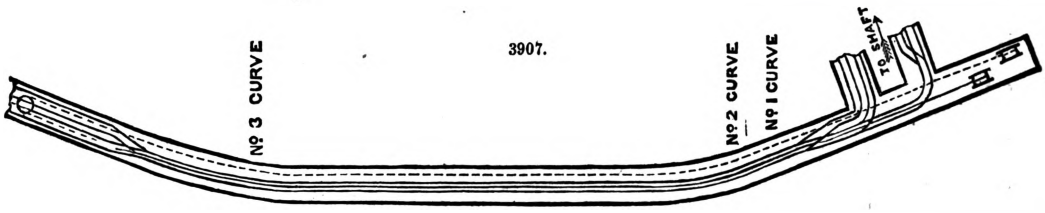

the inbye end of the plane, there being no intermediate stations, Fig. 3907.

The engine, Fig. 3908, by which the plane is worked, is a single-cylinder horizontal engine, and the main and tail drums are on different shafts; the pinion and spur-wheels are of the same size, and thus the drum makes one revolution for each stroke of the engine. The diameter of the cylinder is 28 in., the length of the stroke 6 ft., and the diameter of the drums 6 ft., the main-rope drum being covered with a coating of hemp rope, making it 6 ft. 2 in. The ropes have a direct lead from the drums to the commencement of the plane, the distance from the engine to the point from which the set starts being 231 yds. The engine, during the day, hauls the coal and pumps water into the boilers, and at night pumps into the boilers. There are four boilers close to the engine, only three of which are in use at the same time.

3908.

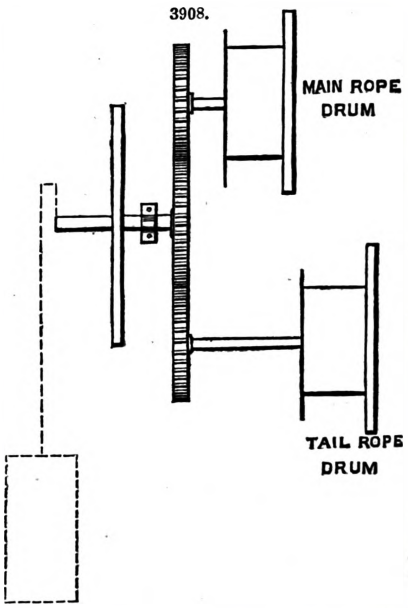

This plane has been worked by engine-power rather more than twenty years. About 480 tons a day are now led, whilst formerly as many as 1300 tons have been led in one day—the average quantity being then 1100 tons a day.

The main rope originally was 3½ in., and the tail rope 3 in. in circumference; the ropes are generally replaced by pieces, and as they are not particular about always using the 3½-in. rope for main rope, the quantity of this rope is constantly varying; at present there is only 1400 yds. of it upon this plane.

DIMENSIONS OF ENGINE, BOILERS, AND ROPES.

Diameter of cylinder	ft. 2	in. 4
Length of stroke	6	0
Diameter of piston-rod (passes through cylinder)	0	$5\frac{5}{8}$
Length of connecting rod	11	1
		in.
Dimensions of steam-ports		$2\frac{1}{8} \times 12$
„ „ exhaust „		$3\frac{1}{4} \times 12$
	Steam. ft.	Exhaust. ft.
Length of main pipe	93	100
	in.	in.
Diameter of main pipe	$7\frac{1}{4}$	7
	ft.	in.
Diameter of driving pinion	6	0
„ „ followers	6	0
„ „ fly-wheel (1)	15	0
	Main. ft. in.	Tail. ft. in.
Diameter of drums	6 2	6 0
„ „ including flanges	11 0	11 0
Width between flanges	3 6	3 6
Width of brake	0 5	0 5

Cylinders, boilers, and pipes not covered.

Boilers ..	Number	4, 3 in use
	Description	Ordinary egg-ended
	Area of heating surface	each 108 sq. ft.
	Area of fire-grate	22·5 „

Boilers ..	Length over all	ft. in. 2 at 30 0		ft. in. 2 at 25 0	
	Diameter	2 „ 5 6		2 „ 6 0	
	Water evaporated in 12 hours	1578 cub. ft.			
		Main. yds.		Tail. yds.	
Ropes, or Chains	Length	2232		4491	
		in.		in.	
	Circumference	$3\frac{1}{2}$		3	
		cwts. qrs. lbs.		cwts. qrs. lbs.	
	Weight	233 0 23		336 0 2	
		months.		months.	
	General duration	24		24	
Sheaves ..	Number	146 37 50		142 31 60	
	Weight per sheave	lbs. lbs. lbs. 39 26 40		lbs. lbs. lbs. 39 26 40	
		inches.		inches.	
	Diameter	6 6 9		6 6 9	
		ft.		ft.	
	Distance apart	24		24	
			in.		in.
	Extra sheaves at curves, &c.	29 at 10		24 at 6 17 „ 10	
					lbs.
	Return sheave, weight				952
					ft. in.
	„ „ diameter				7 0

Description of Plane.—The plane is laid with broad-topped rails, in 15-ft. lengths, weighing 20 lbs. a yard. The way is laid on chairs 3 ft. apart, and the gauge of the way is 2 ft. 4 in. There are three slight curves on the plane, all turning in the same direction; the radius of No. 1 curve is 10 chains; No. 2, 10 chains; and No. 3, 12 chains. Nos. 1 and 2 curves are close together The ropes are carried round the curves by bell-sheaves 10 in. in diameter. The usual distance of the rollers apart is 24 ft., but this is not always observed; there are three descriptions of rollers used, the 6-in. rollers being most common both for the main and tail rope.

The ropes run off and on to the drums on the upper side, and are carried near the roof to the station. The tail wheel inbye is also placed near the roof, and the ropes are raised to it by sheaves.

This plane is worked in very much the same way as the majority of tail-rope planes in this district, but instead of having the usual kep for the full tubs to run down upon to the shaft, the way is laid level, and the coals are led from the station to the shaft by horses. On the end of both main and tail ropes there are fixed about 15 yds. of chain, with two or three large links inserted at various distances apart, and one of these links is attached by an iron pin to the loop of the centre bar of each end tub of the set, according to the position of the set at the station. In taking the empty set of tubs inbye, the tail rope is first connected to the set, and then the main rope, and the set is drawn inbye by the tail-rope drum, the main-rope drum being out of gear, with just a slight weight hung upon the brake-lever, to prevent the drum from over-running the rope. When the set reaches the inbye station it is allowed to stop before knocking off the ropes. The full set is brought out in a similar way by the main-rope drum, the tail drum running loose on the shaft, with a light weight on the brake-lever.

Harraton Colliery, near Durham.—In the application of the tail-rope system at this colliery two branches are worked, and the average gradient is in favour of the full tubs.

The engine-plane is 1795 yds. long to the north-way terminus, and 1729 yds. to the west-way terminus. The average gradient from the north-way flat to the shaft is a dip outbye of 1 in 83.

At present about 650 tons a day are led along this plane, nearly equal quantities being led from each of the branches.

The hauling engine is vertical, and has two 20-in. cylinders. The drums are 5 ft. 2 in. diameter, and the ratio of the pinion to the spur-wheels is as 3 to 4, thus causing the drums to make one-third more revolutions than the engine.

The three boilers by which steam is supplied are on the surface, and connected with the other boilers employed on the surface. Jucke's furnaces are used for firing. The engine works both day and night, but at present is doing very little work at night. The engine-plane has been at work only five years, and the engine, rails, tubs, and so on, are in very good condition.

The lead from the engine to the terminus of the plane near the shaft is not direct, the ropes being taken by large sheaves round a right angle 27 yds. from the engine.

DIMENSIONS OF ENGINE.

Number of cylinders	2	
	ft.	in.
Diameter of cylinders	2	2
Length of stroke	3	0
Diameter of piston-rod	0	$3\frac{1}{2}$
Length of connecting rod	ft. 6	in. 0
	in.	in.
Dimensions of steam-ports	17 ×	$1\frac{3}{4}$
„ „ exhaust „	17 ×	2

DIMENSIONS OF ENGINE—*continued.*

	Steam.	Exhaust
	ft.	ft.
Length of breech-pipe	27	20
„ main pipe	570	251
	in.	in.
Diameter of breech-pipe	5	6
„ main pipe	9	7

	ft.	in.
Diameter of driving pinion	4	2
„ followers	3	2
„ fly-wheel	8	2

Description of Engine-plane.—The plane is laid with heavy-topped chair rails, weighing 22 lbs. a yard. There are two curves on this plane, both 26 yds. radius; No. 1 curve being 66 yds. long, and No. 2, 80 yds. The main rope is taken round the curves by sheaves, 4 ft. in diameter, with several 2-ft. sheaves placed close enough together to form an almost regular curve for the rope. The tail rope is taken round a 6-ft. wheel at No. 1 curve, and a wheel of 8 ft. diameter at No. 2 curve.

The return wheels are 8 ft. diameter, and are placed diagonally. The main rollers are 8 in. diameter, and the tail-rope rollers 13½ in. diameter. The large pulleys used on this plane have wrought-iron rods for spokes.

At No. 2 curve the inner rail is laid about 3 in. higher than the other. Though the set passes round this curve at the rate of ten miles an hour, no accident has ever occurred.

Description of the Method of Working the Plane.—There are 63 tubs in a set. In going inbye the set is attached to the rope by two knock-off links, and is taken to the junction A. As the set is taken nearly alternately into each of the branches, the arrangement of ropes is altered at this junction, as the ropes of the way last visited are then on the set. Suppose the set has been last in the west way, in going inbye again, when it has arrived at this junction, the tail rope at the inbye end of the set is removed, and replaced by the north-way rope; the shackle connecting the main tail rope with the west-way branch rope being held by a wooden clamp, fixed at the junction, while the end of the north-way rope is being attached to it. This shackle-joint is stopped always at the same place; and as the branch-rope end is brought to this point whilst the set is coming inbye, they are connected immediately. As this connection is made by the man attending the junction, while the connection at the end of the set is being made by the run-rider, the time taken up by the change is very short, generally not more than two minutes.

The annexed sketch, Fig. 3909, shows the position of the ropes just when the tail rope

3909.

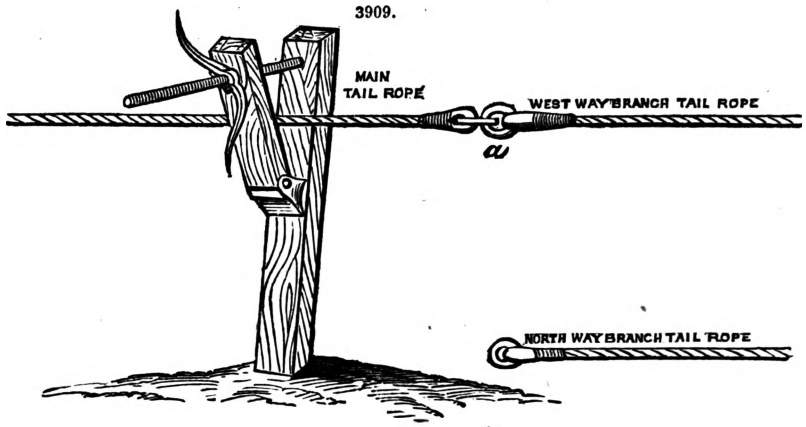

has brought the shackle-joint near to the clamp, which is then screwed up. As before described, the west-way rope is then taken off, and the north-way rope connected. When the end of the north-way rope is not just opposite to this point, it is drawn up by a winch, fixed here for the purpose.

3910.

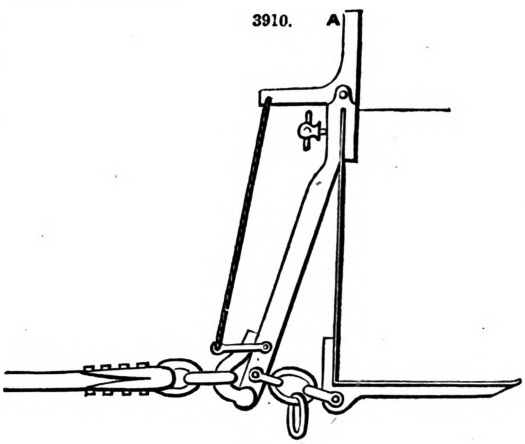

In coming *out*bye, the set (from either way) comes out to the shaft without stopping. At the fore end of the set is fixed the self-acting knock-off link, Fig. 3910. When the set arrives at the top of the kip, and most of the tubs are over the brow, a piece of iron, fixed to the roof, comes in contact with the arm A of the knock-off apparatus, and releases the main rope, which falls off to one side. The engine is then stopped, and the set is let down by the tail rope, which is still attached, till the first tub (if there are no full tubs standing) reaches the shaft. Whilst going down, spraggs are put into the tub wheels, by means of which the tubs are afterwards let down to the shaft as required.

Fig. 3911 represents the knook-off link used at the other end of the set. When the rope has to be disconnected, the cotter at C is removed, and the link L is pushed off by the foot

3911.

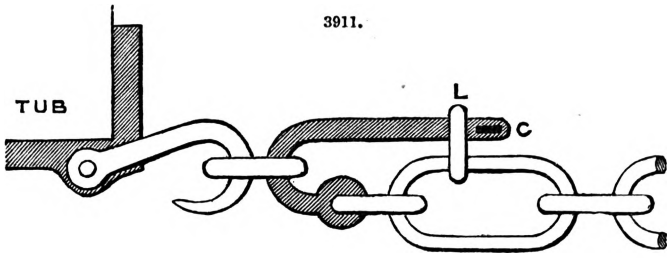

Rigg's Apparatus for Carrying and Tipping Coal, Figs. 3912 to 3917.—This invention of A. Rigg, jun., has for its object the formation of an improved apparatus for carrying and tipping coal and other minerals. The apparatus consists of a platform sustained on axles or rollers which carries the wagon or other receptacle containing substances to be upset, the centre of motion being so adjusted that when full the weight of minerals overturns the whole, and when empty returns to the original position, unless restrained. Towards that portion of the wagon which descends lowest in overturning is fixed a plate or riddle, movable with the machine and attached to it at any angle, either curved or straight.

For the larger sizes of machines the inventor prefers steam-brakes, which possess a cylinder closed at both ends; a large passage communicates steam to the upper or impelling side, and a smaller opening supplies the lower or retreating side, and to this side is connected a large escape tap or valve to be regulated at will, or the inlet to the lower side may be made to reduce as the exhaust or escape valve opens. Any extent of pressure may be obtained by enlarging the escape, while the inlet to the upper side remains unaltered, and the brake may be thrown out of action by closing the exhaust-valve. This form of brake is also applicable to steam-engines or other machinery.

Figs. 3912, 3913, represent end and side elevations of one modification of this tipping machine for loading wagons and ships; it is easily perceived that the principle admits of variation to suit any size or description of wagon, whether with end doors opening or not.

By reference to the Figures above mentioned it will be seen that the apparatus consists mainly of a platform A, carrying a shoot B at one end, which shoot may be horizontal, as shown in Figs. 3912 to 3917, for railway trucks open at the ends, or vertical for smaller wagons with closed ends, or it may be at any desired angle, or the shoot may be replaced entirely or in part by a screen or curved plate. The platform A is so balanced that it remains in the position shown, and returns to it even when carrying an empty railway wagon. This platform is supported on two axles C, C, and upon a segment wheel D, which has teeth gearing into those of a pinion E on the brake-shaft F. The brake-wheel G is fixed on such shaft, and is regulated by a brake H, where steam or other elastic medium is available. A hand-wheel J or other regulator placed in some convenient situation, determines when the brake shall be brought into operation or thrown out of use. On a loaded wagon being placed on the platform, a powerful tendency to overturn is at once manifested, but such tendency is checked and controlled by the brake, for it will be observed that the centre of gravity of the coal or other mineral is considerably in advance of the centre of motion of the tipping machinery. On the end door of the wagon being opened, and the tipping movement allowed to continue, the minerals or materials slide easily down the shoot into the boat or other depository. It is necessary that a greater inclination should be given to the part of the shoot next the wagon, in order to remove all the coal, than is proper for the outer end of the shoot, for which reason the curved portion at the end is applied, which comes into action and checks what might otherwise prove a damaging velocity. The dotted lines explain the movements just described.

3912.

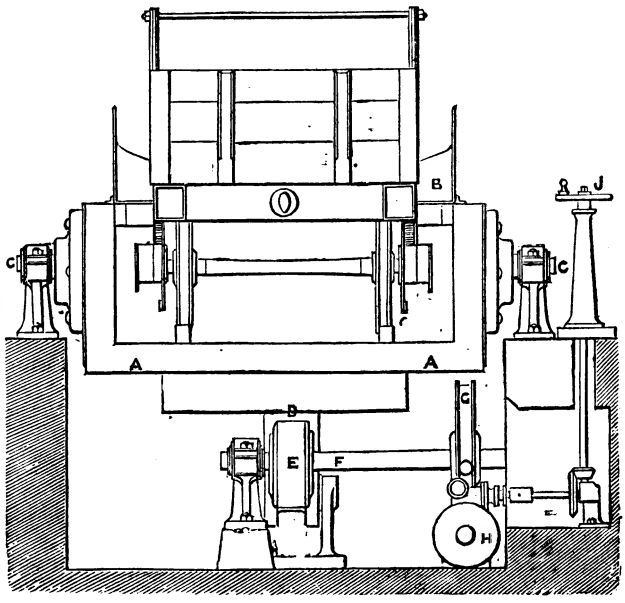

After the delivery of the coals or minerals, the apparatus returns into its horizontal position, such return being regulated in its speed by the brake.

Figs. 3914, 3915, represent on a larger scale the brake H above mentioned. From the side elevation and section, Figs. 3914, 3915, it will be seen that the apparatus consists of a cylinder H with piston K, similar to that of a steam-engine, and it is preferred to make the piston-rod of larger diameter than is usual for a steam-engine, partly for security. A constant communication exists between the boiler and the upper side of the piston, and also between the boiler and the valve-chest. In this valve-chest one passage leads to the lower side of the piston, and the other to the exhaust.

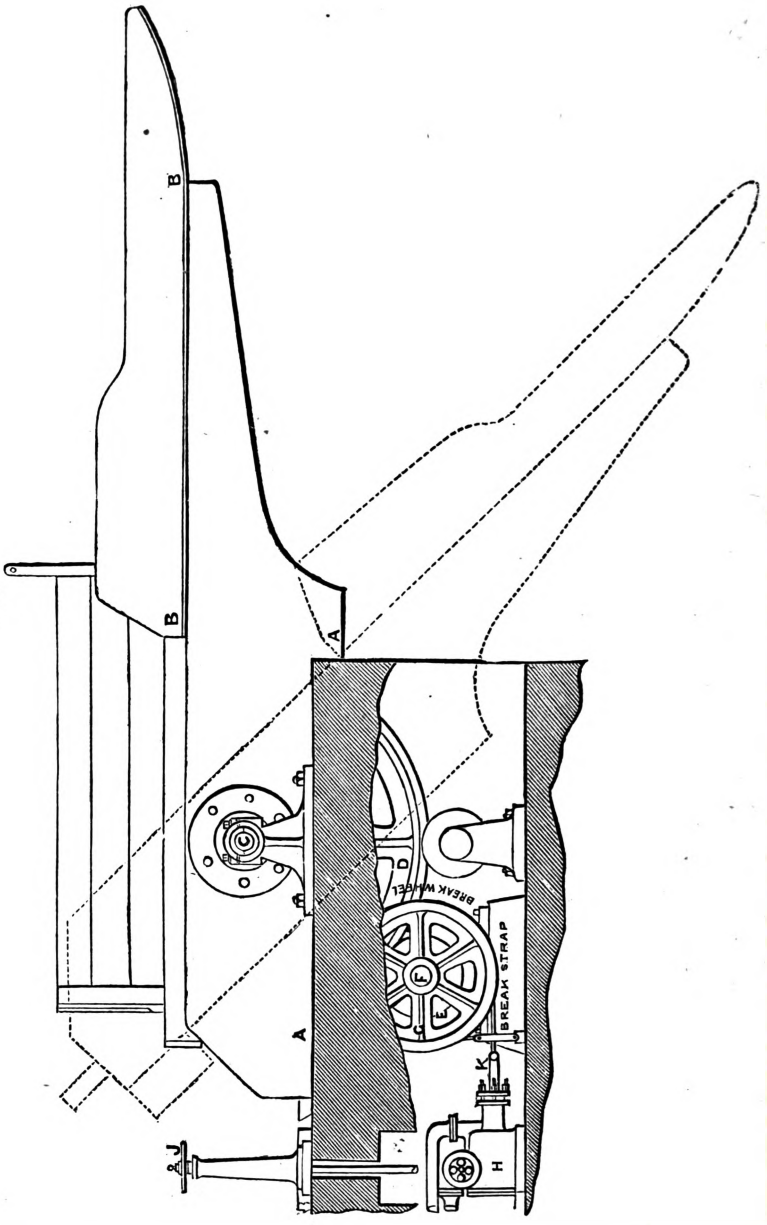

3913.

The valve is shown in Figs. 3915 to 3917, and is arranged to cover both ports. Figs. 3916, 3917, show side and end elevations of the valve, which has a passage (1) completely through it corresponding to steam-port at the lower end of the cylinder, and a recess (2) which is arranged to cover the exhaust and steam ports when necessary; while the opening (1) in the valve corresponds to the port leading to the lower side of cylinder, an equal pressure is maintained on both sides of the piston, except what is due to the diameter of piston-rod, which difference always keeps the brake-band slack when out of action. When the valve is turned so that the recess (2) in the valve covers both the steam and exhaust ports, an escape of steam will take place, which, by reducing the pressure on the lower side of the piston, whilst the pressure at the upper surface of the piston remains in full force, causes the brake to come into action with a force depending on the rapidity of the escape of steam allowed. The brake will be put out of action by turning the valve, so as to allow a free flow of steam again into the lower end of the cylinder. By making the partition in the valve somewhat narrower than the opening of the port, steam can be partially admitted while some escapes, thus giving a greater range of pressures, and maintaining as long as required the necessary force.

Murton Colliery, County of Durham.—There are no branches worked by the tail rope at this colliery; but there is a station (Hallfield station) by the side of the main way, from which part of the coals are led.

The length of plane the coals are led over from the south-east or far-off landing is 2770 yds., and 1978 yds. from the Hallfield station, the distance from the engine to the tail wheel being 2816 yds.

The hauling engine is a double 18-in. cylinder horizontal engine, with 2-ft. stroke. The main and tail drums are 5 ft. in diameter, and on the second motion the revolutions of the pinion-wheel

to the spur driving the main drum being as 2·387 to 1, and as 1·581 to 1 to the spur-wheel driving the tail drum. The drums are put in and out of gear by shifting carriages.

3914.

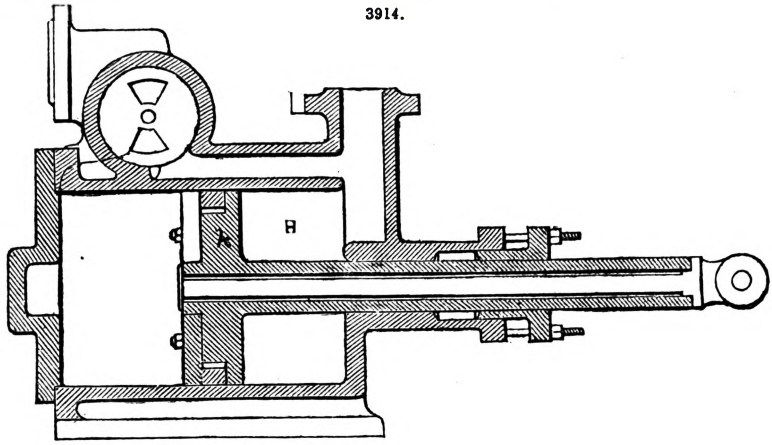

3915.

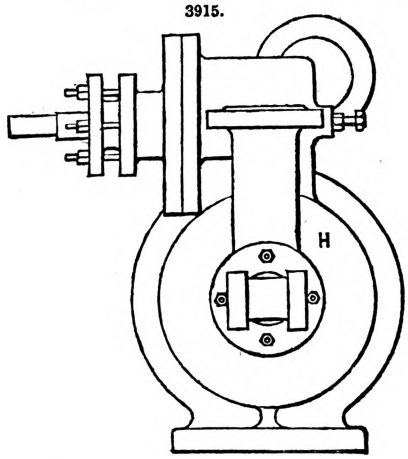

3916.

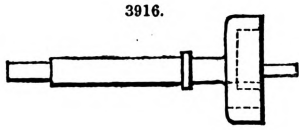

3917.

Dimensions of Tubs, Figs. 3918, 3919.—Length inside, 3 ft. 9 in.; breadth at top, 3 ft.; breadth at bottom, 2 ft. 1 in.; depth, 2 ft. 4½ in.; height above rails, 3 ft. 5 in.; distance coupled, 1 ft. 6 in.;

3918.

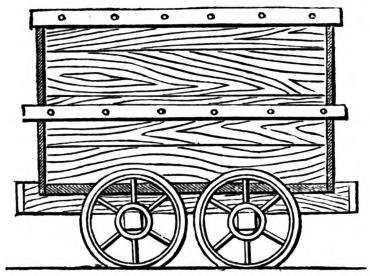

3919.

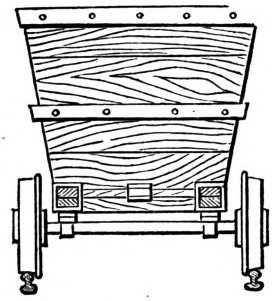

diameter of wheels, 1 ft. 2 in. Total number in pit, 450. Number required to work engine-plane, 288.

Description of Engine-plane.—The plane is laid with chair rails, in 12-ft. lengths, weighing 24 lbs. a yard; the gauge of the way is 2 ft. 8 in. The tub used has wheels 14 in. in diameter, and carries about 10 cwt. of coals.

There are two curves on the plane. No. 1 curve has a radius of 154 yds., and No. 2 a radius of 42 yds. The average gradient of the plane is 1 in 83 rise outbye, and the heaviest gradient is 1 in 25; part of the plane is level, but no part of it dips towards the shaft. The rollers and sheaves used for carrying the rope are for the most part 6 in. in diameter. The main rope is taken round No. 2 curve by drum-sheaves, 2 ft. in diameter, and the tail rope by ordinary 2-ft. sheaves.

At the Hallfield landing there is a pair of switches leading on to a double line of rails, for full and empty tubs.

The lead for the ropes from the drums to the engine-plane is direct. The main rope is 2¾ in. in circumference when new, and the tail rope 2½ in.

Near to the Hallfield landing there is a three-cranked single-action force-pump, worked by the tail rope by means of three friction-wheels placed as shown in Fig. 3920.

3920.

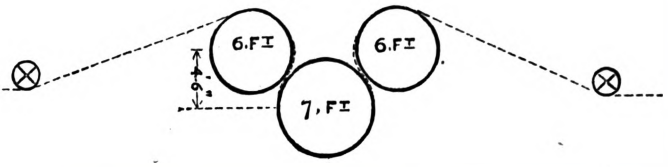

A similar pump is worked by the tail wheel. It is difficult to arrive at the share the pumps have in the wear and tear of the ropes, but it is estimated in the account of cost of maintenance at one-third of the whole cost; that is, were the pumps and the wheels necessary to drive them done away with, the tail rope, instead of lasting six months, as at present, might be worked for nine months.

Description of Method of Working the Plane.—There are forty-eight tubs in a set of full or empty tubs. No run-rider is employed. The main rope is attached to the set by fastening the shackle, which is on the end of the chain, to the coupling chain of the end tub, with a pin, which is secured by a spring cotter, Fig. 3921; and the tail rope is attached by placing the end link of the chain in the centre bar, securing it by the pin, which is a fixture on the end of the tub, Fig. 3922.

3921.

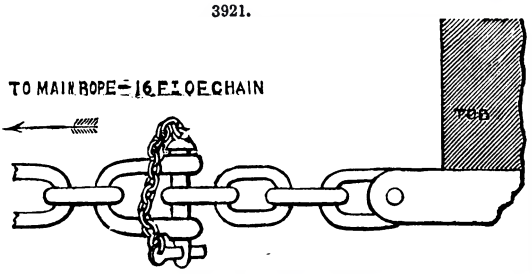

Fastening at the Main-rope end.

3922.

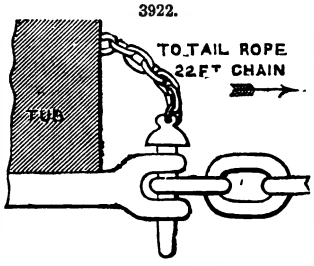

Fastening at the Tail-rope end.

In going inbye, when the ropes are attached to the set, the station boy raps to the brakesman, and the set is started. The set is always stopped at the Hallfield landing, till a rap is given from there telling the brakesman into which way he has to go; if for the Hallfield way, the switches are opened, and the set passes on to the empty siding. When the ropes are disconnected, the set runs a short distance along the siding, in order to allow the ropes to be attached to the full set. When the set goes into the south-east way, no rap is given on the set reaching the flat, as the brakesman knows from the position of the rope upon the drum when to stop the engine. The full set is generally standing as nearly as possible opposite to the point to which the empty set runs. Should the set, however, here, or at either of the other stations, not be conveniently situated for the ropes, a lengthening chain (several of which are kept in readiness) is put on, and it is thus very seldom necessary to move the ropes.

In coming outbye, when the set arrives at the bankhead, the station boy raps to the engineman (by a rapper distinct from the main rapper), and the full set is stopped opposite the empty set, part or all of which is generally standing ready to go inbye. When the set stops, the pin fastening the main rope to the set is usually very tight, and has to be drawn out by a lever kept for the purpose. This method of attaching is not so convenient as the slip-link fastening, by which the rope can be easily disconnected by the foot.

From the bankhead the coals are taken about half-way to the shaft by a tail rope; the tail rope is then knocked off, and the set runs to the shaft, dragging the main rope after it. The main rope afterwards draws the empty set up. The cog-wheel for driving the small drums required for this work is under the pinion-wheel of the engine, and can be put in and out of gear whilst the engine is working the main engine-plane, by reducing the speed of the engine for a short time.

Experiments with Dynamometer.—The dynamometer was tried only upon the main ginney road, Nos. 1 and 2 ginney roads being too low to admit of its being used with safety. It was first brought in on the empty-tub way, and then taken out on the full way. Three other experiments were also made to find the tractive power required to work the main road, and the two branches working separately; these were made in the first 248 yds. from the station, rising 1 in 17, and the readings were noted at three different places on the bank. The dynamometer was attached to the

3923

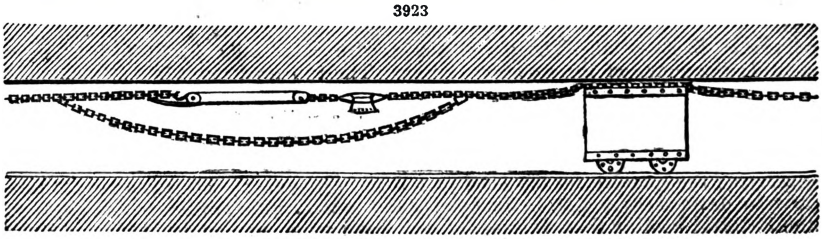

chain, as shown in Fig. 3923, by coupling chains on one side, and blocks on the other; the blocks were then drawn up, and the main chain made slack.

ABSTRACT OF EXPERIMENTS WITH INDICATOR

Series.	Description of Work.	Steam Lbs.				Speed of Piston.		Actual Horse-power.
		Gauge on Boiler.	Indicator.			Strokes a min.	Feet a min.	
			Steam.	Back.	Effective.			
A	Engine going full work, both winding and ginney chains going in shaft, and Nos. 1 and 2 ginneys underground ..	32¼	24·1	7·8	16·3	60	240	29·11
B	No. 1 ginney going alone	33½	22·6	5·6	17·0	60	240	30·36
C	No. 2 ginney going alone	34	23·11	6·05	17·06	60	240	30·47
D	Nos. 1 and 2 ginneys not working, and both chains going in shaft; winding full tubs	32	22·8	6·0	16·8	60	240	30 00
E	Nos. 1 and 2 ginneys not working, and both chains going in shaft; winding empty tubs	32	3·8	1·6	2·2	60	240	3·93
F	Winding chain going alone in shaft, winding empty tubs; all ginney chains being out of gear	32½	3·5	1 6	1·9	60	240	3·39

Power required to work the engine, together with the winding chain working empty tubs in the shaft, all the endless chain being out of gear, and the chain in the shaft being disconnected from driving wheel by blocks, as shown in Fig. 3924 (F); at 60 strokes a minute, 3·39 horse-power.

Power required to work the engine, together with the winding chain, and the hauling endless chain in the shaft, and underground to the pulley, all other underground chains being out of gear, see E tabulated form; at 60 strokes a minute, 3·93 horse-power.

∴ Power required to convey the endless chain down a shaft 75 ft. deep, and underground for a distance of 27 yds.;—

	Both chains.		Winding chains alone.		Horse-power.
At 60 strokes a minute	3·93	—	3·39	=	0·54

3924.

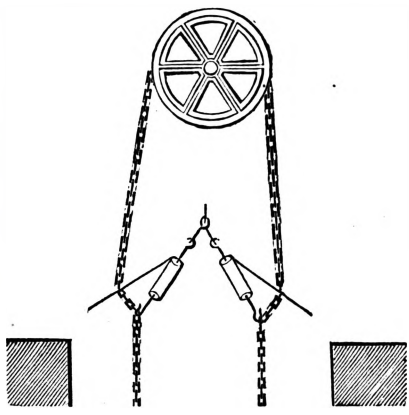

CALCULATION OF FRICTION OF CHAIN IN SHAFT.

	cwt.
Moving weight.—Pulleys, 2 at 4 cwt.	8
„ 2 at 1 cwt.	2
„ for tightening chain at bottom	1
Suspended weight (W on section)	8
	— 19
Chain.—The two sides of the chain in the shaft counterbalance each other, so that only the horizontal chain is to be considered; 27 yds. × 2 = 54 × 16 lbs. a yard	7 7
	26·7

Speed of chain in shaft, 156 ft. a minute. Then $\frac{\text{h. p. } 54 \times 33000}{112 \times 156 \text{ ft. a minute}} = 1\ 02$ cwt.

Then total friction $= \frac{1 \cdot 02}{26 \cdot 7} = \frac{1}{25}$ of total weight of horizontal chain, pulleys, &c.

Power required to work engine and wind coals, and to drive all the endless-chain roads underground, the average gradient of which is a fall outbye of 1 in 20 (A); at 60 strokes a minute, 29·11 horse-power.

Power required to work engine, wind coals, and to drive No. 1 ginney road only (B); at 60 strokes a minute, 30·30 horse-power.

Power required to work engine, wind coals, and to drive No. 2 ginney road only (C); at 60 strokes a minute, 30·47 horse-power.

It would appear from the three experiments above, that it requires less power to work both ginney roads together, than when going separately. The power required for winding coals by this system is shown by this experiment to be

$$30 \cdot 00 - \overset{\text{Engine, &c.}}{3 \cdot 39} = 26 \cdot 61 \text{ horse-power,}$$

to wind 417 tons 75 fas., a day of 8½ hours.

Power required to work engine and wind coals—the hauling chain in the shaft being also in motion, but all the underground ginney roads being out of gear (D); at 60 strokes a minute, 30·00 horse-power.

From this it will be seen that the working of the underground ginney roads assists the winding of the coals to the extent of 30·00 − 29·11 = ·89 horse-power.

Endless-rope System.—The method of conveying coals by this system of applying the endless rope has hitherto been very rarely adopted. It is chiefly in operation in the Midland Counties. The following planes have been reported on, but experiments have been made at the first only:—

I.—Shireoaks Colliery, Nottinghamshire—Underground plane in a straight line, and rising towards the shaft.

II.—California Pit, Wigan—Three underground planes, branching from the pit, and worked by one engine; a short curve on one of the planes.

Varieties of the No. 1 endless-rope system are in operation at the following collieries;—

III.—Newsham Colliery, Northumberland—Straight undulating plane, with no branches.

IV.—Eston Mines, Yorkshire—A short rope working three branches from a main line.

V. Cinderhill Colliery, Nottinghamshire—Level plane, with no branches; endless rope worked at slow speed.

This system is a modification of the tail-rope system. The following are a few of its chief characteristics;—

1. The rope, as the name implies, is endless.

2. To give motion to the rope a single wheel is used, and friction for driving the rope is supplied either by clip-pulleys, as at Shireoaks, Newsham, and Eston, or by taking the rope over several wheels, as at the Cinderhill and California Pits.

3. As only one driving wheel is used, the rope has to be kept constantly tight; this is effected by passing it round a pulley fixed upon a tram, to which a hanging weight is attached.

4. Either one or two lines of rails are used; when a single line is adopted, as at Newsham, the rope works backwards and forwards, only one part of it being on the wagon-way, and the other running by the side of the way; when two lines are used, as at Shireoaks, Cinderhill, and the California Pit, the rope moves always in one direction, and the full tubs come out on one line, the empties going in on the other.

5. The set of tubs is connected to the rope either by means of a clamp, or by sockets in the rope, to which the set is attached by a short chain. The former method is in use at Shireoaks, Cinderhill, and the California Pit, whilst the latter is adopted at Newsham and Eston Mines.

6. The working of curves and branches has hitherto been scarcely attempted by this system. At California Pit there is a slight curve on one of the ways, which works well.

The various methods of applying this system are described in the following Reports of the planes visited.

Shireoaks Colliery, Nottinghamshire.—The No. 1 endless-rope system has been in operation at Shireoaks Colliery for about four years. The engine by which the rope is worked is a double horizontal engine, with two 12½-in. cylinders. The boiler is single tubular, with Galloway's cross tubes, and is placed underground at a very short distance from the engine.

DIMENSIONS OF ENGINE, BOILER, AND ROPES.

Engine erected 1856.		
Number of cylinders		2
		ft. in.
Diameter of cylinders		0 12⅛
Length of stroke		2 0
Diameter of piston-rod		0 1 9/16
Length of connecting rod		5 10
	Steam.	Exhaust.
	ft.	ft.
Length of breech-pipe	0	1½
„ main pipe	62	64
	in.	in.
Diameter of breech-pipe	0	5¾
„ main pipe	4	4½
	ft.	in.
Diameter of driving pinion (friction gear)	2	8
„ followers	4	0
„ fly-wheel	None	
„ clip-wheel	4	0
Distance between centres of cylinders	2	5
Boiler .. Number	1	
Description—Single tubular, with 3 Galloway's tubes.		
Area of heating surface, 494 sq. ft.		
		ft.
„ fire-grate		19
Boiler .. Length over all		ft. in. 25 0
Diameter		6 0
		ft. ft. ft.
Hot-water tank (through which exhaust passes)		9 × 6 × 4
Rope .. Length		yds. 1590
		in.
Circumference		2⅛
		cwts. qrs. lbs.
Weight		25 2 21
		months.
General duration		18
Sheaves (wood) Number (53 on each way)		106
		lbs.
Weight a sheave		14
		in. in.
Diameter		5 × 16
		ft.
Distance apart		45
		lbs.
Rails .. Weight a yard		18
		ft.
Length of each		12
No. of lines		4
		ft.
Gauge of way		2
General condition		Good

DIMENSIONS OF TUBS.

	ft.	in.
Length inside	3	8
Breadth	3	0
Depth	1	5
Height above rails	2	4½
Distance coupled	1	4¼
Diameter of wheels	0	7⅛

Total number in pit 450
Number required to work endless-rope plane 256
Work done, 320 tons a day of 11 hours (1 hour allowed for meals).

Description of Engine-plane.—The engine-plane is laid with a double way; the empty sets going in on one side, and the full sets coming out on the other. It was originally intended to have sets coming out and going in at the same time, but the limited quantity of coals now being drawn renders this unnecessary. The plane worked by the endless rope is 750 yds. long, with an average rise towards the shaft of 1 in 48; the heaviest gradient being 1 in 29. The same engine also draws coals along a single-rope plane, 737 yds. long, the average rise of which, towards the shaft, is 1 in 15. One of Fowler's clip-pulleys, 4 ft. in diameter, is used, to give motion to the endless rope. The wheel is in a horizontal position, and is connected by mitre-gearing to the friction-gearing by which it is worked. The pinion friction-wheel is 2 ft. 8 in. in diameter, and drives two spur-wheels of 4 ft. diameter, one for the clip-pulley and the other for the single-rope drum. The friction-gearing is found to answer exceedingly well, and is very convenient for putting out of gear, a movement of ¼ in. being sufficient to disconnect the wheels; this is effected by the shafts of the spur-wheels being placed in eccentrics.

As it was found desirable, in the adoption of the clip-wheel, to cause the rope to pass round as large a circumference of the wheel as possible, in order to get as much of the grasping effect of the clips as practicable, the ropes at a short distance from the clip-wheel are crossed, as shown in Fig. 3925

3925.

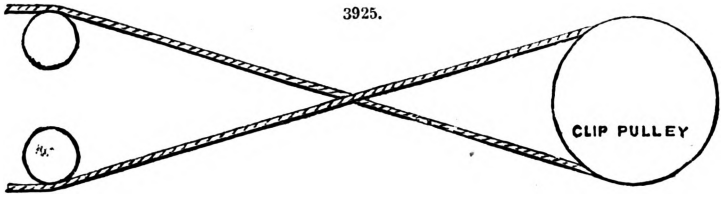

In working the endless rope by the clip-pulley, it is necessary to keep it very tight, as otherwise it is apt to slip out of the clips; this is effected by having the wheel inbye placed on a carriage moving on wheels, and tightened by a chain, passing down a small staple, as shown in Fig. 3926, to which a weight of about 15 cwt. is suspended. The weight descends as the rope stretches, and thus constantly keeps the rope at the same tension.

3926.

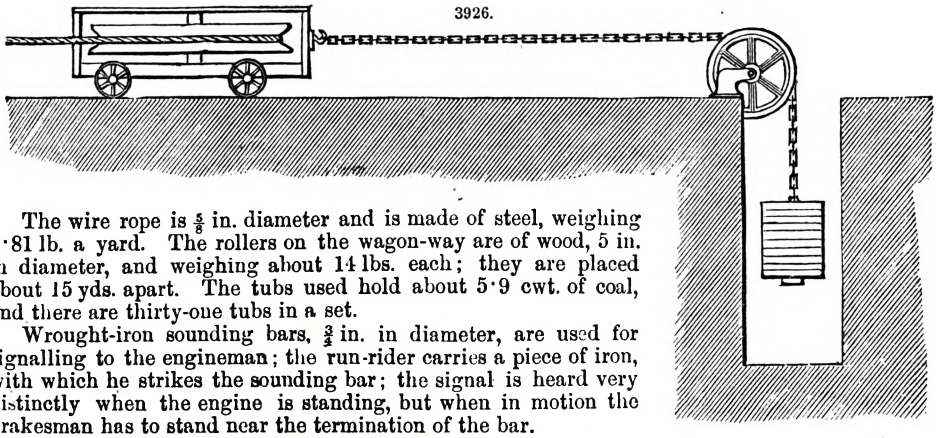

The wire rope is ⅝ in. diameter and is made of steel, weighing 1·81 lb. a yard. The rollers on the wagon-way are of wood, 5 in. in diameter, and weighing about 14 lbs. each; they are placed about 15 yds. apart. The tubs used hold about 5·9 cwt. of coal, and there are thirty-one tubs in a set.

Wrought-iron sounding bars, ¾ in. in diameter, are used for signalling to the engineman; the run-rider carries a piece of iron, with which he strikes the sounding bar; the signal is heard very distinctly when the engine is standing, but when in motion the brakesman has to stand near the termination of the bar.

Description of the Method of Working the Engine-plane by the No. 1 Endless-rope System.—The rope in passing from the clip-pulley on the outbye end, and to the tail wheel at the inbye end, goes under the rolley-way for about 80 yds.; the tubs can thus pass over the rope in coming from the shaft, Fig. 3927.

In taking the set inbye, the tubs are coupled together at the bankhead, and the run-rider, who rides in the first tub at the front end of the set, first hooks the chain affixed to the clamp on to the iron loop at the end of the centre bar of the tub, and then fixes the clamp upon the rope, which is always upon the middle of the way; this clamp is closed by a handle-lever, passing over the curved end, and by the insertion of an iron pin is kept firmly fixed without the pressure of the hand. The clamp has such a strong hold upon the rope, that in a case of the set being stopped by some obstruction, the rope has been found to break rather than slip through the clamp.

The clamp having been fixed to the rope, the run-rider strikes the sounding bar, and the rope moves forward, the man pressing upon the handles of the clamp to keep it perpendicular, and the

tubs being pulled forward by the chain on the clamp. The set at the start is about 45 yds. from the engine, and is on a gradient of 1 in 520 fall; the next or middle gradient is 1 in 47. As the set is found to overrun the clamps in going inbye at this latter gradient, six spraggs are placed in the wheels of the tubs at the end of the set, to prevent the tubs getting together and becoming uncoupled. At a distance of 364 yds. from the engine, and about the middle of the 1 in 47 gradient, the clamp is taken off the rope whilst in motion, and the set runs forward by itself. When the clamp is disconnected, the run-rider raps to the engine—though the running away of the rope when disconnected is sufficient to let the brakesman know—and the rope is stopped, the engine then being free to work the single-rope way.

3927.

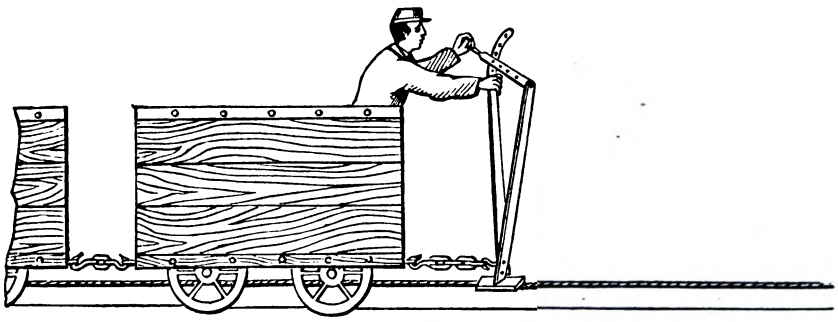

There are two stations from which coal is being drawn at present; the first being 640, and the second about 795 yds. from the engine. When the gang or set has to go to No. 15, or the first station, the points are placed for this, and the set, then disconnected from the rope, runs round the curve into the station; the rope at this curve passes under the rolley-way, so that with this arrangement the clamps could not pass this point. When the set is intended for the far-off station, or No. 13, it runs by itself from the knock-off point, the spraggs being taken out, when necessary, by a boy, who rides with the set for the purpose.

In coming outbye, the clamp is also placed at the front end of the full set, which is pulled out to within 140 yds. of the engine, when the clamp is removed, and the tubs run forward to a point from which they are taken to the shaft by horses. The expressions *outbye* and *inbye*, which occur frequently in this Report, are terms used in the North of England; the former to denote the end of the engine-plane nearest to the shaft, and the latter the end nearest to the workings of the mine.

When bringing the full tubs out, the strain of the full set upon the clamp chain raises the rope a little and prevents the clamp from striking the rollers; but in going inbye, where there is much less strain, the clamp, in passing over the rollers, touches them slightly.

The engine cannot pull coals from the endless-rope way and the single-rope way together, and if this were possible, it would be hardly worth while, since it never goes for more than 3½ minutes at a time in working the endless rope.

Experiments with Dynamometer.

Series.	Work done.	No.	Time.	Reading of Dynamometer.	Distance travelled in yards.	Speed. Miles an hour.
			h. m. s.	cwt.		
	Full tubs coming out.		12 0 0	..	..	..
A	.. ..	1	12 0 30	14	..	..
A	.. ..	2	12 2 15	10	..	..
A	.. ..	3	12 3 1	5	..	..
		..	12 3 40	..	655	6·10
	Empty tubs going in.					
B	.. ..	3	1 0 0	..	..	..
B	.. ..	2	1 0 43	1	..	..
B	Knocked off	..	1 2 05	1	..	..
		..	..	..	319	3·6

These experiments were made with a set of thirty-one tubs, the dynamometer being placed between the first and second tubs.

A piece of iron, A, placed between the two tubs, Fig. 3928, kept them at a regular distance

apart, and prevented the possibility of the chain, by which the dynamometer was suspended, becoming slack.

3928.

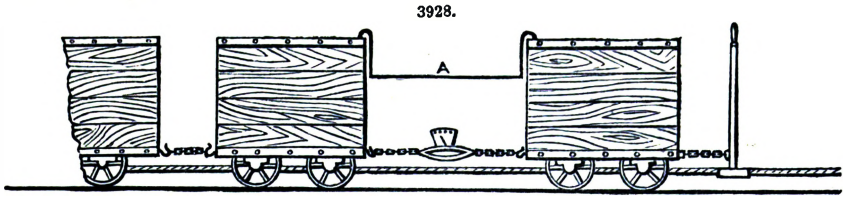

California Pit, near Wigan.—At this pit the endless rope is worked on the same plan as that in operation at Shireoaks Colliery. As experiments were made at Shireoaks to show the power required for a certain gradient with this endless rope, it was thought that a few notes of the mode of applying the system at the California Pit would be sufficient to show anything different in the application of it from what has been already described.

The engine by which the planes are worked is underground. It has two 14-in. cylinders and a 2-ft. stroke.

There are three distinct planes worked by this engine, all falling from the shaft. The following are some general particulars of each of the planes;—

Name.	Length.	Average gradient. (Approximate.)	No. of tubs a set.	Time required to bring set out.	Tons led a day.
North Level	620	¾ in. a yard	20	3 minutes	130
Down Brow	1370	2½ ,,	12	4 ,,	120
Duke's Slant	740	3 ,,	20	7 ,,	180

The tubs used hold 6 cwt. Each of the three ways is worked by two driving wheels, acting as one wheel with a double trod; these wheels are all close to the engine, and are horizontal. Motion is transmitted to the driving wheels by mitre-gearing. By an arrangement each of the driving wheels can be put in and out of gear when necessary; the three handles required for this are close together in the engine-house, and mitre-gearing is also used for working them.

The rope used for all the ways is of steel, ⅝ in. diameter. The planes have been at work about 3½ years, and the duration of the ropes is found to be about three years.

The rollers on the plane are 6½ in. in diameter, and are placed about 20 yds. apart.

Description of Method of Working the Plane.—As at Shireoaks, the ropes have to be tightened, in order to prevent them from slipping off the pulleys at the two ends of the planes. The tightening is effected by having, a few yards from the double driving wheel, another pulley fixed on a movable tram, round which the rope is passed. A chain is attached to this tram, to which a weight is connected; this weight is hung in a staple, as shown in Fig. 3929, and keeps the rope constantly tight.

The weights required to tighten the rope for each of the ways are—

	cwt.
North Level	30
Down Brow	30
Duke's Slant	40

3929.

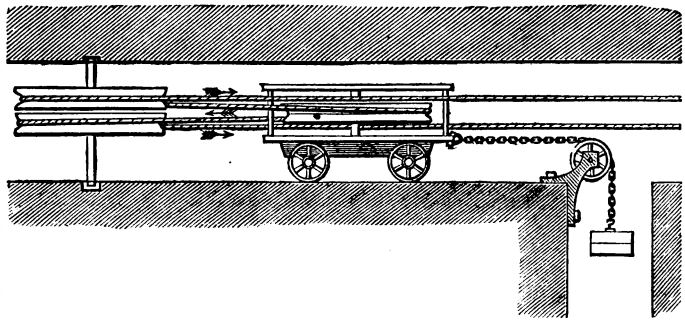

All the arrangement of driving wheels and tightening pulleys is under the way. The rope comes on to the wagon-way about 8 yds. from the driving wheel.

The number of tubs in a set is twelve on the Down Brow and twenty on the other planes. The highest average speed is on the Down Brow way, where the tubs run at a speed of 11·7 miles an hour.

A double way is laid the whole length of each plane. On the Duke's Slant and Down Brow ways an empty set is taken in and a full set brought out simultaneously, and as the gradient of both of these planes is considerable, the load upon the engine is lightened by this arrangement. The two planes referred to are sometimes worked together in this way, but they cannot be worked at the same time when the engine is hauling the full coals out, without the assistance of the ingoing empty tubs. This double journey on both of the planes requires the services of four gang-riders. There is only one regular gang-rider; and when others are required, they are taken from the stations at the inbye ends of the planes.

The clamp used at this pit for connecting the sets of tubs to the rope is different from that used at Shireoaks, in being secured by a ring passing over the ends of the arms, instead of a lever.

On the Duke's Slant and Down Brow ways the rope is connected to the set at the fore end in coming out, and at the back end in going in; and on the North Level, the gradient of which is much lighter, the set is connected at the fore end in going both directions.

There is a short curve of 4 chains radius on the North Level way, round which the rope and clamp pass easily, though not at a higher speed than seven miles an hour.

Newsham Colliery, Northumberland.—At this colliery the No. 1 endless-rope system is worked, as at Shireoaks, by the clip-pulley.

The chief peculiarities in the working of this engine-plane are as follow :—

1. Only one way is used, the empty and full tubs running on the same road, and half of the rope being carried on sheaves by the side of the way.

2. Instead of the clamp, used at Shireoaks, the set of tubs is connected to the rope by two short chains, one end of the chain being secured to the tub at each end of the set, and the other attached to a socket in the rope.

3. The plane is undulating, and thus presents one of the most awkward difficulties to contend with in the working of this system.

The endless rope is worked by a clip-pulley, driven by one of Fowler's engines. It is placed underground, and is worked generally at a speed of eighty-five strokes a minute, with a pressure of 80 lbs. of steam.

DIMENSIONS OF ENGINE, BOILER, AND ROPES.

Engine erected 1867.			
Number of cylinders			2
Diameter of cylinders		in.	12
Clip-pulley, diameter		ft. in.	7 6
Boiler ..	Number		1
	Size	ft. 15	in. ft. in. 5×3 6
	Coal consumed a day (splint)	cwt.	9
Rope ..	Length	yds.	1672
	Circumference	in.	2½
	General duration (estimated)	years.	2½

		Main.	Tail.
Sheaves ..	Diameter	in. 4½	in. 8
	Weight	lbs. 28	lbs. 31
	Distance apart	yds. 16	yds. 16
	Sheaves at curves (diameter)	ft. 3	
	,, (weight)	lbs. 224	
Rails ..	Weight a yard	lbs. 28	
	Gauge of way	ft. in. 2 8	
Tubs ..	Average weight (empty)	lbs. 672	
	,, (coal contained)	1120	

DIMENSIONS OF TUBS.

	Wood. ft. in.	Iron. ft. in.
Length inside	3 9	3 10
Breadth	2 9	3 1
Depth	2 0	2 2½
Height above rails	3 6	3 6
Distance coupled	1 9	1 10

	Wood. ft. in.	Iron. ft. in.
Diameter of wheels	1 4	1 4
Total number in pit	83	100
Number required to work endless-rope plane	96	
Work done, 400 tons a day of 12 hours.		

Description of Engine-plane.—The engine-plane is laid with flat-bottomed rails, weighing 28 lbs. a yard. There are two very slight curves on the plane, round which the main rope works easily in the centre of the way. The rope by the side of the way is taken round these curves by 3-ft. sheaves. The length of the plane is 836 yds. The road first rises from the shaft at a gradient of 1 in 40 for a distance of 318 yds., and then falls for a distance of 379 yds., at an average gradient of 1 in 47, the average gradient of the plane being a fall towards the shaft of 1 in 805.

The rope used is steel. By means of a bearing-down pulley, the rope is made to move in nearly the whole circumference of the clip-pulley. The rope has been in use for eighteen months, and is expected to last another year. It is kept tight, as at Shireoaks, by having a hanging weight attached to the sheave at the inbye end of the engine-plane. The weight used here is about 25 cwt.

Description of the Method of Working the Engine-plane.—The full and empty tubs are run in sets of thirty-two tubs. The sets are attached to the rope by chains, 7 ft. long, as shown in Fig. 3930.

3930.

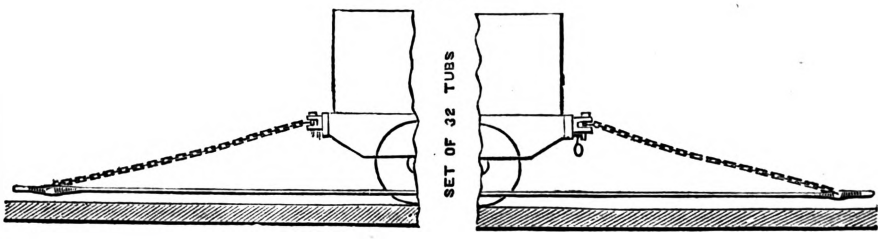

There are two sockets in the rope, placed at a distance apart convenient for the attachment of a set of thirty-two tubs, to which these chains are connected. The chains are put on at both ends of the set, the undulations of the plane rendering this necessary. The connection with the set is made simply by hooking on, and with the rope by a screw-shackle.

At each end of the plane the rope passes under the way, and in going in and out. when the set comes to this point, it is disconnected from the ropes, and the gradient of the way is so arranged that it runs by itself into the siding.

In going from the shaft, the set of tubs having fallen to the point at which the rope passes from under the way, the chain is attached to the fore end of the set; the engine then moves the set forward over a distance equal to the full length of the set, and the back chain is hung on. The moving of the set forward causes the coupling chains between the tubs to become tight, and the danger of the set overrunning the chain at the fore end of the set, when the gradient falling from the shaft is reached, is thus avoided.

There are no swivels on the chains connecting the set to the rope, the tightness of the rope tendering them unnecessary.

The sets are taken in and outbye, at an average speed of ten miles an hour. In disconnecting the set from the rope at the inbye end, the chain at each end of the set is taken off the tubs, but is not disconnected from the socket on the rope; this is done before the set reaches the siding, whilst it is moving slowly; when detached, it runs forward into the siding. At the shaft the leading chain is disconnected from the rope first, and then from the tub; this is done to allow the shackle to pass over the clip-wheel, which is placed rather close to the terminus of the engine-plane. The chain at the other end of the set is taken off the tubs only.

Endless-rope System.—This system of conveying coals is only in operation in the Wigan district, where it has only been in use for a few years. Of the four systems reported on it is probably the least known. Reports are given on the following planes. Experiments were made and costs extracted at the Bridge and Meadow Pits only;—

I.—Bridge Pit—Several planes at work, with an average gradient rising towards the shaft. One self-acting curve working.

II.—Meadow Pit—Single plane rising towards the shaft.

III.—No. 5 Moor Pit—Single plane, rising at a heavy gradient towards the shaft.

IV.—Mesnes Colliery—Undulating plane, worked by an engine on the surface.

V.—Scot Lane Pit—Single short plane, with peculiar method of connecting the tubs to the rope.

The principle on which No. 2 endless-rope system is worked is very similar to that of the endless-chain system.

The following are the chief peculiarities in the application of this system;—

1. A double line of rails is used.

2. The rope rests upon the tubs, which are attached to the rope either singly or in sets of tubs varying in number from two to twelve.

3. The connection between the tubs and the rope is effected by a short chain, which is secured to the rope in a way hereafter described.

4. As with the endless chain, the tub or tubs are placed at a regular distance apart, and the rope is driven at a slow speed.

5. Motion is given to the rope by large driving pulleys, and friction is obtained by taking the rope several times round the driving pulley.

6. Curves can be worked by this system.

There are no instances of branches being worked by this method of conveyance, but, as will be seen by the following descriptions, this could very easily be arranged for.

Bridge Pit, near Wigan.—The No. 2 endless-rope system has been at work at this colliery about three years, and is here more extensively applied than at any of the collieries in the district.

The engine working the planes at this pit is a double 20-in. cylinder horizontal engine, with a stroke of 3 ft. 6 in.; the boilers are underground, at a distance of 150 yds. from the engine. Unlike the general adaptation of ropes in this district, the ropes on the planes are worked by a main driving rope, motion being transmitted by having two pulleys on one shaft. This was necessitated by the distance of the engine from the point to which the coals are led. The rope is driven by a main pulley, 14 ft. diameter, working on the third motion. The ratio of the strokes of the engine to the revolutions of the pulley is as 7·4 to 1.

DIMENSIONS OF ENGINE, BOILERS, AND ROPES.

Engine erected 1863.

Number of cylinders	2	
	ft.	in.
Diameter of cylinders	0	20
Length of stroke	3	6
Diameter of piston-rod	0	3
Length of connecting rod	10	6
	in.	in.
Dimensions of steam-ports	$18\frac{1}{2} \times 1\frac{1}{8}$	
„ exhaust „	$18\frac{1}{2} \times 2\frac{1}{4}$	
	Steam. ft.	Exhaust. ft.
Length of breech-pipe	9	9
„ main pipe	450	390
	in.	in.
Diameter of breech-pipe	5	6
„ main pipe	6	7
	ft.	in.
Diameter of driving pinion	3	10
„ follower	7	5
„ fly-wheel (1)	10	3
„ driving wheel	14	0
Distance between centres of cylinders	7	$10\frac{1}{2}$

Boilers	Number	2		
	Description	Double tubular		
		ft.	in.	
	Length over all	30	0	
	Diameter	6	6	
		Main. yds.		Tail. yds.
Driving Rope	Length	787		4730
		in.		in.
	Circumference	3·9		3·14
		cwts.	qrs. lbs.	cwts qrs. lbs.
	Weight	48	0 32	175 2 26
		months.		months.
	General duration	24		14
Sheaves	Number (between main pulley at engine and tightening pulleys)	34		35
		in.		in.
	Diameter	14		14
Return Sheaves	Weight	lbs. 672		
		ft.	in.	
	Diameter	5	0	

Description of Engine-plane.—These planes are laid with round-topped bridge rails in 12-ft. lengths, weighing 18 lbs. a yard. All the planes are laid with a double line of way, one line for the ingoing empty tubs, and the other for the full tubs coming out. The general size of the wagon-way is 10 ft. by 4 ft., it having been originally made this size. The average gradient of all the ways together is a rise towards the shaft of 1 in 62, the chain-brow way being a rise to the shaft of 1 in 54, the slant way a fall towards the shaft of 1 in 47, part of it at the inbye end rising towards the shaft at a gradient of 1 in 5·5.

With the exception of the curve on the chain-brow way, all the planes at this colliery are quite straight.

Method of Connecting the Tubs to the Rope by Chains.—The chains by which the tubs are attached to the rope are of ⅜-in. iron, 6 ft. long, with a hook at each end. They are connected to the tub as shown, Fig. 3931. The fore end of the tub is first connected to the rope; this is done by attaching

3931.

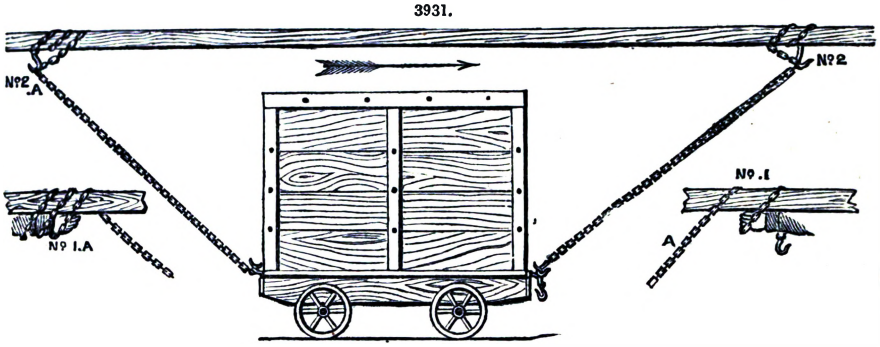

one end of the chain to the second link of the coupling chain of the tub, and throwing the other end over the rope, which is constantly in motion. The chain is then passed twice over the rope, the hand being introduced under the rope to receive the coils, in order to let the chain slide loosely on the moving rope till the hook is secured. When the right number of coils of chain (two in this case) have been passed over the rope, the hand is withdrawn, the point A is brought over the hook, and the chain is pulled tight; it is not until the chain is securely fixed that the weight of the tub is allowed to come upon the chain. The sketch (No. 2) shows the chain just when it has been passed over the hook. When the full weight of the tub is upon the chain, the coils get quite close together and form a very compact and secure fastening. An expert hooker-on does not need to put his hand between the coils, but passes the chain round the rope, and secures it before the rope has time to move on. The chain at the back end of the tub is attached in a similar way to that described above, but with three coils instead of two; this is necessary at the Bridge Pit, owing to the heavy weight of the tub upon the chain for a short distance in going inbye. The tubs on the other planes at this pit are attached in a similar manner. When two or more tubs are put on the planes together, chains are fixed on to the fore and back ends of the gang, or at one end only, as the case may be. The chain is disconnected from the outcoming tubs, at the back end, by unhooking the chain from the tub; it is then easily loosened from the rope. At the fore end the chain is tight, and the foot is placed upon it, pressing it down, and making it loose enough to admit of disconnection. There is more labour required in the disconnecting than in the attaching at this pit. This description has reference to the taking off of the full tubs at the end of the main road, and here there is a rise towards the shaft. At some other places the terminus of the full way is made to dip slightly, and the chains are removed just when the tub, passing over the brow, loosens the chain at the fore end. On the other hand, the labour required for attaching the empty tubs is less than at other places; here the empty way is made to rise slightly, the fore chain is put on first, and one boy is able to manage both. At another pit (No. 5 Moor), where the empty way, at the start, falls inbye, both chains have to be put on together, thus requiring two boys.

At the top of the main-road way at the Bridge Pit, a boy stands about 20 yds. from the place to which the full tubs come, and removes the back chain, leaving it hanging on the rope by the hook; it is taken off by the man who disconnects the chain at the fore end, and, together with the other chain, is thrown over by him to the place where the empties are hooked on.

The usual time for attaching both chains to the empty tub is about twelve seconds, the minimum time being six seconds, and the time for disconnecting is rather more. Sometimes a stoppage is caused by the fastening of the chain being difficult to disentangle, and the man disconnecting has then to rap to stop the engine, to prevent the tub from reaching the pulley

The chain is very seldom known to slip on the rope; when it does, the damage done is often rather heavy, since, should the fore chain slip, the tub going on to the back chain is generally upset, or in the absence of the back chain it may rest on the plane till the next tub comes up to it, the chain of which not only often knocks the tub off the way, but is sometimes broken itself, and as it is difficult to tell at the engine when such an occurrence takes place, there is much damage done before the engine is stopped. The chief accidents to tubs usually occur at the heavy gradient on the main way at this pit, for should a weak link in the connecting chain break whilst the tub is on this gradient, the tub getting loose generally breaks several other chains and tubs below it.

The slow speed at which the tubs go—being 1·35 mile an hour on the main road, and 1·126 mile an hour on the other ways—is necessary to prevent accidents to the tubs. The rope rests upon the tubs, and unless the way is laid perfectly straight, it is a slight distance from the centre of the tub; a small angle at a joint of the rails is sufficient to cause this deviation, and should the

rope catch any irregularity on the top of the tub, it will sometimes overturn it; to avoid this, much attention is paid to keeping the tubs in good repair, and this partly accounts for the heavy cost of maintaining tubs at this pit.

In the working of the endless rope at this colliery the apparatus for putting the driving wheels in and out of gear is found to be indispensable. Thus the chain brow, the main road, and the main road with the slant way, can each be worked separately; the workings at the inbye end of the main road serve to keep the main way supplied for a short time, when it is necessary to put the slant way out of gear.

There are two curves on the engine-plane at this colliery, one at the bottom of the main road worked by disconnecting and reconnecting the tubs, and the other which self-acts on the chain-brow way. At the former, which turns round an angle of 72°, the motion is transmitted from one pulley to another on the same shaft, as shown, Fig. 3932. The road is laid round the curve at such an inclination that the full and empty tubs when disconnected run by themselves to the place where they are again attached to the rope. There are five hands required here, four boys and one man.

This curve might probably be made to self-act, like the curve at the chain-brow way, by means of four or more pulleys, but when it was originally arranged, it was intended to draw a large quantity of coals from other districts besides the slant way.

3932.

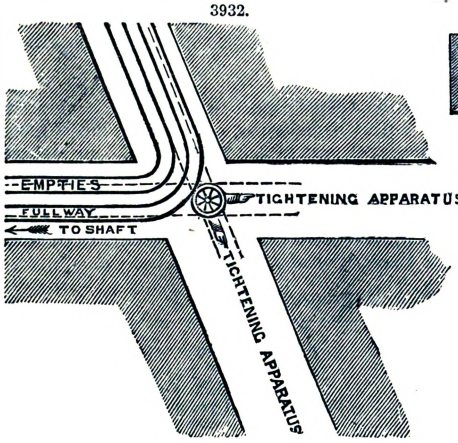

3934.

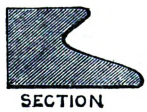

3933.

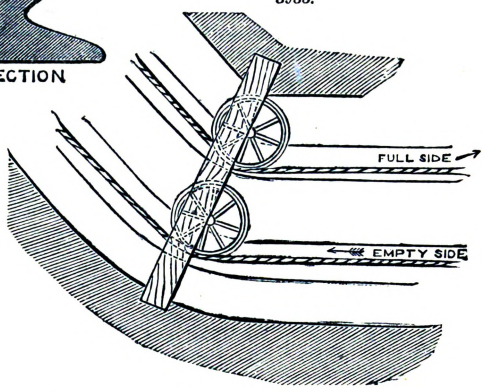

The curve on the chain-brow way is, as before described, of about 5 yds. radius, and at an angle of 118°, Fig. 3933. The ropes are taken round by two 4 ft. 6 in. pulleys, each inclining slightly towards the coming-on side. The way for the full tubs is laid nearly level, and for the empty a slight rise from the shaft; this arrangement, after many experiments, having been found to act most efficiently. The pulley wheels are made with a large flange on the lower side, Fig. 3934, to prevent the rope slipping off, and to enable the knot of the chain connecting the tub to the rope to pass easily into the trod of the wheels. The use of four pulleys instead of two at a curve of this description would enlarge the radius of the curve, and cause a smaller part of the surface of each wheel to be touched by the rope. Slow speed appears very necessary for working a curve by this system, for the jerk, which occurs when the tub, in passing round a curve, starts away after being stationary for a moment, would probably not fail to cause an accident if taken round at a much higher speed. A boy, placed near this curve for the purpose of taking off the chains at the fore end of the ingoing tubs, also attends to the curve when necessary.

Near the inbye end of the slant way there is a flat at which the tubs are taken off and put on, whilst the tubs passing to and from the terminus are in motion. The place is laid with flat sheets for a few yards, nearly on a level with the rails. The empty tubs are disconnected, and brought under the rope between two outcoming sets of full tubs. Points are laid on to the full way, and a full set or gang of two or more full tubs is put on, when the slackness of the rope indicates a long distance between two full sets.

Apparatus for Tightening Ropes.—The tightening pulleys, as used in this system of conveying small sets of one or more tubs by the endless rope, are fixed, and not similar to those used for the No. 1 endless rope at Shireoaks and other places, where the varying strain upon the rope, owing to

3935.

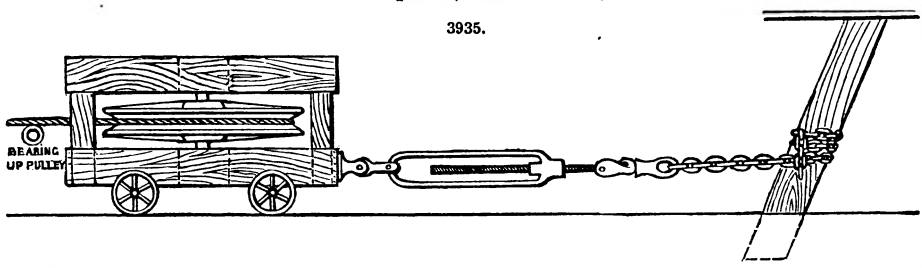

the set of tubs being at different parts of the plane, makes it desirable to have the tightening apparatus movable.

The pulley is fixed on a strong timber frame, to which a screw is attached. The screw is secured by a chain to a balk placed upright, see Fig. 3935. It is doubtful what strain is the effect of these tightening screws, but the engineer gives the following as what he estimates to be about the strain exerted.

Experiments with Dynamometer.—In making these experiments the dynamometer was attached by fixing clams to the rope about 4 yds. apart, and connecting the dynamometer by means of chains, Fig. 3936, to these clams; a screw was then applied to tighten the chain till the weight of the load upon the plane was wholly on the dynamometer.

3936.

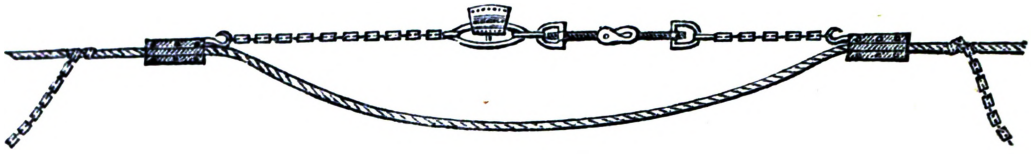

The experiments were made upon the main road, the slant way and chain-brow way being put out of gear. As it was not considered safe to take the instrument upon the heavy gradient, it was tried only upon the level part of the main road, and was first taken 297 yds. inbye on the empty side, and then back on the full side.

The engine was kept at the uniform speed of thirty strokes a minute, being the speed at which the experiments with the indicator were made. It was found very difficult to get the same number of tubs upon the plane as when experiments were made with the indicator. In going inbye there were forty-eight full and forty-four empty tubs upon the level part of the main road, and sixteen full and fourteen empty tubs upon the gradient of 1 in 5·5. In coming towards the shaft there were forty-eight full and fifty-eight empty tubs upon the level part, and twenty full and sixteen empty tubs upon the heavy gradient.

The readings of the dynamometer at each point, given below, are the averages of the maximum and maximum readings, the pointer often oscillating to the extent of 10 cwt.

ABSTRACT OF EXPERIMENTS WITH DYNAMOMETER.

Going Inbye.				Coming Outbye.			
Series.	Time.	Reading of Dynamometer.	Speed. Miles an hour.	Series.	Time.	Reading of Dynamometer.	Speed. Miles an hour.
	h. m.	cwt.			h. m.	cwt.	
A	11 7½	9	1·35	A	12 0	46	1·35
				B	11 59	44½	1·35
C	11 10	9	1·35	C	11 58	43	1·35
				D	11 55½	40½	1·35
E	11 12	9	1·35	E	11 52	38½	1·35
				F	11 50	34½	1·35
G	11 14	9	1·35	G	11 47¼	..	..

No. 5 Moor Pit, near Wigan.—The coals are led at this pit under very similar conditions to the Meadow Pit. There is only one plane, which is in a direct line from the engine, the gradient being almost a regular rise towards the shaft. The length of the plane is 980 yds., and the average gradient 1 in 13. The plane is worked by a double horizontal engine, having 12-in. cylinders and 2-ft. stroke. The driving wheel is 6 ft. in diameter, and is on the third motion. The ratio of the strokes of the engine to the revolutions of the driving wheel is as 14 to 1; and as the engine goes about seventy-four strokes a minute, the speed of the tubs upon the plane is about 1·7 mile an hour.

3937.

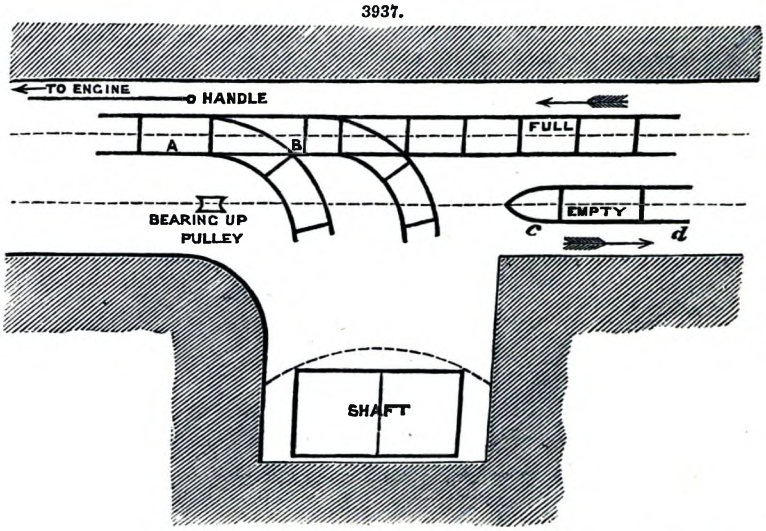

In the working of this engine road, the arrangement most worthy of note is that the braking of the engine is attended to by one of the hookers-on, by means of an iron rod, which extends from the engine to the terminus of the plane. The engine stands about 50 yds. from the plane, and is stopped in a moment when required.

There is a slight rise inbye about half-way along the engine-plane, and this necessitates the use of two chains for attaching each set of empty tubs; but as at the Meadow Pit, the heavier load of the full tub keeps the fore chain constantly tight, so that only one chain is needed in coming outbye. The chains at the fore ends of the empty tubs are taken off when the rise referred to commences, and are placed upon the out-going full tubs, Fig. 3937. The full tubs are put on two at a time, and empty tubs in sets varying from one to five tubs.

Scot Lane Pit, near Wigan.—At this pit an incline, 438 yds. in length, rising towards the shaft at an average gradient of 1 in 9, is worked by the endless rope.

The method of connecting the tubs to the rope at this pit is different to that in operation at the Bridge and other pits. Instead of the connecting chains being passed round the rope and thus secured, strong loops of hemp are fastened on to the rope by a wrapping of string, at regular distances apart. One hook of the chain is first attached to the tub, and the hook at the other end is then passed through the loop, as shown in Fig. 3938.

3938.

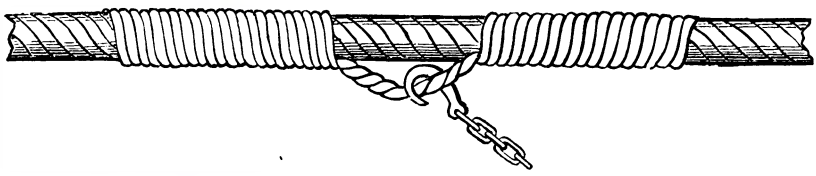

The tubs are sent along the plane one at a time, and as the gradient of the plane is very regular, only one chain is necessary for each tub. The heavy inclination causes the tubs to keep a constant weight upon the chain; on a light gradient the hook would probably be very liable to slip out of the loop. These loops are made of hemp, 1 in. in diameter, and last about four months; they are strong enough to draw twelve tubs at a time up the plane. They are fixed on to the rope, 17 yds. apart, thus making a regular supply of full and empty tubs necessary. Much less labour is required on connecting the tubs to the rope by this arrangement, but it would scarcely be so applicable on an irregular plane, where two loops would have to be provided for each tub or set of tubs. Although the rope passes 1½ times round the driving wheel, the loops are formed to pass round without causing an inconvenience.

South Wales Endless-chain System, Brynddu Colliery, Glamorganshire.—Since the first part of this Report was printed the above colliery has been visited, and as the mode of conveying coals is unlike any before described, and as it is peculiarly adapted to the circumstances under which it is applied, it is thought desirable to give a short description of this method of working the endless chain.

Dimensions of Engine, Boilers, and Ropes.

Engine erected 1858.			
Number of cylinders			1
			ft. in.
Diameter of cylinders			2 1
Length of stroke			4 5
Diameter of driving wheel			10 3
			tons.
Consumption of coal a day			4
Boilers	Number		3 on surface, 1 underground
	Description		Cylindrical
			ft. in.
	Length over all		30 0
	Diameter		6 0
			in.
Chain	Diameter of iron		1¼
			in.
Chain	Length of link		7
			cwt.
	Weight		440
			months.
	General duration		16
			lbs.
Rails	Weight a yard		25
			ft. in.
	Length of each		9 0
	No. of lines		4
	Gauge of ways		2 6
			cwt.
Tubs	Average weight (empty)		10
	„ „ of coal contained		15
Work Done. 500 tons a day of 10 hours.			

Description of Engine-plane.—The plane on which the chain is used is 600 yds. in length, and descends at the heavy gradient of 18 in. a yard from the shaft. The engine for hauling the coals up this incline is placed on the top of the plane, and works the chain by a horizontal driving wheel. The ordinary speed of the engine is about forty strokes a minute. The chain used is made of 1¼-in. iron, and has links 7 in. in length. The engine is horizontal. The arrangement of gearing for giving motion to the driving wheel will be seen in Fig. 3939.

The chain runs on rollers, which are placed 75 ft. apart. The connection between the chain and the tubs is made by a short chain 2 ft. 6 in. in length, made of ¾-in. iron, with an ordinary hook on each end. A tub attached in this manner to the chain is shown in the sketch, Fig. 3939. Only one tub is put on at a time, the distance between each tub being about 50 yds.

There are eight stations on the plane, at each of which the empty tubs have to be delivered, and full tubs brought away. This is done by a simple arrangement. Two long balanced arms, which are usually parallel with the roof of the wagon-way, are drawn down to the level of the

way when the tubs have to be put off or taken on at any station. The arms when brought down are level, and are so regulated by the counterbalance, and the weight hanging over the pulley,

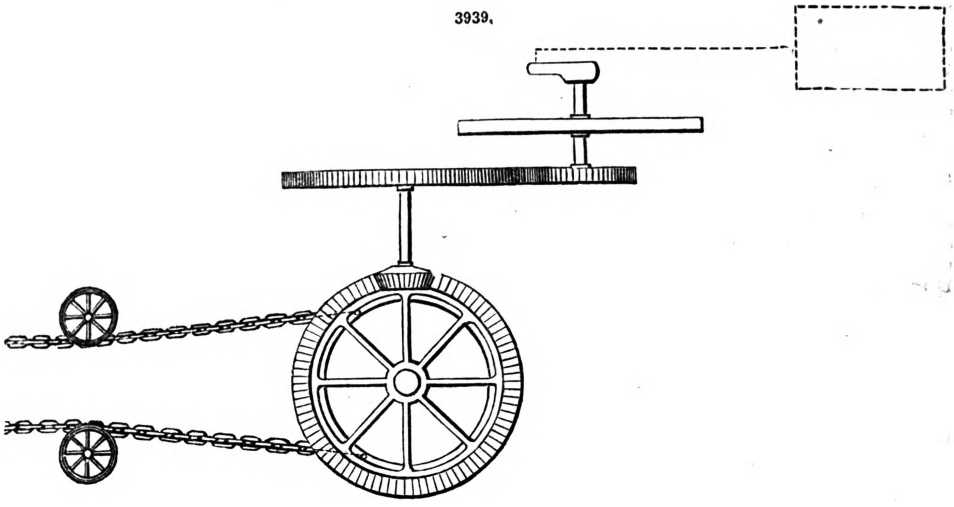

as to be very easily moved. There are two arms at each station for both empty and full ways, and these are supported by a beam across the wagon-way. Between each two arms an iron plate is laid, on to which the tub runs when disconnected from the chain; the tub is then turned on the plate, and taken into the station. The chain travels at the rate of two miles an hour, and at this speed the tubs can be easily connected and disconnected at the stations, without stopping the engine.

In attaching an empty tub at the top of an incline, the tub is brought close to the commencement of the incline, and the short chain is connected to the tub in the first place, and then to the chain, and immediately after the last connection the tub is pushed forward on to the incline; when the full tub comes to the top of the incline, the chains are disconnected just at the time when the tub coming on the level takes the weight off the short chain.

Considering the very exceptional character of the conditions under which this system is worked, and its singular adaptability both to the heavy gradient and to the leading of coals from numerous stations, it is probably the most economical arrangement which could be here adopted.

Extracts from the Summary of the Report of William Cochrane, George B. Forster, John Daglish, Lindsay Wood, R. F. Matthews, Acting Members of the Tail-rope Committee; Emerson Bainbridge, Engineer to Committee.—It would be difficult for the committee who present the foregoing Report on Underground Haulage to recommend for general use any one of the systems reported on, since each is peculiarly, and advantageously, applicable to one condition or more of wagon-way; it was therefore thought desirable to take a general view of each of the systems, and endeavour, by considering their respective advantages, to give some idea of their comparative worth under the various conditions in which they exist.

Tail-rope System.—This system of conveying coal underground is most largely developed in the counties of Northumberland and Durham, where, after many years trial, it has now attained a high degree of perfection.

One of the leading features of the tail-rope system is, that it can be applied under almost any condition of wagon-way, the crookedness of the way, irregularity of gradient, and numerous stations and branches, forming no obstacle to its effective working.

On a single road the tail rope is generally applied;—

1. When the gradient of wagon-way dipping inbye is not sufficient to cause the empty tubs to draw a single rope after them.

2. When the gradient dipping outbye is insufficient to make the tubs self-act.

3. When, as at North Hetton, the full tubs coming outbye will not pull the single tail rope after them.

This single tail rope (that is, a tail rope working without a main rope) is in operation in the main coal seam at North Hetton Colliery, where the engine-plane rises from the shaft, and the rope passing round a sheave at the inbye end of the plane, draws the empty tubs up the bank, the full tubs being braked down. This arrangement is usually adopted when the tubs will not self-act, and where it is desirable to have the engine near the shaft.

The tail rope is usually applied on branches to supersede horses.

The following are the conditions of the five tail-rope planes reported on;—

North Hetton—Two main roads, with branches worked both to the rise and to the dip, and with curves on the main road and on the branches.

Seaham—Engine-plane, with slight curves, rising towards the shaft.

Seaton Delaval—Engine-plane, with slight curves, level.

Harraton—Engine-plane, with sharp curve, falling towards shaft; one branch worked.

Murton—Engine-plane, with curves, rising towards the shaft.

Methods of Applying the Tail-rope System.—The arrangement of engine and appliances for working the tail-rope system usually consists of an engine with two drums, worked on the second motion—the drums being either on different shafts, and put in and out of gear by shifting carriages, or on the same shaft, clutch-gear being then used for connecting them with the engine. One drum is used for the main rope, and the other for the tail rope. At the inbye end of the main road, and of each of the branches from the main road, there is a sheave round which a tail rope passes, both ends of which, when used on the branches, are brought to a station on the main line; when only one way is worked, one end of the tail rope is brought up to the station, whilst the other is attached to the tail drum. In taking a set of tubs, which usually numbers from thirty to sixty, inbye, the tail-rope drum is connected to the engine, and in coming outbye, the main-rope drum; in going both inbye and outbye, the brake is gently applied to the loose drum to prevent the dragged rope from becoming too slack.

When two wagon-ways are worked in opposite directions from the engine, four drums are generally used, there being then a main and tail rope for each way.

Curves can be worked by the tail-rope system at any angle and at a comparatively small radius. The curves at North Hetton, of 22 yds. radius, have perhaps the minimum radius at which curves can be made to work safely. The fact that the sets pass round these curves at the rate of ten miles an hour, and that an accident very rarely happens, is sufficient proof of their efficient working. The sheaves (3 ft. diameter) used at the Harraton curves are doubtless the means of economizing the power, and effecting a considerable saving in the wear and tear of the rope.

In working branches by this system there are three methods of attaching the branch-rope ends to the main rope; these will be seen by the sketches, Figs. 3940 to 3942; in Figs. 3940, 3941, the ropes are changed when the set of tubs is near to the branch end, but Fig. 3942 shows the set at the shaft.

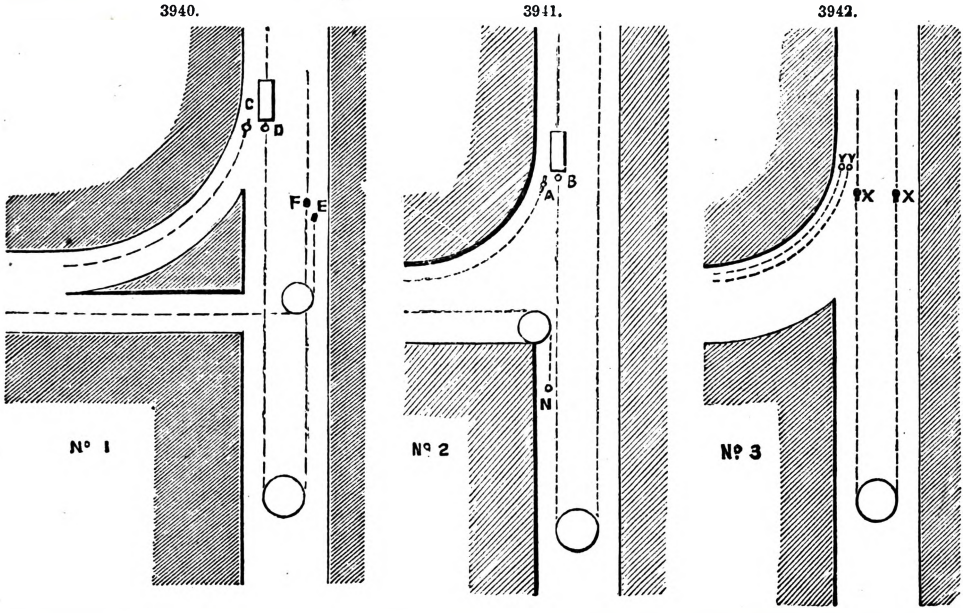

In Fig. 3940 a wheel is fixed near the roof or under the rails, round which one end of the branch rope passes. When the incoming set has to go into the branch, the rope end C replaces D on the fore end of the set, and the end E replaces F on the tail rope.

In Fig. 3941 the tail rope always remains entire; the end A replaces B, and the end B of the rope is brought a little farther by the engine, and is then attached to N. This method of attaching the ropes, which is in operation at Murton East Pit, can be worked without a winch, which is generally necessary in Fig. 3940.

In changing the ropes by method, Fig. 3942, a very different course is pursued. When a set is taken outbye from any station to the shaft, the boy at one of the branch ends changes the ropes, whilst the ropes at the shaft are being attached to the empty set. The position of the ropes is so arranged, that when the set reaches the shaft, the shackles on the main and tail ropes are just opposite each other at each branch end, as shown on sketch, when the rope ends X X are replaced by Y Y.

This plan is much more expeditious than either of the others, since in Fig. 3942 no time is lost in changing the ropes, as they are generally ready at the branch end before the set is ready at the shaft; but in the other methods, another stoppage, in addition to the time required to change the ropes at the shaft, is necessary.

At Harraton, the method, Fig. 3940, of changing the ropes is preferred; there is only one branch at this colliery, and they bring out such a large quantity of coal from the two ways, that till the empty set has had time to get to the switches, it is difficult to tell which of the ways is ready for it. It would thus appear that when few branches are worked, and a large quantity of coal is brought out, No. 1 or No. 2 method of changing the ropes is preferable to No. 3.

The labour at a branch end can be managed by one boy; when Nos. 1 and 2 methods are adopted, a *run-rider* is of some service, as two connections have to be made, and at points often some distance apart; with No. 3 method a run-rider is not so necessary, but is generally employed. When two branches are worked opposite to each other the same amount of labour is sufficient. Run-rider is the name given in the North of England to a man or boy who rides on the last tub of the set, for the purpose of signalling to the engineman in case of an accident; he also assists in connecting the ropes to the set.

Three methods of taking the ropes round curves will be seen on the sketches, Figs. 3943, 3944. In No. 1 the curve has a large radius, and the tail rope is taken round a single sheave, and along a narrow place, a pillar of coal supporting the roof between it and the curve. The curve in No. 2 is of less radius, and no pillar is left. In No. 3, which is generally adopted on very short curves, instead of taking the tail rope round a single sheave, both ropes are taken round the curve by a number of sheaves.

3943.

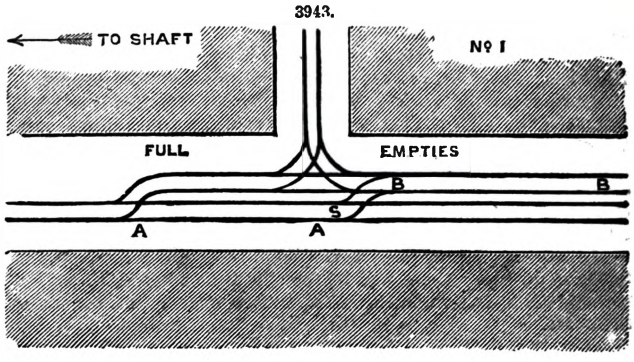

The tail rope is often applied to work a plane with no branches, but with one or more stations on each side of the main way, in which case only one set of ropes is used. Murton and Seaham planes present examples of this arrangement. These stations are usually worked by one of the two methods shown, Figs. 3943, 3944.

3944.

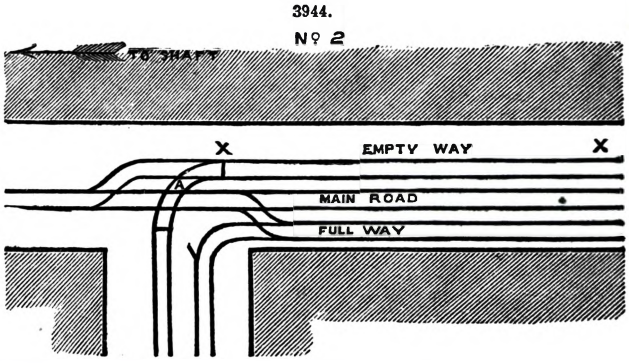

In No. 1, which represents the arrangement of the North Hetton stations, the ropes are knocked off the empty set in going in at the points A A, opposite to which the full set stands ready to go out. A gentle fall in the way causes the empty tubs to run forward, and they are turned by the switch S into the siding B B.

In No. 2, which shows the Seaham Colliery arrangement, the middle way is the main road; the empty tubs, having been brought into the siding X X, are then brought round the curve A, which consists of two movable rails. When the full set comes out these rails are removed. With this arrangement the drivers have to cross the main road every time they take the empty tubs inbye; this is avoided with the stations worked as at North Hetton.

The engine and boilers requisite for working the tail-rope system are usually arranged in one of the three following ways;—

1. The engine and boilers both on the surface, the rope being taken down the pit in wooden boxes.

2. The boilers on the surface, and the steam-pipes taken down the shaft to the engine underground.

3. The engine and boilers both underground.

Endless-chain System.—The experiments on the endless-chain planes, which follow next in order to those on the tail-rope planes, were all made at the collieries at Burnley, under the management of Mr. W. Waddington.

Although the endless-chain system of leading coals has been in operation at Burnley, and other parts of Lancashire, for a great number of years, it has until lately been very little known in the North of England.

Like the tail-rope, the endless-chain system is adaptable to every condition of wagon-way, but differs from the former system in the following important items;—

1. As a general principle, it may be stated that when the two ends of an undulating plane are at the same level, the power required to work such a plane will be very little more than if the plane were perfectly level.

2. A heavy gradient can be worked safely and efficiently.

3. Since the chain will only work safely in a straight line, or, at the most, round a slight curve, every sharp curve upon the planes necessitates the erection of two pulleys, in order to direct the chain to another course, and requires the attention of a man or boy.

The system is very extensively in operation on the surface at Burnley, and the slow speed at which the tubs are conveyed not requiring a very carefully-laid wagon-way, they generally lay the way upon the uncut sod, only making embankments or erecting gearing when a stream or deep defile has to be passed over. The surface of the country is very hilly in this district, and it is

therefore more economical to carry the coals from the pits to the canals and railways in tubs by the endless chain, than by wagons on ordinary railways.

The endless-chain planes reported on are as follows;—

Hapton Valley.—Underground chain road.
" " Surface chain road.
Gannow, top bed.—Underground chain road.
" low bed.— " "
Rowley.—Underground chain road.
" Surface chain road.
Clifton Hall.—Surface chain road.

Methods of Applying the Endless-chain System.—The engines working the endless chain at Burnley are nearly all of one class, namely, double 12½-in. cylinder vertical overthrow engines. Motion is transmitted to the wheel driving the endless chain by means of toothed gearing; the engine usually goes at a speed of about eighty strokes a minute, and works the driving wheel on the third motion.

The engine-plane consists of two lines of rails, one for the full, and the other for the empty tubs, the tubs moving in opposite directions. The lines are generally laid just near enough together to allow a few inches play between the tubs on the empty and full ways.

In working a straight main way (that is, with no branches), such as the Rowley and Hapton Valley surface planes, by the endless chain, the driving power is generally placed at the higher end of the ginney road. The only wheels requisite for working the chain are the driving wheel at one end, and a tail or return sheave at the other end of the plane; between these two points the chain rests upon the full and empty tubs, the distance of which apart, and the speed at which they are moved, vary according to the quantity of coal passing along the plane, the distance between the tubs being from 10 to 30 yds., and the speed from one to three miles an hour.

The wheels round which the chain passes at the two ends of a ginney road are usually 3 ft. in diameter. The driving wheel, as used at Burnley, generally consists of an ordinary sheave, round which a piece of boiler-plate, about 10 in. wide, is fixed, and to this are attached about twelve steel or iron feet, on which the chain rests; these feet are renewed, as required, and thus the chain never touches the plate. The method invariably adopted at Burnley, in order to get friction sufficient on the chain to prevent it slipping round the driving wheel, is by passing it 2½ times round the wheel; at Towneley Colliery it is passed 4½ times round. At the Baxenden Collieries, near Newchurch, ordinary sheaves, with forks about 12 in. apart fixed in the trod, are used as driving wheels, the chain only passing half a turn round, and the horizontal link of the chain fitting into the fork. These wheels, which are much preferred at Newchurch, were formerly used at Burnley, but are now altogether abandoned in favour of the bevel-faced wheels. The return wheels, at the other end of the ginney road, are just common 3-ft. sheaves, round which the chain passes half a turn.

When there is a curve in a single chain road, either the same chain is taken round the curve by two wheels on different shafts, arranged like the self-acting curves on the surface, or there are two pulleys on the same shaft on which are different endless chains. If there be no branch way from the curve, the former method is usually adopted, and the road is so formed that the tubs will leave one chain, pass round the curve, and connect themselves to the other chain, without any assistance; but as this cannot be depended upon, attention is always necessary at a curve. At the Burnley Collieries there is generally a branch end at every curve.

There are only two self-acting curves in the Burnley district, both of which are on the surface. These curves generally work very well, and without the occurrence of any accident; but as a badly-greased tub, or a tub getting off the way, causes some damage, if not looked to, they are always kept in sight, that at Padiham being within a few yards of a man constantly working at the same place, and that at Towneley within view of the terminus of the ginney road. With very carefully-laid rails, and due attention to the exact point at which the rise or fall of the way should be, curves might be worked at almost any angle, and with very little attention.

As far as hitherto proved, it may be laid down as a rule in the working of the endless-chain system, that all curves underground require labour, and thus it is generally desirable either to have a branch or branches from the curve, or to pass the tubs round by the self-acting method described, which could be managed by a boy at 1*s.* a day. It has yet to be shown to what extent curves can be worked by this system without pulleys. At the Baxenden Collieries, in Lancashire, a curve of about 15 chains radius has lately been commenced on the surface, and is found to work very satisfactorily.

In working branches the chain passes round a wheel at the branch end, which transmits motion to another pulley or pulleys, either on the same shaft, or on another shaft a short distance off; when the pulleys are on another shaft, motion is given either by mitre-gearing and shafting, or by a short endless chain; at Towneley motion is transmitted by continuing the same chain past a branch end, and taking it over a pulley which works the branch by means of vertical gearing. The pulleys on the main road for working the branches are generally so arranged, that they can be put out of gear, in case of any accident or slackness of work, whilst the other chains continue in motion.

Though it would appear rather difficult to work a branch on each side of the main way to the same point, since the full tubs from one of the branches cross over the course of the empty tubs on the main way, and the empty tubs from the other branch cross the course of the full tubs, the slow speed at which the tubs travel prevents this from causing any inconvenience.

Another mode of working branches is that carried out at Marsden Colliery, near Burnley, where two branches are worked by one chain passing round a single pulley. This is the only one of all the methods of working branches, in which one branch cannot be put out of gear without stopping another.

In each of the arrangements mentioned for working branches, it is necessary that the tub should

leave the chain at the station—becoming attached to it again immediatelybeyond the pulley; and the attending to the re-attaching of the tubs at the branch ends in this way, is one of the chief items of labour in the cost of leading coals by the endless chain. The mode of working branches usually adopted at Burnley, is to have shafting and mitre-gearing under the flat sheets, sometimes, as at Hapton Valley, working two branches from the same mitre-wheel.

In working branches by the endless chain no regular curves are necessary, since at the branch ends the termini of ginney roads are usually laid with flat sheets upon which the tubs are turned; the small tubs used at Burnley can be turned so quickly, that there is often not more than 10 ft. from the end of one ginney road, to that of another at right angles.

At Gannow and Rowley Collieries the underground endless chain is worked by an engine on the surface, the chain at the latter colliery being attached to the winding engine. The way in which the chain is conveyed down the shaft is very simple, and is shown in the section of the Rowley and Gannow underground planes, Fig. 3945. Whilst a $\frac{5}{8}$-in. chain is used in the workings, a $\frac{3}{4}$-in.

3945.

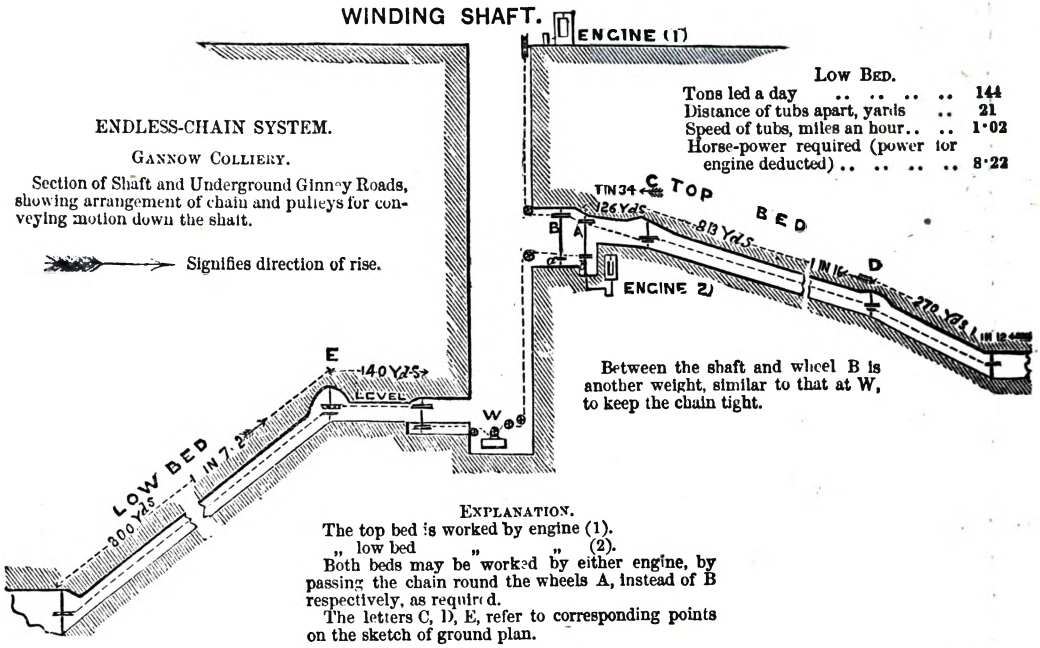

chain is used in the shaft, the latter being usually kept tight by passing the chain, at the bottom of the pit, round a sliding pulley, to which a suspended weight is attached. A sufficient proof of the efficient working of the chain in the shaft, and of the very small amount of power requisite to take it down the pit, is given by the results of the Rowley experiments, which show that only 0·54 horse-power is required to take the chain 150 yds. down the shaft, and 27 yds. from the bottom of the shaft to the main driving wheel.

As compared with the tail rope, the maximum advantage of the endless chain, as far as the power requisite to drive the system is concerned, is probably realized on an undulating plane, the ends of which are at the same level. A very good instance of the counterbalancing effect of an undulating road is shown on the Rowley plane, which is 1980 yds. long, the highest point on the plane being 145 ft. above the lowest, and the average gradient 1 in 68, fall for full tubs; here only 5·16 horse-power is required to work all the tubs, and chain suspended on the tubs. Another instance is at Rowley Colliery, where the average gradient of the planes is sufficient to cause all the tubs to self-act. The planes at this colliery, however, are kept connected to the engine for reasons explained in the report on the Rowley plane.

The chief feature of the self-acting planes, as worked by the endless chain, is that *a regular gradient is unnecessary*, a heavy dip at one part of the plane being sufficient to cause the tubs to self-act. Thus a plane may have a rise for some distance for the full coals, and yet, since there is continually a load upon the heavy part of the plane in favour of the full tubs, self-act. Thus planes can self-act by the endless chain which could not possibly do so with a rope.

At Burnley, the force of gravity on self-acting planes is sometimes made to work a level plane at the top of the self-acting plane.

Stations are worked by the side of the main chain roads, simply by having small pulleys fixed to the roof, Figs. 3946, 3947, opposite to the station, on which the chain is placed when tubs are required. There are generally iron flat sheets at the stations over which the tubs are brought from the opposite side of the way. A tub, after having been passed over the flat sheets, is allowed to be altogether moving on the rails again before it is touched by the chain, in order that the chain may be sure to reach it in the centre.

The method of leading coals by the endless chain as adopted at Clifton Hall Colliery, which consists in moving the tubs by the weight of the chain alone, there being no forks on the tubs, can

only be recommended when the plane to be worked is level or nearly level, and where the system is not extensively applied.

3946.

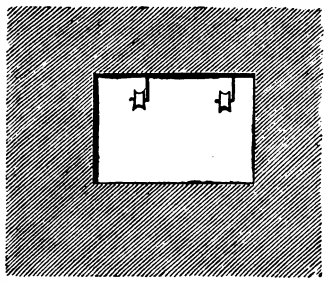

3947.

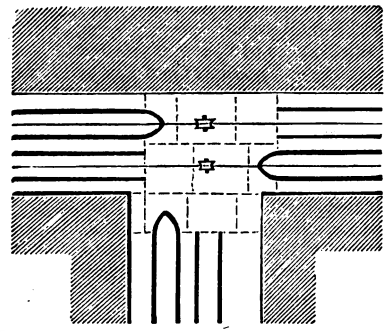

Endless-rope System.—This system of conveying coal is closely allied to the tail rope, but has hitherto been adopted in the working of underground planes, only to a limited extent.

The following planes, the conditions of which are given on page 1862, are reported on, and present four distinct methods of applying the system;—

I.—Shireoaks Colliery—Engine-plane, with double way, worked by rope at quick speed, the tubs being attached to the rope in sets, by a clamp.

II.—California Pit.

III.—Newsham Colliery—Engine-plane, with single way, worked by rope at quick speed, the tubs being attached to the rope in sets, by short chains secured to sockets in the rope.

IV.—Eston Mines—Three sidings, worked by the socket connection at slow speed.

V.—Cinderhill Colliery—Engine-plane, with double way, and sets of full and empty tubs running at the same time at slow speed, the sets being connected to the rope by clamps.

Experiments were made only at Shireoaks Colliery.

Methods of Applying the No. 1 Endless-rope System.—In the application of this system as adopted at Shireoaks and the California Pit, a double way is used, and the rope moves on rollers in the middle of the way, the set of tubs being taken in on one way and brought out on the other.

Motion is given to the rope either by a clip-pulley, or by several wheels, round which the rope is taken to obtain sufficient friction. The rope is kept constantly tight by having the return sheave fixed on a movable tram, to which a weight, hanging in a staple, is attached.

The set of tubs is connected to the rope by a clamp, which is held by a boy sitting in the foremost tub. Different descriptions of clamps are used; the clamp in use at Shireoaks differs in construction from that used on the California and Cinderhill planes. As these planes rise in one direction, only one clamp is employed; but were the planes undulating, two (one for each end of the set) would be required, and as this would make two men or boys necessary for each set, the use of the clamp, under these circumstances, would not be advisable.

The number of tubs in a set varies from twelve, on one of the California ways, to thirty-one at Shireoaks, and the speed at which the sets travel is about the same as with the tail-rope system.

The clamp is usually attached at the front end of the set, but on one of the California planes the gradient is heavy enough to allow the clamp to be applied to the last tub of the set, in going in; when, as occasionally occurs, the full and empty sets are run together on the plane, this assists the engine.

In the application of this system at Newsham and Eston, motion is given to the rope, which is also kept tight by a hanging weight, by the clip-pulley, as at Shireoaks, and the set of tubs is connected to the rope by means of one or two short chains, which are secured by means of a hook or screw-shackle to a socket in the rope. At Newsham, owing to the undulations of the plane, two chains attached by the screw-shackle are required, whilst at Eston, where the roads are short and level, the set is attached to the rope by a single chain, which is simply hooked on. The Eston arrangement is adaptable when there are numerous short sidings, and could probably be economically applied in the place of horses at collieries where there is a good deal of branch work. The plan at Newsham of having a single way, as with the tail-rope system, and of running one part of the rope on sheaves by the side of the way, is probably the best arrangement of the system, and that which, for the following reasons, may be expected under some circumstances to supersede the tail rope.

1. A driving wheel is used instead of two drums.
2. One-third less rope is required.
3. The power expended with the tail rope in overcoming the friction of the brake on the loose drum is utilized by the employment of a single wheel.

It has yet to be shown how far this system is applicable where curves, and the working of branches, have to be contended with. With the clamp connection a slight curve is worked on one of the California planes without any difficulty. No instances are known of curves occurring on wagon-ways where the socket connection is adopted, but in all probability they could be managed without much difficulty, the tightening of the rope being the only obstacle to their efficient working.

The slow motion of the rope, as worked at Cinderhill, would allow it to pass round curves of almost any radius. The system adopted at Cinderhill, which consists in having a double way, and in running the sets of full and empty tubs at the same time at a speed of 2½ miles an hour, cannot

be recommended owing to the heavy cost of labour, each set being connected by a separate clamp which is attended to by a man or boy. Friction for driving the rope is obtained at this colliery by taking it round five wheels, and the rope is made tight by having two of the wheels placed on a movable carriage; with an undulating plane where the load varies, this method of tightening the rope would not answer.

The chief defect of this endless-rope system, as far as hitherto developed, is its inapplicability to the working of branches from the main way, the tightness of the rope precluding the possibility of offtake links being used, as with the tail rope. A series of clip or friction pulleys, with disconnecting gear, might perhaps answer the purpose, but in this case, as the tubs could not go round the right angle without being uncoupled, the set of tubs would have to be disconnected from the rope, and sent by its own impetus round a curve into the branch way, where it would be attached to the branch rope. Of course this would only be possible under exceptional conditions of wagonway, and as considerable labour would be required were the socket connection adopted, the clamp would be the most economical mode of attachment.

Stations by the side of the main way might be worked by the system without much difficulty, but would require rather more labour than by the tail-rope system. At Shireoaks the rope at the station passes under the way, and when the ingoing set is intended for the station, the clamp is removed some distance from the points, and the set runs into the siding by itself. With this arrangement the set could not go any farther inbye, if attached to the rope, but, as

3948.

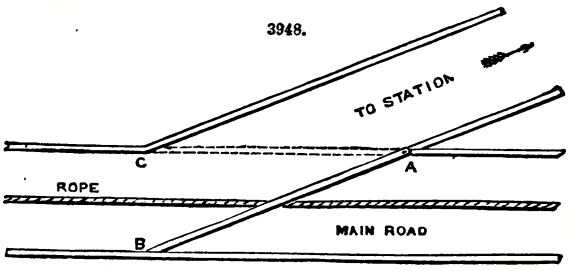

3949.

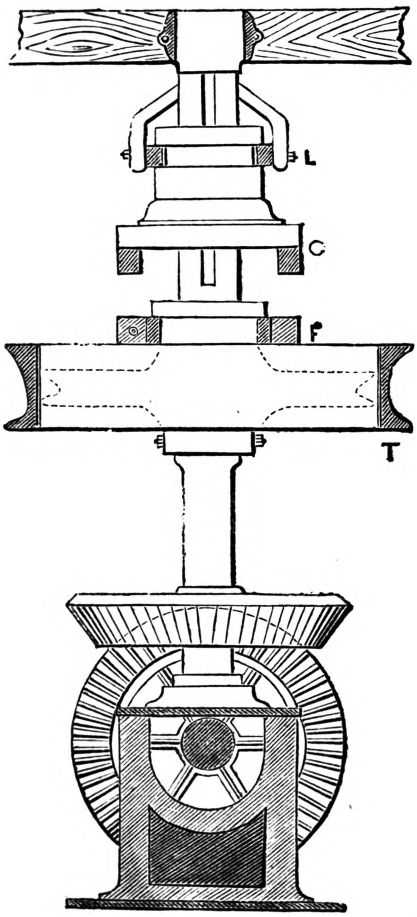

3950.

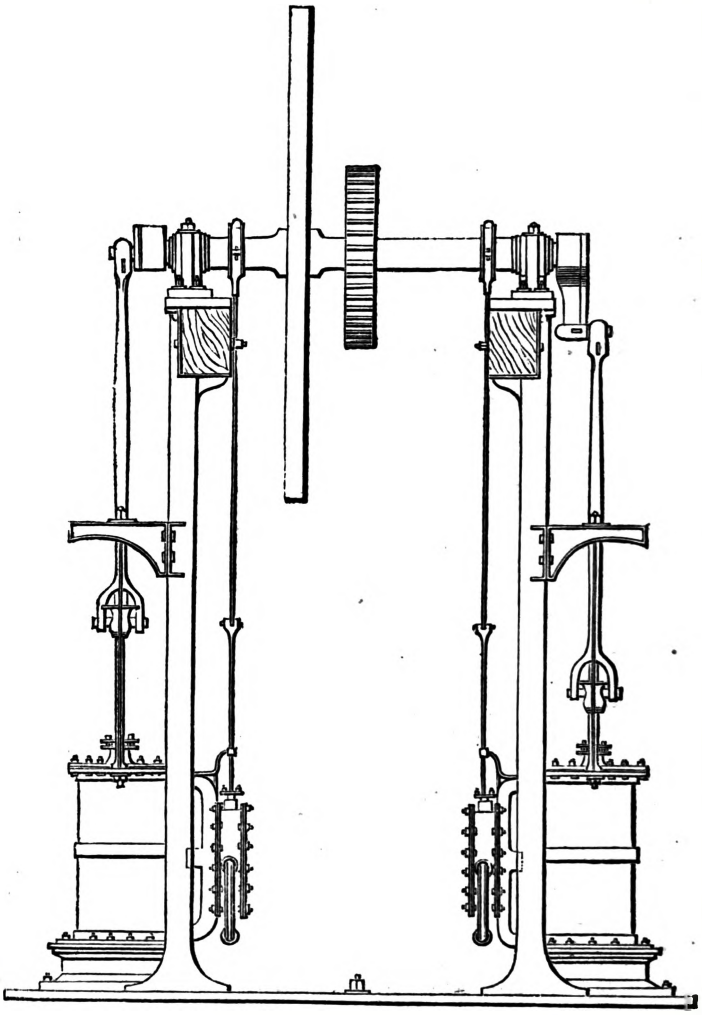

explained in the Shireoaks report, the set when going in is disconnected from the rope before reaching the station, and the inclination of the way is sufficient to take it to the end of the plane. It will thus be seen that on the Shireoaks plane, stations could not be worked under other conditions than those described. They might, however, be arranged like the tail-rope stations, Fig. 3943, and by having the points leading from the main way to the siding movable, as shown, Fig. 3948, the difficulty of the rope being endless would be obviated. Here the rail A B moves on a pivot at A, Fig. 3948; if the set had to go into the station, this rail would be placed as shown, the rope passing *under* the rail; if it were intended for the main road, the rail would be put into the position A B. More labour would be necessary in leading coals from stations in this way than is requisite with the tail-rope system, which is very well adapted for the purpose.

As this system is capable of conveying a large quantity of coals on a single way, the double way as adopted at Shireoaks may be considered quite unnecessary, and can only be recommended where sockets are used and run-riders dispensed with, and where the inclination of the engine-plane is such that one set of tubs will give assistance to another throughout the greater part of the plane.

Fig. 3949 is of an effective arrangement of driving wheel at Hapton Valley Colliery. Fig. 3950 is of the vertical double engine at Hapton Valley and Rowley Collieries. See AGRICULTURAL IMPLEMENTS, p. 29. BRAKE. COAL-CUTTING MACHINE. COAL MINING. COAL WASHING. DRAINAGE. DYNAMOMETER.

HAUNCH. FR., *Esselle;* GER., *Gewölbeschenkel;* ITAL., *Coscia della volta;* SPAN., *Riñon de una bóveda.*

That part of an *arch* between the key-stone and the springing is sometimes termed the haunch of an arch; the two parts between the crown and the springing are hence called the haunches of the arch. See ARCH.

HAWSER. FR., *Aussière, Grelin;* GER., *Tross, Schlepptau;* ITAL., *Gherlino;* SPAN., *Guindaleza.*

A hawser, or halser, is a small cable; or a large rope, in size between a cable and a tow-line. The sizes and lengths of hawsers and warps, according to Lloyd's Rules, are given in the following tabulated form.

Ship's Tonnage.	Hawsers and Warps.					Ship's Tonnage.	Hawsers and Warps.				
	Stream.		Hawser.	Warp.	Length.		Stream.		Hawser.	Warp.	Length.
	Chain.	Rope.					Chain.	Rope.			
tons.	ins. 16ths.	inches.	inches.	inches.	fathoms.	tons.	ins. 16ths.	inches.	inches.	inches.	fathoms.
50	0 7	5	3	..	90	600	0 13	9·5	7	4	90
75	0 7	5	3	..	90	700	0 14	10	8	5	90
100	0 8	5·5	3	..	90	800	0 14	10	8	5	90
125	0 8	5·5	3·5	..	90	900	0 15	10	9	5·5	90
150	0 9	6	4	..	90	1000	0 15	10	9	5·5	90
175	0 9	6	4	..	90	1200	1 0	10	9·5	6	90
200	0 10	6·5	4	..	90	1400	1 0	10	10	6	90
250	0 10	7	5	..	90	1600	1 1	11	10·5	6·5	90
300	0 11	7·5	5·5	..	90	1800	1 1	11	11	7	90
350	0 11	7·5	5·5	..	90	2000	1 2	11	11	7	90
400	0 12	8	6	..	90	2500	1 2	12	12	8	90
450	0 12	8·5	6·5	..	90	3000	1 3	12	12	8	90
500	0 13	9	7	..	90						

HEART-WHEEL. FR., *Roue en cœur;* GER., *Herzscheibe;* ITAL., *Ruota a cuore;* SPAN., *Rueda de corazon.*

See GEARING.

HELIOSTAT. FR., *Heliostat, porte-lumière;* GER., *Heliostat;* ITAL., *Eliostata;* SPAN., *Heliostato.*

A heliostat, Fig. 3951, is an instrument by which a sunbeam may be introduced into a dark room, and, by means of clockwork, kept directed to, and upon a fixed point. A heliostat, suitably arranged, is often employed in trigonometrical surveying. See GEODESY.

Silbermann's Heliostat.—This apparatus is mounted on a plate which moves round a vertical axle, and is adjusted by means of a level; the position of the axis of the time-piece is made to correspond with the latitude of the place by means of an arc and the adjusting mechanism *u*. Supposing now that this axis has been placed in the meridian and that C C′ represents the dial, D D′ a limbus, the centre of which is in O, and in the plane of which is carried a needle pointing to the correct hour indicated on the dial, then the plane of the limbus will pass through the centre of the sun. The limbus D D′, which moves in a box B, in which it may be fixed at any position by means of the screw V, is divided into parts, and by making the distance from the centre of the box to the end D of the limbus equal to the complement of the declination, the line D O M will represent the direction of the rays of the sun.

The mirror is carried by a jointed or articulated rhombus, the diagonal P P′ of which is vertical to the plane of the mirror; this rhombus is constructed in such a manner that one of its sides is parallel to D O, that is to say, parallel to the rays of incident, whence the reflecting rays become parallel to the other side of the rhombus. By means of a second limbus R R′, which can be fixed in its position by the screw V′, the inclination of these reflecting rays can be changed; and in order to bring these rays into all possible azimuths, the limbus R R′ is carried upon a hollow shaft A, which contains, besides the transferring mechanism of the time-piece, the moving

mechanism for the needles and the other limbus D D'; this shaft A can be fixed by the hand-screw V". A pinule *e* and a screen P are arranged in such a manner that the chord *e* P is parallel to O D, whence the ray that passes through *e* arrives always at P as soon as the apparatus is regulated. This circumstance or condition may be used, on the other hand, for placing the axis in

3951.

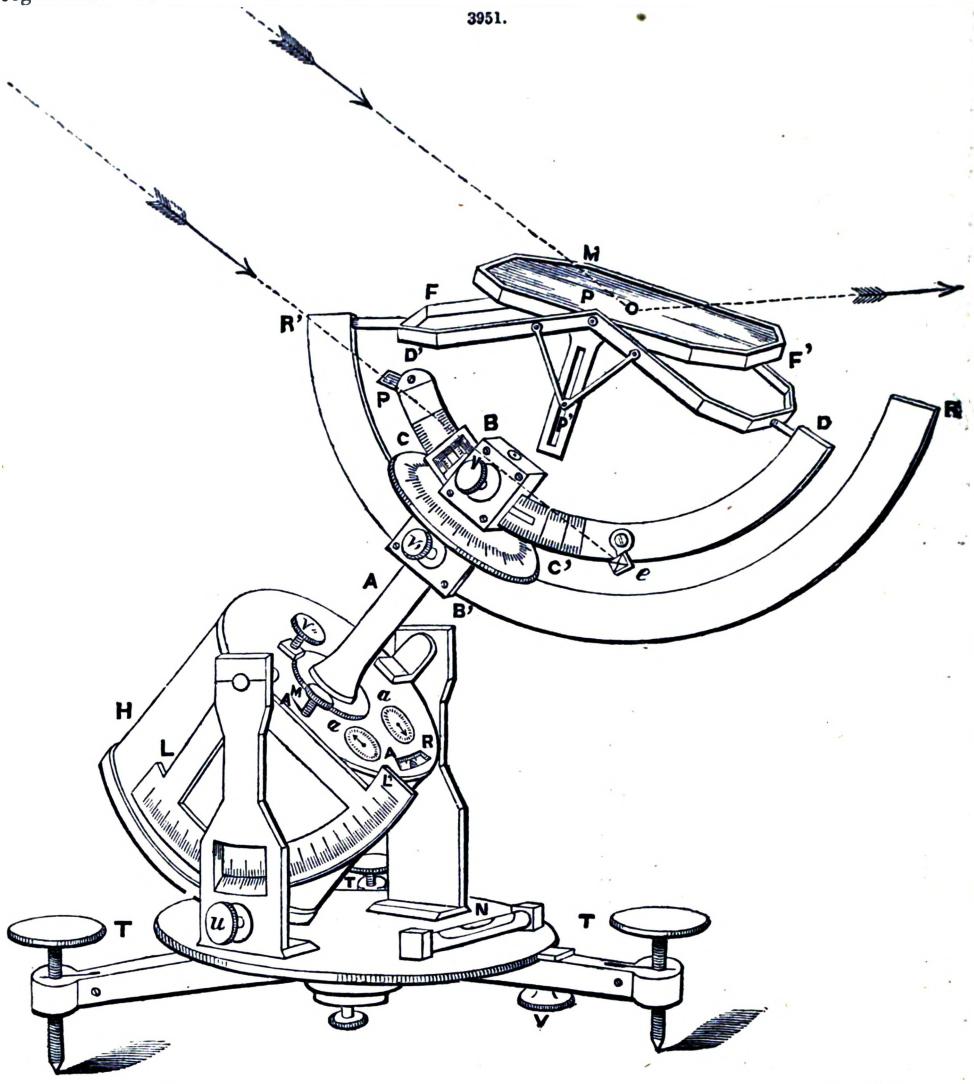

the meridian by means of setting the time-piece correctly, making the arc B D equal to the complement of the declination, and by turning then the apparatus upon its base-plate until the ray of the sun is seen to pass from *e* to P. A similar arrangement is adopted in M. Foucault's heliostat, and may be fixed to all other ones. Fig. 3951 is of a heliostat made by Elliott Bros., London.

HELIX. Fr., *Hélice*; Ger., *Schraubenlinie, Spirale*; Ital., *Elice*; Span., *Hélice*.

A helix is a curved line of double curvature, a spiral line, as of wire in a coil. A knowledge of twisted surfaces, that have helices to guide the generating straight line, is indispensable in designing *screw-propellers*. The equations of the helix are $x = a \cos \frac{z}{h}$ and $y = a \sin. \frac{z}{h}$; x, y, z, being the co-ordinates of any point in the twisted surface. See Archimedian Screw.

HINGING. Fr., *Ficher*; Ger., *Aufhänger, durils ein Gelenk verbinden*; Ital., *Gangherare*; Span., *Embisagrado*.

Hinging is the art of connecting two pieces of metal, wood, or other material together, such as a door to its frame; the connecting ligaments that allow one or other of the attached substances to revolve are termed hinges. There are many sorts of hinges, among which may be mentioned, butts, chest hinges, coach hinges, rising hinges, casement hinges, garnets, scuttle hinges, desk hinges, screw hinges, back-fold hinges, centre-point hinges, and so on. To form the hinge of a highly-finished snuff-box requires great mechanical skill; but few of the best jewellers can place a faultless hinge in a snuff-box.

There are many varieties of hinges, and hence there are many modes of applying them, and much dexterity and delicacy are frequently required. In some cases the hinge is visible, in others

it is necessary that it should be concealed. Some hinges require not only that the one hinged part should revolve on the other, but that the movable part shall be thrown back to a greater or lesser distance. Figs. 3952 to 3998 exhibit a great variety of methods of *hinging*.

Fig. 3952 shows the hinging of a door to open to a right angle, as in Fig. 3953. Figs. 3954, 3955, and Figs. 3956, 3957, show modes of hinging doors to open to an angle of 90°. Figs. 3958, 3959, show a manner of hinging a door to open at right angles, and to have the hinge concealed.

3952.

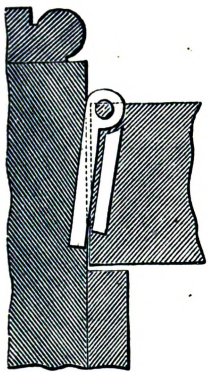

3953.

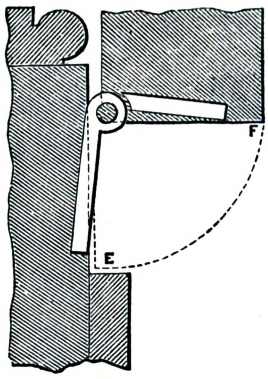

3954.

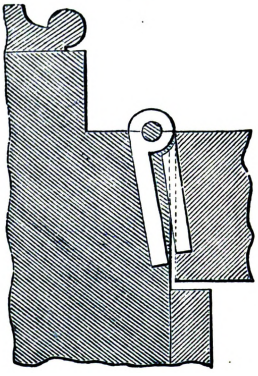

3955.

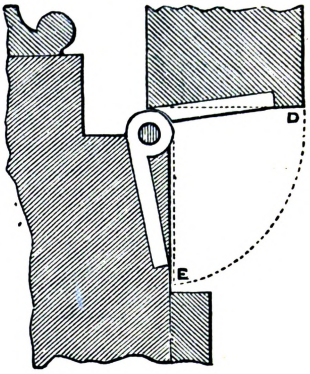

3956.

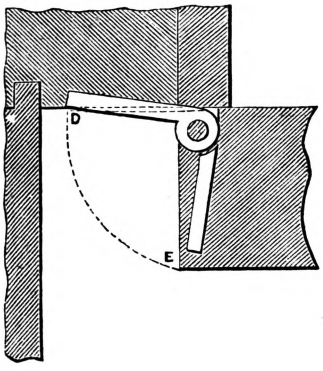

3957.

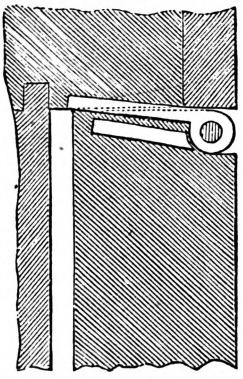

3958.

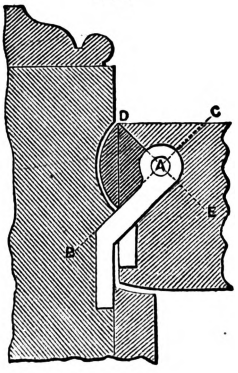

3959.

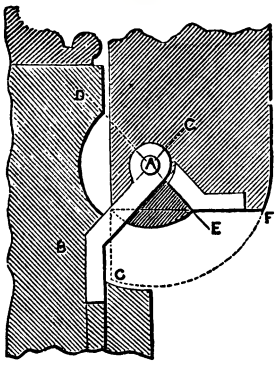

3960.

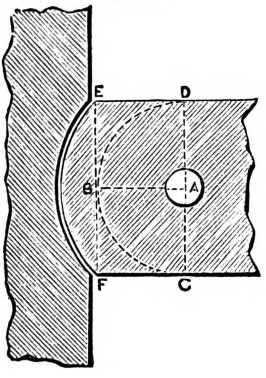

3961.

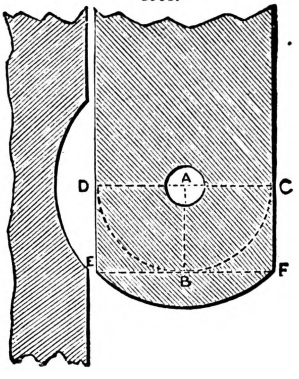

The segments are described from the centre of the hinge A, and light portion requires to be cut out to permit the passage of the leaf of the hinge A B. Figs. 3960, 3961, illustrate an example of a centre-pin hinge, the door opening either way, and folding back against the wall in either direction. Draw E F at right angles to the door, and just clearing the line of the wall, which represents the plane in which the inner face of the door will lie when folded back against the wall in either direction. Bisect E F in B; draw A B perpendicular to E F, which make equal to E B or B F, then A is the position of the centre of the hinge.

To find the centre of the hinge, Figs. 3962, 3963; draw A D, making an angle of 45° with the inner edge of the door, and A B parallel to the jamb, meeting D A in A the centre of the hinge; the door, in this case, will move through a quadrant D C.

Figs. 3966, 3967, are of another variety of centre-pin hinging, opening through a quadrant. The distance of A from B C is equal to half B C. In this, as in a previous case, there is a space between the door and the wall when the door is folded back. In Figs. 3962, 3963, as well as in Figs. 3966, 3967, there is no space left between the door and the wall.

Fig. 3964; bisect the angle at D by the line D A; draw E C and make $C F = \frac{3}{2} D E$; draw F G at right angles to C E, and bisect the angle G F C by the line B F, meeting D A in A; then A is the centre of the hinge. Fig. 3965 shows, when the door, Fig. 3964, is folded back, that the point C falls on the continuation of the line G F.

3962.

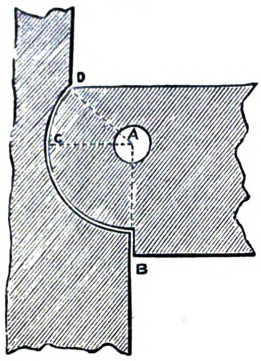

3963.

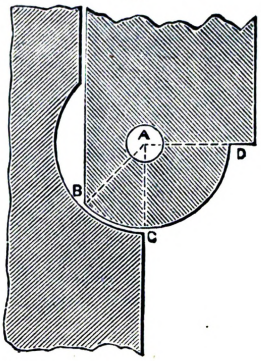

3964.

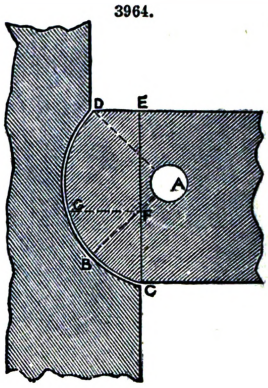

3965.

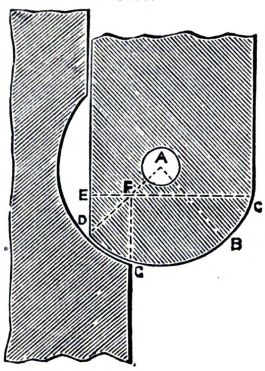

3966.

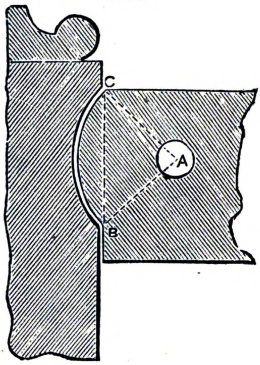

3967.

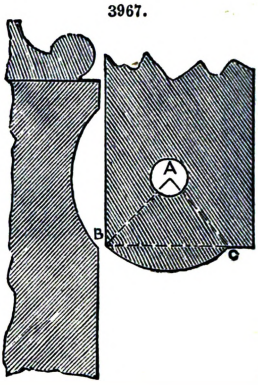

3968.

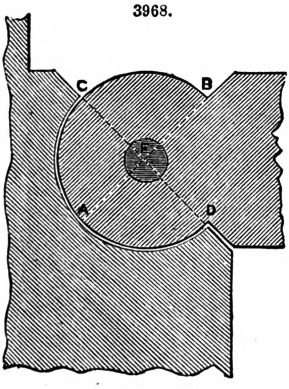

3969.

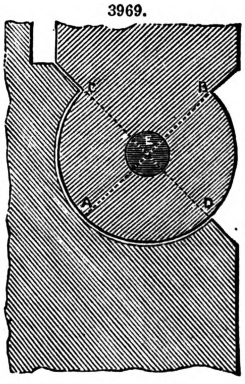

3970

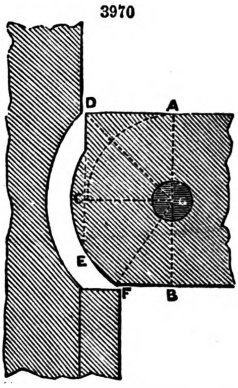

Figs. 3968, 3969; Figs. 3970, 3971; Figs. 3972, 3973; and Figs. 3974, 3975, are examples of centre-pin joints, and require no particular or detailed describing.

Figs. 3976 to 3978 are of a hinge, the flap of which has a bead B closing into a corresponding hollow, so that the joint cannot be seen through.

Figs. 3979 to 3981 show a hinge *b a* let equally into the styles, the knuckles of which form a part of the bead on the edge of the style B. In this case the beads on each side are equal and opposite to each other, with the joint-pin in the centre.

In the example, Figs. 3982 to 3984, the knuckle of the hinge forms a portion of the bead on the

3971.

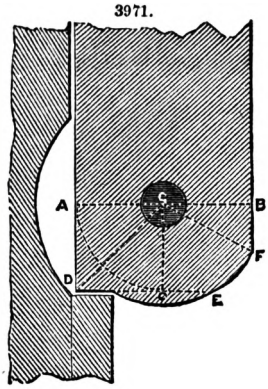

3972.

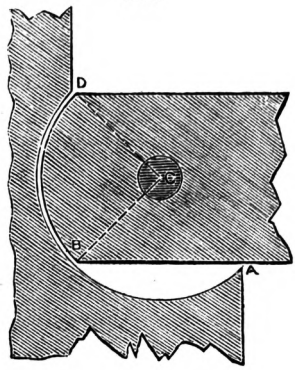

3973.

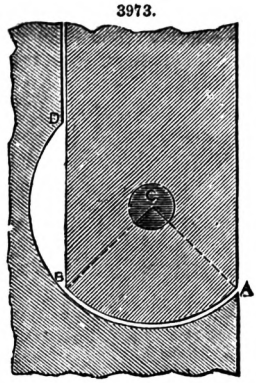

3974.

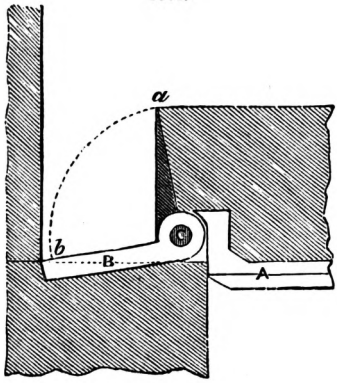

3975.

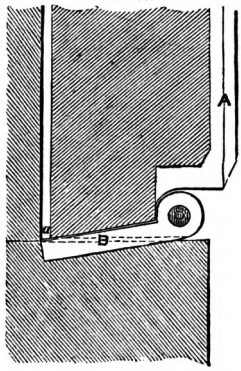

3976.

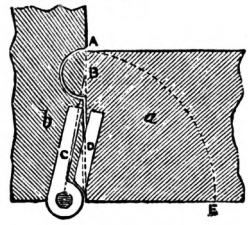

3977.

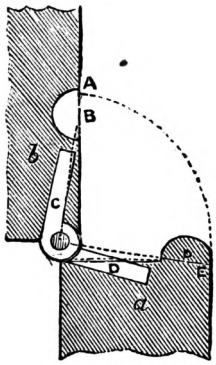

3978.

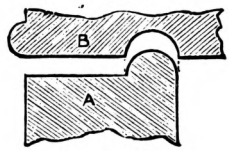

3979.

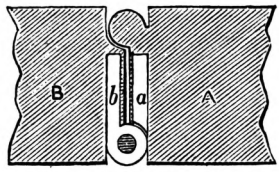

3980.

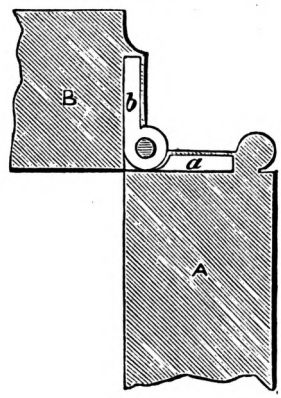

3981.

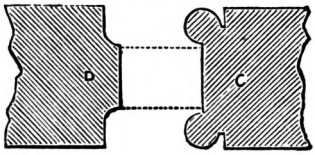

3982.

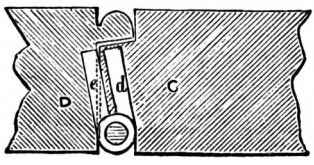

3983.

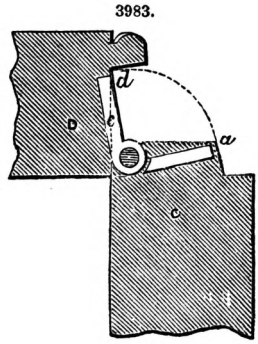

3984.

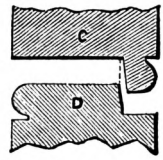

style C, and is equal and opposite to the bead of the style D. In Figs. 3985 to 3987, the beads are not directly opposite to one another.

Fig. 3988 exhibits the hinging of a back flap when the centre of the hinge is in the middle of the joint.

3985.

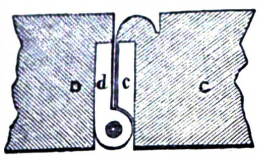

3986.

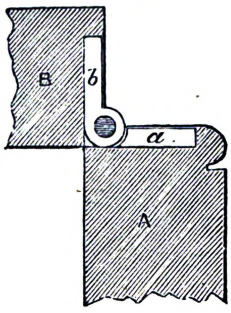

3987.

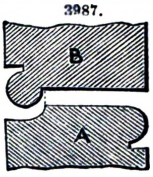

3988.

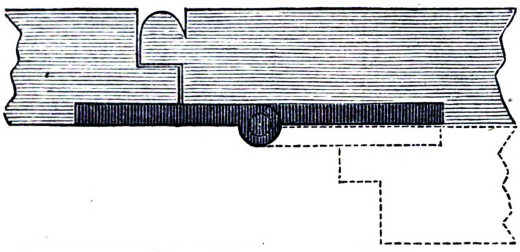

3989.

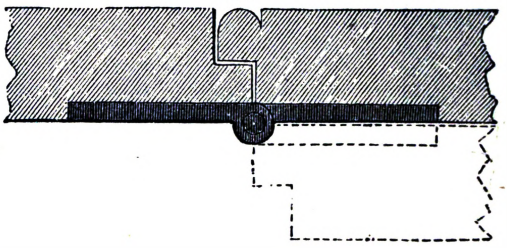

3990.

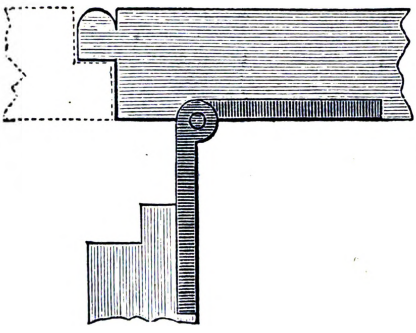

3991.

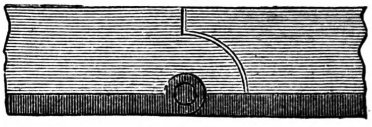

3992.

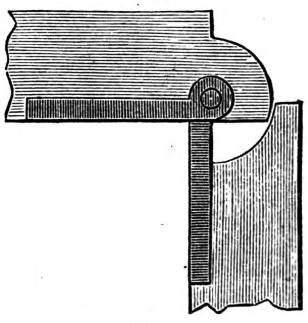

3993

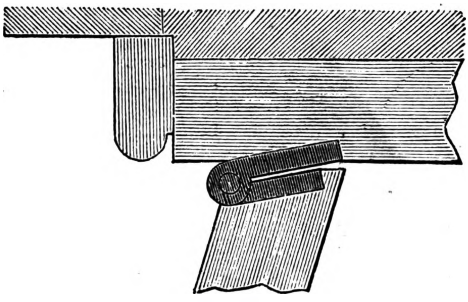

3994.

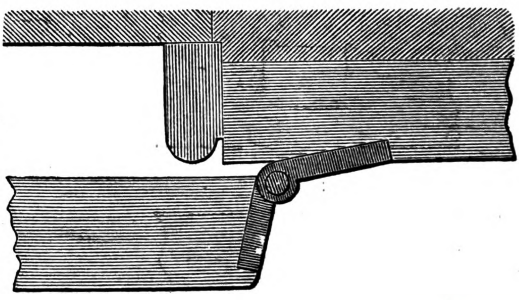

Figs. 3989, 3990, relate to the manner of hinging a back flap when it is necessary to throw the flap back from the joint. An example of a rule-joint is given, Figs. 3991, 3992.

Figs. 3993, 3994, point out or define the ordinary mode of hinging shutters to sash-frames.

Figs. 3995, 3996, illustrate a method of hinging employed when the flap on being opened has to be at a distance from the style. This method of hinging is used on the doors of pews, to throw the opening flap or door clear of the mouldings.

3995.

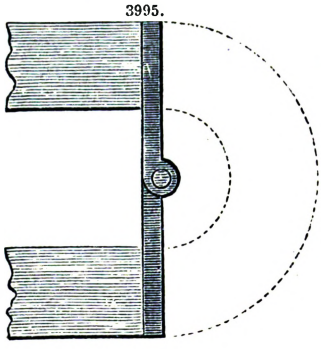

3996.

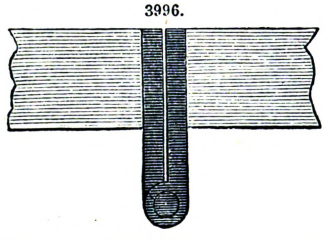

3997.

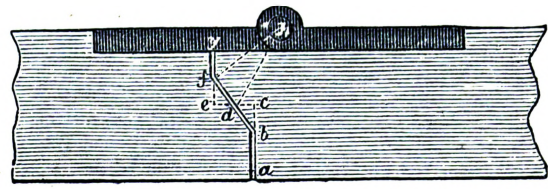

3998.

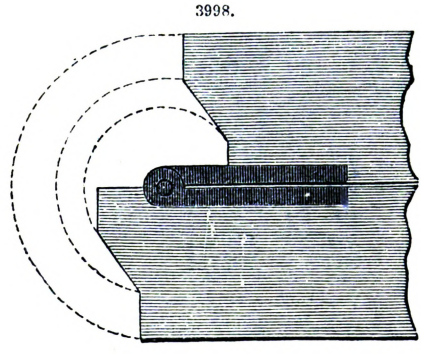

Figs. 3997, 3998, show the manner of finding the rebate when the hinge is placed on the contrary side. Let *h* be the centre of the hinge, *y e* the line of joint on the same side, *a c* the line of joint on the opposite side, and *e c* the total depth of the rebate. Bisect *e c* in *d*, and join *d h*; on *d h* describe a semicircle cutting *y e* in *f*, and through *f* and *d* draw *f b*, cutting *a c* in *b*, and join *a b*, *b f*, and *f y*, to complete the joint.

HOE. Fr., *Houe*; Ger., *Hacke*; Ital., *Zappa*; Span., *Azadon*.

No peculiar mechanical skill is employed to form a *hoe*, which is an instrument for cutting up weeds and loosening the earth; it is composed of a plate of iron, with a handle, which is set at an acute angle with the plate. See Hand-Tools, p. 1834.

HOIST. Fr., *Élévateur*; Ger., *Aufzug*; Ital., *Verricello, monta sacchi*; Span., *Aparejo para elevar*.

See Lifts; Hoists; and Elevators.

HOP-ELEVATOR. Fr., *Elévateur à houblon*; Ger., *Elevator für Hopfen*; Ital., *Montaluppolo*; Span., *Elevador de lúpulo*.

See Lifts, Hoists; and Elevators.

HORSE-POWER, or Horse-Engine.

A *horse-power*, or, more properly speaking, a horse-engine, operated by one horse or more, is a machine generally employed to convert a slow motion into a rapid one, it effects the lighter operations of grinding, polishing, or pulverizing. There are many kinds of those easily-formed contrivances; the well-known *horse-power*, invented by that ingenious mechanic, the late James Bogardus, of New York, is very complete. See Agricultural Implements, p. 12. Arrastre, p. 142.

HORSE-POWER (HP.) *and other Units of Work.* Fr., *Cheval de force, et d'autre unités des travails mécaniques*; Ger., *Pferdekraft und andere Krafteinheiten*.

A horse-power is a unit or standard of work by which the capabilities of steam-engines and other prime-movers are measured; in England a horse-power is estimated 33,000 lbs. raised 1 ft. in a minute. 33,000 units of work a minute is = 550 units of work a second. One HP., or one *Force de Cheval* French measure, is equal to 75 kilogrammes raised a mètre in the direction of the plumb-line in a minute. 366 *Force de Cheval* is very nearly equal to 361 HP British. See Algebraic Signs, p. 43. Belts. Boiler, p. 425. Brake, p. 597. Details of Engines. Dynamometer Car. Gunnery, p. 1744. Indicators.

HOT-BLAST STOVES. Fr., *Appareil à air chaud*; Ger., *Winderhitzungsapparat*; Ital., *Calorifero*; Span., *Calorífero termodinámico*.

See Iron.

HOWITZER. Fr., *Obusier*; Ger., *Haubitze*; Ital., *Obice*; Span., *Obus*.

A short, light, peculiarly-formed cannon is termed a *howitzer*; it has a chamber, and is intended to throw large projectiles with comparatively small charges; it is sometimes so short that the projectile, when hollow, can be put in its place by hand.

HUB. Fr., *Moyeu*; Ger., *Nabe*; Ital., *Mozzo*; Span., *Cubo*, or *pina*.

A *hub* is a projection on a wheel for the insertion of a pin; as a crank-pin *hub*. This term is often written *hob*.

HYDRANT. Fr., *Tuyau d'alimentation hydraulique*; Ger., *Hydrant*; Ital., *Ramo di tubo*; Span., *Boca de agua*.

See Hydraulic Machines, *Varieties of*.

HYDRAULICS. Fr., *Science hydraulique;* Ger., *Wassermaschinenkunde;* Ital., *Idraulica;* Span., *Hidráulica.*

Hydraulics is that department of engineering which treats of fluids in motion, especially of water, which in motion presents itself in four different ways; as passing out of a reservoir; flowing in a bed; acting as a motor; and in a passive state raised by machines.

There are two quantities to be found in all calculations relating to this science—the weight of water and the intensity of gravity. These quantities are variable, but almost always supposed constant. What follows will enable us to judge of the error which may result from this supposition.

When water is entirely pure, and is taken at its *maximum* density, it weighs 62·4491 lbs. a cubic foot: such is its *specific weight.* It may vary from three causes. The most powerful is the temperature. We know that heat expands bodies, and this diminishes their density or specific weight. From accurate experiments, the density of pure water, at different degrees of Centigrade and Fahrenheit thermometers, would be as indicated in the following Table;—

Temperature.		Weight of a cubic mètre.	Weight of a cubic foot in lbs.	Temperature.		Weight of a cubic mètre.	Weight of a cubic foot in lbs.
Centigrade.	Fahrenheit.			Centigrade.	Fahrenheit.		
		kil.				kil.	
4	$39\frac{1}{2}$	1000·	62·449	20	68	998·24	62·339
6	$42\frac{4}{5}$	999·95	62·446	25	77	997·99	62·268
8	$46\frac{2}{5}$	999.87	62·441	30	86	995·73	62·182
10	50	999·72	61·432	50	122	987·58	61·673
12	$53\frac{3}{5}$	999·54	62·420	100	212	956·70	59·745
15	59	999·14	62·396				

Below 4° Centigrade or 39° Fahrenheit, the density, instead of continuing to increase, diminishes; this diminution, at first very slow, rapidly progresses towards the limit of congelation, and the weight of a cubic foot of ice is only 58·078 lbs.

The effects of pressure are much less sensible. Water was, for a long time, considered wholly incompressible; but experiments have shown that, under very heavy loads, it is really compressed, although but a very small quantity; about 0·000046 of its volume under the weight of one atmosphere; that is, under a pressure represented by the height of a column of mercury in a barometer, a height estimated at 29·922 in., and which is equivalent to the height of a column of water about 33·793 ft. But as, in common practice, we shall not have to calculate upon such depths or heights of water, we may, without sensible error, entirely neglect the effects of pressure.

What proceeds from saline or earthy substances contained in the waters which run on the surface of the globe, may also, in most cases, be omitted, the specific weight of the water of rivers being only one or two ten-thousandths greater than that of distilled water, which is taken as the standard of perfectly pure water. Professor Boisgaraud found, by many trials, made with great care, 1000ᵏ·149 for the specific gravity of the water of the Garonne, that of distilled water being 1000 kilogrammes to the mètre, or 62·449 lbs. to the cubic foot. Brisson has nearly an equal result for the Seine. Moreover, a mass of water, when surrounded by air, loses, like all other bodies, a part of its weight equal to the weight of air whose place it occupies; and this loss, which is seldom below $\frac{10}{100000} = \cdot00010$, may be even $\frac{13}{100000} = \cdot00013$.

Finally, in our mean temperatures, and according to different circumstances, the weight of a cubic foot of water will be only from 62·35 lbs. to 62·39, or the cubic mètre from 998ᵏ·4 to 999ᵏ. We shall, however, constantly admit 1000ᵏ, this value rendering the conversion of cubic mètres of water into kilogrammes, and *vice versâ*, extremely easy.

Experiments made at the observatory of Paris, gave $0^m \cdot 9934 = 39 \cdot 128$ in., or 3·2606 ft., for the length of a pendulum vibrating seconds, this length being reduced to the level of the sea. Whence we conclude that, in that place, a heavy body descends $4^m \cdot 9044 \left(= \frac{1}{2} \times 0 \cdot 99384\pi^2\right) = 16 \cdot 091$ ft., during the first second of its fall. If, at the end of that time, gravity ceased to act upon it, it would continue to descend, but with a uniform motion, running through double the space, or 32·182 ft. a second; this number, which expresses the velocity impressed by gravity in the unit of time, represents, for Paris, the intensity of that accelerating force; we generally designate that intensity or velocity by g, the initial letter of the word *gravity.* (See our article Gunnery.) g augments with the latitude, and diminishes with the elevation above the level of the sea, and generally we have the empirical formulas;—

$$\text{In feet} \quad \left\{ g = 32^{ft} \cdot 16954 \left(1 - 0 \cdot 00284 \cos. 2l\right) \left(1 - \frac{2e}{r}\right), \right.$$

$$\text{In mètres} \quad \left\{ g = 9^m \cdot 8051 \left(1 - 0 \cdot 00284 \cos. 2l\right) \left(1 - \frac{2e}{r}\right), \right.$$

l being the latitude of the place, e its elevation above the level of the sea, r the radius of the terrestrial spheroid at the level of the sea in that place;—

$$\{ r = 6366407^m \left(1 + 0 \cdot 00164 \cos. 2l\right) \} = 20887510 \text{ ft.} \left(1 + 0 \cdot 00164 \cos. 2l\right).$$

Thus, at Toulouse, where $l = 43°\ 36'$ and $e = 146^m = 479$ ft., we have $g = 9^m \cdot 8032 = 32 \cdot 1633$ ft.; at Montlouis, where $l = 42°\ 30'$ and $e = 1620^m = 5315$ ft. (the mean height of the barometer being 29·72 in.) (Journal des Mines, tom. 23, p. 318), $g = 9^m \cdot 7977 = 32 \cdot 1453$ ft.

Notwithstanding these variations, for the want of knowing better, we take $g = 9^m \cdot 8808 = 32 \cdot 1817$. However, according to the examples we have just seen, the results of calculations into which this quantity shall enter, may be in error, even for France, more than one-thousandth.

The value of g will very often appear under two forms, of which we give the origin.

According to the first principle of the fall of heavy bodies, and of uniformly accelerated motion in general, the velocities acquired are as the times occupied in acquiring them, so that if v is the velocity acquired by a body at the end of the time t, g being, as we have just seen, the velocity acquired in 1″, we shall have $v : g :: t : 1$, or $v = gt$.

According to the second principle, the spaces passed through, or the heights of the falls, are as the squares of the times occupied in passing through them, then if h is the height through which the same body has fallen in the time t, $\frac{1}{2}g$ being the fall corresponding to 1″, we shall have

$$h : \tfrac{1}{2}g :: t^2 : (1'')^2, \text{ or } h = \frac{g t^2}{2}.$$

Taking the value of t in this latter equation, and substituting it in the first, we have

$$v = \sqrt{2gh}, \text{ and consequently } h = \frac{v^2}{2g}.$$

Since $g = 9^m \cdot 8088 = 32 \cdot 182$ ft., $\sqrt{2g} = \sqrt{64 \cdot 364} = 8 \cdot 0227$, and $\frac{1}{2g} = \cdot 015536$.

Consequently, $v = 8 \cdot 0227 \sqrt{h}$; and $h = \cdot 015536\, v^2$.

We call v *the velocity due to the height* h, *and* h *the height due to the velocity* v.

The Greek letter π, which we have employed in other places, as it expresses the ratio of the circumference to the diameter (3·1416), it has no other acceptation in this article. The fourth of that quantity (·7854), which is the ratio of the circle to the circumscribed square, presenting itself very frequently in calculations, we shall designate by π'.

General Principles.—Let X, Fig. 3999, be a vessel kept constantly full of water up to A B. If on the horizontal faces C D and E F are made the orifices M and N, the fluid will pass out in the form of vertical jets, which will rise nearly to the level A K of the water in the reservoir, they would quite attain that level, if certain causes, to be investigated in the sequel, opposed no obstacle.

3999.

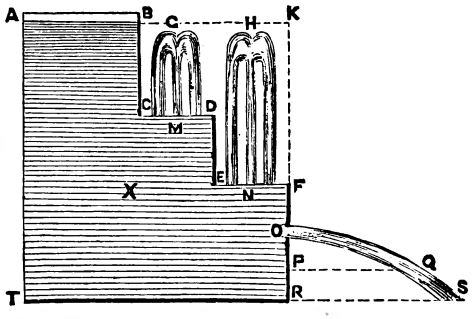

Now, from the first principles of dynamics, in order that a body thrown vertically may attain a certain height, it is necessary that at its point of departure it receive a velocity equal to that which it would have acquired by falling freely from the same height. Consequently, since the fluid particles which pass from the orifices M and N are raised to the respective heights M G and N H on passing out, they must have been impelled with velocities due to those heights, which are the heights of the surface of the reservoir above the orifices. In like manner, if on a vertical face F R an opening O be made, we shall hereafter see that, according to the respective values of the lines O P and P Q, the fluid passes out at O with a velocity due to the height O K. It would pass out with a velocity due to K R, if the orifice were opened on the bottom R T of the vessel.

It will always be thus with these different orifices, whatever be their magnitude compared to the transverse section of the vessel, provided, however, that the fluid surface, preserving a constant level, remain even and *tranquil*; a condition which could not be fulfilled, if the size were very large, the water flowing out producing violent commotion in the vessel.

Generally, and making abstraction of every obstacle or all cause of perturbation, *the velocity of a fluid, at its passage through an orifice made in the side of a reservoir, is the same as a heavy body would acquire in falling freely from the height comprised between the level of the fluid surface in the reservoir and the centre of that orifice.*

This theorem, known under the name of Torricelli's theorem, was established and published by that celebrated philosopher in 1643, as a consequence of the laws of the fall of heavy bodies.

If we designate by v the velocity of issue, and by H the height or head of water in the reservoir, it will give $v = \sqrt{2gH}$.

We have just seen that water passing from the openings M and N did not quite attain the level of the fluid in the reservoir. If to these openings we adapted two perfectly equal tubes, the water would rise still less high; but the diminution of height would follow exactly the same ratio. For example; if the jet which issues from the tube at M were only two-thirds of M G, that which would pass from the tube at N would be only two-thirds of N H. In general, let n be the ratio between the height of the jet and that of the reservoir for a tube of a certain form, H and H′ two heights of the reservoir, and v and v' the corresponding velocities, we shall have

$$v = \sqrt{2gnH} \text{ and } v' = \sqrt{2gnH'}: \text{ whence } v : v' :: \sqrt{H} : \sqrt{H'};$$

that is to say, the openings being of the same form, *the velocities are always as the square roots of the heads.*

Experiments made by Mariotte, and repeated a hundred times since, leave no doubt as to this principle. We will here give the results of some of them; this will fix the degree of confidence with which the principle may be received; other details from the series of experiments which furnished these will be given presently. The first series was made by M. Castel and D'Aubuisson; the second, by Bossut; the third and fourth, by Michelotti; and the last, by MM. Poncelet and Lesbros.

Diameter of Orifice.	Head of Orifice.	Series of	
		Square roots of Heads.	Discharges or Velocities.
inches.	inches.		
0·3937	1·024	1·000	1·000
	1·181	1·074	1·064
	1·575	1·241	1·244
	1·969	1·386	1·393
	2·362	1·519	1·524
. . . . .	. . . . .	. . . . .	. . . . .
	feet.		
1·063	4·265	1·000	1·000
	9·580	1·500	1·497
	12·500	1·713	1·707
. . . . .	. . . . .	. . . . .	. . . . .
3·189	7·677	1·000	1·000
	12·500	1·305	1·301
	22·179	1·738	1·692
. . . . .	. . . . .	. . . . .	. . . . .
6·378	6·923	1·000	1·000
	12·008	1·316	1·315
	. . . . .	. . . . .	. . . . .
squares.	1·312	1·000	1·000
—	2·297	1·323	1·330
$7\frac{1}{8}$ in.	2·281	1·581	1·590
by	4·265	1·803	1·806
$7\frac{1}{8}$ in.	5·249	2·000	2·000

It will be remarked that the heads were varied in the ratio of 1 to 200 and more, and the sections of the orifices from 1 to 500; and yet, in all, the velocities followed the ratio of the square roots of the heads; the small differences which are seen, sometimes in excess, sometimes deficient, may be neglected;—small errors are inevitable in such experiments. Their direct object was the determination of the discharges; but it is evident that when the orifice is the same, the discharge varies only with the velocity, that it is exactly proportional to it. and that the series of ratios of one is also the series of ratios of the other.

The general principle that the velocities are as the square roots of the heads, as well as the theorem of Torricelli for cases where it is applicable, extends to fluids of all kinds; to mercury, oil, and even aëriform fluids. So that the velocity with which each of them passes an orifice, is independent of its nature and of its density: it depends only on the head; experience proves it.

Simple reasoning, also, can show that it must be so. Take mercury, for example; the particles placed before the orifice, and on which it is necessary to impress a certain velocity, are, it is true, fourteen times more dense than those of water, and therefore they oppose fourteen times as much resistance to motion; but as the mass which presses, and which produces the velocity of passing out (being about fourteen times greater), exerts a motive effort fourteen times greater, there is a compensation, and the impressed velocity remains the same.

To the pressure which a fluid contained in a vessel exerts by its weight on the orifice of exit, may be added a foreign pressure, and the velocity of flowing is augmented. What will be its increase and its definite value?

Let P be the weight of body which produces the pressure, and s the fluid surface or portion of the fluid surface on which it immediately acts, namely, that which is in contact with it; h the elevation of that surface above the orifice, and p the weight of a cubic foot of the fluid contained in the vessel. For the given body substitute, in imagination, a column of that fluid, which would have s for its base, and whose height h' would be such that the weight of the column would be equal to that of the body; we should thus have $P = p\,s\,h'$ from which to deduce h'; substituting thus one body for another of equal weight, we should not change the pressure experienced by the particles contained in the vessel. Suppose, further, that after having withdrawn the body, we add in the vessel (whose sides we may suppose to be prolonged to an indefinite height) a quantity of the same fluid as that already contained, until its level has attained the summit of the column; according to the laws of hydrostatics, all the mass of the fluid added would only produce a pressure equivalent to that of a single column; so that the particles situated before the orifice would experience a pressure exactly equal to what they first experienced, and will always tend to pass out with the same velocity. Now, in the new state of things, the height of the reservoir above the orifice, the height generating the velocity of exit, is evidently $h' + h$, and consequently this velocity will be $\sqrt{2g(h' + h)}$.

Take, for example, a vessel closed on all sides and filled with alcohol, whose specific gravity is 0·837; on the cover is a circular opening of $1\frac{1}{4}$ in. diameter, in which is a piston loaded with 18 oz.; the orifice of exit is 10 in. beneath that opening. To determine the velocity with which the alcohol will run out. We admit that the friction of the piston on the edges of the opening is balanced by the weight of the piston itself.

We then have P = 18 oz. = 1·125 lb.; $s = \cdot7854 \times (1\cdot25)^2 = 1\cdot227$ sq. in. = ·0085 sq. ft.; $p = \cdot837 \times 62\cdot429 = 52\cdot271$ lbs. and $h = 10$ in. = ·833 ft.; for h', the equation $P = p\,s\,h'$ or $1\cdot125 = 52\cdot271 \times \cdot0085\,h'$, gives 2·5329 ft. Thus the alcohol will issue with a velocity of

$$\sqrt{2g(2\cdot5329 + \cdot833)} = \sqrt{64\cdot364 \times 3\cdot3659} = 14\cdot718 \text{ ft.}$$

If the vessel were not kept constantly full, this velocity would gradually diminish.

After having given the expression of the velocity with which any fluid issues from an orifice, we pass to the use made of it in determining the discharge.

We call the *discharge* of an orifice the volume of fluid which runs out of it in the unit of time, the second.

If the mean velocity of all the fluid particles were that due to the whole head H, this velocity, which is then called *theoretic velocity*, would be $\sqrt{2gH}$; if, at the same time, the particles passed

out from all points of the orifice, and in parallel lines, it is evident that the volume of water running out in one second would be equal to the volume of a prism which had the orifice for a base, and that velocity for its height; it would be, calling S the area or section of the orifice, $S\sqrt{2gH}$. This is the *theoretic discharge.*

But the *actual discharge* is always less.

To give an accurate idea of the state of things, let us consider the fluid vein a little after its passage from the orifice, and let us cut it by a plane perpendicular to its direction. It is manifest that the discharge will be equivalent to the product of the section by the mean velocity of the lines, at the instant of their crossing the section: if this section were equal to that of the orifice, and if this velocity be equal to that due to the head, the actual discharge would be equal to the theoretic discharge. But it happens, either that the section of the vein is sensibly smaller than that of the orifice, as in flowing through orifices in a thin side, or that the velocity at the section is sensibly less than that due to the head, as in cylindrical tubes; or even that there is a diminution both in the section and in the velocity, as in certain conical tubes. So that the actual discharge will, in all these different cases, be less than the theoretic; and in order to reduce the theoretic to the actual, it must be multiplied by a fraction. If m represent that fraction, and Q the actual discharge, we shall have $Q = mS\sqrt{2gH}$.

Designating by Q′ the volume of water flowing in any time T, we should also have

$$Q' = mST\sqrt{2gH}.$$

Whether the diminution in the discharge proceed from a diminution in the section of the vein, or from a diminution in the velocity, it is always a consequence of the contraction which the vein experiences on passing through the orifice; thus the multiplier m, *or coefficient of reduction of the theoretic discharge to the actual discharge,* is commonly called *the coefficient of the contraction of the fluid vein,* or simply, *coefficient of contraction.* Its determination is one of very great importance; on its accuracy depends that of the results obtained when the formula for the flow of fluids is applied to practice; it has also been the great object of the experimental researches of hydraulicians. We will make known the results to which they have arrived, after making some preliminary observations.

On Contraction and its Effects.—Take a transparent vessel, Figs. 4000, 4001, let water flow through an orifice in its side, and make the motion of the particles of the fluid visible by mixing with them small substances of a specific gravity about equal to that of the water, such as saw-dust of certain kinds of wood; or, better still, by introducing light chemical precipitates, such, for example, as take place when drops of the solution of nitrate of silver are poured into water slightly salted; at a small distance from the orifice, say from 1 in. to 1½ in. for an orifice of ½ in. diameter, the fluid particles directed from all parts towards the orifice are seen to describe curved lines, and to terminate by passing towards the orifice with a very accelerated motion, as towards a centre of attraction.

4000.

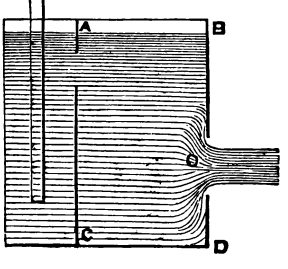

4001.

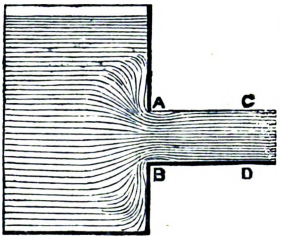

The convergence of the directions which they take in the interior of the vessel, on the instant of their arrival at the orifice, still continues for a little distance after they have passed through it, so that the fluid vein, at its passage from the orifice, is gradually contracted up to a point where its particles, by the effect of their reciprocal action, and of the motions impressed upon them, take a parallel direction, or other directions. The vein thus forms a kind of truncated pyramid or cone, whose greater base is the orifice, and whose smaller is the fluid section at the point of greatest contraction—a section which is often called *the section of the contracted vein.* This figure, and all the phenomena of contraction, are thus a consequence of the convergence of the lines, when they arrive at the orifice, or of the obliquity of the direction of some in respect to others.

When the orifice is in a thin side, the contraction takes place below the plane of that orifice; it is *exterior;* it is seen; its dimensions can be measured, and they have actually been measured. We shall soon tell what has been done in this respect; we shall here simply remark that in circular orifices beyond the section of the greatest contraction and up to a certain distance, the vein continues in the form of a cylinder, of which that section would be the base, and with a velocity nearly that due to the height of the reservoir. The discharge, then, will be the product of that section by that velocity; so that the contraction will be limited to reducing the section which is to enter into the expression of the discharge. The flowing takes place as if, for the real orifice, another had been substituted, of a diameter equal to that of the contracted section, and as if there had been no contraction.

If to the orifice A B, a cylindrical tube A B C D be fitted, the fluid lines will arrive at A B converging, and consequently the fluid will be contracted at the entrance of the tube. Experiments, to be given hereafter, will indicate that the contraction there is equal to that which takes place in orifices with thin sides; it would be only *interior* in relation to the mouth of the outlet. Moreover, beyond the contracted section, the attraction of the sides of the tube occasions a dilation of the vein; the threads are carried against the sides, they follow the sides, and pass out parallel

to each other, and to the axis of the tube; so that the section of the vein at its exit is quite equal to that of the orifice, but the velocity is not that due to the head of the reservoir. If the flowing were produced only by the simple pressure of the fluid contained in the reservoir, probably the velocity, at the section of greatest contraction, would be that due to the head, then it would diminish in proportion as the vein dilates, in virtue of the law or axiom of hydraulics, *when an incompressible fluid in motion forms a continuous mass, the velocity, at its different sections, is in the inverse ratio of the area of the section;* the diminution would cease when, the vein having attained the sides, its section would become equal to that of the orifice. Since m is the ratio of the section of greatest contraction to that of the orifice, the velocity along the sides, and consequently at the exit, would be $m\sqrt{2gH}$; and for the discharge we should have $S \times m\sqrt{2gH}$.

In orifices in a thin side, it was $mS \times \sqrt{2gH}$; thus the discharge would be the same in both cases; the only difference is, that in the latter the diminution would have affected the factor S, and in the tubes it would have fallen on the factor $\sqrt{2gH}$; that is to say, on the velocity. But the attractive action of the sides changes this state of things; not only does it cause the lines to deviate from their direction, but it also increases their velocity, so that the velocity of exit is greater than $m\sqrt{2gH}$; it will be $m'\sqrt{2gH}$, m' being a fraction greater than m; and the discharge will become $S \times m'\sqrt{2gH}$.

We see by this, that in cylindrical tubes and in ajutages generally, the effect of contraction is involved in that of the attraction of the sides. Without being able to assign what belongs to the first alone, we will remark that for every interior contraction there is a corresponding diminution of velocity, and every exterior contraction produces a diminution of section.

Let us examine the form which contraction gives to the fluid vein passing from an orifice. Take first the most simple case, that of a circular orifice in a thin and plane side.

The direction as well as the velocity of the particles at the different points of the orifice being symmetrical, the contracted vein must also have a symmetrical form, and consequently be a solid of revolution, a conoid. It is so in fact, and observations about to be reported give it the form represented by A B b a, Fig. 4002. Beyond a b the contraction ceases, and the vein continues under a form sensibly cylindrical for a certain length, and until it becomes entirely deformed, from the resistance of the air and other causes.

4002.

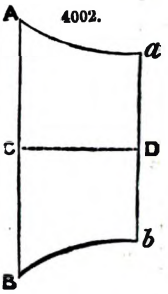

In the first part of that length it is full, clear, sometimes like a bar of the most beautiful crystal; then it becomes disturbed, and, examined in a strong light, it presents a series of swellings and contractions. From the very ingenious experiments of M. Savart, the appearance of continuity of the disturbed part is only an optical illusion, arising from the rapidity of the motions; this part consists of a series of distinct drops, alternately large and small, leaving between each other a space eight or ten times greater than their mean diameter, the form of which, oscillating round that of a sphere, is alternately an elongated and an oblate spheroid.

Boyle observed that the length of the clear part, as well as that of the swellings in the disturbed part, increased proportionally to the diameter of the orifice and the head; for the clear part, it was nearly $380\,d\sqrt{h}$ in mètres, or $209\,d\sqrt{h}$ in feet. The formation of drops, that is to say, their detachment from the clear part, is not, even in descending jets, an effect of the acceleration of velocity due to gravity; for it takes place equally in jets thrown upwards. It appeared to Savart to be an immediate effect of the oscillation which occurred in the fluid of the reservoir, in consequence of which the particles of the jet, being sometimes more and sometimes less pressed at their exit from the orifice, moved with a velocity alternately greater and less. D'Aubuisson discovered such alternations in most of the motions of fluids. He observed them also, in a very marked manner, during his experiments upon the resistance which the air experiences in conduit pipes.

M. Savart also showed the very singular influence of the waves of sound on the liquid veins; for example, if the disturbed part be received on the bottom of a vessel, there is heard a sound due to the impulse of successive drops; if then a note be produced on a violin in unison with this sound, the clear part of the jet is immediately seen to become shortened, and sometimes even to disappear entirely; the swellings of the troubled part become bigger and shorter, and the space which separates them is greater.

To return to the commencement of the jet, to the contracted vein properly so called, the conoid A B b a, Fig. 4002. Attempts have been made to determine its respective dimensions, and particularly the ratio between the diameters of the two bases, by direct measurements. Newton, who observed the phenomenon of contraction and its effects on the discharge, and first attempted such an admeasurement; he concluded that the ratio of the section of the orifice to the contracted section was that of $\sqrt{2}$ to 1, and consequently that of the diameter was as 1 to 0·841; but we believe that theoretical considerations, rather than a physical measurement, led him to adopt that result. Since then, several philosophers have made like measurements; thus A B being 1; Poleni found for a b 0·79; Borda, 0·804; Michelotti, 0·792; Bossut, from ·812 to ·817; Eytelwein, ·80; Venturi, ·798; finally, Brunaci, ·78. Nearly all these numbers, whose mean term is ·80, are very probably a little too large; they were found by measurements taken with callipers; if closed too much, the points were thrust into the body of the stream and the disturbance indicated it; but if too much open, the eye could not exactly appreciate how much it was so; hence an error in excess might be made, but not one in deficiency.

Michelotti the younger took up this question, which had already been treated by his father. Large jets obtained under great heads, gave him the following results.

Head above the Orifice in feet.	Diameter in inches.		Ratio between Diameters.	Distance from Orifice to Contraction, in inches.	Ratio of the Distance to the Contracted Diameter.
	At the Orifice.	At the Contraction.			
6·890	6·394	5·047	0·790	2·520	0·501
12·008	6·394	5·039	0·788	2·520	0·500
7·349	3·197	2·511	0·786	1·260	0·500
12·502	3·197	2·504	0·783	1·210	0·492
22·179	3·197	2·413	0·755	1·181	0·497

Abstracting the last number 0·755, which is entirely anomalous, the mean ratio between the two diameters is 0·787. From what has been said, we think it may be adopted, but only as a mean term; for, as we shall soon see, this ratio experiences variations, slight, to be sure, which depend upon the heads and the diameters of the orifices. The length of the contracted vein should be about half the diameter of the smallest section, or 0·39 of the diameter of the orifice. According to these experiments, the three principal dimensions, A B, *a b*, and C D, Fig. 4002, of the contracted vein would be respectively as the numbers 100, 79, and 39.

Eytelwein, chiefly increasing the last dimension, one very difficult to determine with accuracy, takes the numbers 10, 8, and 5; this ratio is quite generally admitted. As to the curves A *a* and B *b*, Michelotti refers them to a cycloid. In conclusion, the form of the fluid vein, at its passage from a circular orifice, has some resemblance to the bell-shaped end of a hunting horn.

The ratio between the diameters being 0·787, that between the sections will be the square of 0·787, or 0·619; thus, if *s* is the section of the contracted vein and S that of the orifice, we shall have $s = 0{\cdot}619\ \mathrm{S}$. From the explanations made, p. 1889, the discharge will be $s\sqrt{2gH}$ or $0{\cdot}619\ \mathrm{S}\sqrt{2gH}$. So that m, or the coefficient of contraction given by physical measurements of the vein, will be at a mean 0·619; and the measurements of the discharge indicate nearly the same.

If the velocity due to the head of the reservoir were really the *velocity at the passage* of the contracted section, and the flowing were produced through a tube which had exactly the form of the contracted vein, by introducing into the expression of the discharge the exterior orifice of that tube or *s*, the calculated discharge would be equal to the real discharge, and the coefficient for reducing one to the other would be 1. Michelotti, in one of his experiments, by employing a cycloidal tube, found it 0·984; it is probable that it would have come up to 1, if the sides of the tube had been more exactly bent to the curvature of the fluid vein; and if the resistance of the sides, as well as that of the air, had not slightly retarded the motion.

Orifices, whose perimeter is a polygon, or any figure other than a circle, do not present a form so simple, or leading to the same consequences.

The different parts of the orifices not being symmetrical, the fluid vein does not preserve the form which it had on coming out, and it changes from it continually as it removes from it. At its exit, the faces corresponding to the rectilinear sides of the orifice become more and more concave; the edges corresponding to the angles become truncated and terminate by disappearing. Thus Poncelet and Lesbros, having drawn, by aid of very exact means, the form of a vein which passed from a square orifice A C E G, Fig. 4003, whose sides were $7\frac{1}{2}$ in. under a head of $5\frac{1}{2}$ ft., had, at the distance of 5·9 in. from the orifice, the section *a c e g*; and at 11·81 in., the section *b' d' f' h'*.

4003.

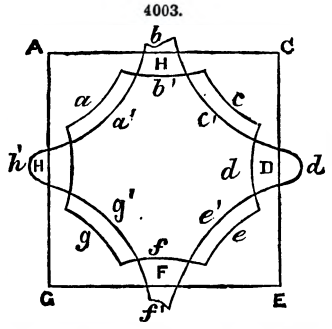

This last, one of the nine sections observed, was the smallest; its area was to that of the orifice in the ratio of 0·562 to 1, whilst that of the actual discharge to the theoretic discharge was found to be 0·605; they would have been equal, if the velocity of that smallest section had been due to the head of the reservoir.

Although the fluid particles at *b' c' d'*, &c., on this section, Fig. 4003, are those which came out at the points B C D, &c., of the orifice, and in removing from the reservoir have always remained on the line of intersection of the vein with the planes passing through its axis and those points respectively, it is nevertheless true that the section *b' d' f' h'* is a kind of square, the vertex of whose angles corresponds to the middle of the sides of the square of the orifice; and that the vein appears to have made an eighth of a revolution round its axis. A phenomenon of this nature is produced on all the veins which come out of an orifice not circular; it is called the *reversing of the vein*.

4004.

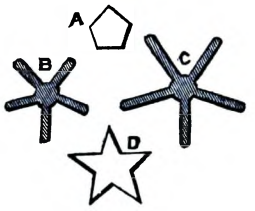

The orifice was a regular pentagon A, Fig. 4004, of 0·551 in. each side, made in a thin vertical plate of copper (the figure representing it, with its accessories, is one-quarter of the natural size); the flowing took place under a head of 6·463 ft. At the distance of 0·472 in., the section perpendicular to the axis of the vein was a quite regular decagon. At 1·181 in. was the greatest contraction or *first knot*. Beyond, the vein entirely changed its form; it presented five fluid plates, disposed symmetrically around the axis, as is seen in the section B, made 3·74 in. from the orifice; the planes of the blades passed through the centres of the sides of the orifice. Their breadth continued to increase up to the belly of the vein represented at C. Then it diminished, and the blades united anew in a *second knot*, at 2 ft. 10 in. from the orifice. Beyond, the vein was twisted and irregular.

For the rectilinear pentagon of the orifice were successively substituted pentagons with convex and concave sides, sides presenting salient and re-entering angles like the star D, and the vein always preserves the same form, the same five blades.

With orifices of six and eight sides, we had six and eight blades; and the reversing of the vein was a twelfth and sixteenth of the circumference. When the opening was a rectangle, narrow, and very long in the horizontal direction, at a certain distance, the vein consisted only of a broad vertical blade; the reversing seemed complete.

Often, beyond the second knot, the vein dilates again and divides a second time into the same number of blades; but their plane does not correspond to the middle of the sides of the orifice, but to the vertex of the angles; that is to say, the vein is again turned an equal quantity, or rather it returns to its place. The blades increase in breadth up to the second belly, and diminish again to form a third knot, beyond which sometimes there is still a new dilation, a third belly and a fourth knot.

Orifices in Thin Partitions.—We now come to the direct determination of the coefficient of reduction, from the theoretic to the actual discharge.

And we will measure with care the volume of water passing from a given orifice, under a constant head, and during a certain time; and we shall derive from it the product of the flow in one second or the actual discharge; we will divide it by the theoretic discharge corresponding to that orifice and to that head, and the quotient will be the coefficient sought.

Many hydraulic engineers have applied themselves to this investigation; D'Aubuisson gives, in the following Table, the principal results obtained up to the present time; those which appear to have been made under the most favourable circumstances, or which were generally admitted.

Circular Orifices.

Observers.	Diameter in inches.	Head in feet.	Coefficient.
Mariotti ..	0·268	5·873	0·692
„ ..	0·268	25·920	0·692
Castel	0·394	2·133	0·673
„	0·394	1·017	0·654
„	0·590	0·453	0·632
„	0·590	0·984	0·617
Eytelwein ..	1·027	2·372	0·618
Bossut	1·067	4·265	0·619
Michelotti ..	1·067	7·317	0·618
Castel	1·181	0·223	0·629
Venturi	1·614	2·887	0·622
Bossut	2·126	12·500	0·618
Michelotti ..	2·126	7·218	0·607
„ ..	3·189	7·349	0·613
„ ..	3·189	12·500	0·612
„ ..	3·189	22·179	0·597 ?
„ ..	6·378	6·923	0·619
..	6·378	12·008	0·619

Square Orifices.

Observers.	Side of square in inches.	Head in feet.	Coefficient.
Castel	0·394	0·164	0·655
Bossut	1·063	12·500	0·616
Michelotti ..	1·063	12·500	0·607
„ ..	1·063	22·409	0·606
Bossut	2·126	12·500	0·618
Michelotti ..	2·126	7·349	0·603
„ ..	2·126	12·566	0·603
„ ..	2·126	22·245	0·602
„ ..	3·228	7·415	0·616
„ ..	3·189	12·566	0·619
„ ..	3·189	22·376	0·616

Rectangular Orifices (Bidone).

Rectangle.		Head in inches.	Coefficient.
Height in inches.	Base in inches.		
0·362	0·728	13	0·620
0·362	1·457	13	0·620
0·362	2·909	13	0·621
0·362	5·818	13	0·626

The most remarkable of all these experiments, as well for the great size of the jets as for the greatness of the head, are those which Michelotti executed in 1764, at the fine hydraulic establishment constructed for that purpose at about two miles from Turin; the reservoir consisted of a tower 26 ft. 3 in. high, whose interior, which is a square of 3·182 ft. a side, receives through a canal the waters of the Doire. On one of the faces were fitted, at the different heights, the orifices or tubes which were thought proper; arrangements were made to receive them, and on the ground, which is at the base, were several measuring basins. These experiments were repeated in 1784 by Michelotti the younger, and they are the last introduced into the Table.

The experiments just reported and those made by other authors have shown that the coefficient of contraction is generally greater for small orifices and small heads; but they furnished only vague and almost contradictory notions in this respect. It would have been impossible to deduce from them the series of coefficients from great orifices to the smallest, and from great heads to the smallest; this deficiency has recently been supplied by MM. Poncelet and Lesbros. They made, in 1826 and 1827, at Metz, a series of experiments on a *very* great scale, and with care and means which had not before been employed.

They appear to have nearly solved the great and useful problem of the contraction of the vein in a thin partition, perhaps as nearly as the nature of the subject admits; and in a manner, if not entirely theoretical, at least very suitable to applications.

In these experiments the orifices were rectangular, and all of $0^m \cdot 2 = 7 \cdot 874$ in. base; the heights were successively 7·874 in., 3·937 in., 1·968 in., 1·18 in., 0·787 in., 0·394 in.; the heads varied from 0·394 in. to 5·577 ft. For each of these orifices the discharge was measured with several repetitions, under seven or ten heads, of which the two extremes were taken, the one nearly as small and the other as large as the apparatus allowed; and the corresponding coefficients were calculated.

Taking, then, the heads for abscissas and their coefficients for ordinates, the curve relating to that orifice was traced; and by its aid they determined the ordinates or coefficients intermediate to those directly given by experiment. In this manner the authors were enabled to arrange a large table of coefficients for each orifice, from which we extract the following;—

Head on centre of Orifice.	Height of Orifices (base of each 7·874 inches).					
	7·874 in.	3·937 in.	1·968 in.	1·181 in.	·787 in.	·394 in.
inches.						
·394						0·709
·787					0·660	0·698
1·181				0·638	0·660	0·691
1·575			0·612	0·640	0·859	0·685
1·968			0·617	0·640	0·659	0·682
2·362		0·590	0·622	0·640	0·658	0·678
3·150		0·600	0·626	0·639	0·657	0·671
3·937		0·605	0·628	0·638	0·655	0·667
4·725	0·572	0·609	0·630	0·637	0·654	0·664
5·906	0·585	0·611	0·631	0·635	0·653	0·660
7·874	0·592	0·613	0·634	0·634	0·650	0·655
11·811	0·598	0·616	0·632	0·632	0·645	0·650
15·748	0·600	0·617	0·631	0·631	0·642	0·647
feet.						
1·640	0·602	0·617	0·631	0·630	0·640	0·643
2·297	0·604	0·616	0·629	0·629	0·637	0·638
3·281	0·605	0·615	0·627	0·627	0·632	0·627
4·265	0·604	0·613	0·623	0·623	0·625	0·621
5·250	0·602	0·611	0·619	0·619	0·618	0·616
6·582	0·601	0·607	0·613	0·613	0·615	0·613
9·843	0·601	0·603	0·606	0·607	0·608	0·609

All the numbers in this Table are the respective values of m in the formula $Q = m S \sqrt{2 g H}$. But those which in each column are found above the transverse line, are not the true coefficients of reduction from the theoretic to the actual discharge, as we shall presently see.

Glancing over the numbers of each column, we see that they increase as the head increases, but only up to a certain point, beyond which they diminish, although the head still augments. However, in small orifices, those below 1·181 in., the increasing part of the series is very limited; and even in very small ones it is nothing. We see also that the terms of the decreasing part of all the series approach equality in proportion as the head increases in value.

Although the coefficients in the Table above are deduced from experiments made on rectangular orifices, they may serve for all others, whatever be their form; the height of the rectangle noted in the Table will express the smallest dimension of the orifice which should be used. For it is generally admitted that the discharge is entirely independent of the figure of the orifice, and that it always remains the same, while the area of the opening is unchanged; always provided, in accordance with an observation made by M. Hachette, that this figure presents no re-entrant angles.

Although some of the orifices on which Poncelet and Lesbros made their experiments are very large, still there are those which discharge twenty or thirty times as much water; such are the openings of sluice-gates in canals of navigation, and it was important to establish directly the coefficient of their discharge. In 1782 Lespinasse, a skilful engineer, made for this purpose several experiments on the canal of Languedoc, to which, ten years after, Pin, engineer of the same canal, added some others. The principal results of these, like the former, are placed in the following Table. The breadth of the opening is nearly 4·265 ft.; the form not being exactly a rectangle, the heights are to be regarded as only approximate.

Openings.		Head on the centre.	Discharge in one second.	Coefficient.
Area.	Height.			
square feet.	feet.	feet.	cubic feet.	
7·745	1·805	14·554	145·292	·613
6·992	1·640	6·631	92·635	·641
6·992	1·640	6·247	88·221	·629
6·466	1·509	12·878	138·937	·641
6·723	1·575	13·586	128·764	·647
6·723	1·575	6·394	83·948	·616
6·723	1·575	6·217	79·857	·594
6·717	1·575	6·480	85·219	·621
		Mean term		·625

This mean coefficient, exactly equal to that obtained from an experiment made on a sluice of the basin of Havre, is a little greater than that indicated by the table of M. Poncelet, p. 1893; probably the cause of it is, that on all the perimeter of the opening, the flowing did not occur as in a thin side, and that on some point the contraction was suppressed. It may be remarked on this subject that the woodwork which surrounded this orifice was $0^m \cdot 27 = \cdot 886$ ft. thick, and even $0^m \cdot 54 = 1 \cdot 772$ ft. thick on the lower edge. Also, when the gate was raised only a small quantity, the contraction ceased on the four sides, and the coefficient increased considerably. For example, Lespinasse having raised the gate only $0^m \cdot 12 = \cdot 394$ ft., had for a coefficient $\cdot 803$, while with $1 \cdot 509$ ft. opening, he had a coefficient of only $\cdot 641$.

The experiments of this engineer presented a very remarkable fact, of which no mention was made, and which reappeared in those of Pin. A sluice-gate had two parts, and each had an opening in it: if, while the water was flowing through one, the second was opened, the discharge of the first was diminished; if both were opened together, the discharge was not double of the two taken separately, although each had the same area and head. The difference is about one-eighth, as may be seen by the annexed comparison of the coefficients of reduction for the two cases.

Coefficient	
With one opening.	With two openings.
0·641	0·550
0·689	0·555
0·616	0·554
0·594	0·526
0·621	0·555
0·620	0·548

The interval between the two openings is $2^m \cdot 92 = 9 \cdot 58$ ft., and their plane forms an angle of 60° with the direction of the canal.

But it is very worthy of remark that this fact, which appeared positive for the sluices of the canals, did not take place at all in a series of experiments which M. Castel and D'Aubuisson de Voisins made on a small scale, but with very great care, for the purpose of verifying it. They had, side by side, three rectangular orifices of $\cdot 328$ ft. by $\cdot 033$ height, and separated by an interval of only $\cdot 033$ ft. They measured the water passing the middle orifice first, keeping the two side orifices closed, then opening one and finally opening both; the mean results are given in the following Table;—

Head on the Orifice.	Discharge from Middle Orifice.			Coefficient.
	Middle Orifice alone open.	Middle Orifice, with 1 Lateral Orifice, open.	Middle Orifice, with the 2 Lateral Orifices, open.	
feet.	cubic feet.	cubic feet.	cubic feet.	
·0656	·01607	·01606	·01614	0·728
·0984	·01946	·01946	·01942	0·720
·1312	·02242	·02246	·02250	0·719
·1640	·02497	·02497	..	0·715
·1969	·02723	·02716	..	0·710

Supposing that these unexpected coefficients might have been influenced by the very small interval from one orifice to the other, we increased the interval fivefold; that is, from $\cdot 394$ in. to $1 \cdot 968$ in., and the coefficients remained the same.

Surprised at the difference between these results and those found on the canal of Languedoc, and fearing that it arose from the particular form of the orifices and apparatus, D'Aubuisson requested M. Castel to make new experiments; and in 1836 he had the kindness to perform a series, by the aid of the great apparatus which he had just been using for his great work on Weirs. He dammed up a canal $0^m \cdot 74 = 2 \cdot 428$ ft. broad, with a thin copper plate, in which he opened, on the same horizontal strip, three rectangular orifices, each $3 \cdot 94$ in. wide by $2 \cdot 36$ in. high, and separated from each other by an interval of $3 \cdot 15$ in. The flowing took place under a constant head of $4 \cdot 213$ in. above their centre, and the coefficients of contraction were as follows;—

One orifice open	for the middle	·6198
	„ right	·6193
	„ left	·6194
Two orifices open	the two outsides	·6205
	middle and right	·6205
	„ „ left	·6207
The three orifices all open		·6230

Here, in proportion as the orifices were open, instead of a diminution in the coefficients, there was an increase, very small, to be sure. As it depended on a particular cause, a greater velocity of water in the canal, in consequence of a greater discharge, we shall make deduction of that, and conclude that, when in the dam of a reservoir or course of water new orifices are opened by the side of an orifice already existing, the discharge through that orifice is not diminished by it. Some persons thought that such a consequence would not extend to the case when two orifices were situated in planes making a certain angle, as in the openings of the sluice-gates. M. Castel solved this question. He took two plates joined at an angle of 120° (that of sluice-gates is generally from 10° to 20° more open); in each he made two rectangular orifices of $3 \cdot 94$ in. wide by $2 \cdot 36$ in. high; one $4 \cdot 72$ in. and the other $11 \cdot 02$ in. distant from the angle that joined them; he fitted this partition to the extremity of his canal, and let the water flow under a head of $0^m \cdot 14 = 5 \cdot 51$ in. He first opened successively each of the four orifices; then two at a time differently

combined; then three differently combined, and finally four. The following Table presents the mean results obtained.

No. Orifices.	Coefficient.
1	·618
2	·619
3	·620
4	·622

That given in the second line was obtained by the two extreme orifices, which were disposed like those of the sluice of the canal of Languedoc. As a last objection, it was said that the heads at the sluice of the canal of Languedoc were from $2^m = 6\frac{1}{2}$ ft. to $4^m = 13$ ft. To obtain an analogous case, M. Castel adapted to the experimental apparatus two orifices of 1·97 in. wide by 1·18 in. high, and had the results which we give, p. 1902.

It is always the same coefficient, with the insignificant increase due to the number of orifices open.

Head.	No. Orifice.	Coefficient.
3·379 ft.	1	·621
	2	·622
6·693 ft.	1	·619
	2	·621

These experiments, often repeated, with apparatus free from every exceptionable circumstance, and where any sensible error was impossible, by the most accurate and conscientious observer, induced D'Aubuisson de Voisins, if not to call in doubt the facts previously announced, at least to regard them as anomalous, and to reject the general consequence which may be drawn from them.

In the different cases hitherto investigated, it is admitted that the fluid of the reservoir arrives equally at all parts of the orifice, but often it is not so; for example, when the orifice is at the bottom of a vertical side, and its lower edge is in the plane of the bottom of the reservoir, the contraction is then destroyed on that side, and consequently the discharge is greater. What will be the increase in discharge for a certain length of suppression in the contraction? This question has been nearly solved by M. Bidone, by the aid of numerous experiments made for that purpose at the water-works of Turin.

The orifices were made in thin vertical copper plates; on their interior surface were fixed, perpendicular to their plane, small plates, on a level with certain sides of the orifice; as it were, the prolonging of these sides into the interior of the reservoir. During the flowing, the water running along the plates passed through the adjacent sides without any contraction, while a contraction occurred on the other sides. The form and size of these orifices were various. We shall limit ourselves to giving the results of experiments with a rectangular orifice of $0^m \cdot 054 = 2\frac{1}{10}$ in. base and 1·06 in. in height; the plates adapted to them, sometimes on one side and sometimes on two or three, were 2·638 in. long; they thus extended that length into the reservoir. The flowing having been produced under heads varying from 6·562 ft. to 22·573 ft., we have the following coefficients;—

The contraction being suppressed on	Part of Orifice without contraction.	Coefficient.	Ratio.
Neither side	0	·608	1·000
A small „	$\frac{1}{6}$	·620	1·020
A great „	$\frac{2}{6}$	·637	1·049
A great and a small	$\frac{3}{6}$	·659	1·085
Two small and one great ..	$\frac{4}{6}$	·680	1·112
Two great and one small ..	$\frac{5}{6}$	·692	1·139

M. Bidone, taking the mean result of all the experiments made on rectangular orifices, admits for the numbers of the last column, which indicates the increase of the coefficient and consequently of the discharge, that for the orifice entirely free being taken for unity, the general expression $1 + 0 \cdot 152 \frac{n}{p}$, in which n represents the length of the part of the perimeter when the contraction is suppressed, and p the length of the whole perimeter. The greatest error which this formula gave M. Bidone being only $\frac{1}{30}$, we may adopt for the value of the discharge in rectangular orifices when there is no contraction on a part of the perimeter, $m S \sqrt{2gH} \left(1 + 0 \cdot 152 \frac{n}{p}\right)$

The same author also made experiments on circular orifices. He took one of 1·575 in. diameter, and by the aid of curved cylindrical plates he destroyed the contraction, first, on an eighth of the circumference; then successively on 2, 3, 4, 5, 6, and 7 eighths. We indicate the results obtained in the following Table;—

$\frac{n}{p}$	Coefficient.	Ratio.	$\frac{n}{p}$	Coefficient.	Ratio.
0	0·597	1·000	$\frac{4}{8}$	0·639	1·072
$\frac{1}{8}$	0·603	1·011	$\frac{5}{8}$	0·649	1·087
$\frac{2}{8}$	0·615	1·032	$\frac{6}{8}$	0·664	1·112
$\frac{3}{8}$	0·625	1·048	$\frac{7}{8}$	0·670	1·123

We see here that the numbers of the last column increase a little less rapidly than in the case of the rectangular orifices, so that the general expression from these numbers would be only $1 + 0 \cdot 128 \frac{n}{p}$.

M. Bidone, after having circumscribed seven-eighths of his circular orifice, wished to circumscribe it entirely; and for this purpose he fitted to the orifice a cylindrical tube of $0^m \cdot 04 = 1 \cdot 575$ in. diameter, which ran $0^m \cdot 067 = 2 \cdot 638$ in. into the interior of the reservoir; he had $0 \cdot 767$ for the coefficient, and consequently $1 \cdot 285$ for the number of the last column. The expression above would have given $1 \cdot 128$—a number in which the increase is not even half of that really obtained. Whence we conclude that the phenomena of flowing through interior tubes, the case where the contraction is entirely suppressed at the edges of the exterior orifice, is no longer of the same kind as that where it is destroyed only in part, however great that part may be; there is no passing from one case to the other.

We have always supposed the sides in which the orifices were, to be plane, but they may be of another form. To give an idea of the effect which may result upon the product of the flowing, it is necessary to remember that if the fluid lines arrive at the orifice parallel to each other, the actual discharge would be equal to the theoretic discharge, and that it is less only in consequence of the obliquity with which they unite, from which obliquity necessarily results, at the point of contact, the destruction of a part of the motion acquired. This being established, if around the orifice we imagine a spherical surface or cap, Fig. 4005, of a radius equal to that of the sphere of activity of the orifice, and limited by the sides of the vessel, it would be traversed at each of its points, and in a direction nearly perpendicular, by the arriving lines; the more extended the spherical cap, the more oblique will be their directions, and the more opposed to each other; and consequently the more will their motion be destroyed at the orifice, and the less considerable the discharge. When the side is plane, the cap is the surface of a hemisphere, Fig. 1001, and is found in the case to which belong the coefficients of discharge just given. But if it is disposed in the form of a funnel, or if it is simply concave towards the interior of the vessel, then the cap is smaller and the discharge greater, without, however, exactly following the ratio of the spherical surface. If, on the contrary, the side is convex, the product is less; it will be smaller still in the case represented, Fig. 4005. Finally, it would be a *minimum* if the cap became an entire sphere; and this would happen if it were possible to transport an orifice to the middle of the fluid mass enclosed in the vessel.

4005.

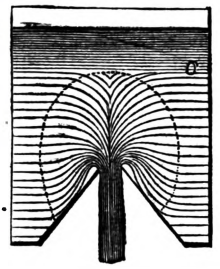

4006.

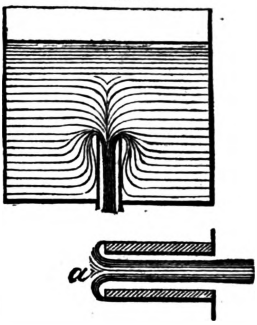

That profound mathematician Borda succeeded in almost entirely realizing this case. He introduced into a vessel a tin tube $0^m \cdot 135 = 4 \cdot 43$ ft. long and $0^m \cdot 032 = \cdot 105$ ft. diameter; and under a head of $0 \cdot 820$ ft. he caused the flowing to take place in such a manner that the effluent water in no way touched the sides of the tubes, Fig. 4006; the actual discharge was only $0 \cdot 515$ of the theoretical discharge, and several considerations led Borda to admit that it might have been reduced to $\cdot 50$.

Having afterwards surrounded the orifice of entrance of the tube with a large border, thus putting it, although in the middle of the fluid, into the same circumstances as when it is perforated through a thin side of a vessel, the coefficient was raised to $0 \cdot 625$. He might have obtained the same result by employing simply a tube with very thick sides.

If the sides of the tube had a sensible thickness, without being too considerable, $0 \cdot 394$ in. or even $0 \cdot 788$ in. for example, and were also cut quite square off at the extremity, so that the zone formed by the thickness should be plane, with sharp edges, the fluid winding round the exterior edge would enter the tube without touching the rest of the zone, Fig. 4006, a; so that every part of the side inside of the exterior surface would be without effect, and the flowing would take place as if that surface alone existed. This therefore will be its diameter; that is to say, the exterior diameter of the tube, which must be introduced into calculations relating to interior tubes. By taking this, Bidone found, by two experiments, that the action of the vein running in the tubes without touching the interior, was very nearly half the section of the tube, and that the coefficient of contraction was nearly $0 \cdot 50$.

Thus $0 \cdot 50$ and 1 will be the limits of the coefficients of contraction; limits which may be approached very nearly, but never quite attained. For orifices in a plane side, they seldom descend below $\cdot 60$ or rise above $\cdot 70$; and even in ordinary practice, they are confined between $\cdot 60$ and $\cdot 64$; as a mean approximate term, $\cdot 62$ is usually taken, and we have,

$$\text{In mètres, } Q = 0 \cdot 62\, S \sqrt{2gH} = 2 \cdot 75\, S \sqrt{H} = 216\, d^2 \sqrt{H}; \text{ or,}$$
$$\text{In feet, } \quad Q = 0 \cdot 62\, S \sqrt{2gH} = 4 \cdot 974\, S \sqrt{H} = 3 \cdot 9066\, d^2 \sqrt{H},$$

d being the diameter of a circular orifice.

In the velocity with which water flows from orifices in a thin side, as we have admitted exactly that due to the head of the reservoir, is it $\sqrt{2gH}$? We will examine it.

We may ascertain the velocity with which water runs from an orifice, by the height to which a vertical jet, starting from that orifice, is thrown; it is at least $\sqrt{2gh}$, h being that height. Now, from what is known respecting *spouting fluids*, h differs from H only 1, 2, 3, &c., hundredths of the square of its value, according as H is 1^m, 2^m, 3^m, &c.; and the velocities being as the square roots of the heights, the *actual* velocities will differ in the same cases only 1, 2, 3, &c., half-hundredths of the *theoretic velocity*. Another mode of determining the actual velocity indicates still less difference. We will present it before making an application of it.

When a body is thrown in any direction A Y, Fig. 4007, with a certain velocity, by the combined influence of that velocity and of gravity, it describes a curve A M B.

4007.

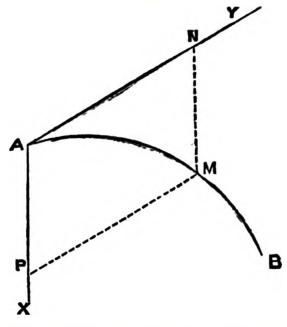

We have already referred to the theoretical difficulties connected with this curve A M B; hence it is unnecessary to dwell upon this matter here. In the present article we confine ourselves to what concerns the fundamental principle which we employ; and treat of that *parabola* which coincides most nearly with the curve A M B, Fig. 4007. See DAMMING, p. 1126, and GUNNERY.

Let v be the velocity with which a body is impelled along A Y, and t the time spent in arriving at N, in this direction, if the force of projection acted alone upon it; the motion would then have been uniform, and we should have had $A N = v t$; on the other hand, had the body been subjected to the action of gravity alone, it would have descended from A to P during the same time, so that we should have had $A P = \frac{g t^2}{2}$. Draw the parallelogram A P M N; at the end of the same time it really will arrive at M, and will have described the arc A M; A P will be its *abscissa*, and M P, parallel to the axis A Y, wil be its *ordinate*. Call the first of these lines x and the second y, we shall have $x = \frac{g t^2}{2}$ and $y = v t$; in this latter equation, taking the value of t, and substituting it in the first, we have $x = \frac{g y^2}{2 v^2}$, or $y^2 = \frac{2 v^2 x}{g}$; or, calling h the height due to the velocity v, and recollecting that $\frac{v^2}{2 g} = h$, $y^2 = 4 h x$; an equation of a parabola of which $4 h$ is the parameter. Hence *a heavy body, impelled by any force of projection, describes a curve which resembles a parabola whose parameter, in the case of a jet of water, may be taken without involving much error, equal to four times the height due to the velocity of projection.*

What we have just said of a body in general is applicable also to every jet of water issuing from an orifice. If this orifice is in a vertical side, the axis of projection being horizontal, the ordinates will be horizontal; they will be the distances of the different points of the jet from the vertical, let down from the centre of the orifice; and if through any point c of that vertical, we imagine a horizontal plane, the distance C D, Fig. 4008, is called the *reach of the jet* on that plane. According to our theorem, the square of this range, or in general of a distance M P, divided by four times its corresponding perpendicular A P, will give the height due to the velocity of exit $\left(h = \frac{y^2}{4 x}\right)$; and consequently we shall have for this velocity, $v = \sqrt{2 g h} = 2{\cdot}215 \frac{y}{\sqrt{x}}$ in mètres, or $4{\cdot}0113 \frac{y}{\sqrt{x}}$ in feet.

4008.

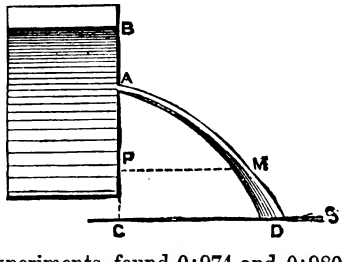

By following this mode of determination, Bossut, in two experiments, found 0·974 and 0·980 for the ratio of the actual to the theoretic velocity. Michelotti having caused jets to issue from each of the three stories of the tower of his hydraulic establishment through a vertical orifice 0·889 ft. diameter, obtained the results given in the following Table;—

Head.	Jet.		Velocity.		Ratio.
	Abscissa.	Range.	Real.	Theoretic.	
feet.	feet.	feet.	feet.	feet.	
7·513	20·615	24·706	21·819	21·983	·993
12·894	15·289	27·724	28·446	28·807	·988
23·590	4·626	20·506	38·289	38·978	·983

The difference between the two velocities increases with the head. It should be so, since the cause of this difference, the resistance of the air, increases as the square of the velocity, and consequently nearly as the head.

If the water contained in the reservoir, instead of being at rest, were animated with a velocity which carried it towards the orifice; for example, if the basin having a small section were fed by a course of water which came directly to the side on which the orifice is open, the fluid particles would go out, not only in virtue of the pressure exerted by the fluid mass above, but also in virtue of the velocity which they had at the moment of entering the sphere of activity of the orifice; we should thus have to add to the head measuring the pressure, a new force, which will be the head generating that velocity. Thus, if u represent that velocity, we shall have

$$Q = m S \sqrt{2 g \left(h + \frac{u^2}{2 g}\right)} = m S \sqrt{2 g h + u^2}.$$

Example.—There is a basin 65·62 ft. long, 6·562 ft. broad, and 3·281 ft. depth of water; at one extremity is a dam of plank, with a rectangular opening 1·804 ft. wide by 1·181 ft. high; its

sill or lower edge is 2·986 ft. below the level at which the water is constantly kept in the basin; it is supplied by a stream arriving at the other extremity. What is the discharge?

We have $S = 1·804 \times 1·181 = 2·131$ sq. ft.; $h = 2·986 - \frac{1·181}{2} = 2·396$; m, according to the Table, p. 1893, supposed to be prolonged, will be about 0·600; as to u, it will be given by one of the means to be indicated hereafter. In a great number of cases we can regard it as being the mean velocity of the water in the basin, a velocity to be determined as follows: the discharge Q, taken at first by neglecting u will be $0·600 \times 2·131 \sqrt{64·364 \times 2·396} = 15·878$ cub. ft. When the water runs in a canal, we have $Q = S u$; dividing then the value of Q found, by the section (of the basin) 21·53, we find $u = ·73748$, the square of which is ·54389. Putting this value into the general expression of the discharge, we have $0·600 \times 2·131 \sqrt{64·364 \times 2·396 + ·5439} = 15·906$ cub. ft. Joseph Bennett, the American translator of D'Aubuisson's work on Hydraulics, observes, that here D'Aubuisson's book has an error in taking the section of the orifice, instead of the section of the basin, and also another error in solving the example. What is here given is supposed to be what D'Aubuisson intended.

The difference between these two results may be entirely neglected. The effect of the velocity u has been almost nothing; in most cases it will be so.

Very often the water at the exit of the orifices made in the side of a reservoir is taken and conducted by canals or channels, uncovered on the upper part, the bottom of which as well as the sides agree with the lower edge and sides of the orifice, which are thus in the planes of the bottom and sides respectively. MM. Poncelet and Lesbros determined, by a great number of experiments, the coefficients of the discharge for such canals, which they fitted to orifices on which they had already made the fine observations whose results we have recorded; the canals varied in form, inclination, and position. The last of these philosophers communicated to D'Aubuisson a part of the results given by a rectangular canal $3^m = 9·843$ ft. long and $0^m·20 = ·656$ ft. broad, like all its orifices. The reservoir in whose side the orifices were, was $3^m·68 = 12·074$ ft. broad. The canal was first placed at an equal distance from the two sides of the reservoir and $0^m·54 = 1·772$ ft. above the bottom; it was kept horizontal; it is canal No. 1 of the following Table. We here give the coefficients m of the formula $m S \sqrt{2 g H}$, which MM. Poncelet and Lesbros obtained, and place them opposite those which they had obtained previously with the same orifices, when the water flowed freely into the atmosphere.

Height of Orifice.	Head on Orifice.	Coefficient.			Height of Orifice.	Head on Orifice.	Coefficient.		
		Without Canal.	With Canal				Without Canal.	With Canal	
			No. 1.	No. 2.				No. 1.	No. 2.
feet.	feet.				feet.	feet.			
·6562	4·2850	0·604	0·601	0·601		·1542	0·617	0·495	0·493
	3·1235	0·605	0·602	0·599		·1181	0·612	0·452	0·443
	1·3124	0·600	0·591	0·580	·0984	4·4261	0·622	0·622	
	·7940	0·596	0·559	0·552		1·5289	0·630	0·629	
	·4003	0·572	0·483	0·482		·6792	0·634	0·632	
·3281	4·4490	0·643	0·614			·2658	0·639	0·633	
	3·3040	0·615	0·614			·2067	0·640	0·627	
	1·5814	0·617	0·615			·1870	0·640	0·610	
	·5282	0·611	0·590			·1214	0·639	0·511	
	·3740	0·608	0·562		·0328	·4449	0·620	0·621	0·660
	·2887	0·602	0·523			3·2580	0·627	0·631	0·665
	·1969	0·590	0·459			1·6307	0·643	0·648	0·671
·1640	4·7935	0·621	0·624	0·627		·6398	0·655	0·665	
	3·5468	0·627	0·626	0·628		·4167	0·664	0·669	
	1·6350	0·631	0·625	0·624		·2494	0·671	0·671	0·680
	·6956	0·634	0·631	0·615		·1378	0·684	0·640	
	·3478	0·629	0·614	0·597					

By comparing the coefficients of the third and fourth columns, allowing for the inevitable errors in observation, and excepting the orifice of 0·328 ft., we see that so long as the heads taken above the centre of the orifice were from 2 to 2½ times greater than the height of that orifice, the canal had no marked difference in the discharge; the discharge was the same as if no canal were there. But in small heads, the discharge diminished perceptibly, and as much more so as the head was less; the diminution has reached a quarter, and even more.

This difference in great and small heads appears to proceed from the fact that, with the former, the fluid, rushing forth as into the air, is not influenced by the resistance of the sides. The canal, says Lesbros, has no influence, except when the head is not great enough to detach the fluid jet at its exit from the orifice entirely from the bottom (and sides) of this canal.

The same canal was then placed, as is often done in practice, in such a manner that its floor was at the level of the bottom of the reservoir, and was, in fact, a prolonging of it. It was natural to suppose that the contraction being then suppressed on the lower edge of the orifice, the coefficient of discharge would be greater; but generally, and the orifice of ·0328 ft. still excepted, it was less, particularly with small heads, as was seen in the above Table, where the canal, in its

new position, is designated by No. 2. Other circumstances, perhaps the resistance of the bottom of the reservoir, which may have diminished the velocity of arrival, perhaps the less facility which the fluid sheet had in raising itself above the sill at the entrance of the canal, will have more than compensated for the diminution in the contraction.

In withdrawing the canal from the middle of the reservoir, and placing it nearer one of the sides, this diminution took place in part, and a small increase in the discharge was obtained. The canal was then inclined, leaving it in other respects in the position it last had. When the inclination was $\frac{1}{100}$ or 34′, the coefficients were sensibly the same as when the canal was horizontal. But when the inclination was carried to $\frac{1}{10}$, or 5° 44′, the coefficients were increased from 3 to 4 per cent., as seen in the following Table;—

Height of Orifice.	Head on Orifice.	Coefficients, with the Canal	
		Horizontal.	Inclined.
feet.	feet.		
·0443	1·1188	·660	·691
·0666	1·1123	·654	·681
·1555	·6890	·616	·639
·1775	·6660	·612	·636

Cylindrical Ajutages.—Cylindrical ajutages, called also *additional tubes*, as we have seen, give a more considerable discharge than orifices in a thin side, the head and area of the opening remaining the same. But in order to produce this effect, it is necessary that the water entirely fill the mouth of the passage; it is commonly so, when the length of the tube is two or three times its diameter. If it is less, it often happens that the fluid vein, which is contracted at the entrance of the tube, does not again increase and fill the interior; the flowing then takes place in all respects as through a thin side; this is always the case when the length of the tube is less than that of the contracted vein, and consequently is only half, or less than half the diameter.

The coefficient of reduction from the theoretic to the actual discharge, through an additional tube, presents a few variations, as may be seen in the following Table;—

Observer.	Tube.		Head.	Coefficient.
	Diameter.	Length.		
	feet.	feet.	feet.	
Castel	·0509	·1312	·6562	·827
„	·0509	·1312	1·5749	·829
„	·0509	·1312	3·2478	·829
„	·0509	·1312	6·5620	·829
„	·0509	·1312	9·9414	·830
Bossut	·0755	·1772	2·1326	·788
„	·0755	·1772	4·0684	·787
Eytelwein	·0853	·2559	2·3623	·821
Bossut	·0886	·0341	12·6318	·804
„	·0886	·1772	12·6975	·804
„	·0886	·3543	12·8615	·804
Venturi	·1345	·4200	2·8873	·822
Michelotti	·2658	·7087	7·1526	·815
	square.			
„	·2658	·7087	12·4678	·803
„	·2658	·7087	22·0155	·803

The mean of the coefficients, abstracting the first two of Bossut, manifestly anomalous, is 0·817; ·82 is generally taken, and we have

$$Q = \cdot 82\, S \sqrt{64 \cdot 364\, H} = 6 \cdot 5786\, S \sqrt{H} = 5 \cdot 1668\, d^2 \sqrt{H}.$$

Since the jet in a full tube runs out in lines parallel to the axis of the orifice, and consequently its section is equal to that of the orifice, the diminution of the discharge can arise only from a diminution in the velocity; and the ratio of the actual to the theoretic discharge will also be that of the actual to the theoretic velocity, as is seen by the following results of three experiments cited in the above Table; one of Venturi and two of M. Castel;—

Jet.		Velocity.		Coefficient	
Abscissa.	Ordinate.	Real.	Theoretic.	Of Velocity.	Of Discharge.
feet.	feet.	feet.	feet.		
4·796	6·128	11·204	13·628	·824	·822
1·791	2·208	6·6175	7·959	·832	·827
3·7402	5·803	12·037	14·481	·832	·829

Thus we may admit that the velocity of a jet, at its passage from a cylindrical tube, is only 0·82 of that due to the height of the reservoir; and the height due to the velocity of the jet will be only ·67 (= ·82²) of that due to the height of the reservoir, since the heights or heads are supposed to be as the squares of the velocities.

In the hypothesis of the parallelism of the sections, the principle of the *vis viva*: that the quality of action developed by the motive force, during a certain time, is equal to half the increase or diminution of the *vis viva* during that time—this principle gives for the velocity v of the water passing from a short prismatic tube, of which S is the section, and which is terminated by an orifice whose section s is smaller than the preceding, m and m' being the coefficient of contraction for these sections respectively

$$= \sqrt{\frac{2gH}{1+\left(\frac{m's}{S}\right)^2\left(\frac{1}{m}-1\right)^2}};$$

and for the case of our additional tubes entirely open at their extremity, and consequently where $s = S$ and $m' = 1$,

$$v = \sqrt{\frac{2gH}{1+\left(\frac{1}{m}-1\right)^2}}.$$

If it be admitted that the contraction at the entrance of the tube is the same as in the orifices in a thin side, that is to say, if we make $m = ·62$, we have $v = 0·855\sqrt{2gH}$ and $Q = ·855\ S\sqrt{2gH}$; with $m = ·65$, it would be $Q = ·0885\ S\sqrt{2gH}$.

The fluid vein, after its contraction at the entrance of the additional tube, tends to take and preserve a cylindrical form, whose section would be that of the contracted vein; and consequently it tends to pass out without touching the sides of the tube; but some lines of water are carried towards the sides, either by a divergent direction, by an attractive action, or by the two causes united. As soon as they arrive in contact, they are strongly retained by the molecular attraction, that which produces the ascension of water in capillary tubes; by an effect of this same force they draw the neighbouring lines, and by degrees the whole vein, which then rushes out, filling the tube, and passes through the contracted section more rapidly. Such appears to be the physical cause of the increase of discharge due to tubes.

The immediate cause is the contact; and all the circumstances which cause the contact, or which favour it, will produce that increase.

Among these circumstances we will notice;—

1st. The length of the tube; the longer it is, the more chances it will present for contact; there will be no contact when the length is less than that of the contracted vein.

2nd. A small velocity; the fluid lines will then be less forcibly retained in the direction of the primitive motion; they will deviate and approach the sides with more facility. M. Hachette, in his experiments made on this subject, succeeded, by augmenting the head and consequently the velocity, in detaching a vein from the side it was following. On the contrary, by diminishing the head, allowing it, however, a head of 0·9843 ft., he succeeded in making the tube more full, the length of which was 0·01968 ft., and its diameter 0·03117 ft.

3rd. The affinity of the material of the tube, or rather its disposition to be more readily moistened. Thus, by rubbing tallow or wax on the sides, the water will not follow them as it did before. Hachette, by covering an iron tube with an amalgam of tin, caused mercury to run out with a full tube, which did not take place before the coating. The interposition of air, or its arrival in a tube, is sufficient to detach the fluid vein from it. Venturi, after having fitted to a vessel full of water, a tube of $0^m·0406 = ·1332$ ft. diameter and $0^m·095 = ·3117$ ft. length, perforated near the middle and quite round its perimeter, with a dozen small holes; when the flowing took place, not a drop of water passed through these holes, nor did the water touch the sides. The holes were then successively stopped, and the same results continued; but when all were closed, the vein filled the tube, and the discharge was increased in the ratio of 31 to 41. M. Hachette, on repeating the experiments and closing the holes with caution, saw the vein continue to pass out without touching the side, but a slight agitation was then enough to produce contact, and to produce a flow with the full tube.

It is more than a century since Poleni made known the singular effects of cylindrical tubes, and the investigation of the cause has been a serious study with philosophers.

It was generally said, since the convergence in the direction of the fluid lines, on their arrival at the orifice, produces a contraction in the fluid vein, there will also be a contraction at the entrance of the tube; but in consequence of the attractive action of the sides, the contraction will be less, and the discharge will consequently be greater. The experiments of Venturi do not allow us to admit of such a cause producing a less contraction.

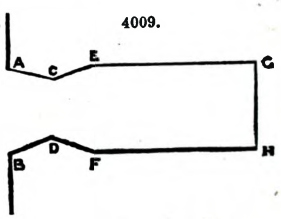

That ingenious philosopher opened, in a thin side of a reservoir, an orifice, whose diameter A B, Fig. 4009, was $0^m·0406 = ·1332$ ft.; and under a head of $0^m·88 = 2·8873$ ft., he obtained $0^{mmm}·137 = 4·8384$ cub. ft. of water in 41″. To this orifice he then fitted the tube A B C D, having nearly the form of the contracted vein (he had C D = $0^m·0327 = ·1073$ ft., and A C = $0^m·025 = ·082$ ft.); under the same head he obtained the same volume of water in 42″. To the first tube he fitted the tube C D H G C,

in which G H = E F = A B, and the duration of the flowing, all else being equal, was only 31″. Lastly, Fig. 4010, for all this apparatus he substituted the simple cylindrical tube A B H G of the same length, and also of the diameter ·1332 ft., and the flowing of 4·8384 cub. ft. again took place in 31″.

4010.

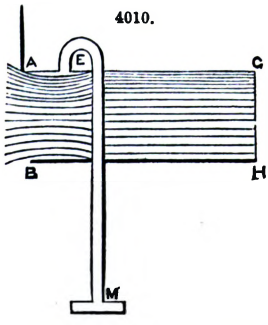

Thus, in this simple tube, in which everything went on as in the compound tube, there was or there may have been an equal contraction; and the contraction which necessarily took place in the latter at C D is very nearly equal to that of orifices in a thin side. The effect of the cylindrical tube, therefore, was not to lessen the contraction, but to pass the fluid through the contracted section C D, with a velocity increased in the ratio of 31 to 41. Hence alone the increase of discharge.

Venturi attributed it to an excess in the pressure of the atmosphere on the fluid surface contained in the reservoir, an excess proceeding from a vacuum tending to arise in the part of the tube where the greatest contraction took place. He sought to prove this opinion by several examples, very interesting on other accounts, but he has sometimes generalized the results too much. For example, because in one of them the water ceased to flow with full tube under the receiver of an air-pump, he concluded that the phenomena of additional tubes did not take place in the vacuum, and yet Hachette is certain of having produced them there. This single fact would overthrow an hypothesis, against which other peremptory objections are also raised.

Among the experiments of Venturi is one which presents, in a distinct manner, a very remarkable fact, which Bernoulli had already made known. To a cylindrical tube $0^m \cdot 0406 = \cdot 1332$ ft. diameter and $0^m \cdot 122 = \cdot 4003$ ft. long; at E $0^m \cdot 018 = \cdot 0591$ ft. from its origin, he fitted a curved tube of glass, the other extremity of which was plunged into a vessel M, containing coloured water; the flowing was caused by a head of $0^m \cdot 88 = 2 \cdot 8873$ ft.; and the water was raised in the tube $0^m \cdot 65 = 2 \cdot 1326$ ft.

In the hypothesis of Venturi, this elevation, joined to the head, would be the height due to the velocity through the contracted section, as the head alone is the height due when there is no additional tube; if it were so, the ratio of the velocities must be as $\sqrt{2 \cdot 8873}$; $\sqrt{2 \cdot 8873 + 2 \cdot 1326}$, or as 31 to 40·9, and experiment has actually given a similar result (31 to 41). But from this fact, peculiar perhaps to the case taken for example, a general principle ought not to be deduced. Moreover, the true cause of the ascension of the coloured water in the tube was indicated more than a hundred years ago by Daniel Bernoulli. That celebrated geometrician, author of the chief part of the theoretical principles of the flowing of water, established the law, that the pressure which a fluid exerts against the sides of a tube in which it moves, is equal to the head minus the height due to the velocity of the motion. It is necessary to remark that in speaking of absolute pressure the weight of the atmosphere should be added to the *head* properly so called; thus, if K represents that weight, that is to say, a column of water equal in weight to that of the column of the barometer, H the head and v the velocity of the fluid at a determined point of the tube, $K + H - \cdot 01553\, v^2$ will be the interior pressure at that point. For the exterior pressure we have K, as on all the other points. In one example, at the place of greatest contraction, where $v = \frac{41}{31} \sqrt{2\,g\,H}$ and H = 2·887 ft., the interior pressure is $K + 2 \cdot 887 - 5 \cdot 050 = K - 2 \cdot 163$ in feet, it is less by 2·163 ft. than the exterior pressure; the exterior pressure will therefore prevail, and will cause the water to ascend 2·163 ft., and, in general, a quantity equal to its excess over the other.

By neglecting K, which is found both in the value of the interior and exterior pressures, the interior pressure on the same point compared to the other is $H - \cdot 01553\, v^2$; it will be negative whenever the height due to the velocity is greater than the head.

Venturi having placed the same tube $0^m \cdot 054 = \cdot 177$ ft. from the reservoir, the coloured water was not raised; the height due, $0^m \cdot 594$ or $0 \cdot 051\, v^2 - 0 \cdot 051\, (0 \cdot 82)^2\, g\, H$ in mètres, or $\cdot 01553\, v^2 - \cdot 01553\, (0 \cdot 82)^2\, g\, H$ in feet, was then smaller than the head 2·8873 ft.; the interior pressure was positive, and consequently there was no ascension. Bennett, the translator of D'Aubuisson, remarks;—Should the reader find difficulty as to the formation of this formula, it will vanish in remembering that the velocity from cylindrical pipes is but $\frac{82}{100}$ of that due to the height of reservoir (or $v = \cdot 82 \sqrt{2\,g\,H}$), and by substituting this value in the equation $H = \frac{v^2}{2\,g}$.

Conical Converging Tubes.—Conical tubes, properly so called—that is to say, those which slightly converge towards the exterior of the reservoir—increase the discharge still more than the preceding; they afford very regular jets, and throw them to a greater distance or height. They are also almost exclusively employed in practice. However, their effects as to the discharge and velocity of projection are much more varied; they change with the *angle of convergence*, that is, with the angle which the opposite sides of the truncated cone constituting the tube, form by their extension.

They are, however, the tubes on which we have the fewest documents. In reference to them, D'Aubuisson knew of only four experiments of Poleni, published at Florence in 1718, and which Bossut gives in his Hydrodynamique; notwithstanding the merit of their author, and although made on a great scale, D'Aubuisson had very strong reasons for doubting their accuracy. Struck by the gap which hydraulics presents in this important part, he projected a series of experiments suitable to fill it.

There are or there may be two contractions of the fluid vein, in running through conical tubes; one interior, or at the entrance of the tube, which diminishes the velocity produced by the head; the other exterior, or at the exit, by which the section of the vein a little below the exterior mouth of the orifice is smaller than the mouth itself. Consequently, if s is the section of the orifice, and

V the velocity due to the head, the real discharge will be $ns \times n'V = nn'SV$; n and n' being two coefficients to be found by experiment; n is the ratio of the fluid section to the section of the orifice, or the coefficient of the exterior contraction; n' is the ratio of the actual to the theoretic velocity, or the *coefficient of the velocity*; and nn' is the ratio of the actual to the theoretic discharge, or the *coefficient of discharge*.

The knowledge of the two latter, for the different cases which may present themselves, is sometimes useful in practice, as we shall see in treating of *jets of water*; it is this utility, or rather necessity, of having their value, that is, of knowing the discharge and force of projection of different tubes, which has induced the experimenter to make researches on this subject.

To determine properly the different coefficients in question, and above all, to fix the angle of convergence giving the greatest discharge, D'Aubuisson thought it necessary to subject many series of tubes to experiment; in each, the diameter of the orifice of exit and the length of the tube remaining constantly the same; but the diameter of the entrance, and consequently the angle of convergence, was gradually increased. The water flowed through each under different heads. At each experiment the actual discharge was determined by direct measurement, and the velocity of exit by the mode indicated above; the discharge, divided by S V, would give nn', and the velocity divided by v ($v = \sqrt{2gH}$), would give n'. The series of nn' would show the discharge corresponding to each angle of convergence, and consequently the angle of greatest discharge; and the series of n' would indicate the progression according to which the velocity increased.

The water-works of Toulouse offered all the desirable facilities for executing such a plan. M. Castel, the hydraulic engineer of that city, was pleased, on the invitation of the Academy of Sciences, to undertake the execution.

In 1831, with a very small apparatus, and under small heads, Castel had made a series of experiments, the details and results of which were published in the Annales des Mines of 1833. In 1837 he resumed and considerably extended his works.

This apparatus consisted principally of a rectangular cast-iron box $0^m \cdot 41 = 1 \cdot 345$ ft. long, $1 \cdot 345$ ft. wide, and $0^m \cdot 82 = 2 \cdot 69$ ft. high; it received at its lower part, and by means of a great tube, the water coming from a reservoir established more than $29 \cdot 529$ ft. above it and kept constantly full; on the front face of the box is a rectangular opening, $\cdot 459$ ft. high by $\cdot 328$ ft. wide; it was closed by a well-finished copper plate, to which were fitted additional tubes, in such a manner that their axes were horizontal. When the box was opened at top, the fluid surface could rise there to about $\cdot 689$ ft. above that axis. The upper opening is commonly surmounted with short tubes of $\cdot 656$ ft. diameter, the first of which is $\cdot 984$ ft. high, and the rest $1 \cdot 64$ ft. high, so that heads of about $\cdot 656$ ft., $1 \cdot 64$ ft., $3 \cdot 281$ ft., $4 \cdot 921$ ft., $6 \cdot 562$ ft., &c., above the tube subjected to experiment, could be obtained

By means of two cocks placed, one at the entrance of the water into the box, and the other on the upper part of the tubes which surmount it, a perfectly constant level was obtained.

The tubes which M. Castel used were of brass, as well turned and polished as possible. He had two series of them; in one, the diameter of the exit was $\cdot 05086$ ft. and the length about $\cdot 1312$ ft.; in the other, the diameter was $\cdot 06562$ ft. and the length $\cdot 164$ ft.

The two diameters of each were measured and re-measured with much care, but the want of an instrument proper to operate accurately with such measures, did not permit of a measurement nearer than $0^m \cdot 00005 = 0 \cdot 002$ in. ($\frac{2}{1000}$), and such an error might give an error of half a hundredth in the discharges and coefficients.

M. Castel rarely had them so large. He operated under heads of $\cdot 6562$ ft., $1 \cdot 64$ ft., $3 \cdot 281$ ft., $4 \cdot 921$ ft., $6 \cdot 562$ ft., and about $9 \cdot 843$ ft.; he measured them with very great exactness. He then gives, as very exact, the volumes of water obtained in a certain time.

To determine the velocities with which the water passed from the tubes, he erected, $3 \cdot 74$ ft. below their axis, a horizontal flooring, in the middle of which was a longitudinal groove $\cdot 328$ ft. broad, into which the jet passed; its range was measured by means of a graduated rule fixed on the flooring and quite near. This range was the ordinate of the curve described by the jet; $\cdot 374$ ft. was its abscissa, and from these two ordinates was deduced the velocity of projection. Finally, these velocities could only be taken for heads of $6 \cdot 562$ ft. and less; beyond that the jets were broken, and passed beyond the plane where they could be measured.

The same tube, under heads which varied from $0 \cdot 689$ ft. to $9 \cdot 941$ ft., gave discharges always proportional to $\sqrt{H}$, and consequently the coefficients were sensibly the same. Perhaps they experienced a very slight increase under the head of $9 \cdot 941$ ft. We here give those which were obtained with the pipe of each of the two series which furnished the greatest discharge.

Tube of ·05085 foot diameter			Tube of ·0656 foot diameter.		
Head in feet.	Coefficient		Head in feet.	Coefficient	
	Of Discharge.	Of Velocity.		Of Discharge.	Of Velocity.
·7054	·946	·963	·6923	·956	·966
1·5847	·946	·966	1·5847	·957	·968
3·2547	·946	·963	3·2646	·955	·965
4·8952	·947	·966	4·9149	·956	·962
6·5817	·946	·956	6·5782	·956	·959
9·9414	·947	..	9·9414	·957	..

As to the coefficients of the velocity, it seemed that they would have been sensibly constant, were it not for the resistance of the atmosphere. But this resistance diminishing the range of the

jet, and as much more so as the head was greater, there must be in the calculated coefficients a diminution varying with the head, although in reality there was none in the velocity with which the fluid passed out or tended to pass out. We will now compare together the coefficients, both those of the discharge and of the velocity, obtained with the different tubes of the same series; tubes which, in other respects, differed only in the angle of convergence; for each of them the mean term was taken between the six or five coefficients which were given under the six or five heads nearly equal to those which are noted in the preceding Table.

Ajutage ·05085 foot in diameter.			Ajutage ·0656 foot in diameter.		
Angle of Convergence.	Coefficient of		Angle of Convergence.	Coefficient of	
	Discharge.	Velocity.		Discharge.	Velocity.
° ′			° ′		
0 0	0·829	0·830			
1 36	0·866	0·866			
3 10	0·895	0·894	2 50	0·914	0·906
4 10	0·912	0·910			
5 26	0·924	0·920	5 26	0·930	0·928
7 52	0·929	0·931	6 54	0·938	0·938
8 58	0·934	0·942			
10 20	0·938	0·950	10 30	0·945	0·953
12 4	0·942	0·955	12 10	0·949	0·957
13 24	0·946	0·962	13 40	0·956	0·964
14 28	0·941	0·966	15 2	0·949	0·967
16 36	0·938	0·971			
19 28	0·924	0·970	18 10	0·939	0·970
21 0	0·918	0·971			
23 0	0·913	0·974	23 4	0·930	0·973
29 58	0·896	0·975	33 52	0·920	0·979
40 20	0·896	0·980			
48 50	0·847	0·984			

It follows, from the facts set down in these columns;—That for the same orifice of exit, and under the same head, starting from 0·83 of the theoretic discharge, the actual discharge gradually increases, in proportion as the angle of convergence increases up to 13½° only, where the coefficient is 0·95. Beyond this angle it diminishes, feebly at first, as do all variables about the maximum; at 20° the coefficient is again from 0·92 to 0·93. But afterwards the diminution becomes more and more rapid; and the coefficient would end by being only 0·65, the coefficient of small orifices in a thin side, these orifices being the extreme term of converging tubes, that in which the angle of convergence has attained its greatest value, 180°. The angle of greatest discharge will then be from 13° to 14°.

What can be the reason of this? In the conical tubes the theoretic discharge is altered by two causes, the attraction of the sides, which tends to augment it, and the contraction, which tends to diminish it, by diminishing the section of the vein a little below the exit. From the experiments of Venturi it would seem that the fluid vein, at its entrance into a tube, preserved its natural form, that of a conoid of 18° to 20°; so that the nearer the angle of the tube approached such a value, the nearer its sides will be to the vein, at the moment when, after having experienced its greatest contraction, it tends to dilate, and when it is, as it were, left to their attractive action; this action then being stronger, the discharge will be greater. But on the other hand, already at 10° of convergence, the exterior contraction begins to be sensible and to reduce the discharge; it has reduced it 5 per cent. at 18°; and after that, it will not be extraordinary that the angle of greatest discharge is found between these two values, about 14°.

The tubes of ·0656 ft. diameter at the exit, gave coefficients from one to two hundredths greater than those of the tubes of ·0509 ft. An error of 0·004 in. in the estimate of the diameter of the first set, would afford reason, to a great extent, for that difference; and the experimenter was inclined to admit a cause of that kind. The tubes of ·0509 ft., examined several times, inspired him with more confidence.

In following the coefficients of the velocity they are seen, again starting from the angle 0°, to increase like those of the discharge up to near the convergence of 10°; then they increase more rapidly; and beyond the angle of the greatest discharge, while the others diminish, these continue to increase and approach their limit, 1; they are quite near it at the angle of 50°, and even at 40°. The conical tubes, by their different convergence, form a progression of which the first term is the cylindrical tube, and the last is the orifice in a thin side; their velocity of projection, increasing with the convergence, will therefore vary from that of the additional tube to that of the simple orifice, that is to say, from $0{\cdot}82\sqrt{2gH}$ to $\sqrt{2gH}$.

In comparing the coefficients of the discharge with those of the velocity, or their successive values nn' and n', and dividing the first by the second, we shall have the series of n, or the coefficients of the exterior contraction. From the angle 0° to that of 10°, we have sensibly $n = 1$, and consequently there is no contraction; notwithstanding the convergence of the sides, the fluid particles pass out very nearly parallel to the axis. But beyond 10°, contraction is manifested; it

reduces the section of the vein more and more, and it would end by rendering it equal to that which passes from orifices in a thin side, as is seen in this Table;—

Angle.	*n.*	Angle.	*n.*
°		°	
8	1·00	40	0·88
15	0·98	50	0·85
20	0·95	100	0·65
30	0·92		

Experience having taught that cylindrical tubes certainly produce all their effect, as to the discharge, when their length equals at least 2½ times their diameter; by analogy, and for the sake of not complicating our results with the action of the friction of the water against the sides, the experimenter fixed the length of conical tubes at about 2½ times the diameter of exit; thus it was ·1312 ft. for those of ·0509 ft. diameter, and ·164 ft. for those of ·0656 ft. diameter. However, to be able to determine the effect of their length, he proposed for the tubes of ·0509 ft. diameter, two other series; in one, the common length would have been ·0984 ft., which may be regarded as the *minimum;* for the other, it would have been ·3281 ft., a dimension quite common in practice.

But this work is yet to be done; still, M. Castel has made some primary trials. For the tubes of ·0509 ft. diameter, he took five ·1148 ft. long, and, taken together, they gave as the coefficient of discharge, 0·938; next, with a length of ·1312 ft., he had as coefficient, 0·936; another tube, ·0984 ft. long, gave 0·941 instead of 0·938; and one of ·0787 ft. indicated 0·931 instead of 0·926; so that here the diminution of length would have a little increased the discharge. But with the tubes of ·0650 ft. diameter the discharge, on the contrary, was increased with the length; the length passing from ·1640 ft. to 0·3281 ft., the coefficient under the angle of 11° 52′ was 0·965; under that of 14° 12′, 0·958; and under 16° 34′, 0·950. Thus the effect of the length of tubes is far from being established; its determination demands other series of experiments.

While waiting for more extensive experiments we will assume, for each of the tubes to be employed, provided extraordinary lengths are not taken, the coefficient in the above Tables corresponding to the angle of convergence, without fear of introducing any error of moment.

As to very great conical tubes, or rather to pyramidal *troughs*, which in mills throw the water on to hydraulic wheels, we have three valuable experiments made by the engineer Lespinasse, on the mills of the canal of Languedoc. The troughs there are truncated rectangular pyramids, having a length of 9·5904 ft.; at the greater base, 2·3984 ft. by 3·199 ft.; at the lesser base, ·4429 ft. by ·6234 ft. The opposite faces make angles of 11° 38′ and 15° 18′. The head was 9·5904 ft.

The first two of the three experiments, the results of which are here given, were made on a mill of two stones, each having its wheel; in the first experiment the water was let on to only a single wheel; in the second it was let on to two at a time.

Discharge.	Coefficient.
cubic feet.	
6·7667	0·987
6·6926	0·976
6·7138	0·979

We see how little such tubes diminish the discharge; the discharge given is only one or two hundredths less than the theoretic discharge.

Conical Diverging Tubes.—Of all tubes, those which give the greatest discharge are truncated cones, fitted to a reservoir by their smaller base, and of which the opening for exit is consequently greater than that of entrance. Although very little used, they present phenomena of too much interest to be passed by.

Their property of increasing the discharge was known to the ancient Romans; some of the citizens, to whom was granted a certain quantity of water from the public reservoirs, found by the employment of these tubes, means of increasing the product of their grant; and the fraud became such, that a law prohibited their use; at least, they could not be placed within 52½ ft. from the reservoir.

Bernoulli had studied and subjected to calculation their effects; in one of his experiments he found the real velocity at the entrance of the tube greater than the theoretic velocity, in the ratio of 100 to 108; but to Venturi is principally due our knowledge of the products they can give.

The tubes which he used had a mouth-piece A B C D, Fig. 4011, presenting nearly the form of the contracted vein; A B = ·1332 ft., and C D = ·1109 ft.; the body of the tube C D F E varied in length and flare, the flare being measured by the angle comprised between the sides E C and F D sufficiently prolonged. These tubes were fitted to a reservoir kept constantly full of water; the flowing took place under a constant head of 2·8873 ft., and the time necessary to fill a vessel of 4·8384 cub. ft. was counted as in the experiments of the same author which we have already mentioned.

4011.

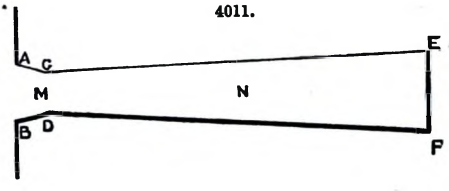

D'Aubuisson gives, in the following Table, the result of the principal observations, after having remarked that the time corresponding to the theoretic velocity was 25″·49.

Ajutage. Flare.	Ajutage. Length.	Time of Running.	Coefficient.	Observations.
° ′	feet.			
3 30	·3642	27″5	0·93	
4 38	1·0959	21	1·21	Jet very irregular.
4 38	1·5093	21	1·21	Jet did not fill the ajutage.
4 38	1·5093	19	1·34	To fill ajutage a projecting body introduced.
5 44	·5775	25	1·02	
5 44	·1936	31	0·82	Exit mouth = that of entrance.
10 16	·8662	28	0·91	Jet did not fill ajutage.
10 16	·1476	28	0·91	Jet very regular.
14 14	·1476	42	0·61	Jet detached from sides.

Venturi concluded from his experiments, that the tube of the greatest discharge ought to have a length nine times the diameter of the smaller base, and a flare of 5° 6′; Fig. 4011 represents it; it would give, adds the author, a discharge 2·4 times greater than the orifice in a thin side, and 1·46 times greater than the theoretic discharge. Moreover, he observes, that the dimensions of the tube should vary with the head.

To one of the above-mentioned tubes, that which gave 4·8384 cub. ft. in 25″, he fitted three tubes, and plunged them into a small bucket filled with mercury; the first at the origin D, Fig. 4012, of the tube; the second at one-third of its length, and the third at two-thirds. The mercury was raised respectively ·3937 ft., ·1509 ft., and ·0518 ft.; this would be equivalent to columns of water 5·348 ft., 2·067 ft., and ·7054 ft. According to the theory of Bernoulli, the pressure at the point of greatest contraction D, where the velocity is $\frac{4}{2.5}\sqrt{2g \times 2{\cdot}8873}$ ought to have been $2{\cdot}8873 - 2{\cdot}8873\ (\frac{4}{2.5})^2 = -5{\cdot}2618$ ft.; the experiment of Venturi gave — 5·348 ft.

4012.

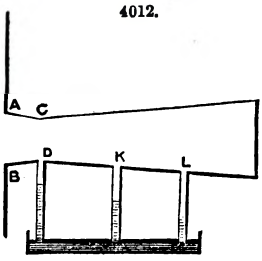

Eytelwein also used diverging tubes in experiments, the results of which are directly interesting in practice. He took a series of cylindrical tubes ·0853 ft. diameter, and of different lengths, which he successively fitted to a vessel full of water; at first separate; then applying to the front extremity the mouth-piece M, which had nearly the form of the contracted vein; then applying to the other extremity the tube M, Fig. 4013, of the form recommended by Venturi; lastly, applying at the same time the mouth-piece and the tube.

4013.

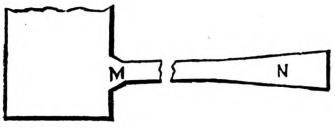

The flowing took place under a mean head of 2·3642 ft. The principal results obtained are given in the following Table.

Here the head was not constant. At each experiment the vessel was filled up to 3·0841 ft. above the orifice, and the fluid was suffered to fall until the surface was only 1·7389 ft. above the orifice; the constant head, which would have given the same discharge in the same time, would have been 2·3642 ft. Let, generally, H′ be that constant head; H the head of the reservoir at the commencement of the flowing, and h that at the end, we shall have $H' = \left(\frac{H - h}{2\,(\sqrt{H} - \sqrt{h})}\right)^2$.

The occasion to make use of this formula will be presented quite often in practice.

Length of Tube.	Coefficient of discharge of the tube, only according to		Discharge of the tube alone being 1, Discharge	
	Experiment.	Formula of Conduits.	With Mouth-piece.	With Ajutage.
feet.				
·0033	0·62	0·99		
·0853	0·62	0·97	1·56	
·2559	0·82	0·95	1·15	1·35
1·0302	0·77	0·86	1·13	1·27
2·0605	0·73	0·77	1·10	1·24
3·0907	0·68	0·70	1·09	1·23
4·1176	0·63	0·65	1·09	1·21
5·1479	0·60	0·61	1·08	1·17

These experiments show;

1st. The rate according to which the length of the tubes diminishes the discharge; and this, up to a point where the formula for the motion of water in conduit pipes may be applied. The numbers of the third column indicate that this application can take place for small tubes, those under ·0984 ft. diameter, when their length exceeds 6·562 ft. These experiments thus in part fill up the void which existed in our knowledge of additional tubes and conduit pipes.

2nd. That the increase of the discharge proceeding from the flare given to the mouth of entrance of pipes, diminishes in proportion as their length is greater. It were desirable that these experiments had been carried further, for the purpose of knowing what would have been the result of this diminution in large conduits; until this is done, and however small may be the good effect of the flaring at the entrance, it is proper not to neglect it.

3rd. The effect of the flaring at the exit also diminishes in a ratio more rapid still, in proportion as the pipes increase in length. Eytelwein having taken one 20·6 ft. long and of ·0853 ft. diameter throughout, found no difference in the discharge, whether he did or did not use the tube with flaring end.

On fitting this tube immediately to the reservoir, the discharge was 1·18, the theoretic discharge being 1. On fitting it to the mouth-piece, but without the intermediate tube, it rose up to 1·55. The mouth-piece alone gave only 0·92; so that the effect of the tube N added to the mouth-piece M, was to augment the discharge in the ratio of 0·92 to 1·55, or of 1 to 1·69.

Venturi had that of 19″ to 42″, or 1 to 2·21. In the two experiments which furnished the terms of this last ratio, the velocities of the water at the passage through the section C D, Fig. 4011, were therefore as 1 to 2·21; and consequently the heights due as 1 to 4·89, since they follow the ratio of the squares of the velocities.

In the experiment which gave the term 1, that where the mouth-piece M alone was used, the actual velocity, which was obtained by dividing the discharge by the section, was 11·9297 ft.; it corresponds to a generating head of 2·2114 ft. The head corresponding to the velocity in the second experiment will then be $2{\cdot}2114 \times 4{\cdot}89 = 10{\cdot}8137$ ft.; whence it follows that the discharge was equal to what would have occurred if, instead of adding the tube N to the mouth-piece M, the water had been raised in the reservoir, above the level which it had during the flowing, $10{\cdot}8137 - 2{\cdot}2114 = 8{\cdot}6023$ ft. Thus the accelerating effect of the velocity due to the diverging tube is measured by a column of water 8·6023 ft.; this is more than a quarter of the weight of the atmosphere. This is a very considerable effect for a force which seems quite small; for we see no other physical cause of the augmentation in the discharge produced by the tube, than the action of the sides, and, in short, the molecular attraction.

On Flowing under very Small Heads.—When the head over the centre of the orifice is very small compared to the height (vertical dimension) of that orifice, the *mean* velocity of the different lines of the fluid vein, that is to say, the velocity which, being multiplied by the area of the orifice, gives the discharge, is no longer that of the central line. It differs from the velocity of the central line as much more as the head is smaller; it will be about a hundredth less if the head is equal to the height, and a thousandth less if the head is three times (3·2) greater than the height. Let us see what theory teaches us in this respect; and first, the law which it indicates for the velocity of the fluid lines, in proportion as the point from which they issue is lower than the level of the reservoir.

Let a vessel be filled with water up to A, Fig. 4014; upon its face A B, which we will suppose vertical for greater simplicity, imagine below each other, a series of small holes, of which B will be the lowest. Designate by H the height A B; the velocity of the line passing out at B will be $\sqrt{2gH}$; and if B C be made equal to that quantity, it will represent that velocity. For every other point P, below the level of the reservoir, the distance A P or x, the line P M, which would represent the velocity of the fluid at its exit from that point, would be $\sqrt{2gx}$, and calling it y, we should have $y = \sqrt{2gx}$. If through the extremity of all these lines P M, a curve be made to pass, they will be its ordinates, and the heights A P or x will be its abscissas; and since $y^2 = 2gx$, this curve may be taken as a parabola having $2g$ or 64·364 ft. for its parameter.

4014.

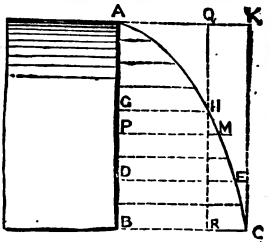

Thus the velocity of a fluid line passing from a reservoir at any point, is equal to the ordinate of a parabola, of which twice the action of gravity is the parameter, the distance of this point below the level of the reservoir being the abscissa.

Suppose now, that instead of opening a series of small holes on the face A B, there had been perforated in it, from top to bottom, a rectangular slit, of the breadth l; let us find the expression of the discharge.

Divide this opening, in thought, by means of horizontal lines very near each other, into a series of small rectangles. The volume of water which will pass from each of these in a second, or its discharge, will evidently be equal to the volume of a prism which shall have for its base the small rectangle, and for its height the corresponding ordinate. The sum of all these little prisms, or the total discharge, will evidently be equal to another prism, having for its base the parabolic segment A B C M A, and for its height or thickness, the width of the slit. Now, according to a property of the parabola, this segment is two-thirds of the rectangle A B C K, whose surface is $AB \times BC = H \times \sqrt{2gH}$. Thus the discharge through the rectangular opening of which H expresses the height and l the breadth, is $\frac{2}{3} l H \sqrt{2gH}$.

We now seek the discharge through a rectangular orifice open on the same side, but from B to D only, and having the same breadth l; call h the head A D, on the upper edge of the orifice; the discharge of the slit which we suppose from A to D would also be $\frac{2}{3} l h \sqrt{2gh}$. Now, it is evident that the discharge through the rectangular orifice of which B D is the height, will be equal to the difference of the discharges through the two slits, and which consequently will be

$$\frac{2}{3} l \sqrt{2g} \,(H\sqrt{H} - h\sqrt{h}).$$

Let us revert to the mean velocity; and first to that which we have when the slit is quite open. Let G be the point from which the fluid line animated with this velocity proceeds; if we

make A G $= z$, it will be $\sqrt{2gz}$; being multiplied by the area of the slit $l \times H$, it must give the discharge. But we have seen that this discharge was also expressed by $\frac{2}{3} l H \sqrt{2gH}$; we shall then have $l H \sqrt{2gz} = \frac{2}{3} l H \sqrt{2gH}$; whence $z = \frac{4}{9} H$, and consequently $v = \sqrt{2g \frac{4}{9} H} = \frac{2}{3} \sqrt{2gH}$.

Thus the mean velocity will be two-thirds of the velocity of the lower line. In fact, G H, which represents the first, is, according to the above-mentioned property of the parabola, two-thirds of B C, which represents the second.

For the rectangular orifice of which B D or $H - h$ is the height, z' being the height due to its mean velocity, we should in like manner have $(H - h) l \sqrt{2gz'} = \frac{2}{3} l \sqrt{2g} (H \sqrt{H} - h \sqrt{h})$; whence $z' = \frac{4}{9} \left(\frac{H \sqrt{H} - h \sqrt{h}}{H - h} \right)^2$.

Example.—There is a prismatic basin, at the bottom of which is a rectangular orifice ·82 ft. base, and ·3937 ft. height; and during the flowing the fluid surface is constantly ·7218 ft. above the lower edge of the orifice. We then have $H = ·7218$; $h = ·7218 - ·3937 = ·3281$; thus $z' = \frac{4}{9} \left(\frac{·7218 \sqrt{·7218} - ·3281 \sqrt{·3281}}{·7218 - ·3281} \right)^2 = ·48$ ft.; consequently the mean velocity will be $\sqrt{2g \times ·48} = 5·558$ ft.

D'Aubuisson makes the following observation, which applies more particularly to the case of heads.

During the flow through an orifice, the surface of the fluid in the reservoir, starting from certain points, is curved, and inclines towards the side in which the orifice is pierced; so that the height or vertical distance of the surface, above any part of the orifice, is greater on the up-stream side of the points where the inflection begins, than near to and touching the side. It is the first of these heights or heads which must always be introduced into the formulas of flowing. The distance between the orifice and the line where the fluid surface joins the side is very often introduced (into the formulas); from this there results an error in deficiency, in estimating the discharges which, in some cases, very rare to be sure, may extend even to a tenth of the discharge.

Such errors diminish when the head increases; and according to the experiments of MM. Poncelet and Lesbros, who have also fully explored this question, they will be insensible when the heads exceed ·4921 or 6562 ft., say 6 or 8 inches. Yet in very great orifices the depression of the surface is still perceptible; D'Aubuisson had seen it from 1½ to 2 in. against the sluice-gates of the canal of Languedoc, when the two paddle-gates were open.

If the orifice had a figure different from the rectangle, the expression of the mean velocity, and consequently of the discharge, would be more complicated; its determination would become a problem of analysis of little utility in practice, where great orifices are almost always rectangular. The solution of these problems can be seen in the Architecture Hydraulique of Belidor; and in the Hydrodynamique of Bossut. For the present we shall limit ourselves to that which concerns the circle. Designating by d the diameter, by h the head above the centre, we have for the expression of the discharge, $\pi' d^2 \sqrt{2gh} \left(1 - \frac{d^2}{128 h^2} - \frac{d^4}{3277 h^4} - \text{&c.} \right)$; this discharge is that which corresponds to the velocity of the central line diminished in the ratio indicated by the complex factor.

The discharges, of which we have just given the expression, are theoretic discharges; for reducing them to actual discharges it is necessary to multiply them by the coefficients deduced from experiment.

These also will be furnished us by MM. Poncelet and Lesbros. We indicate them in the following Table;—

Head upon the centre.	Height of Orifices.					
	·6562 ft.	·3281 ft.	·1610 ft.	·0984 ft.	·0616 ft.	·0328 ft.
feet.						
·03281						0·712
·0656				0·644	0·667	0·700
·0984				0·644	0·663	0·693
·1312			0·624	0·643	0·661	
·1640			0·625	0·643	0·660	
·1968		0·611	0·627	0·642		
·2625		0·612	0·628	0·640		
·3281		0·613	0·630	0·638		
·3937	0·592	0·614	0·631			
·4921	0·597	0·615	0·631			
·6562	0·599	0·616	0·631			
·9843	0·601	0·617				
1·6404	0·603	0·617				
3·2809	0·605					

The numbers above are the true coefficients of the contraction of the fluid vein, or the coefficients of the reduction of the theoretic discharge to the actual discharge; for theory gives no other general formula for flowing through orifices than $\frac{2}{3} l \sqrt{2g} (H \sqrt{H} - h \sqrt{h})$.

That which was established $S\sqrt{2gh}$; where $h' = \frac{1}{2}(H + h)$ applies only to particular cases, very frequent, to be sure, where h' is three or four times greater than $H - h$. In the other cases it is erroneous, and the coefficients which are adapted to it, and which it has served to determine, are erroneous also: they are the coefficients found above the transverse lines which divide the columns. (The coefficients below the lines, although determined by the aid of that formula, are accurate, coinciding with those obtained by the general formula.) Finally, in the first, $mS\sqrt{2gh'}$, the error of the coefficient m is compensated by the error of the formula, and the discharges which it gives are sensibly identical with those of the other; and as it is, besides, more simple, it is commonly employed in all cases.

Example.—What would be the discharge of a rectangular orifice ·9843 ft. wide and ·49215 ft. high, under a head of only ·16405 ft. on its upper edge? Here $H = ·16405 + ·49215 = ·6562$ ft. and $l = ·9843$ ft. The head on the centre, therefore, is ·410125 ft.; the coefficient which corresponds to this head, according to the above Table, is nearly ·603; a mean term between ·593 and ·614. Thus the discharge will be $\frac{2}{3} \times ·603 \times ·9843 \times 8·02052\,(·6562\sqrt{·6562} - ·16405\sqrt{·16405}) = 1·476$ cub. ft. The ordinary formula, with its coefficient ·592, taken from the ordinary Table, p. 1893, would have given $·592 \times ·9843 \times ·49215 \times 8·02052\sqrt{·410125} = ·1473$ cub. ft.

We have a circular vertical orifice of ·0888 ft. diameter, with a head of ·0592 ft. above the centre. What will be the discharge? Here $d = ·0888$ ft., $h = ·0592$ ft.; so that the expression, p. 1907, becomes $·012086\left(1 - \frac{1}{56·89} - \frac{1}{647·3}\right) = ·011863$ cub. ft. This is the theoretic discharge; and to have the actual discharge it is necessary to multiply it by the coefficient indicated in the Table. We there find 0·667 for an orifice of ·6562 ft. diameter, under a head ·0656 ft. (or of ·0592); under this same head, we then also have ·0644 for an orifice of ·0984 ft., from which we shall take 0·650 for the orifice of ·0888 ft. The actual discharge will then be $0·65 \times ·011863 = ·00771$ cub. ft.

Hydraulic Gauge.—Darcy's gauge, the extreme accuracy of which has enabled scientific men to remove the theory of running water from the domains of speculation into those of almost absolute certainty. Darcy's gauge is a modification of an instrument invented by M. Pitot; and it will be necessary to explain the nature and working of this instrument in order to give a complete explication of the one with which M. Darcy's name has become connected. In the year 1732 M. Pitot communicated to the Academy of Science a discovery which he had made concerning the laws that regulate the motion of water in streams; he presented to that learned body the instrument by means of which the discovery had been made. His invention had enabled him to measure with considerable accuracy the velocity in any given point of the fluid fillets of which a stream is composed, and the discovery which he had made was that the velocity of water decreases as we approach the bottom or the sides of the current, a fact that is well known and well understood in the present day, but one that before Pitot's time had not been thought of, and that for a long time after was warmly disputed in consequence of a false theory then held concerning the motion of fluids.

Pitot's gauge consisted of a long wooden rod of triangular section, to one face of which two glass tubes were fixed. One of these tubes was bent horizontally at its lower extremity; the other, on the contrary, descended vertically to the level of the curved portion of the first. Pitot thought that if this instrument were exposed to the current of water it would give, by the difference of level existing between the two columns of water in the tubes, the height due to the velocity of the fluid at the point under consideration; and that it would then be easy to deduce the required velocity by means of the relation $V^2 = 2gh$, h being the difference observed. The idea was an ingenious one, and moreover it was new. Yet Pitot's instrument was looked upon by practical men with disfavour (although they continued to use it). It was considered a matter of pure speculation from which nothing practical could be derived. And to obtain the mean velocity of a stream of water recourse was always had, either to vertical floats equal in length to the depth of the portion of water whose mean velocity it was required to find, or to some other instrument more or less complicated and needing the assistance of a time-marker. The reason of this lies in the fact that Pitot's instrument, wonderful as it was, was nevertheless in some degree founded in error. Reduced to its simplest theoretical form it might be constructed of a single glass tube horizontally bent at its extremity: the water entering through the horizontal portion which is exposed to the current, holds itself in equilibrium in the vertical tube at a height above the surface of the current equal to $h = \frac{V^2}{2g}$, V being the velocity of the fluid fillet under consideration. When circumstances enable us to measure h and g exactly, we may deduce V from this height with sufficient precision. But usually the chopping of the water against the outer surface of the tube and its supports does not allow us to compare the level of the water in the tube with that of the surface of the stream troubled by the presence of the instrument, and even this surface of the stream is not easily measured on account of the undulations which cover it. It was to avoid this difficulty, which Pitot no doubt discovered by experience, that he added the second tube, the lower end of which was beneath the surface of the water.

Pitot thought that the level of the water in the straight tube must be equal to that of the surface of the stream, and that in this way the difference of level or h, the height due to the velocity, might be readily obtained. Here lay the first error. When a straight tube is placed in a stream of water, the water in the tube stands below the superficies of the stream by a quantity in a constant ratio with the square of the velocity of the fluid fillet passing beneath its lower orifice. Thus the difference h between the levels of the water in the tubes represents a quantity greater than the height due to the actual velocity of the fluid fillet in question. Hence arose an error which rendered Pitot's conclusions inexact. Besides this, the oscillations were very strong in tubes so arranged, especially as the orifices had the same diameter as the tubes; nay more, it was even

deemed necessary to make these orifices funnel-shaped. Thus we see how it was that Pitot's tube could be of no practical use. In the first place its construction was founded upon an erroneous principle, and in the second place the oscillations which took place in the tubes rendered it impossible to estimate truly, especially in the case of feeble velocities, the required difference of level.

We will now consider the modifications which Darcy has made in Pitot's instrument, modifications that have rendered it exact in its results and easy of application. Many careful experiments showed him that if, in a stream of water, in any point of the fluid having a velocity V, we place a vertical tube bent horizontally at its lower extremity, and having its orifice placed first against the stream, then in the direction of this latter, and lastly rectangularly to its direction, there exists a constant relation between the theoretical height $\frac{V^2}{2g}$ due to the velocity of the fillet under consideration, and the quantities h', h'', h'''; h' representing in the first case the height by which the level rises in the vertical branch above the surface of the stream; h'' and h''' the quantities by which the level sinks below the surface of the same stream on the other two hypotheses. In this way, like General Anstruther, he changes the erroneous value given to g. We may therefore state;—

$$\frac{V^2}{2g} = m h', \qquad \frac{V^2}{2g} = m h'', \qquad \frac{V^2}{2g} = m h''',$$

combining either the first and second, or the first and third of these equations;—

$$V = \sqrt{\frac{m m'}{m + m'}}\sqrt{2g(h' + h'')} = \mu\sqrt{2g(h' + h'')};$$

$$V = \sqrt{\frac{m m''}{m + m''}}\sqrt{2g(h' + h''')} = \mu'\sqrt{2g(h' + h''')}.$$

Seeking in the tables the velocities corresponding to the heights $h' + h''$, $h' + h'''$, we find velocities V′ and V″; the above equations become therefore $V = \mu V'$ and $V = \mu' V''$. It will be seen from this that it is not necessary to know the level of the surface of the water in which the instrument is placed in order to determine the required velocity. And it must be remarked further that the oscillations in the tubes have been almost nullified by giving the orifices a diameter of only 1½ millimètre, whilst that of the tubes is 1 centimètre. But as these oscillations, however feeble they might be, would still cause the observer some trouble, a cock has been added by means of which the lower orifices of the tubes may be closed simultaneously. These orifices being closed, all communication with the stream is cut off, and the difference may be read upon the tubes and the velocity deduced with perfect ease and precision.

Darcy's gauge possesses another important modification. Most hydrometrical instruments have the grave defect of altering the velocity which they are designed to measure, by the disturbance which they cause in the fluid mass. It was necessary therefore to diminish the size of the gauge, and to remove as far as possible from the divided scale upon which the tubes are fixed, the orifices through which the fluid fillet enters whose velocity it is required to determine. To obtain this double result the scale to which the tubes are fixed is made as thin as possible and bevelled, and copper tubes of a very small diameter affixed below to the glass tubes, the ajutages being placed at the extremity of these copper tubes. Here another question arises; How are we to measure the velocities at the surface or even of the whole liquid mass equal in depth to the length of the copper tubes through which the water cannot be seen? This result has been obtained by the following means: the two glass tubes communicate with each other in their upper portion by means of a copper tube which is hermetically adjusted to them; upon this copper tube a cock is placed which, according as it is open or shut, puts the tubes in communication with the atmosphere, or cuts off this communication. Above this cock is a little mouth-piece, by means of which an imperfect vacuum is produced by suction; the water ascends in the glass tubes to the height desired, and is kept in that position by closing the cock which cuts off the communication with the atmosphere. The upper cock offers the additional advantage of enabling the operator to determine, with an instrument of a height much less than the depth of the stream, the velocity of the latter at a given depth. To effect this, he has merely to lower the instrument 1, 2, or 3 mètres into the water by means of an iron rod, to which it is fixed in such a way as to preserve its mobility about a vertical axis, and the orifice of the horizontal portion of Pitot's tube is kept directed against the stream by means of a kind of rudder.

In the former case the instrument acts under dilated air; in the latter under more or less compressed air. But it is evident that in both cases the differences of level between the tubes are the same as if the operation were performed under the influence of atmospheric pressure.

Fig. 4015 represents the most approved form of Darcy's gauge. The vertical glass tubes are $1^m{\cdot}25$ in length; the two small copper tubes placed on the lower portion are enclosed in a kind of box, also of copper, Figs. 4015 and 4018, $0^m{\cdot}77$ long, $0^m{\cdot}06$ broad, and only $0^m{\cdot}011$ thick; this box ends on both sides in a sharp angle for the purpose of lessening as much as possible the shock of the water, a result which is perfectly obtained, as the instrument when placed in the water causes no appreciable disturbance.

The measurement of the velocities in a given point of the section of a stream is effected in the following manner. Above the stream, at the point at which the experiments are to be made, a slight temporary bridge is constructed, and a stoutish rail fixed for the purpose of supporting the weight of the instrument. On the back of the gauge-tube is an arrangement by means of which, with the aid of a thumb-screw, it may be fixed at the height necessary to bring the ends of the

tubes to the required point. An iron handle enables the assistant upon the bridge to hold the tube in an exactly vertical position indicated by a plumb-line.

The instrument being thus placed, and the upper and lower cocks closed, the operator sucks out by the mouth-piece O, Figs. 4015, 4016, a portion of the air contained in the tubes, so as to make the water ascend to a height convenient for reading, then he closes the upper cock R. The difference of level between the two columns of water in the instrument then establishes itself at once; but both are subject to continual oscillations. When the operator wishes to read the difference, he closes, by means of a string, the lower cock R′; the columns of water then become motionless, and their respective heights may be read without the slightest difficulty.

We conclude these remarks with an example of the method of using this instrument, taken from M. Darcy's work on Hydraulics. It must be remembered that every possible precaution had been taken to ensure a uniform flow of water in the course selected for experiment. A breadth of 2 mètres was preserved throughout; the sides were carefully boarded, and the bottom rendered smooth and hard, and of a uniform descent. The depth of the stream was carefully measured throughout in the following way. Upon each of the cross-pieces of timber which supported the boarded sides of the water-course were placed three nails, one in the middle, and one within $0^{m}\cdot33$ of each side. The height of each of these nails above the bottom of the water-course was then measured, as well as their height above the surface of the water; the difference of these heights evidently gave the depth of the stream upon the vertical line passing through each of the three nails. This operation, which required great care, was performed by means of a slide-rule, Fig. 4020, terminating in a sharp iron edge. The operator rested the slide upon the cross-piece over the stream, and let the rule down till the end touched the surface of the water. The maximum velocity was measured both by means of the gauge and by means of floats. The use of these floats required great precautions; sometimes simple wafers were used, sometimes small pieces of wood or cork, weighted with lead, so as to skim along the surface of the water, Figs. 4021, 4022. By means of a time-marker indicating fifths of a second, the time occupied by each float in traversing a space of 40 or 50 mètres was exactly determined. The operation was several times repeated; and only those in which the float had followed perfectly the axis of the current were taken into account at all; even then the mean of five or six results, at least, were taken. With respect to the results obtained by the gauge, the difference of height in the two

4015

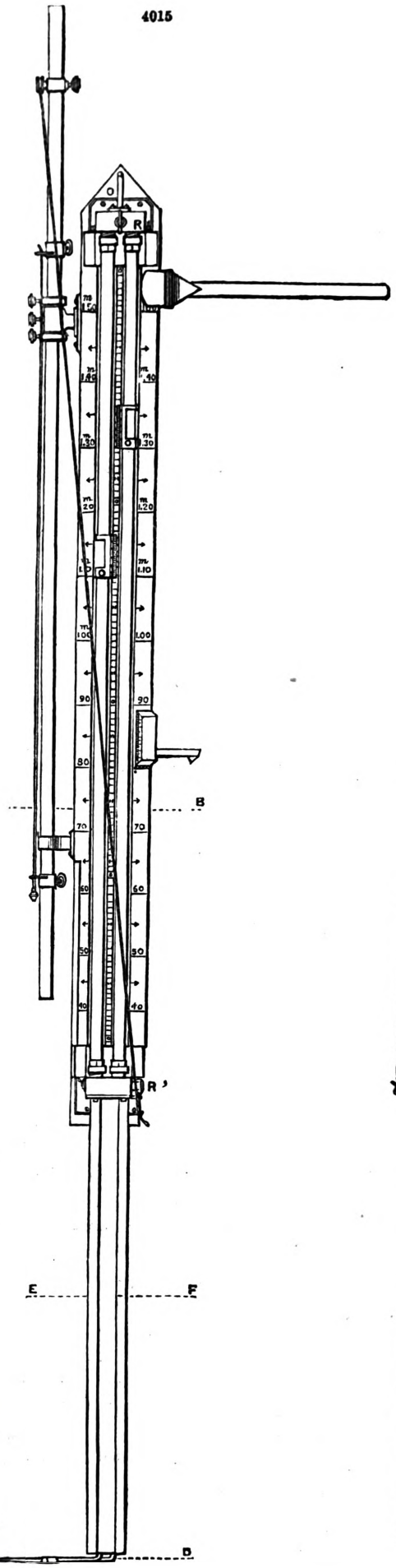

4016.

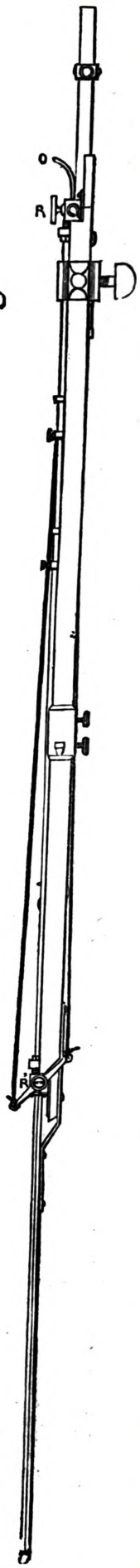

columns of water being constantly variable, care was taken in reading to seize the moments of the *maxima* and *minima*. Two or three *maxima*, and as many *minima* were noted, and the mean of all the operations taken.

EXAMPLE.

Heights		Differences.	Observations.
In the tube against stream.	In the tube with stream.		
mètres.	mètres.	mètres.	
0·953	0·822	0·131	Maximum.
0·948	0·830	0·118	Minimum.
0·950	0·822	0·128	Maximum.
0·945	0·825	0·120	Minimum.
0·933	0·803	0·130	Maximum.
0·925	0·808	0·117	Minimum.
	Mean	0·124	

Whence $V = \mu \sqrt{2g \times 0^m \cdot 124}$. Our old friend, g, plays a great part here, see GUNNERY.

4017.

Section through A B.

4018.

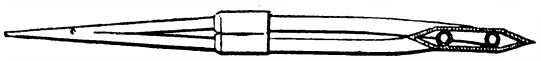

Section through E F.

4019.

Section through C D.

4021.

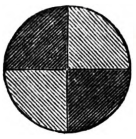

4022.

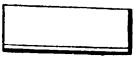

Elevation.

Cork float weighted with lead. Plan.

4023.

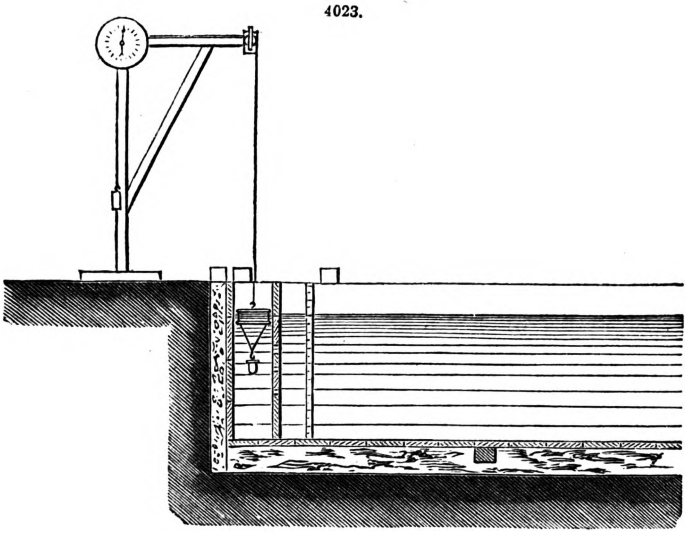

The dial-float, Figs. 4023, 4024, was used by M. Darcy to secure an unvarying level in the water-course in which his experiments were made. This float, Fig. 4023, consisted of a zinc floating piece weighted with lead; to the upper portion was fixed a piece of ribbon which passed over two pulleys, and which was kept tight by means of a weight attached to its other extremity. The axis of one of the pulleys formed the centre of a dial, Fig. 4024, $0^m \cdot 32$ in diameter; a small steel index marked upon this dial the slightest rotary motion of the pulleys, and consequently the slightest variations of level. The float was enclosed on all sides by a vertical wooden casing, forming a kind

4024.

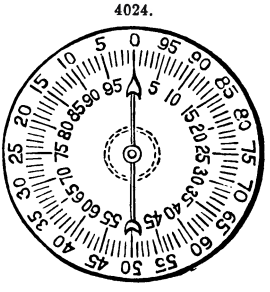

4020.

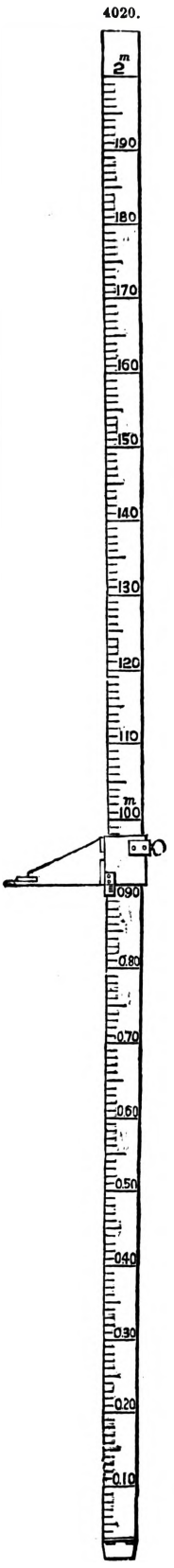

Rule for measuring the depth of water.

of well; the water contained in this well was in communication with the surrounding water only at the bottom by means of small holes in the casing. The object of this arrangement was to prevent the irregular motion of the surface from disturbing the float. The assistant whose duty it was to attend to the water-gates, was able, by glancing to this dial, to keep the level of the water constant within 1 or 2 centimètres.

See ARCHIMEDIAN SCREW. BARKER'S MILL. BAROMETER. BARRAGE. BOILER. CANAL. DAMMING. DISPLACEMENT. FLOAT WATER-WHEELS. HYDRAULIC MACHINES, *Varieties of*. PUMPS AND PUMPING ENGINES. RESERVOIRS. RIVERS. TURBINE WATER-WHEELS. WEIRS.

HYDRAULIC MACHINES, VARIETIES OF. FR., *Machines hydrauliques*; GER., *Wassermaschinem*.

Hydraulic Motors.—It is an incontestable fact that hydraulic motors render great and frequent service to industry; for though they are not adequate to every emergency, as steam-engines are, they possess the no small advantage of requiring only the first outlay necessary to establish them, the redemption of which with the interest accruing thereto, added to the expense of repairing, which is very small, constitute the only general costs of the motive power of a mill driven by water.

The disadvantage inherent to hydraulic motors lies in the variations of level and volume to which a fall of water is liable; whence it follows that the power employed through its medium is not constant throughout the year; in some seasons it may be insufficient, in others greater than the requirements of the mill demand. But, as the productive power of a mill must generally be regular and constant, the regulating the power of water-courses becomes a matter of great importance. Unhappily the causes of the variations of level and volume in a stream of water are such that, in most cases, they can be only imperfectly counteracted, for the remedy consists simply in establishing large reservoirs in which the water may accumulate during the rainy seasons, and from which it may be drawn in nearly constant quantities, so that the uniform and constant discharge a minute, for example, multiplied by the number of minutes in the year, would give the total volume furnished in that space of time by the dam in question. This exactness, however, cannot be attained; but we have not yet succeeded in establishing a rational state of things. The periodic and frequent inundations which take place show how little care we take to profit as much as possible by a motive power which nature offers us almost for nothing. A few barrage-reservoirs have indeed been constructed here and there; but their number is greatly inadequate to the requirements of industry, and their construction has not yet tempted private speculation and energy. If the enormous sums of money which have been sent out of the country to be swallowed up in bubble undertakings had been expended in improving our water-courses, navigation, agriculture, and manufactures of all kinds would have received immense benefits.

Our examination of motors, or more accurately, hydraulic *receptacles*, will comprise the three following categories;—1, *ordinary* hydraulic wheels with a horizontal axle, utilizing either the weight of the water or the velocity due to its fall; 2, *turbines* with a vertical and with a horizontal axis, utilizing the velocity and consequently the *vis viva* of the water; 3, *reciprocatory engines*, or motors worked by water pressure, in which the water acts upon a piston having an alternating rectilinear motion. We purpose here to show the actual state of progress realized in the construction of this widely-known class of motors.

Preliminary General Notions.—The *gross* power of a water-mill is found by multiplying the weight P of the volume furnished by the stream a second, by the height H of the fall. Dividing this product by 75 kilogrammètres (the work corresponding to 1 horse-power) we get the gross power F expressed in horse-power,

$$F = \frac{PH}{75}. \qquad [1]$$

The *effective* power of the mill depends solely upon the kind of motor adopted; it is the product of the gross power by the useful effect K of the motor;—

$$\text{Effective power } Fe = K\frac{PH}{75}. \qquad [2]$$

It is therefore necessary in each particular case to choose the motor best adapted to the conditions of fall and volume in the stream to be used. The rules for the establishing of water-wheels are the object of a special study, and would be out of place here; but we will show the application of them in the critical examination which we purpose to make.

Common Water-wheels with a Horizontal Axle.—These comprise three principal classes;—

Wheels which receive the water on the top, or in a point situate between the summit and the horizontal plane passing through the axis. These are called *overshot wheels.*

Wheels which receive the water between their centre and the bottom. These are called *breast-wheels.*

Wheels which receive the water at the bottom, and upon which the water arrives with a velocity due to a height nearly equal to that of the fall. These are called *undershot wheels.*

Overshot Wheels.—These wheels are applicable to high falls, that is, comprised between 3 and 12 mètres; above this limit their construction becomes difficult and costly.

When the stream has only a very small discharge, not exceeding 300 litres a second, the canal which brings the water to the wheel is brought out to the crown of the wheel by a kind of trough, the bottom of which is cylindrical, *a*, nearly concentric with the wheel itself, Fig. 4025. This bottom, which is usually of wood, terminates in a horizontal plank forming the overfall, which is placed at about $0^m{\cdot}400$ short of the vertical line drawn through the axis of the wheel. The water flows over in a sheet, the thickness of which must not exceed $0^m{\cdot}150$ to $0^m{\cdot}200$ at the most.

We see at once that this system of wheel does not admit of variations in the level of the upper lade, for the smallest variations in this level would be great relatively to the thickness of the sheet of water on the overfall, and would cause considerable variation in the expenditure of water and consequently in the force of the wheel and its velocity; and that the wheel must never dip into the tail-water, because the immersion of the buckets would prevent the efflux of the water and lessen the work of the wheel. Therefore, if the level of the tail or back water varies, the bottom of the wheel must be fixed at the highest level.

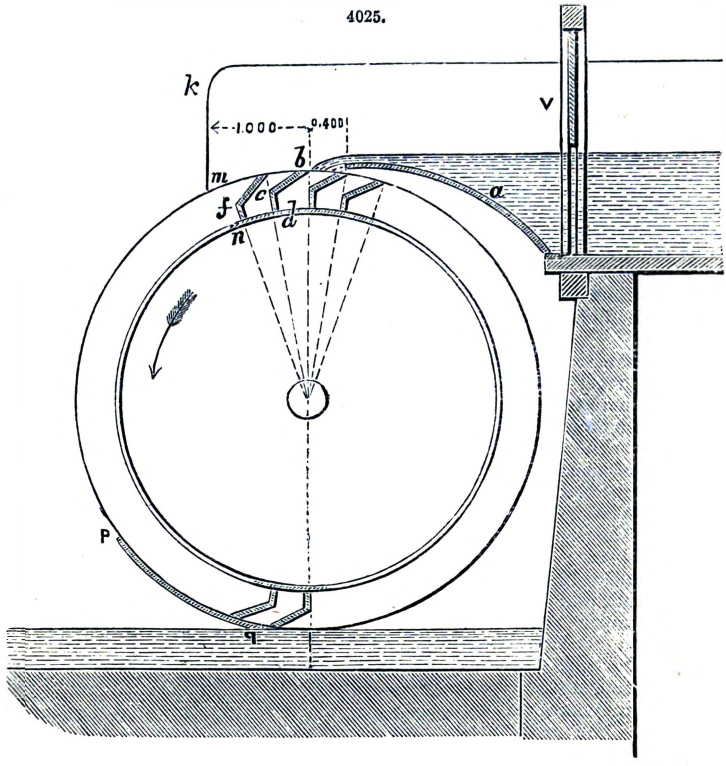

Overshot wheels of this kind, that is, *without a head of water*, are only suitable to streams that are nearly constant in their flow, and to mills that offer a regular resistance, such as corn and spinning mills. These wheels may be constructed wholly of wood, of wood and iron, or wholly of iron (cast iron, wrought iron, and plate iron). Two cheeks k placed on each side of the trough enable several buckets to be filled every time the wheel is started. These cheeks should extend about 1 mètre beyond the vertical passing through the axis of the wheel. The sluice V fixed at the head of the trough is only for the purpose of stopping the wheel; when the wheel is going, the sluice is wholly raised, and consequently does not regulate the discharge.

When the buckets are of wood, which is usually the case, they are composed of two pieces, $b\,c$ and $c\,d$, one of which is fixed in the direction of the radius, and the other in the direction of the *relative* velocity of the inflow of the water into the wheel. The direction of this relative velocity is found by comparing the *absolute* velocity with which the water arrives upon the wheel, and an equal velocity directly opposed to the *linear* or *tangential* velocity from a point in the outer circumference of the wheel. Usually the distance of two consecutive buckets apart is equal to the depth $m\,n$; this depth should not exceed $0^{m}\cdot400$. The buckets are enclosed between rims or shroudings fixed to the arms. If the breadth of the wheel exceed $1^{m}\cdot50$, one or two intermediate rims are required, supported by a system of arms similar to those for the outer rims.

The rotatory motion of the wheel impresses upon the surface of the water in each bucket the form of a portion of a cylindrical surface, the generatrices of which are horizontal, and the straight section of which is an arc of a circle, whose radius is expressed by $\frac{g}{\omega^2}$, ω representing the angular velocity of the wheel. The water has a tendency to leave the wheel before the lowest point is reached; the consequence of this is a loss of work great in proportion to the height of the point p, where the anticipated discharge begins, above the level of the lower mill-race. This loss may be avoided by fixing a circular apron $p\,q$ around the lower portion of the wheel from the point p.

Overshot waterfalls, without a head of water, ought not to receive more than 100 litres of water a second to the mètre of breadth. Their effective work varies from $0\cdot75$ to $0\cdot85$ of the gross work. If the level of the upper mill-race and the volume of water are variable, the wheel cannot be fed by means of an overfall; arrangements must indeed be made by which the volume of water expended by the wheel may be varied, according to circumstances, without changing the velocity with which the water flows upon the wheel. These conditions are satisfied by constructing a vertical sluice a with a head of water h', Fig. 4026, so that the distance $m\,n$ from the bottom of the sluice to the floor of the pen-trough may in all cases be much less than the height h' of the head of water. A wheel-race $b\,c$, inclined to about $\frac{1}{10}$, brings the water upon the wheel; this race is provided with two side cheeks d, which extend about 1 mètre beyond the vertical line, passing through the axis of the wheel. The construction of this system of wheel differs in nothing from that described above. As we have already stated, the wheel must not dip into the back-water, and the anticipated discharge of the water may be prevented by the cylindrical apron shown in Fig. 4026.

The height h′ of the head of water depends upon the total height H of the fall, and on the variations of level in the upper mill-race. It is not possible to fix absolute figures with respect to this; yet the values adopted should approximate to the following numbers;—

Values of H.	Values of h′.
3 to 4 mètres.	0·60 mètre.
4 to 6 „	0·70 „
6 to 7 „	0·80 „
7 to 8 „	0·90 „

4026.

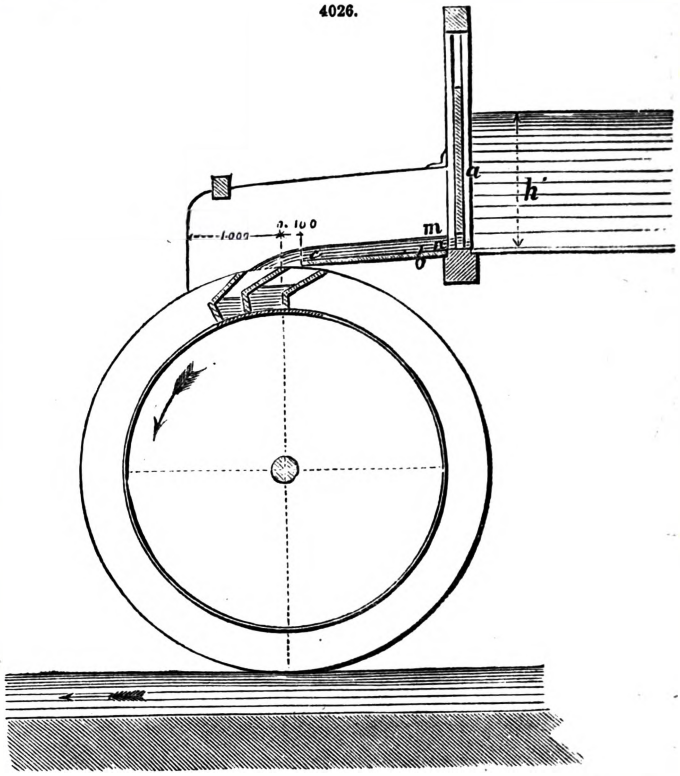

In this system of wheel, as in the preceding, the linear velocity measured on the outer circumference of the wheel should be about equal to that with which the water flows upon the wheel.

Wheels with a head of water may receive 120 litres and even more to the mètre of breadth a second. Their effective work is a little less than that of wheels without a head of water, and may be reckoned, as a mean, 0·75.

When the level of the lower mill-race varies a little (from 0ᵐ·10 to 0ᵐ·15 at the most), and the level of the upper race and the volume of water vary greatly, the most suitable kind of wheel is that represented in a general way by Fig. 4027. The upper mill-race terminates in a cast-iron pen-trough *a*, the inclined front of which is provided with a number of ajutages *b*, *b*, *b*. These may be opened or shut by two rectangular sluices *c*, *c*, each worked by its own mechanism. The buckets have the form shown in the figure, and the sole is provided with ventilators. One or more of the orifices is opened, according to the volume of water to be expended, and the position of the level in the

4027.

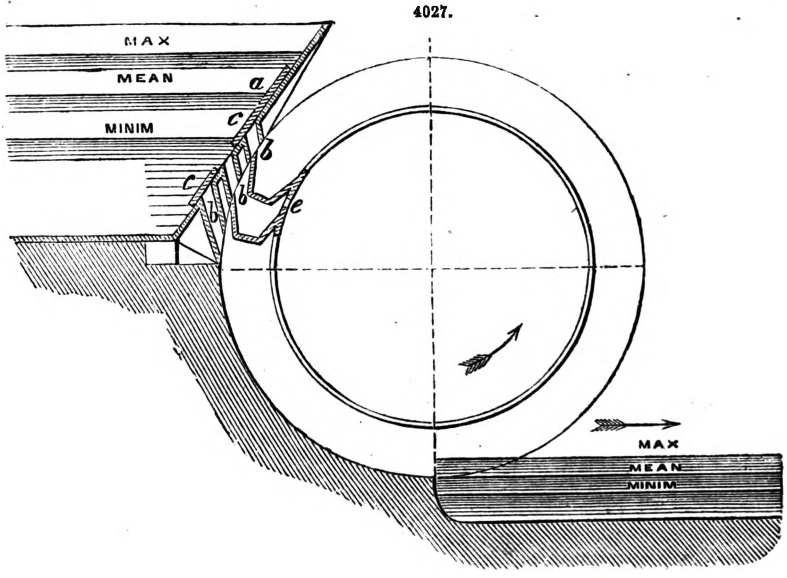

upper mill-race. The water is applied to this wheel at a point situate between the summit and the centre; it is known as the *Wesserling* wheel, because the most remarkable specimen of this kind is to be found at Wesserling, on the Rhine.

The diameter of these wheels is usually determined by taking it equal to the height of the

fall increased by 1 mètre. There is nothing absolute about this rule; it is subordinate to the condition of obtaining on the ready introduction of water into the wheel, and a convenient form for the buckets. As this wheel moves in the direction of the water in the lower race, it may be submerged to a certain degree, $0^m \cdot 10$ to $0^m \cdot 12$. It may receive 240 litres a second to the mètre of breadth, and its effective work is from 0·65 to 0·72.

The shaft of a bucket-wheel may be of wrought iron, cast iron, or wood; the arms may be of the same materials, but they are usually fixed in cast-iron sockets bolted to the shaft. When the buckets are of plate iron, they are usually curved according to a cylindrical surface.

Figs. 4028 to 4035 represent a trough-bucket wheel constructed wholly of iron. The diameter of this wheel is 10 mètres, and its breadth 1 mètre; it weighs, including its shaft and gearing, about 18,000 kilogrammes. The wheel, which is fixed upon a cast-iron shaft, carries 120 buckets of plate iron; the arms are of I iron. Against one of its shroudings, and firmly bolted to the arms, is a toothed wheel, composed of twelve segments. A bracing of oblique wrought-iron ties prevents the transverse warping of the wheel. The shrouding and the buckets are of plate iron; these buckets are riveted to the shrouding by means of angle-iron.

Breast-wheels.—Under this name are included those wheels which are enclosed in a circular breast or arc, and which receive the water at a point situate between their centre and their lowest part.

Let us denote by H the whole fall made use of by the wheel, that is, the difference of the height of the levels in the upper and lower mill-race; by h the fall utilized by the wheel, that is, the height of the point at which the water is applied to the wheel above the level of the lower race; by V the velocity of the water on its arrival upon the wheel; by v the velocity of a point of the periphery of the wheel; and by P the weight of the volume of water expended a second. Theory readily leads to the expression of the useful effect or work T of the wheel as a function of these quantities. We have

$$T = P h + \frac{P}{g} (V \cos. V v - v) v ; \qquad [3]$$

so that the fall utilized by the wheel is expressed by $h + \frac{v}{g} (V \cos. V v - v)$, and its duty

$K = \frac{h + \frac{v}{g} (V \cos. V v - v)}{H}$, of which the maximum is $v = \frac{V \cos. V v}{2}$.

4028.

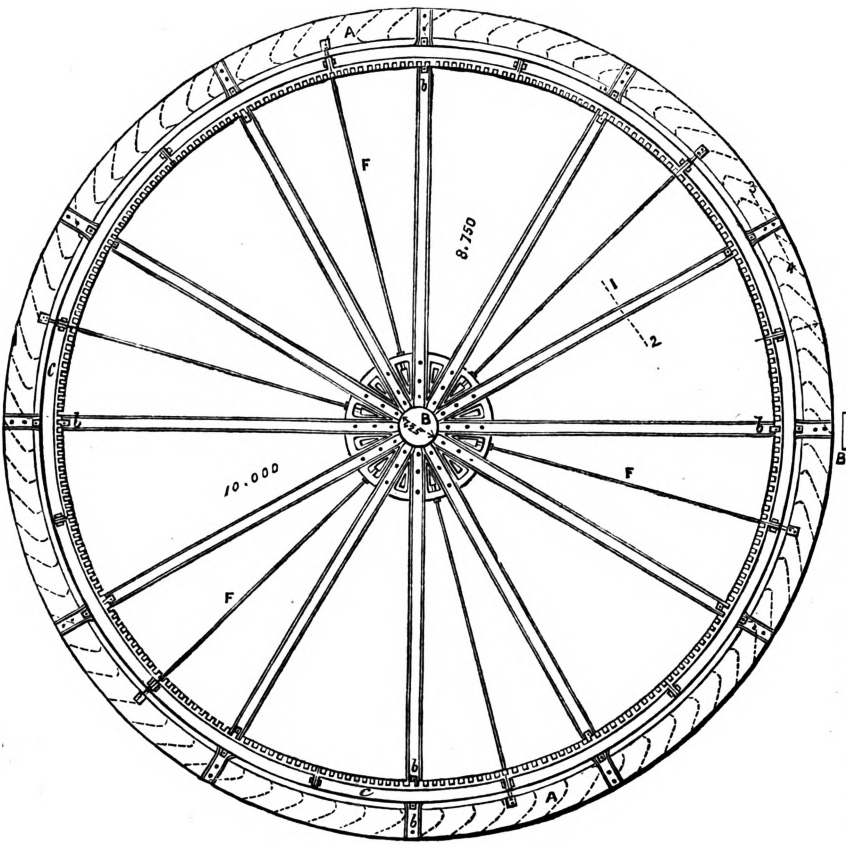

4029.

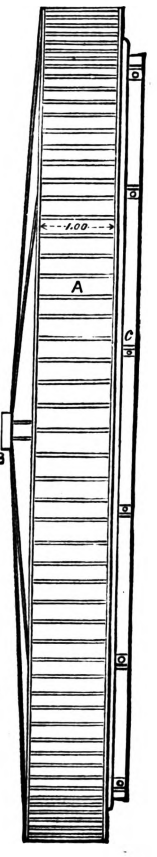

4030.

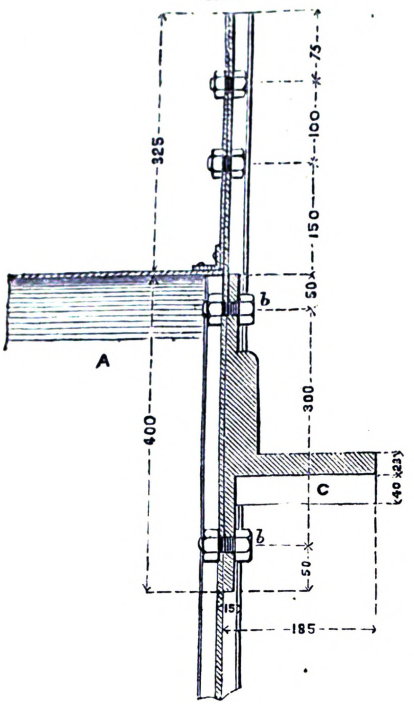

4031.

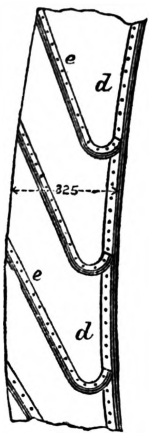

4032.

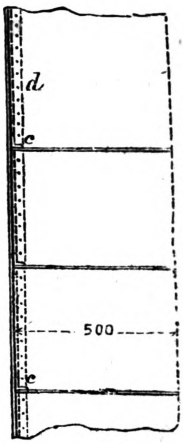

4033.

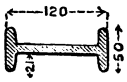

4034.

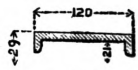

4035.

The duty increases as V decreases, that is, the height of the portion of the fall taken as the generating weight of the velocity must be reduced as much as possible. Hence we have, for breast-wheels, the first arrangement, which consists in supplying the wheel by means of a sluice that allows the water to flow upon the wheel from an overfall. This first class of breast-wheels are called *slow* wheels.

But this condition of flowing from a weir or overfall is often incompatible, either with the volume of water to be expended, or with the variations of level in the upper mill-race; hence the necessity of a sluice allowing the water to flow beneath it, that is, with a head of water. In this case the velocity V, and consequently that *v* of the wheel, are greater than in the preceding case. We thus obtain what are known as *mixed* or *impulse* breast-wheels.

4036.

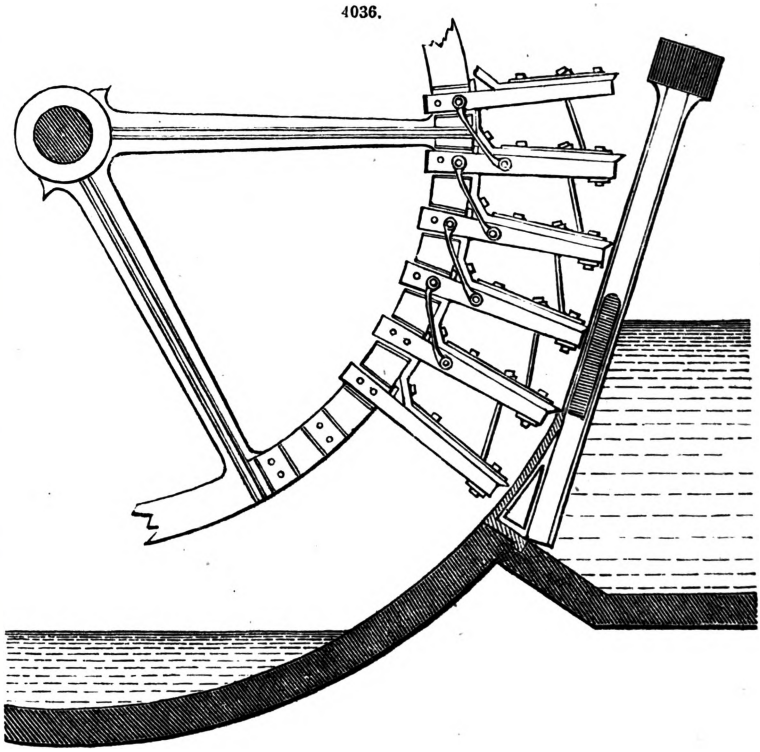

Fig. 4036 represents in elevation a *slow* with straight floats, built by the Messrs. Féray and Co. of Essonne (France). The driving sluice is inclined so as to be placed as near as possible to the wheel. This sluice slides between two cast-iron supports fixed in the side walls, and rests against a fixed cast-iron apron called a *col-de-cygne*, to which a circular stone arc, covered with a layer of cement, forms a continuation; this arc must be constructed with care, so that the play to be left between the wheel and the arc may be reduced to within a few millimètres.

The thickness of the sheet of water received by a slow wheel from an overfall, should be at the most $0^m \cdot 35$ to $0^m \cdot 40$; with respect to the percentage of work and the ready introduction of the water into the wheel, the best thickness is $0^m \cdot 25$. The upper edge of the sluice should be rounded on the side of the water; often the sluice is provided on this side with a strip of sheet iron curved from left to right to guide the lower fillets before they reach the sluice, and consequently lessen the contraction.

Instead of satisfying the relation $v = \frac{V \cos . V}{2}$, most builders fulfil the condition $v = V \cos . V$, which is less favourable with respect to the percentage of work, but which allows of the floats being fixed in the direction of the radii of the wheel; this arrangement of straight floats simplifies the construction of wheels.

To utilize, in part at least, the relative velocity of the water upon the floats, each straight float is continued by a counter-float inclined upon the float and the sole-plate. Between two consecutive floats is a ventilating aperture in the sole-plate to enable the water to enter readily.

An absolute condition from a theoretical point of view, which every breast-wheel must satisfy, is to be immersed in the water of the tail-race by a quantity exactly equal to the height occupied by the water in the floats that have reached the line perpendicular to the axis of the wheel. If the wheel does not dip deeply enough, there is a loss of fall equal to the half of this quantity; if the wheel dips too deeply, it meets in the water of the tail-race with a resistance which is equivalent to a loss of fall. Great care is therefore necessary in all cases to fix the position of the wheel in accordance with the variations of the volume which it is to expend, and the level of the water in the tail-race.

A Belgian millwright, M. Delnest of Mons, exhibited in the Paris Exhibition of 1867, a small model of a wheel of his own invention, called a *helicoidal-float wheel*. Fig. 4037 is a kind of perspective of this wheel. The shaft, centre boss, and arms, possess no peculiarity: the sole-plate is continuous and is not provided with ventilators. According to M. Delnest, the air issues naturally in virtue of the form of the floats, which, instead of being placed according to the generatrices of the cylinder of the shrouding, are formed of two parts inclined in opposite directions upon these generatrices. The form of the floats certainly causes no perturbations in the inflow of water; the absence of ventilators, which M. Delnest seems to have suppressed for the purpose of increasing the capacity of his wheel with respect to that of a common breast-wheel of the same dimensions, prevents the floats from discharging their water readily. The inclination of the floats upon the generatrices of the sole-plate throws the tail-water against the sides of the mill-race, which it tends to wear away. We think therefore that this kind of wheel is destined to remain in its condition of a model, its duty being necessarily inferior to that of a good breast-wheel with straight floats, erected conformably to theory, and to arrangements sanctioned by long experience.

4037.

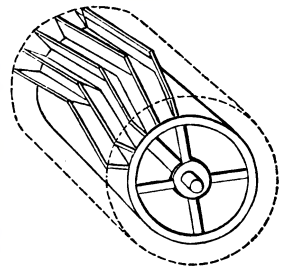

A M. Sagebien, who is an engineer at Amiens, taking into consideration the fact that, from a theoretical point of view, the two causes of a loss of work in a water-wheel are the loss of *vis viva* corresponding to the relative velocity of the water in the floats and the loss of *vis viva* due to the velocity with which the water leaves the wheel, was induced to consider a system of wheel in which the water flows upon the wheel with a very feeble velocity, little above that which it possesses in the mill-lead; so that the sheet of water which flows upon the wheel is of a thickness nearly equal to the depth of the water in the lead. The wheel itself moves very slowly; the velocity of a point in its periphery is usually between $0^m \cdot 60$ and $0^m \cdot 70$ a second (see Fig. 4038). The water does not *fall* upon the wheel as in the case of breast-wheels; it moves horizontally, and the float-boards of Sagebien's wheel must fill themselves in the manner of a pipe open at both ends when dipped slowly into the water. This kind of wheel is therefore something of a water-meter.

4038.

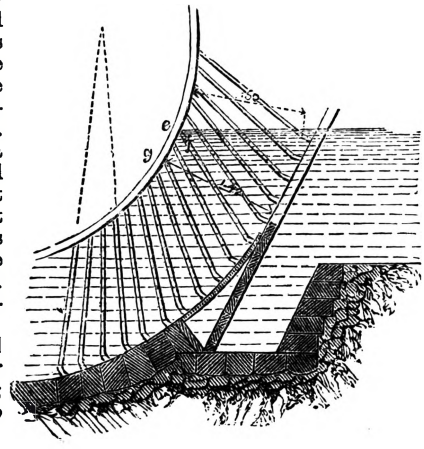

The theoretical conditions which Sagebien's wheel must fulfil, require the floats to have a direction very different from that adopted in common breast-wheels; these floats, as shown in Fig. 4038, are all tangent to a circumference concentric with the wheel.

The driving sluice is opened by being lowered; a little above this sluice there is a trench to catch the stones brought down by the water. It must be remarked here that the extremity or first element of the float-boards has the direction of the radius; this arrangement, contrary to the principles upon which this kind of wheel rests, is designed to prevent the floats being broken in the event of any hard body getting between them and the floor of the race.

Fig. 4039, one of Sagebien's wheels constructed wholly of iron, with the exception of the floats, which are of wood. The low velocity possessed by this wheel requires a very large diameter (8 to 10 mètres, and even more) and very deep floats. This wheel makes from 1 to $1\frac{1}{2}$ revolutions

a minute. We see from Fig. 4039 that the driving shaft of the mill makes about $1{\cdot}5 \times \frac{104 \text{ teeth}}{30} \times \frac{144}{36} \times \frac{160}{40} = 83$ revolutions a minute, in round numbers. It will be seen that Sagebien's wheel requires great complication in the transmission of the movement. In Fig. 4039 the shaft and centre bosses are of iron, the arms of I iron, the shroudings of plate iron, and the supports of angle-iron riveted upon the shroudings.

4039.

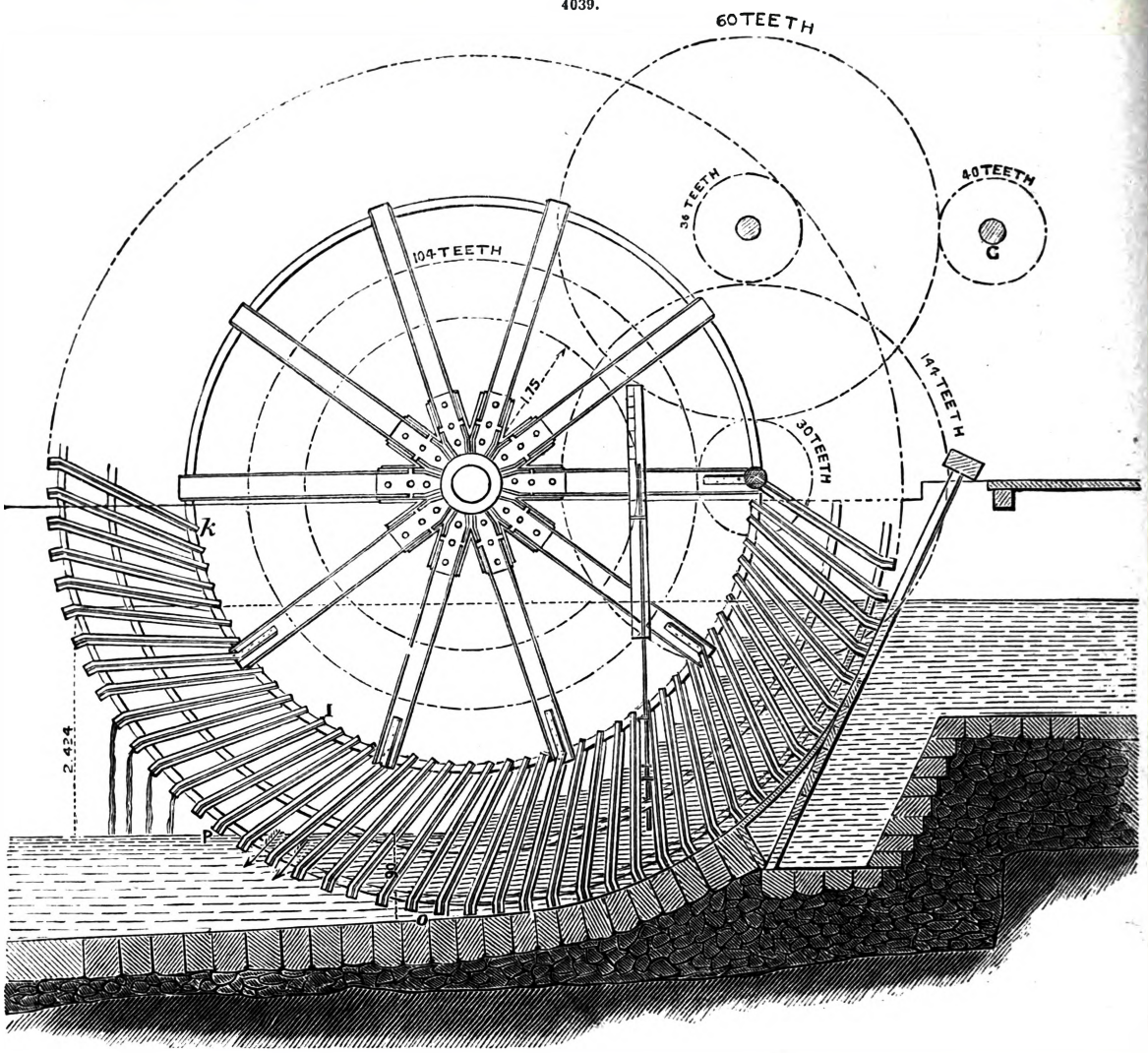

The great diameter required by this system is necessary to avoid too great a resistance offered by the tail-water to the discharge of the water in the floats.

M. Sagebien, in order to study the action of the water in his wheel, put the course in communication with a small reservoir, in which he placed a float with a vertical stem. By doing this in several parts of the course in succession, he was enabled to ascertain that the quantity of water enclosed between two consecutive float-boards varies proportionally to the velocity of the wheel; so that, abstracting the quantity lost through the play of the wheel, the volume of water expended by the wheel in a given time is equal to the volume generated by a float in the same time. In this, however, Sagebien's wheel differs in no wise from a common breast-wheel.

M. Sagebien exhibited in the 1867 Exhibition three plans of his system of wheel, which he calls the *siphon-wheel*, or "wheel with immersed floats and a constant level." Fig. 4040 represents roughly one of the three types exhibited. It applies to a wheel of a very large diameter (10 to 12 mètres), the floats of which dip at least 2 mètres in the tail-water. Such a wheel may receive at least 1000 litres a second to the mètre of breadth. We ought to remark here that the water expended by a Sagebien wheel cannot be calculated by applying to the sluice-gate the formula relative to weirs; for the calculation thus made would give a discharge much greater than the true one.

As this wheel turns very slowly, it will be seen that the play which must necessarily exist between the floats and the course has a very sensible influence upon the volume of water expended, which is consequently greater than the capacity of the float-boards. These float-boards are very close together and very numerous. The low velocity of this kind of wheel gives occasion to considerable strain upon the floats and upon the teeth of the gearing which transmits immediately the motion from the wheel.

4040.

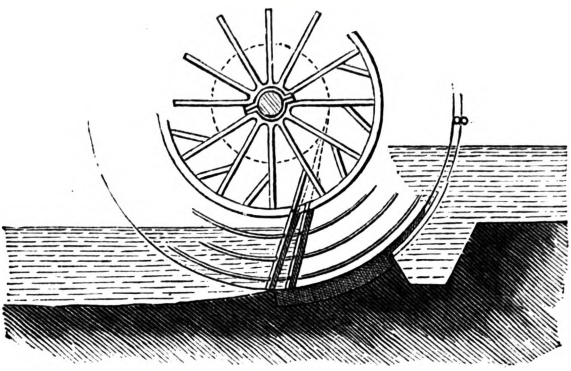

In Fig. 4040 the shaft is of iron; upon this shaft are fixed several cast-iron centre bosses in two pieces, each half of which holds six arms. The twelve arms of each centre boss are fixed to a shrouding of plate iron, upon which the supports are riveted; these supports are simply angle-irons, to which the wooden floats are bolted. They are bound together by three iron bands. The sluice-gate, instead of being straight, is curved concentrically with the wheel. This arrangement is good in principle, because it enables the sluice-gate to be placed quite close to the wheel; but it is very difficult to get a curved sluice of so great a size to work well.

Fig. 4041 represents a wheel of the same kind, but of smaller dimensions. The mode of construction is that first adopted by M. Sagebien; it consists of cast-iron centre boss in one piece, in which the arms of I iron are set. The supports are of angle-iron, and they are riveted upon the

4041.

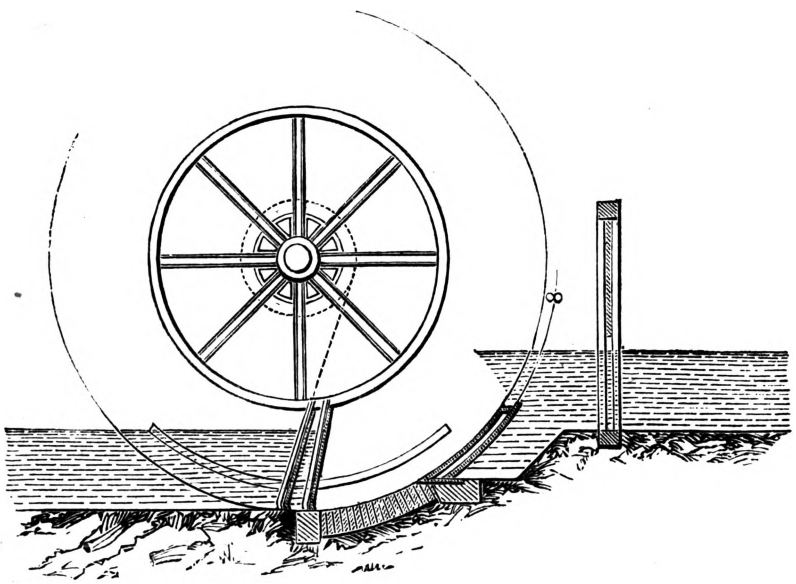

shroudings, which are of plate iron; the supports are bound together by an iron band. We prefer the construction of Fig. 4040, as being more simple; this is its only merit, for rigidity not being the dominant quality of such large wheels, their greater number of parts increases the danger of *dislocations*.

4042.

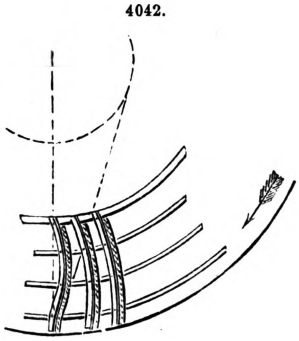

A little above the sluice-gate, which is curved, Fig. 4041, and concentric with the wheel, is a *guard-sluice*, which is always open, except when repairs are needed in the driving sluice. The arrangement of the pit at the back of the sluice-gate is bad, for the stones which accumulate in it are likely to interfere with the descent of the gate; the arrangement in Fig. 4040 is far preferable.

The third type exhibited, Fig. 4042, differs from the other two only in the form of the float-boards, which are curved instead of being straight. It appears to us that no theoretical reason can be seriously given to justify this form; but the difficulty of construction, the danger of breakage in case the end of the floats should touch the course, and the greater facility with which the floats lift the tail-water, each one being a kind of spoon, lead us to condemn, from a theoretical point of view, this form as utterly vicious. We will sum up our opinions of Sagebien's wheels by saying, they are very expensive to build, fix, and keep in repair;

the gearing necessary to transmit the motion costs as much as the wheel itself; it requires a long time to start them; they do not last long unless they are used for mills offering a perfectly regular resistance, and their various parts require to be frequently screwed up, which renders them unfit for mills that work uninterruptedly. M. Sagebien has himself confirmed our opinions as far as the too low velocity of his wheels is concerned, by exhibiting the machinery of the water-works established by him, for the supply of Paris, at Thilbardon, on the Marne. The pumps are worked by one of his wheels; but the velocity of the wheel is so small that it was found necessary to have a special shaft to drive the pumps, revolving about three times faster than that of the wheel, with which it is connected by a pair of spur-gear. The defect which we pointed out has therefore produced another; for gearing should be avoided as much as possible in water-works designed for permanent service, and in which the chance of breakage and consequent stoppage should be reduced as much as possible.

We ought to add to the foregoing that Sagebien's wheel is not suitable to water-courses that vary in level and volume; the variations of level in the tail-race can only be such as to keep this level about the same as that of the water in the floats that have reached the line perpendicular to the axis of the wheel; in other words, the variations of level in the tail-race must be proportional to those of the volume furnished by the stream. If the volume of water is variable, Sagebien's wheel will be too *heavy* when the stream is low, and will *work with difficulty* in times of floods. Besides, circumstances will occur when the level of the tail-race will be higher than the level of the water in the floats that have reached the line perpendicular to the axis of the wheel, Fig. 4043; hence a considerable resistance from the tail-water, and a consequent loss of work.

4043.

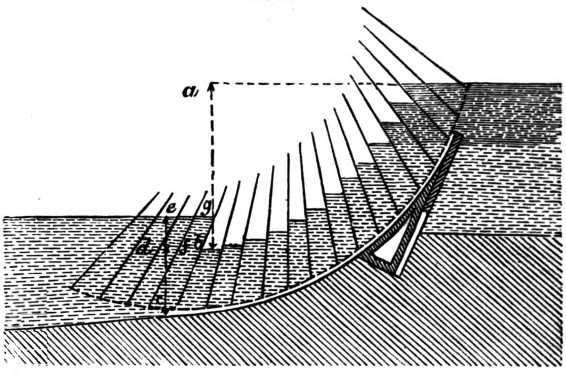

Undershot Wheels. — In undershot wheels the water arrives upon the floats with a velocity due to a head of water nearly equal to the height of the fall. When the floats are straight and radiate from the centre, the wheel is most imperfect, and its theoretical duty cannot exceed 50 per cent.; so that the practical duty does not exceed 35 or 40 per cent. of the gross work; and even to obtain this result, the wheel must be enclosed, on its lower portion, in a circular course equal in extent to the space of three consecutive floats, in order that there may not be in any case *direct* communication between the upper and lower races; care must be taken also to incline the sluice-gate from the wheel, and to place it as near to the latter as possible.

The duty of these undershot wheels with straight floats may be improved by utilizing the velocity possessed by the water on leaving them. This is effected by making the floor of the course, immediately beyond the plumb-line of the wheel, a little lower than the natural level; in this way 0·35 or 0·45, or the real height of fall, may be gained. The way of doing this is to give, for a distance of 2 mètres, an inclination to that portion of the race which immediately follows the circular course sufficient to enable the water to flow over it with a velocity equal to that of the wheel; from this part the race slopes about $\frac{1}{15}$ down to the natural bed of the stream.

The depth of the floats should be equal to at least three times the opening of the sluice-gate; but this rule is not always sufficient; it is better to lay down the condition that the depth of the floats must be such as to keep them above the highest level of the tail-water.

General Poncelet has made float-wheels the object of his special study, for the purpose of ascertaining the best arrangement for utilizing the impulsive force of the water. The result of his researches was the construction of an undershot wheel in which the floats are curved, so that their first element upon the periphery of the wheel has the direction of the relative velocity of the water with respect to the wheel. The consequence of this arrangement is that the water enters the wheel without shock, and ascends in it to a height nearly equal to that due to its relative velocity; the water then escapes from the wheel with an absolute velocity that may be much below that of the wheel, if the form of the floats has been properly studied. In order that the fluid veins of the sheet of water which arrives upon the wheel may all be placed in the same theoretical conditions, regard being had to the form adopted for the floats, M. Poncelet establishes between the sluice-gate and the bottom of the wheel a curved course, the longitudinal profile of which is an arc of an involute of a circle.

The Paris Exhibition of 1867 contained no remarkable specimens of undershot wheels with straight floats, nor of Poncelet's wheel. Figs. 4044 to 4052 represent one of these latter, wholly of iron, which has been erected at the manufactory of Guérigny (France). The shaft of this wheel is of iron; upon this shaft are fixed three cast-iron centre bosses, in each of which are set eight flat iron arms firmly bolted to it. These arms are riveted to segments of the plate-iron shroudings held together by riveted joint-plates. The floats are of sheet iron, and have been curved upon a model; they are fixed upon angle-iron curved upon the same model, and riveted to the shroudings. Each set of arms are broad in the middle, with flat iron braces bolted to the arms; and the three shroudings are held by round tie-bars. This mode of construction is at once light and strong. The duty of Poncelet's wheels varies from 0·50 to 0·65.

In terminating our review of common water-wheels we ought to call attention to the float-wheels of M. Colladon, a Swiss engineer. These are wheels with straight floats, and are designed to utilize the power of streams very variable in level, and offering only a very low fall. These

wheels utilize the impulsive force of the water, and to prevent their being submerged in flood time, M. Colladon places their axes upon movable supports, which renders them capable of being raised or lowered at pleasure. It is a very primitive kind of wheel, having a duty inferior to that of common

4044.

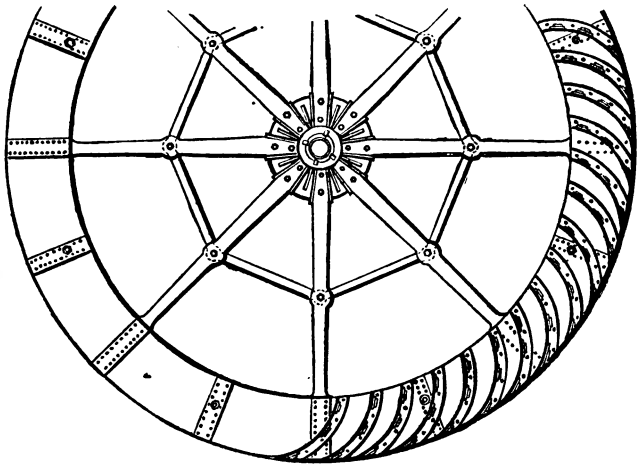

4045.

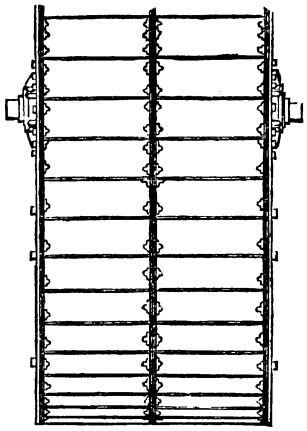

4046.

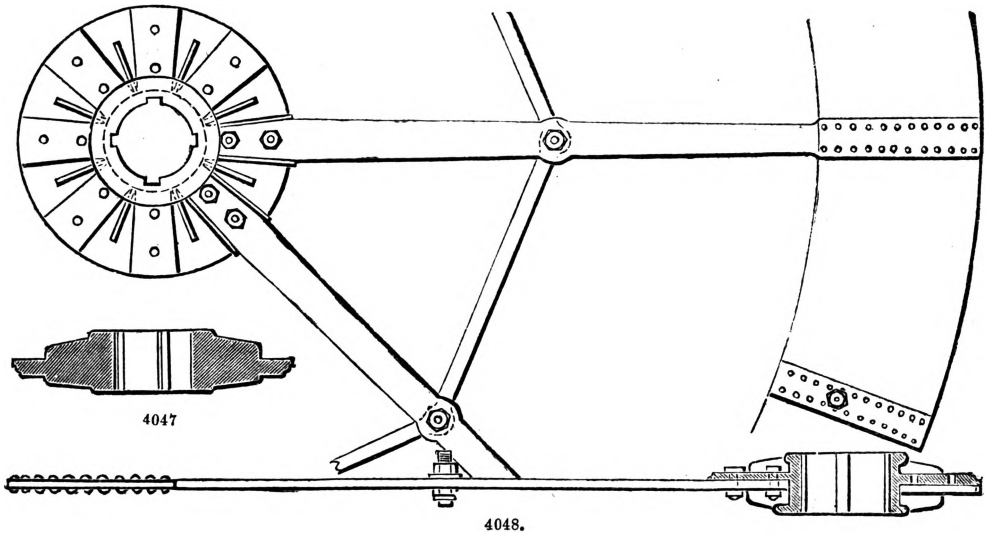

4047

4048.

4049.

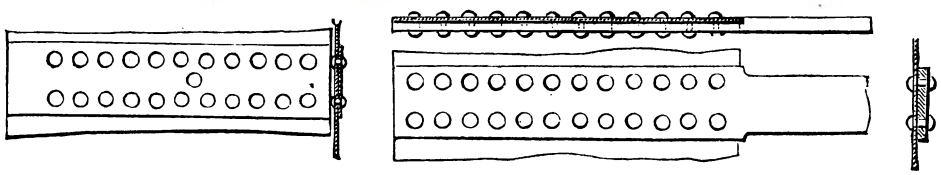

4050.

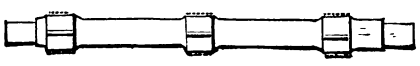

4051.

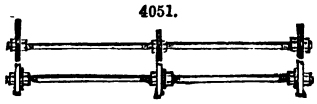

4052.

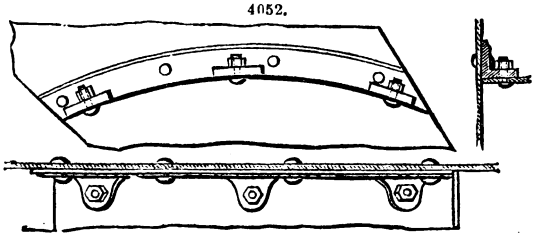

undershot wheels with straight floats, when well established. It is not suitable for wheels of great power, on account of the complication which is the consequence of the movability of the axis and the little rigidity which results from it.

Turbines.—Under the name of turbines are included those kinds of wheels which are constructed to utilize the *vis viva* possessed by the water in virtue of the velocity with which it arrives upon the wheel, this velocity being due to a height sensibly equal to that of the fall. The water is brought upon the buckets or blades of the turning portion of the wheel, or turbine proper, by channels distributed over the whole, or sometimes over a portion only of the circumference of the turbine; these with their various parts constitute the fixed part of the wheel, sometimes called the distributor.

Turbines may be erected upon either vertical or horizontal shafts. There are two classes of turbines with a vertical shaft. In those of the first class the water arrives horizontally upon the blades of the revolving part of the wheel through the interior of the latter, and issues horizontally, thus flowing away from the axis. This is Fourneyron's system. The revolving blades form thus a series of vertical cylindrical channels included between two horizontal walls. In those of the second class, called Euler's turbines, the water enters the wheel from above and issues from below, remaining thus at a constant distance from the axis.

Fourneyron's System of Turbines.—We will not stop to examine here the theoretical considerations involved in the conception of this kind of turbine; these considerations have been fully developed in another place. We will confine ourselves to giving a description of a turbine of this system, represented by Fig. 4053.

4053.

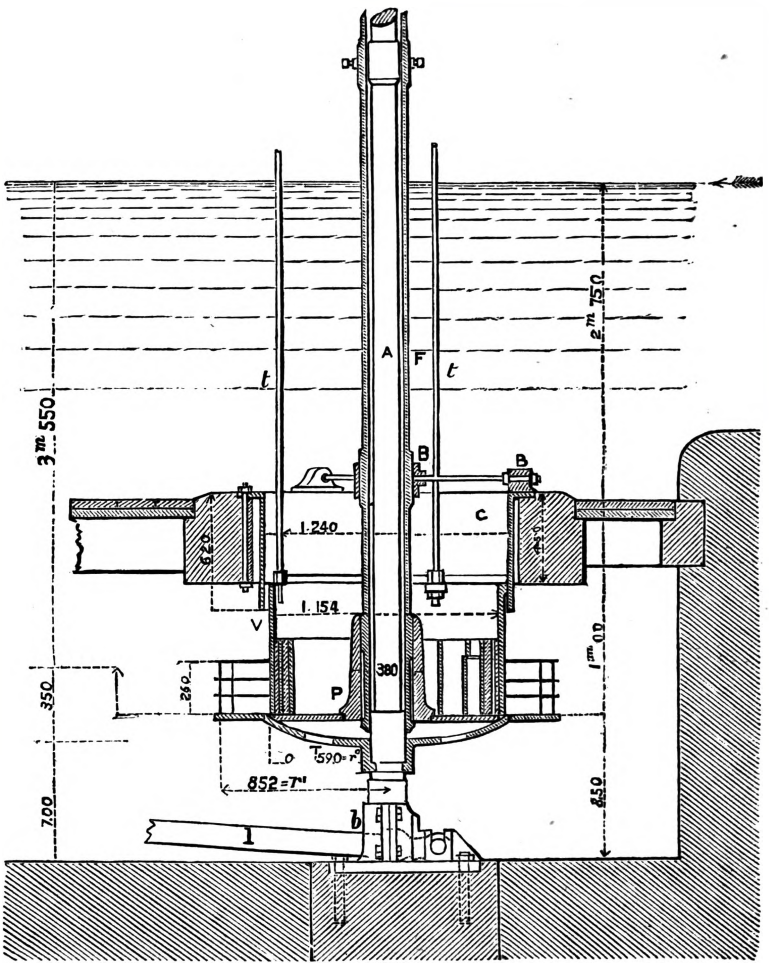

The turning portion, or turbine proper T, is erected upon a vertical iron shaft A, the lower end of which terminates in a pivot working in a socket *b*. This socket is bolted to a strong, hard stone built into the lower mill-race. A lever *l*, to which is attached an iron rod, regulates the height of the shaft, so as to remedy the wearing away of the pivot and keep the turning part of the wheel always in the same position. The vertical shaft A turns in a kind of sheath F of cast iron, bearing on its lower part the fixed portion of the wheel, or distributor P, which is furnished in its centre with a very elongated nave bored and fitted upon the sheath. This sheath F is centred and held in its position by a cast-iron collar B and three wrought-iron braces fixed as shown in the figure. The cylinder *c* serves as a guide to an inner cast-iron cylinder V, which constitutes the sluice of the turbine, and which is raised or lowered by sliding between moving and the fixed portions of the wheel. This sluice is worked by means of three vertical rods *t*, working into female screws

commanded by a single piece of mechanism to ensure an equal motion of the rods. The cylinder C is bolted upon the wooden floor of the water-chamber of the turbine. The fixed part P is provided with directing blades which run from the outer circumference; half of these blades reach the centre or nave, and half stop short at the mean circumference. Their use is to direct the water into the revolving part of the wheel.

One grave defect of this kind of turbine is the facility with which plants and leaves accumulate among the fixed blades; for this reason it is necessary to place a thick screen in some part above the wheel.

Theoretically this turbine should work beneath the tail-water to avoid a loss of fall; but practically it can be submerged only by a quantity equal to the lift of the sluice. If the turbine be placed out of the tail-water, and the sluice lifted to its full height, this turbine will be placed in its normal conditions with respect to the mode of action of the water; a pressure will be established in the channels of the moving part of the wheel, and the turbine will be revolved by reaction. If, on the contrary, the sluice be only partially lifted, the mode of action of the water may be changed; the veins of water, on leaving the fixed blades, enter the channels formed by the revolving blades, the capacity of which is, in that case, too great, and disturbances are produced which cause a decrease in the duty or percentage of work of the wheel.

Some experiments made with Fourneyron's turbine at a factory at Inval (France), with a low fall, and turning under water, gave the following results;—

Lift of the sluice	0m·091	0m·145	0m 200	0m·300	0m·345
Percentage of work	0·49	0·58	0·67	0·69	0·71

From which it will be seen that the percentage of work diminishes with the lift of the sluice.

M. Fourneyron, to remove this very grave defect, divided the height of the moving portion of the wheel into three compartments (Fig. 4053), separated by horizontal partitions; but these partitions correspond to only three lifts of the sluice, and therefore remove the defect for only three particular positions of the sluice. It is a very imperfect remedy.

Among this class of turbines we must mention those of the Messrs. Williamson, of Kendal, in which the water is let into the wheel from without. Theoretically this arrangement possesses no advantage; it renders the construction of the turbine more complicated, and ought to be rejected, as well as Fourneyron's turbine itself, because it requires a volume of water and a velocity of rotation absolutely constant, conditions that can rarely be satisfied in practice.

When the fall is high, the turbine cannot in general be erected in water-chambers constructed of stone and wood, because the expense would be too great. In such a case the turbine is erected in a cast-iron tank fed by a conduit pipe from the upper mill-race. The height of the water in the upper race above the orifices of the revolving wheel must be sufficient to prevent the formation of hollows over these orifices; 1 mètre may be considered as a minimum. It is moreover necessary, for the free discharge of the water, to give a sufficient depth to the lower race beneath the wheel, to keep the mean velocity of the water there below 0m·60 or thereabout. These conditions cannot always be satisfied with a turbine and an open water-chamber if the fall is rather a great one, the construction of the lower race in these cases being very expensive. This labour is considerably lessened by means of a very simple contrivance, invented and often applied by M. Girard, a French engineer.

Fig. 4054, to which we will return later, represents the application of this arrangement to one

4054.

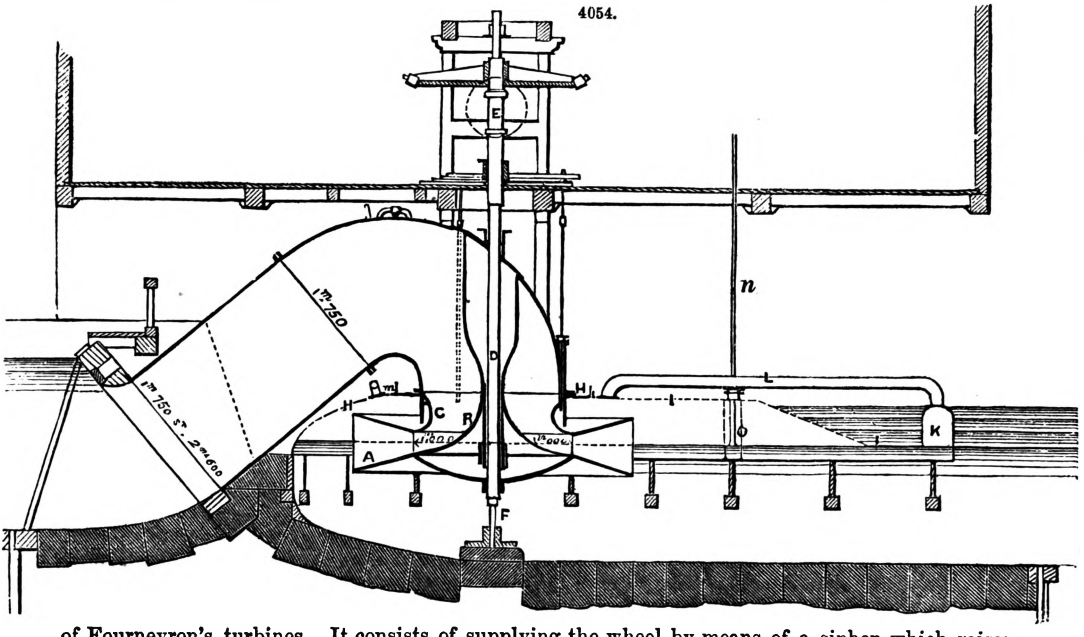

of Fourneyron's turbines. It consists of supplying the wheel by means of a siphon which raises the water to a level above that of the upper race, so that the revolving wheel may be placed up to

the lower level, and the formation of hollows is wholly avoided. The form of the siphon is studied with a view to guide the water in the most effective way on its arrival upon the revolving wheel, and to utilize consequently the impulsive force corresponding to the velocity which it has in the siphon.

The diametrical section of the turning wheel and the form of the blades have been modified by M. Girard, so that the turbine moves by free deviation, that is, the water flows in the buckets of the revolving wheel as in an open channel, so that the motion of this turbine satisfies as nearly as possible the theory relative to the motion of an isolated vein of water.

The sluice of the turbine represented in Fig. 4054 consists of a cast-iron cylinder, as in Fourneyron's turbine; but the diametrical profile of this cylindrical sluice is much more favourable to a proper guidance of the liquid veins: the water issues from the fixed portion of the wheel through a series of conical ajutages formed by the fixed blades, its inner wall R and that of the cylindrical sluice C. The revolving wheel A is fixed upon the bottom of a hollow cast-iron spindle or shaft D, which passes through the central casing of the tank, and terminates upwards in a kind of ear E, in which are placed the pivot and box. This box is screwed to the upper end of a central fixed shaft F, of wrought iron, passing through the hollow shaft and fixed below in a box or socket bolted to a hard stone set in the lower mill-race. This mode of construction renders the repairing and the greasing of this, the most delicate part of the wheel, very easy.

Fig. 4055 represents the details of the construction of the upper portion of the shaft D.

The pivot F terminates in a screw working into the head H of the hollow shaft, in which it is made to ascend or descend by means of the female screw I.

It often happens that the level of the lower race is variable; indeed this is the usual case. In such circumstances the turbine is placed with its lower side down to the lowest level, consequently in flood time the turbine is under water. This immersion of the revolving wheel is a favourable circumstance for Fourneyron's turbine when the sluice is wholly raised; but it is no longer favourable when circumstances do not admit of a complete raising of the sluice. And this case often occurs, because the capacity of the turbine is calculated with a view to obtain, even with a minimum fall, the power requisite for the mill. In such conditions the buckets of the revolving wheel are partially filled with the back-water, which is relatively at rest; the result is a shock and a consequent loss of work. To remove this grave defect, common to all systems of turbines, and to maintain sensibly constant the percentage of useful work in the conditions to which we have referred, M. Girard has invented a method of keeping the wheel free of water by means of compressed air driven under the revolving wheel by a small blowing machine driven by the turbine itself.

This very important improvement is shown in Fig. 4054, as having been applied to one of Fourneyron's turbines modified by M. Girard. The moving portion of the wheel is enclosed in a cast-iron cover H, perfectly air-tight, into which opens the pipe *m*, through which the compressed air is injected. The cover H runs down (I) to a reservoir of air K, in which the air collects, which is carried along mechanically by the water as it escapes from the turbine. A vertical tube *n*, terminating in a kind of reversed funnel *o*, serves to let off the superfluous air. The position of the lower edge of the funnel determines that of the *artificial* level of the water produced beneath the turbine by the injection of the air, so that the revolving wheel works in the air whatever the position of the level of the race may be. We shall see later what the advantage of this ingenious contrivance is.

Section through *a b*.

4055.

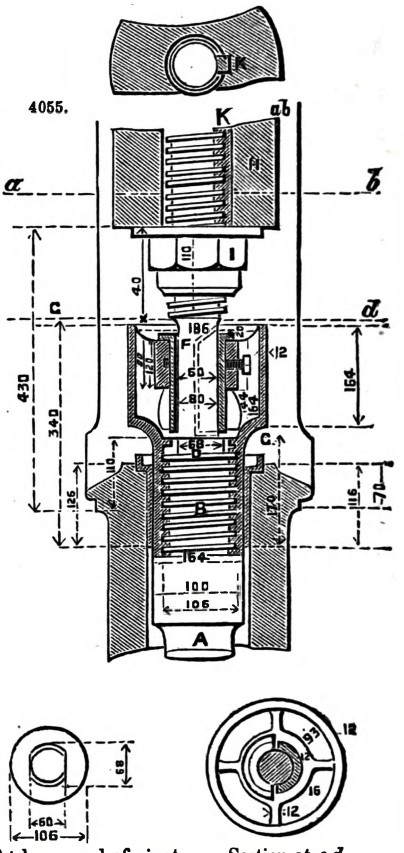

At lower end of pivot.

Section at *c d*.

Euler's Turbine.—In this kind of turbine the water enters from above. To avoid a loss of fall the lower face of the revolving wheel must be down to the lowest level of the back-water. If this level is constant the turbine will be always out of the water. This kind of wheel therefore possesses an incontestable advantage over Fourneyron's, which must work constantly under water in order to fulfil the same condition.

One of the first French constructors to apply Euler's principles to the construction of turbines was M. Fontaine, of Chartres. Figs. 4056 to 4058 represent a turbine erected by him at the mill of Vadenay, with some of its principal details. The adductor channel B opens into a water-chamber formed of two side walls of hydraulic masonry and a wooden framing A, and a vertical partition D, also of wood. The fixed part of the wheel F is bolted upon the framing A; the moving part H is fixed to the lower part of a hollow shaft L, the pivot of which is arranged as in Fig. 4055. The central column or fixed shaft is let into a cast-iron support K bolted to a hard stone set in the lower mill-race. The hollow shaft is enclosed in a cast-iron casing I in two pieces, which rises

a little above the highest level of the top-water. The sluice of the turbine consists of thirty-two small vertical gates V, Figs. 4057, 4058, sliding in grooves in the side cheeks of the fixed portion of the wheel; to each gate is attached an iron rod *t* fixed by two nuts to an iron ring *c*. This ring is suspended upon three or more vertical wrought-iron rods T, terminating upwards in a screw that works into the piece *m* turning in a groove. Each part *m* carries a spur-pinion; all of these pinions gear into a wheel *r*, so that by turning this wheel in either direction the rods T or the ring *c*, and consequently the thirty-two sluice-gates, are raised or lowered. Thus if it be required to reduce the discharge of water to one-third or one-fourth of the total capacity of the turbine, each of the sluices will be raised a third or a fourth of its total height.

4056.

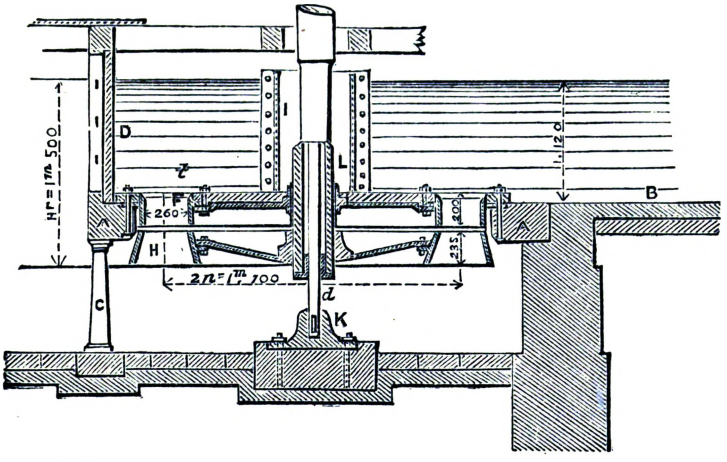

4057.

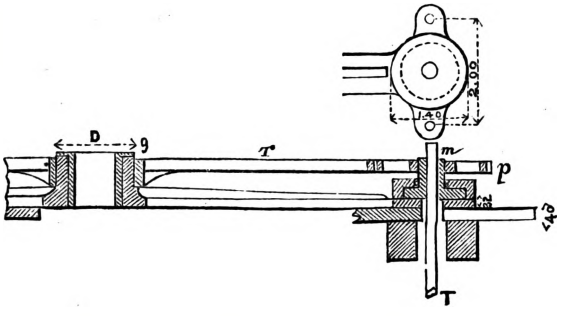

4058.

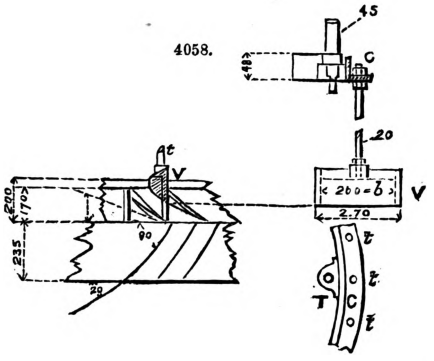

But to keep sensibly constant, notwithstanding the variations of the volume of water expended, the percentage of effective work of a turbine, the orifices of the distributor must, neglecting for the moment all other conditions, be fully opened. To make this clear we will give an example. Suppose that a turbine receiving the water throughout its circumference has to expend, during certain seasons of the year, only the half or a third of the volume of water corresponding to its total capacity. There are two ways of reducing the expenditure of the turbine so as to make it exactly equal to the volume furnished by the stream. The first, employed by M. Fontaine in the turbine which we have just described, consists in proportionately reducing the opening of all the orifices of the distributor. This is a very bad way, and it greatly reduces the percentage of work at the very time when it can least be afforded, namely, when the stream is low. The second way, the best and most rational applications of which we owe to M. Girard, consists in opening only that number of orifices which correspond to the volume to be expended; this is the principle of *partial sluices* applied to turbines. Many examples of the application of this principle were shown in the Paris Exhibition of 1867; but as all of them were very objectionable from some point of view, we will not attempt to describe them here. The Exhibition did not, indeed, show the progress which has been made during the last few years in the construction of turbines. This progress we will show in our article on TURBINES. To this end it will be necessary here to call attention to a few generalities applicable to all systems of turbines.

The form of the directing blades being given, that of the moving blades is deduced so as to allow the water to enter without shock; to effect this, the first element of the blades must be directed according to the *relative* velocity of the water at its entrance. The ratio of the *absolute* velocity with which the water issues from the orifices of the fixed portion of the wheel, with the linear velocity at the periphery of the wheel, may be taken arbitrarily; the value of this ratio has, however, an influence on the percentage of work.

If the linear velocity of the wheel is nearly equal to that of the water, the wheel is called a *high-pressure* turbine. The choice of this proportion enables us to use a wheel of a relatively small diameter, with a large volume of water. The adoption of a high-pressure turbine is often rendered necessary;—1, by the necessity of expending a large volume of water under a low fall (1 mètre and even less); 2, by the diminished cost of the wheel and the works requisite for its establishment; 3, by the advantage of obtaining a greater velocity in the shaft of the turbine, which usually simplifies much the transmission of the motion. But the percentage of work in wheels of this kind rarely exceeds 0·65. Therefore in most cases, even on rather high falls, it is better to give the

turbine a velocity equal to about half that of the water. This proportion characterizes the wheels known as *low-pressure* turbines, in which the percentage of work may always be considerably greater than that of high-pressure turbines working under the same conditions of fall and volume.

The only important and rational improvements in the construction of turbines on Euler's system are due to M. Girard. Fig. 4059 represents one of Girard's turbines with an open water-chamber, the partial sluicage of which consists of a series of vertical sluices similar to those of Fontaine's turbine explained above; but instead of their being all raised at once, they are raised one after another by means of a kind of rack and pinion communicating with a governor placed above the wheel, Fig. 4059, A B, *b*. This kind of sluice works perfectly, and may be adapted to the action of an automatic regulator.

4059.

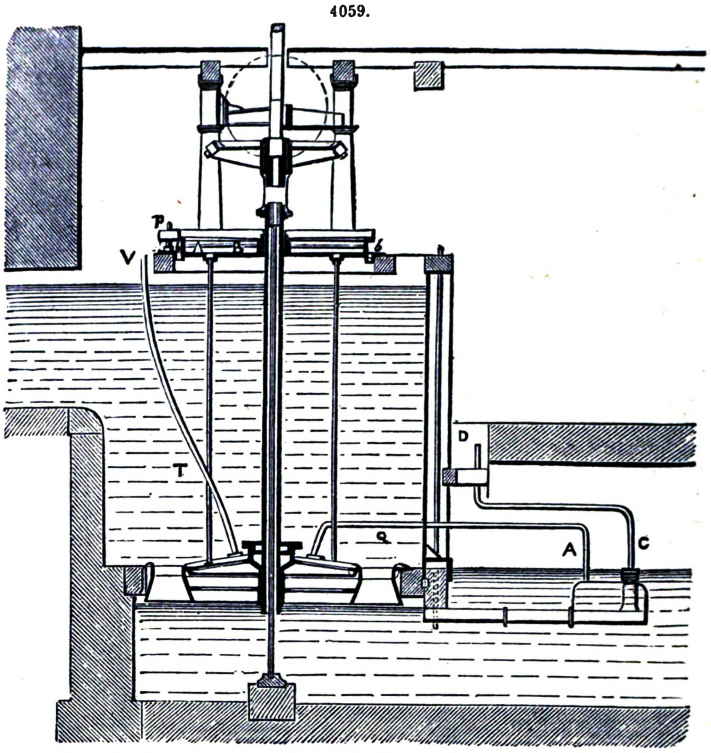

The objection to which we called attention in the case of Fourneyron's turbine when the level of the backwater is variable, exists also in those of Euler's system. M. Girard, however, removes this objection by clearing the wheel of water by means of compressed air in the manner we have before described. Fig. 4059 shows the arrangement of the hydropneumatic apparatus of M. Girard applied to a turbine with an open water-chamber. Numerous experiments have been made to test its value. Some of these we give in the following Table, compiled from M. Girard's works on the subject.

EXPERIMENTS MADE WITH THREE OF GIRARD'S LOW-PRESSURE TURBINES, WITH PARTIAL AND INDEPENDENT SLUICES, AND WORKING OUT OF THE WATER.

Description of the Wheel.	Fall.	Number of Sluices open.	Percentage of useful effect to the gross work.		Advantage of working with compressed air.
			Working out of the water.	Working under water.	
Paper Mill at Egreville (Seine-et-Marne).					
$2r = 2^m{\cdot}48$ { 40 fixed curves .. / 40 moving curves ($h' = 0{\cdot}30$) .. } T^u = 30 horse-power under a minimum fall of 1 mètre ..	1·79	10 (out of 40) 0·25	0·70 to 0·75	0·58 to 0·68	$\frac{0{\cdot}70 - 0{\cdot}58}{0{\cdot}58} = 0{\cdot}21$
	1·63	16 „ 0·40			
	1·60	20 „ 0·50			
Persian India-rubber Factory (Seine-et-Oise).					
$2r = 1{\cdot}70$ { 80 fixed curves .. / 54 moving curves ($h' = 0{\cdot}20$) .. }	2·710	24 (out of 80) 0·30	0·78 to 0·80	N.B.—The turbine is cleared of water naturally.	
	2·660	32 „ 0·40			
	2·535	36 0·45			
Spinning Mill of Amilly (Loiret).					
$2r = 3{\cdot}600$ .. .. / 80 fixed curves .. .. / 60 moving curves ($h' = 0{\cdot}36$) ..	1·80	14 (out of 80) 0·17	0·69		
		18 „ 0·22	0·71		
		24 „ 0·30	0·73		
		30 „ 0·375	0·77		
		36 „ 0·45	0·78		
		48 „ 0·60	0·80		
		48 „ 0·60	..	0·70	$\frac{0{\cdot}80 - 0{\cdot}70}{0{\cdot}70} = 0{\cdot}14$

Fig. 4060 represents the diametrical vertical section of a turbine with an open water-chamber on Girard's system, in which the water is admitted only upon two opposite quarters of the periphery. The sluice consists of two sectors or valves *a a*, each worked by a special mechanism, one of which is shown in the figure. We ought to call attention here to the excellent and strong arrangement of the supports of the vertical shaft of the turbine as well as those of the mill-shaft.

4060.

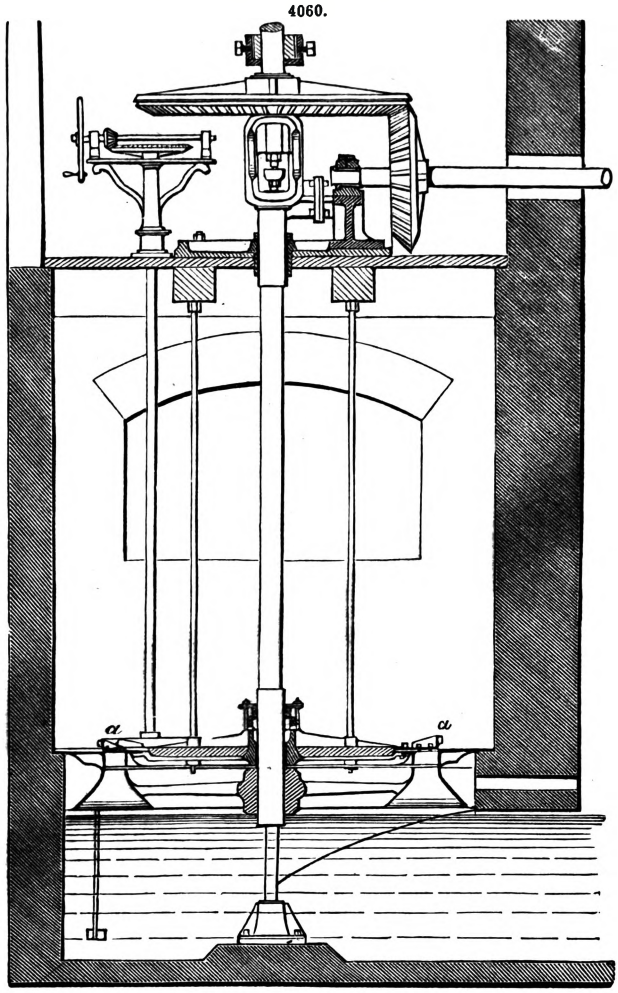

As the two valves work *independently* of each other, only one need be opened in seasons when the water is low; this is favourable to the maintenance of a good percentage of useful effect. It is evident that this turbine which, at most, is fed upon half its circumference, must not work under water. If the level of the backwater is variable, the turbine should be placed so as to utilize the whole fall in seasons of low water; in flood time it is kept clear of water by means of compressed air.

A turbine of this kind is applicable to the case of a very variable, but not large, volume of water (1000 to 1500 litres a second at the most), with a moderate fall, or in the case of very variable volumes with a high fall. In the latter case the turbine is placed in a closed iron tank. Often the great height of the fall is not the only reason for the adoption of a closed tank. Sometimes the conformation of the place where the wheel has to be erected, or some other local reason, leads to the adoption of the iron tank, in which the water is brought by a pipe, in place of the stone and timbered water-chamber.

Fig. 4061 represents a turbine with a close tank on Girard's system, fixed under a low fall: the figure in question shows the arrangements to be given in such a case to the hydro-pneumatic apparatus. The wheel is fed with water throughout its periphery: and the sluice consists of ten or twelve sliding valves moving horizontally. The form of the tank is designed to enable the water to enter readily, and to prevent any loss of force through a sudden change of velocity. The motion of the slide-valves clears away any obstructions that may accumulate. As each valve corresponds to several orifices in the fixed or guiding part of the wheel, and as each valve should be fully opened in order not to reduce the proportion of useful

4061.

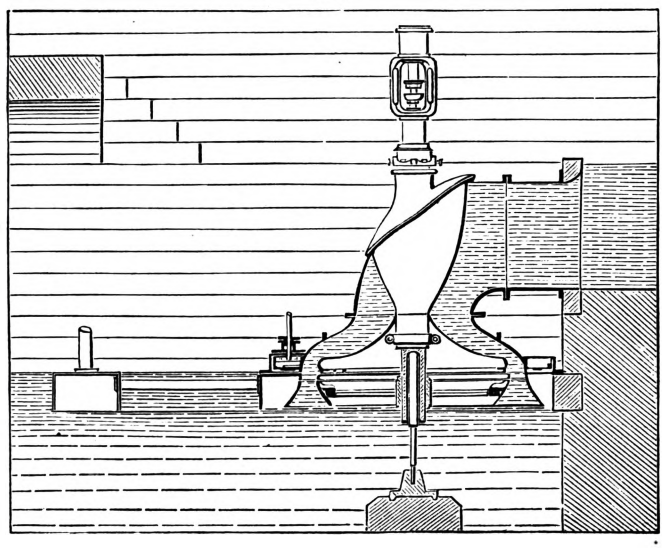

effect of the corresponding orifices, it follows that we cannot by means of this system of sluice reduce the volume of water so gradually as by means of the two independent valves mentioned above. These considerations led M. Girard to combine these two systems of sluices.

Figs. 4062, 4063, represent this arrangement for the case of a turbine with an open water-chamber. The following references will render a description unnecessary;—A, moving portion of the wheel; B, fixed portion; C, fixed column or shaft; D, hollow spindle; E, stuffing box, serving as an axis to the register-valve; K, differential register-valve with one blade covering 0·10 of the circumference; L, spindle commanding the register-valve; P, spindle commanding the toothed cam-sector; Q, toothed cam-sector working the slide-valves; R, V-piece working the slide-valves; S, hollow columns; T, movements of the slide-valves; U, copper guides; V, cast-iron slide-valves.

It will be readily seen that by uniting the slide-valves and the register-valve, we may fully open a number of orifices exactly necessary and sufficient to use only the volume of water furnished by the stream; there is at most but one, the register-valve, whose orifices are only partially covered; but this is unimportant.

When a turbine has to expend a relatively small volume of water under a high fall (5 mètres and above), there is an advantage in supplying it with water upon a portion only of the circumference, because in that case it may have a larger diameter, and consequently revolve a less number of times than if it were supplied throughout its circumference. We may then adopt the sluice

4062.

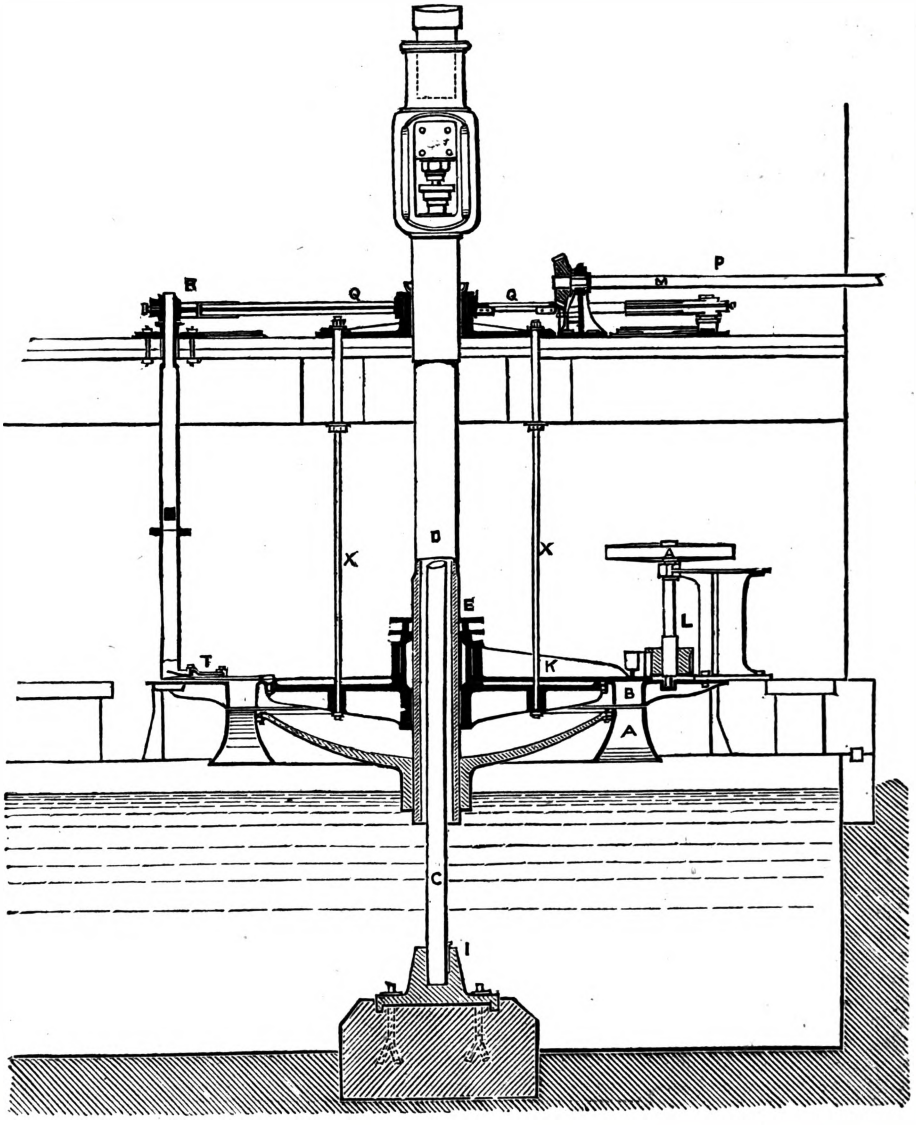

with two independent register-valves. But in many cases M. Girard prefers to supply the wheel upon only $\frac{1}{2}$ or $\frac{1}{4}$ of its circumference in order that its orifices may be larger, and so, less liable to

be blocked up. These reasons led him to construct the turbine with a *lateral injector*, represented in Fig. 4064. The sluice of this turbine consists of a simple circular sector or valve, from which M. Fontaine first got the idea of a roller-valve. These turbines possess the immense advantage of being almost wholly open, and therefore are easily inspected, cleaned, and repaired. But it will be seen that they are not suitable to a varying level of back-water, as they cannot work under water (being supplied upon only a small portion of their circumference), and the *hydro-pneumatic* apparatus is not applicable to them.

4063.

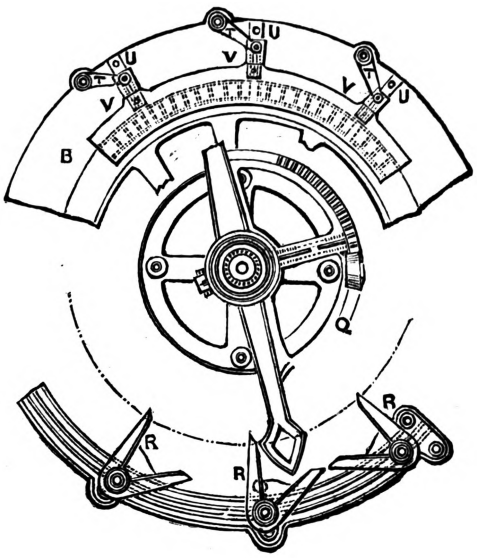

Turbines with a vertical axis possess a delicate part, namely, their pivot, which, if it has to support too heavy a load, or if it turns too rapidly, is liable to become heated. This defect is of great importance in high-fall turbines, the vertical spindle of which is often very long and heavy, and has to carry besides the weight of toothed wheels or pulleys. M. Girard has completely removed this difficulty by the application of two hydraulic pivots, represented in Fig. 4065. This pivot is placed at the bottom of the hollow spindle, that is, upon the floor of the lower mill-race.

It consists of two cast-iron plates, P and P′, provided with grooves. The upper plate P is wedged upon the bottom of the hollow spindle M, beneath the revolving wheel. The lower plate P′ is cast with the part which receives the

4064.

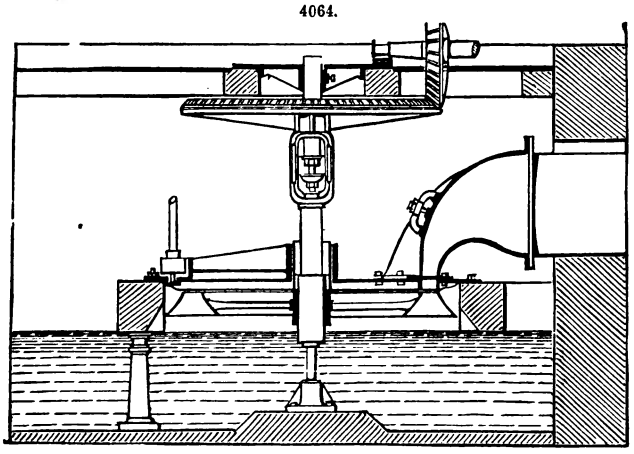

4065.

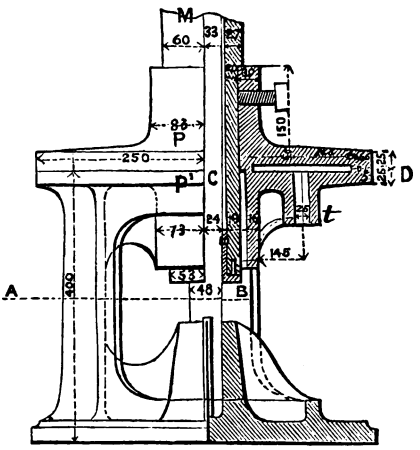

bottom of the central column or fixed spindle; for not withstanding the employment of the hydraulic pivot, M Girard, as a precautionary measure, employs the ordinary pivot suspended to the upper portion of the hollow spindle, as already explained.

A small pipe brings the water from the upper race between the two plates of the pivot by means of the tubulure *t* cast in the lower plate. Of course the diameter of these plates must be calculated according to the weight they have to support and the height of the fall. We have seen this hydraulic pivot applied in many instances, and in all with perfect success.

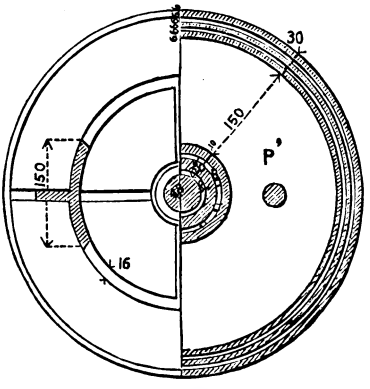

Jonval's Turbine. — Fig. 4066 represents a turbine on Euler's system, with the particular arrangements introduced by Jonval. This turbine may be fixed in any intermediate point between the upper and the lower levels of the fall, taking care only to leave above the fixed portion of the wheel A a sufficient height of water to cause the water to enter properly, that is, without eddies or hollows.

The moving portion of the wheel B is wedged upon an iron spindle, the pivot of which turns in a step or bearing in the centre of a support, arranged as shown in the figure, and bolted to the tank or cistern D, which encloses the turbine and comes down to the floor of the tail-race, where it curves horizontally to allow the water to flow out. The turbine is not provided with

sluices, so that the orifices of the distributor are always fully open. The expenditure of water is regulated by means of a vertical sluice-gate R, placed against the discharge orifice or the well. By closing this gate more or less, the expenditure of the turbine is diminished in proportion to the diminution of volume in the stream. This arrangement is a very bad one;—1, because it produces a contraction which occasions a loss of fall that becomes all the greater as the volume of water diminishes; 2, because the orifices remaining fully open, the velocity of the water is diminished, and the velocity of the turbine must be proportionately reduced if its percentage of useful work is to be maintained. But this condition of giving a variable velocity to the turbine is incompatible with the exigencies of most mills.

4066.

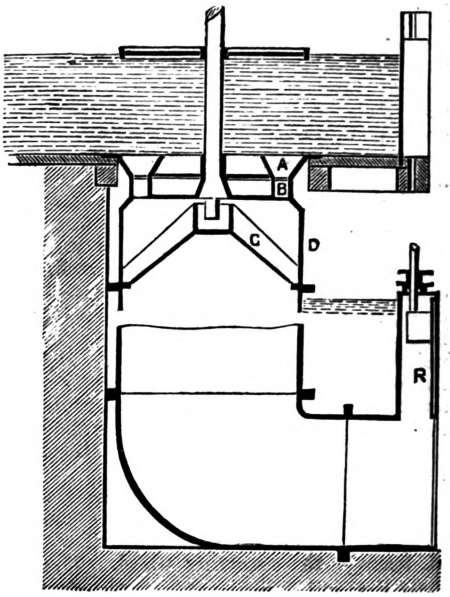

M. André Köchlin has endeavoured to remove this defect by two means. The first and cheapest, but least effective, consists in reducing the breadth of the orifices by means of mitre-wedges. In this way, when the stream is low, the velocity of the water as it enters the turbine may be kept about the same, so that the velocity of the wheel may also be maintained without much variation in the proportion of useful work. But if it were attempted to make this means really effective, it would become impracticable; for as many series of wedges would be required as there were different values of the volume of water furnished by the stream. The other means, which is much more expensive, consists in erecting, upon a stream whose volume of water varies, two or three of Jonval's turbines, when a single one of Girard's, with a partial sluice, would suffice. The capacities of these multiple turbines are calculated in such a way that the quantity of water used by each shall undergo only very slight variations. In flood times, all the turbines are set going; when the water is low, on the contrary, that one only is used which has been erected specially for this season. This artifice is an excellent one for the millwright; but it increases considerably the original outlay. It does, however, possess the advantage of dividing the motive power among several wheels, which enables the mill to keep working while repairs are being executed.

As Jonval's turbine may generally be placed, in the case of moderate or high falls, considerably above the highest back-waters, they may be inspected and repaired in any season without it being necessary to draw off the water previously.

Turbines with a Horizontal Axis.—By applying the theoretical and practical rules which serve in the construction of turbines with a horizontal axis, many engineers and millwrights have erected water-wheels having a horizontal axis, which utilize the water in precisely the same way as ordinary turbines. These are generally known as *turbines with a horizontal axis.*

The Paris Exhibition of 1867 contained only two kinds of these turbines. One was exhibited by a firm of builders at Jenbach (Tyrol). But it is merely a Jonval-Köchlin turbine turned the other way up. Through a horizontal cylindrical tube, which forms the tank or well of the turbine, passes the shaft upon which the wheel is fixed. A circular channel cast in one end of this tube and perpendicular to its axis, receives the feed-pipe; the water is guided upon the wheel by fixed blades, arranged as in Euler's turbine. At the other end of the tube and also perpendicular to it is another similar channel through which the water is discharged; this orifice is provided with a valve for the purpose of regulating the expenditure of water.

These are the chief arrangements of the Jonval-Köchlin turbine. There are many objections to be urged against them. The channels by which the water is introduced and discharged being perpendicular to the axis of the wheel, there is a considerable loss of fall consequent on the sharp angles. The valve which serves to regulate the expenditure of water, by acting upon the discharge orifice, constitutes a faulty arrangement, as we have seen above; and as the wheel works constantly immersed, it must be supplied with water throughout its circumference, if the loss of work which we have already pointed out is to be avoided, and which cannot be removed here by means of compressed air. This necessity led to the adoption of the valve placed against the discharge orifice; but the remedy is a very imperfect one. Let us add, that for streams having a small volume of water and a very high fall, the adoption of this kind of turbine, as well as Fourneyron's, necessitates the giving a small diameter to the turbine, with very small orifices which are easily blocked up. Besides this, we have a great velocity in the shaft of the turbine, and consequently many chances of breakages and repairs.

Two small models of turbines with a horizontal axis on Canson's system were also exhibited. These turbines are of a very simple and primitive construction. The wheel, arranged like that of Fourneyron's turbine if its axis were placed horizontally, is erected upon a horizontal shaft resting upon two ordinary cushions. The water is directed against the lower blades of the wheel from the interior by a simple pipe, the single orifice of which is opened more or less by means of a small vertical sluice. The water is therefore very badly guided on issuing from the pipe, so that the proportion of useful work is small, hardly above 50 per cent. of the gross work expended.

This kind of turbine is, however, frequently met with in the south of France, where the pro-

gress of science has only begun to make itself felt. But it is fast disappearing from mills where a rational utilization of water-power is recognized.

Turbines with a horizontal axis possess, however, special advantages when, as in Canson's system, they receive the water upon a portion only of their circumference. These advantages are the following ;—The whole periphery of the wheel being exposed to sight, it is easy to observe the way in which the water acts, and to keep the blades and the other parts of the turbine in a good condition; the absence of a pivot and all water-tight fittings for the shaft, renders the machine less delicate, allows it to revolve very rapidly without danger, and diminishes consequently the chances of accidents; as the wheel is supplied with water upon a portion only of its circumference ($\frac{1}{4}$ at the most), it follows, as in the case of turbines with a vertical axis and lateral injector, that the orifices of the *fixed sector* or *injector* and those of the wheel present relatively larger dimensions, and consequently less liable to be blocked by the rubbish brought down by the water; and lastly, the level of the back-water may vary in a certain degree without lessening the proportion of useful work, since the turbine may work immersed in the back-water to a depth equal to the versed sine of the arc upon which the water is brought. But to realize all these advantages, the blades, both moving and fixed, must have all the improvements of form and dimensions introduced into the best vertical turbines.

The only horizontal turbines which satisfy all these conditions are those of M. Girard. These turbines may be applied with equal success to very high and to very low falls. The Exhibition of 1867 contained no specimen of these remarkable wheels; but we will give examples of two kinds here.

Fig. 4067 represents a small turbine on this system, adapted for a very high fall and a small volume of water. This model is equally applicable as the special motor of a machine-tool or of a lifting machine, such as paper machines, cranes, and so on. The wheel *a* is fixed upon the end of

4067.

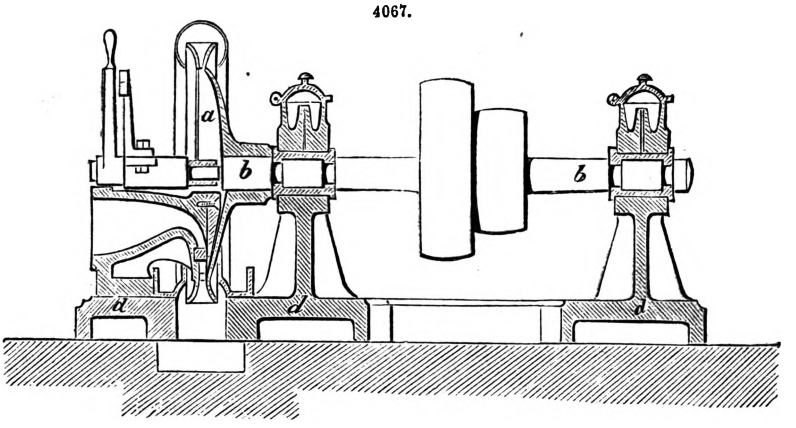

a horizontal shaft *b b*, which is provided with one or more pulleys. The water is brought through a pipe bolted upon the orifice *c* of the injector. The whole is erected upon a single bed-plate, which thus renders all the parts solid with each other.

Fig. 4068 represents a large turbine which works directly and without gearing a horizontal water-pump with a plunger-piston and double action, of which M. Girard has lately made many and remarkable applications for raising water for supplying towns. It will be easily seen that this turbine may be applied (as indeed it has been) to any kind of mill. The wheel *a* is erected upon a horizontal wrought-iron shaft, and rests upon two cushions. The injector *b* supplies the turbine upon a small portion only of the circumference, which allows large orifices to be used.

The proportion of useful work reached by these turbines may be from 75 to 80 per cent. of the gross work expended. This kind of turbine is suitable to low or moderate falls and large volumes of water. It may be advantageously substituted for any other kind of wheel required to give great power with a low fall. In support of our assertion we mention ;—1, the turbines of $5^{m}\cdot20$ diameter erected by MM. Callon and Girard for supplying water to the town of Le Mans, which give each an effective power equal to 25 horse-power under a fall of 1 mètre; they make from ten to eleven revolutions a minute, and they each drive directly and without gearing two horizontal plunger-piston double-action pumps which force the water up into the reservoirs of the town. Their useful work, *in water raised*, according to the official experiments made by M. Dupuit, the representative of the interests of the town of Le Mans, is equal to 0·56 of the gross motive work of the fall; hence we may conclude that as the proportion of the useful work of the pumps is 75 per cent., that of the wheels in question is 75 per cent.; 2, the four turbines of $11^{m}\cdot60$ in diameter erected by M. Girard for the water-works of Paris, at Saint Maur, on the Marne, which supply the large reservoirs recently constructed at Ménilmontant. Each of these wheels gives an effective power equal to 120 horse-power, under a fall that varies from 5 to $2^{m}\cdot50$. Each of them works directly and without gearing a pump similar to those described above. Experiments made upon these powerful engines by Parisian engineers have shown a proportion of useful work in water raised of 64 per cent. A remarkable peculiarity of these wheels is their sluice. It consists of a series of vertical iron gates or hatches, each worked by a piston moving in a double-action cylinder, into which the air from the pump reservoirs is let. The driver has merely to turn

on or off certain cocks to raise or lower the sluices; this contrivance requires no labour, and it is capable of stopping the wheel in a few seconds. This latter quality is of great importance in case of accidents.

4068.

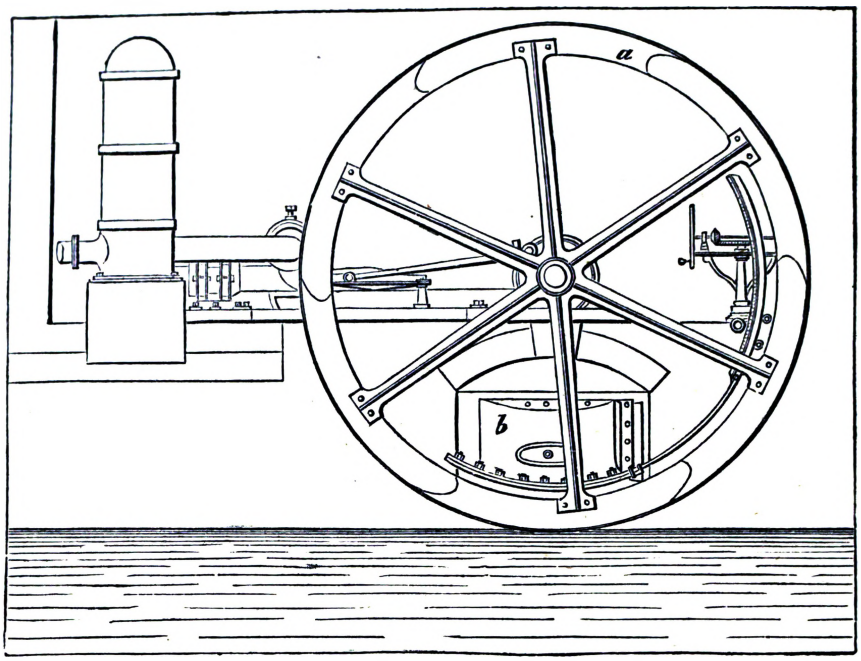

In bringing our remarks on turbines to a close we will give, Fig. 4069, a sketch of a particular kind of turbine with a horizontal axis, called the *screw-wheel*, designed to utilize the power of large streams having a very low fall (from $0^m \cdot 50$ to $0^m \cdot 60$) and a considerable volume of water. Two of these wheels were erected some time ago by M. Girard, at Noisiel-sur-Marne. As a reference to the figure will show, the wheel has its axis in that of the canal, and turns consequently in a plane

4069.

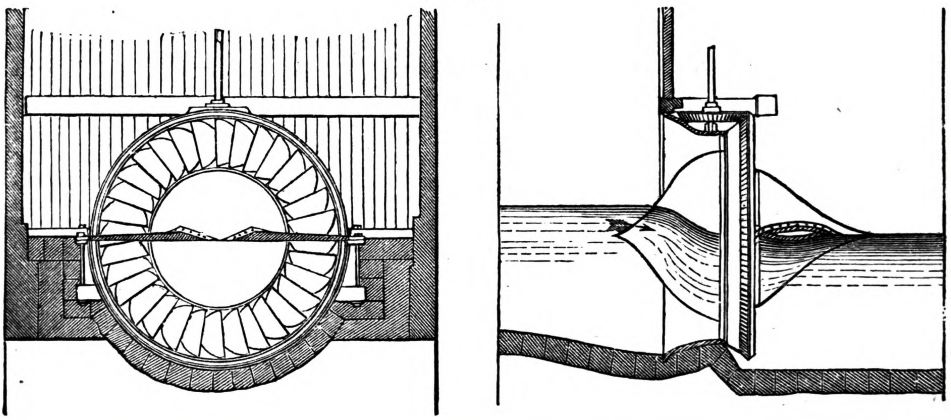

perpendicular to the direction of the water. This kind of turbine has no sluice; the volume of water which it expends increases in proportion as the fall diminishes, and diminishes, on the contrary, in proportion as the fall increases. We think it might be very advantageously applied to our large streams, in conjunction with the large turbine-wheel described above.

The variety of hydraulic machines that we next introduce is a water-wheel, which belongs to the turbine class, and which was invented and brought successfully into use by James Thomson, engineer, Belfast.

In this machine the moving wheel is placed within a chamber of a nearly circular form. The water is injected into the chamber tangentially at the circumference, and thus it receives a rapid motion of rotation. Retaining this motion it passes onwards towards the centre, where alone it is free to make its exit. The wheel, which is placed within the chamber, and which almost entirely fills it, is divided by thin partitions into a great number of radiating passages. Through these passages the water must flow on its course towards the centre; and in doing so it imparts its own

rotatory motion to the wheel. The whirlpool of water acting within the wheel-chamber, being one principal feature of this turbine, leads to the name *Vortex* as a suitable designation for the machine as a whole.

The vortex admits of several modes of construction, but the two principal forms are the one adapted for high falls and the one for low falls. The former may be called the high-pressure vortex, and the latter the low-pressure vortex. Examples of these two kinds, in operation at two mills near Belfast, are delineated in Figs. 4070 to 4072, with merely a few unimportant deviations from the actual constructions.

Figs. 4070, 4071, are respectively a vertical section, and a plan of a vortex of the high-pressure kind in use at the Low Lodge Mill, near Belfast, for grinding Indian corn. In these figures A A is the water-wheel. It is fixed on the upright shaft B, which conveys away the power to the machinery to be driven. The water-wheel occupies the central part of the upper division of a strong cast-iron case C C; and the part occupied by the wheel is called the *wheel-chamber*. D D is the lower division of the case, and is called the *supply chamber*. It receives the water directly from the supply pipe, of which the lower extremity is shown at E, and delivers it into the outer part of the upper division, by four large openings F, in the partition between the two divisions. The

4070.

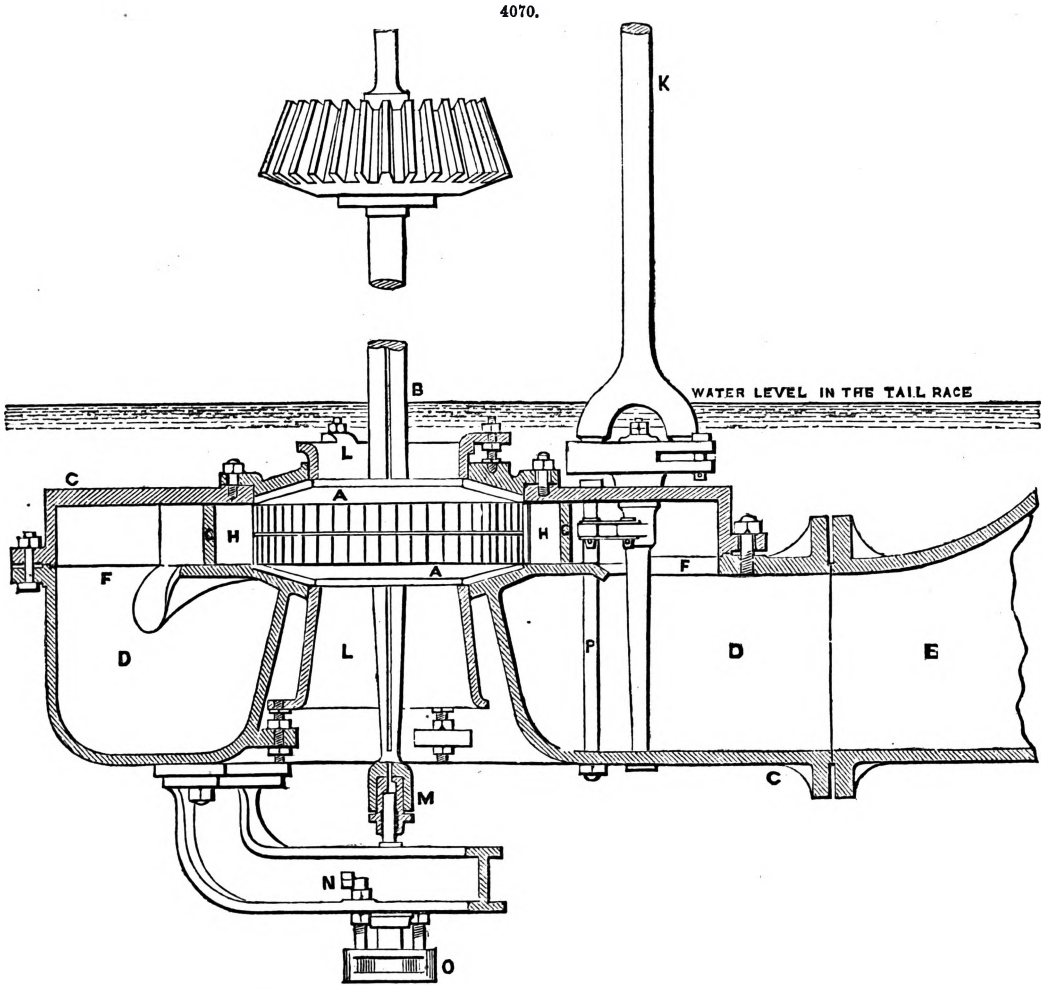

outer part of the upper division is called the *guide-blade chamber*, from its containing four guide-blades G, which direct the water tangentially into the wheel-chamber. Immediately after being injected into the wheel-chamber the water is received by the curved radiating passages of the wheel, which are partly seen in Fig. 4071, at a place where both the cover of the wheel-chamber and the upper plate of the wheel are broken away for the purpose of exposing the interior to view. The water, on reaching the inner ends of these curved passages, having already done its work, is allowed to make its exit by two large central orifices, shown distinctly on the figures at the letters L L; the one leading upwards and the other downwards. It then simply flows quietly away; for the vortex being submerged under the surface of the water in the tail-race, the water on being discharged wastes no part of the fall by a further descent. At the central orifices, close joints between the case and the wheel, to prevent the escape of water otherwise than through the wheel itself, are made by means of two annular pieces L L, called *joint-rings*, fitting to the central orifices

of the case, and capable of being adjusted, by means of studs and nuts, so as to come close to the wheel without impeding its motion by friction. The four openings H H, Figs. 4070, 4071, through

4071.

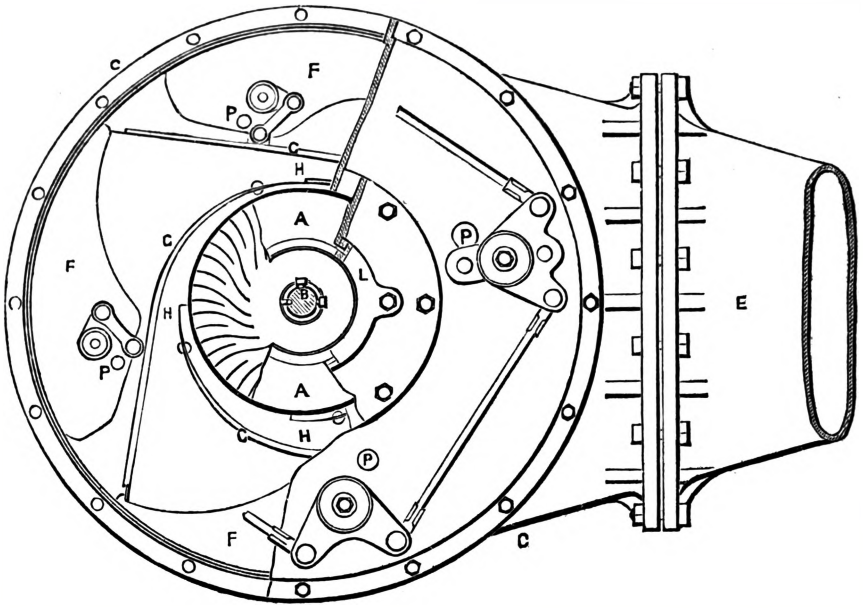

which the water flows into the wheel-chamber, each situated between the point or edge of one guide-blade and the middle of the next, determine by their width the quantity of water admitted, and consequently the power of the wheel. To render this power capable of being varied at pleasure, the guide-blades are made movable round gudgeons or centres near their points; and a spindle K is connected with the guide-blades by means of links, cranks, &c., in such a way that when the spindle is moved, the four entrance orifices are all enlarged or contracted alike. This spindle K, for working the guide-blades, is itself worked by a handle in a convenient position in the mill; and the motion is communicated from the handle through the medium of a worm and sector, which not only serve to multiply the force of the man's hand, but also to prevent the guide-blades from being liable to the accident of slapping, or of being suddenly shut from the force of the water constantly pressing them inwards. The gudgeons of the guide-blades, seen in Fig. 4071 as small circles, are sunk in sockets in the floor and roof of the guide-blade chamber; and so they do not in any way obstruct the flow of the water.

4072.

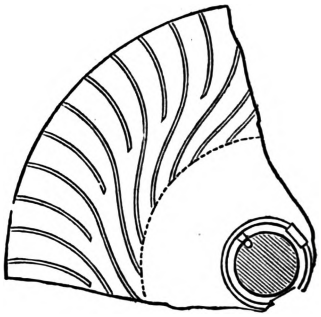

Part of the wheel, Fig. 4071, on a larger scale, to show the form of the vanes more accurately.

M, in Fig. 4070, is the pivot-box of the upright shaft. It contains, fixed within it, an inverted brass cup shown distinctly on the figure; and the cup revolves on an upright pin or pivot with a steel top. The pin is held stationary in a bridge N, which is itself attached to the bottom of the vortex-case. For adjusting the pin as to height a little cross bridge O is made to bear it up, and is capable of being raised or lowered by screws and nuts shown distinctly on the figure. Also for preventing the pin from gradually becoming loose in its socket in the large bridge, two pinching screws are required, of which one is to be seen in the figure. A small pipe fixed at its lower end into the centre of the inverted brass cup, and sunk in an upright groove in the vortex-shaft, affords the means of supplying oil to the rubbing surfaces, over which the oil is spread by a radial groove in the brass. A cavity, shown in the figures, is provided at the lower part of the cup, for the purpose of preventing the oil from being rapidly washed away by the water. Great stress being laid on the supposed necessity for oiling the pivots of turbines by Continental engineers, J. Thomson was led to endeavour to find and adopt the best means for oiling pivots working under water. The oiling, however, is a source of much trouble; and he has found in the course of his experience that pivots of the kind described above, made with brass working on hard steel, and with a radial groove in the brass suitable for spreading water over the rubbing surfaces, will last well without any oil being supplied.

Four tie-bolts, marked P, bind the top and bottom of the case together, so as to prevent the pressure of the water from causing the top to spring up, and so occasioning leakage at the guide-blades or joint-rings.

The height of the fall for this vortex is about 37 ft., and the standard or medium quantity of

water for which the dimensions of the various parts of the wheel and case are calculated is 540 cub. ft. a minute. With this fall and water-supply the estimated power is 28 horse-power, the efficiency being taken at 75 per cent. The proper speed of the wheel, calculated in accordance with its diameter and the velocity of the water entering its chamber, is 355 revolutions a minute. The diameter of the wheel is 22⅝ in., and the extreme diameter of the case is 4 ft. 8 in.

A low-pressure vortex, constructed for another mill near Belfast, is represented in vertical section and plan, in Figs. 4073, 4074. This is essentially the same in principle as the vortex

4073.

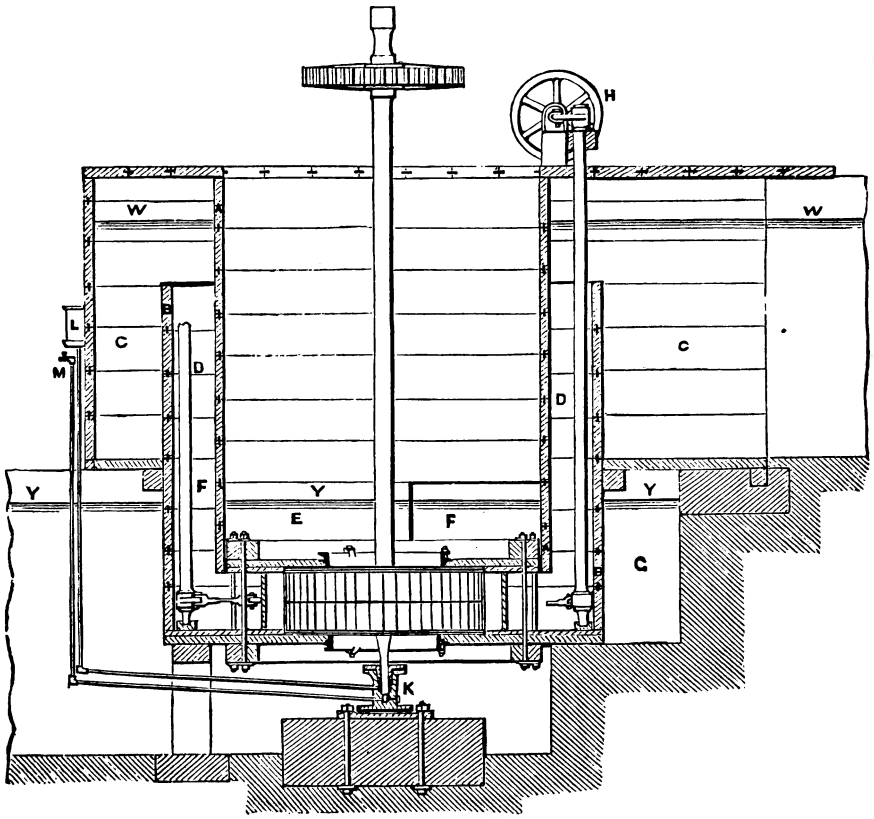

already described, but it differs in the material of which the case is constructed, and in the manner in which the water is led to the guide-blade chamber. In this the case is almost entirely of wood; and, for simplicity, the drawings represent it as if made of wood alone, though in reality, to suit the other arrangements of the mill, brickwork in certain parts was substituted for the wood. The water flows with a free upper surface, W W, into this wooden case, which consists chiefly of two wooden tanks, A A and B B, one within the other. The water-wheel chamber and the guide-blade chamber are situated in the open space between the bottom of the outer and that of the inner tank, and will be readily distinguished by reference to the figures. The water of the head-race, having been led all round the outer tank in the space C C, flows inwards over its edge, and passes downwards by the space D D, between the sides of the two tanks. It then passes through the guide-blade chamber and the water-wheel, just in the same way as was explained in respect to the high-pressure vortex already described; and in this one likewise it makes its exit by two central orifices, the one discharging upwards and the other downwards. The part of the water which passes downwards flows away at once to the tail-race, and that which passes upwards into the space E within the innermost tank, finds a free escape to the tail-race through boxes and other channels, F and G, provided for that purpose. The wheel is completely submerged under the surface of the water in the tail-race, which is represented at its ordinary level at Y Y Y, Fig. 4073, although in floods it may rise to a much greater height. The power of the wheel is regulated in a similar way to that already described in reference to the high-pressure vortex. In this case, however, as will be seen by the figures, the guide-blades are not linked together, but each is provided with a hand-wheel H, by which motion is communicated to itself alone.

In this vortex, the fall being taken at 7 ft., the calculated quantity of water admitted at the standard opening of the guide-blades is 2460 cub. ft. a minute. Then, the efficiency of the wheel being taken at 75 per cent., its power will be 24 horse-power. Also the speed at which the wheel is calculated to revolve is 48 revolutions a minute.

In connection with the pivot of this wheel, arrangements are made which provide for the perfect lubrication of the rubbing surfaces with clean oil. The lower end of the upright revolving shaft enters a stationary pivot-box K, through an opening made oil-tight by hemp and leather packing.

Within the box there is a small stationary steel plate on which the shaft revolves. Within the box, also, there are two oil-chambers, one situated above and round the rubbing surface of this

4074.

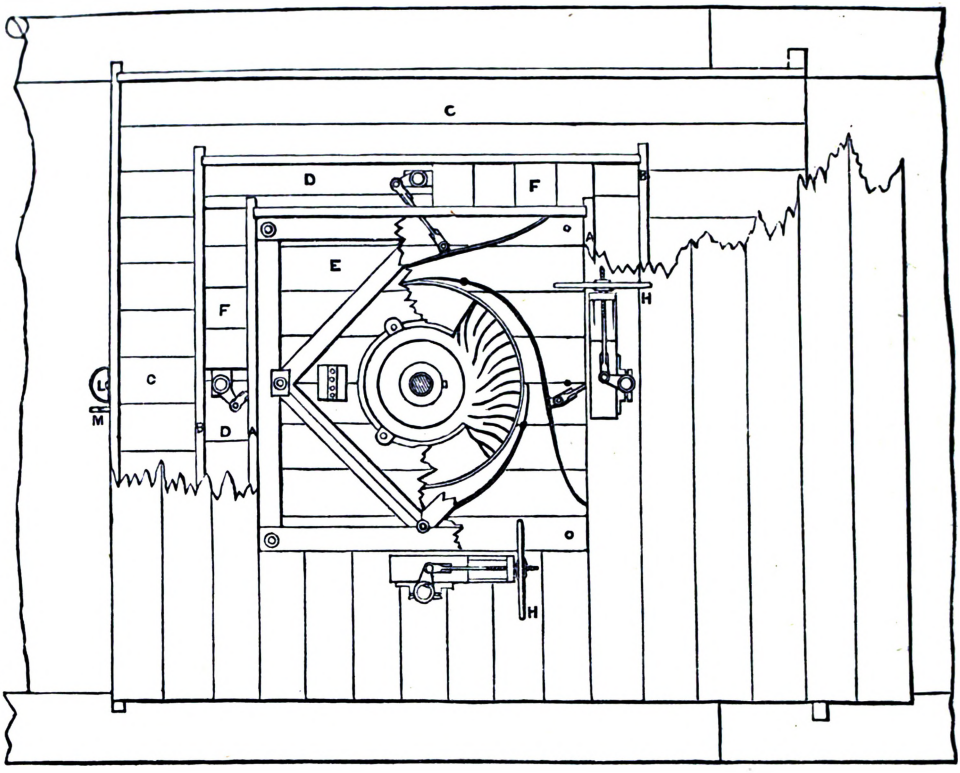

plate, and the other underneath the plate. A constant circulation of the oil is maintained by centrifugal force, which causes it to pass from the lower chamber upwards through a central orifice in the steel plate, then outwards through a radial groove in the bottom of the revolving shaft to the upper chamber, then downwards back to the lower chamber, by one or more grooves at the circumference of the steel plate. The purpose intended to be served by the provision of the lower chamber combined with the passages for the circulation of the oil, is to permit the oil, while passing through the lower chamber, to deposit any grit or any worn metal which it may contain, so that it may be maintained clean and may be washed over the upper surface of the steel plate at every revolution of the radial groove in the bottom of the shaft. A pipe leading from an oil-cistern L, in an accessible situation, conducts oil to the upper chamber of the pivot-box; and another pipe leaves the lower chamber, and terminates, at its upper end, in a stop-cock M. This arrangement allows a flow of oil to be obtained at pleasure from the cistern, down by the one pipe, then through the pivot-box, and then up by the other pipe, and out by the cock. Thus, if any stoppage were to occur in the pipes, it could be at once detected; or if water or air were contained in the pivot-box after the first erection, or at any other time, the water could be removed by the pipe leading to the stop-cock, or the air would of itself escape by the pipe leading to the cistern, which, as well as the other pipe, has a continuous ascent from the pivot-box. Certainty may consequently be attained that the pivot really works in clean oil.

4075

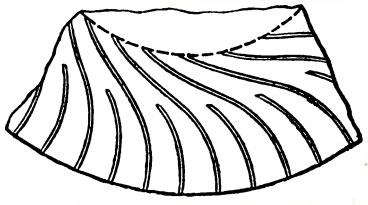

Part of the wheel, Fig. 4074, drawn on a larger scale to show the curvature of the vanes more correctly.

The inventor, J. Thomson, was led to adopt the pivot-box closed round the shaft with oil-tight stuffing, from having learnt of that arrangement having been successfully employed by Köchlin, an engineer of Mühlhausen. As to the other parts of the arrangements just described, he believes the settling chamber with the circulation of oil to be new, and he regards this part of the arrangements as being useful also for pivots working not under water. In respect to the materials selected for the rubbing parts, however, he thinks it necessary to state that some doubts have arisen as to the suitableness of wrought iron to work on steel even when perfectly lubricated; and he would therefore recommend that a small piece of brass should be fixed into the bottom of the shaft, all parts being made to work in the manner already explained.

The two examples which have now been described of vortex water-wheels adapted for very distinct circumstances, will serve to indicate the principal features in the structural arrangements

of these machines in general. Respecting their principles of action, some further explanations will next be given. In these machines the velocity of the circumference is made the same as the velocity of the entering water, and thus there is no impact between the water and the wheel; but, on the contrary, the water enters the radiating conduits of the wheel gently, that is to say, with scarcely any motion in relation to their mouths. In order to attain the equalization of these velocities, it is necessary that the circumference of the wheel should move with the velocity which a heavy body would attain in falling through a vertical space equal to half the vertical fall of the water, or in other words, with the velocity *due* to half the fall; and that the orifices through which the water is injected into the wheel-chamber should be conjointly of such area that when all the water required is flowing through them, it also may have a velocity due to half the fall. Thus one-half only of the fall is employed in producing velocity in the water; and therefore the other half still remains acting on the water within the wheel-chamber at the circumference of the wheel in the condition of fluid pressure. Now, with the velocity already assigned to the wheel, it is found that this fluid pressure is exactly that which is requisite to overcome the centrifugal force of the water in the wheel, and to bring the water to a state of rest at its exit, the mechanical work due to both halves of the fall being transferred to the wheel during the combined action of the moving water and the moving wheel. In the foregoing statements, the effects of fluid friction, and of some other modifying influences, are, for simplicity, left out of consideration; but in the practical application of the principles, the skill and judgment of the designer must be exercised in taking all such elements as far as possible into account.

In respect to the numerous modifications of construction and arrangement which are admissible in the vortex, while the leading principles of action are retained, it may be sufficient here merely to advert—first, to the use of straight instead of curved radiating passages in the wheel; secondly, to the employment, for simplicity, of invariable entrance orifices, or of fixed instead of movable guide-blades; and lastly, to the placing of the wheel at any height, less than about 30 ft. above the water in the tail-race, combined with the employment of suction-pipes descending from the central discharge orifices, and terminating in the water of the tail-race, so as to render available the part of the fall below the wheel.

In relation to the action of turbines in general, the chief and most commonly recognized conditions, of which the accomplishment is to be aimed at, are that the water should flow through the whole machine with the least possible resistance, and that it should enter the moving wheel without shock, and be discharged from it with only a very inconsiderable velocity. The vortex is in a remarkable degree adapted for the fulfilment of these conditions. The water moving centripetally (instead of centrifugally, which is more usual in turbines) enters at the period of its greatest velocity (that is, just after passing the injection orifices) into the most rapidly moving part of the wheel, the circumference; and, at the period when it ought to be as far as possible deprived of velocity, it passes away by the central part of the wheel, the part which has the least motion. Thus in each case, that of the entrance and that of the discharge, there is an accordance between the velocities of the moving mechanism and the proper velocities of the water.

The principle of injection from without inwards, adopted in the vortex, affords another important advantage in comparison with turbines having the contrary motion of the water; as it allows ample room, in the space outside of the wheel, for large and well-formed injection channels, in which the water can be made very gradually and regularly to converge to the most contracted parts, where it is to have its greatest velocity. It is as a concomitant also of the same principle that the very simple and advantageous mode of regulating the power of the wheel by the movable guide-blades already described can be introduced. This mode, it is to be observed, while giving great variation to the areas of the entrance orifices, retains at all times very suitable forms for the converging water channels.

Another adaptation in the vortex is to be remarked as being highly beneficial, that namely according to which, by the balancing of the contrary fluid pressures due to half the head of water and to the centrifugal force of the water in the wheel, combined with the pressure due to the ejection of the water backwards from the inner ends of the vanes of the wheel when they are curved, only one-half of the work due to the fall is spent in communicating *vis viva* to the water, to be afterwards taken from it during its passage through the wheel; the remainder of the work being communicated through the fluid pressure to the wheel, without any intermediate generation of *vis viva*. Thus the velocity of the water, where it moves fastest in the machine, is kept comparatively low; not exceeding that due to half the height of the fall, while in other turbines the water usually requires to act at much higher velocities. In many of them it attains at two successive times the velocity due to the whole fall. The much smaller amount of action, or agitation, with which the water in the vortex performs its work, causes a material saving of power by diminishing the loss necessarily occasioned by fluid friction.

This description is the one given by the inventor. We referred, p. 1923, to the turbine water-wheel of J. Thomson as that of Williamson Brothers who are the manufacturers of it. The opinion expressed, p. 1923, is that of the experienced hydraulic engineers MM. L. Vigreux and A. Raux; see p. 140, vol. iii., of E. Lacroix's work on the Paris Exhibition of 1867. Many engineers as well as the manufacturers of this vortex water-wheel, hold a different opinion to that of MM. Vigreux and Raux.

Chain-pumps.—Bastier's chain-pump, Figs. 4076, 4077, is very effective; 80 per cent. of the units of work applied are utilized. A vertical iron pipe descends to a little below the level of the water; an endless iron chain, carrying buckets at equal distances, works up the pipe and winds round a wheel erected on the top of the well. The buckets are provided with a pump-gear, consisting of a leathern washer enclosed between two iron discs; the diameter of the washer is a little less than that of the pipe, so as to leave a little play. The lower part of the pipe only is bored to the diameter of the washers, which at this point act as pistons. The object of this arrangement is to diminish

the loss of water without causing much friction. The tube terminates upwards in a trough from which the water flows away. The motive pulley, upon which the chain should arrive tangentially, is scored to receive the links of the chain. The circumference of this pulley should contain an exact number of times the distance between two washers, and hollows should be cut in the groove to receive these washer-plugs; this prevents the chain from slipping. The chain is sufficiently weighty to require only a small guide-pulley at the bottom of the pipe.

4077. 4076.

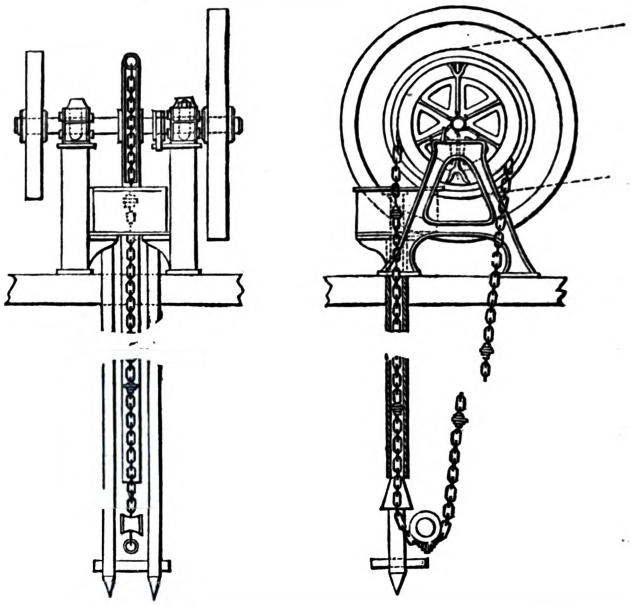

The velocity of rotation of the wheel is at least 30 or 40 revolutions a minute, and may go up to 100, which corresponds to a velocity in the chain of $1^{m} \cdot 50$ to 5 mètres a second. Whatever the inventor may say, however, we think that a high velocity is unfavourable to the percentage of work, first because the friction of the water against the sides of the pipe and the plugs increases, and second, because the water arrives at the top with a useless velocity.

This machine is employed in mines, and with very good results. Theoretically it is adaptable to any height; but if the depth is very great, the useful effect is certainly diminished. The constructor guarantees from 80 to 90 per cent. of work, but as we have not had an opportunity of verifying these figures, we give them under reserve.

M. Durozoi's Hydraulic Propeller.—This is a simple and rustic machine, and in certain cases it may be advantageously substituted for a pump. The ascension-pipe terminates downwards in a fixed cylinder of a considerable diameter, which is sunk beneath the water. A kind of bucket fixed to movable vertical rods outside the cylinder, is moved up and down by means of these rods and a hand-lever fixed on the top of the well. At each stroke the bucket fills itself, and lifts the column of water in the ascension-pipe; as this column cannot fall back into the well, a portion of it is ejected above. The apparatus may be with single or double action, and the arrangement of the levers may be varied at will. It is applicable to any depth, since there is no suction, but it is obvious that a great length in the transmission-rods is objectionable. It is easily fixed, and rarely gets out of order. It may be used to raise dirty water, or to irrigate with liquid manures; or it may be used in tan-yards or in gas-houses, to raise the coal-tar.

Caligny's Conical Pump, without Piston or Valve.—M. Coligny has made many experiments and formed many theories respecting certain oscillating motions of water in pipes; and he has invented a great number of machines for utilizing a fall of water to raise water. We will not describe these machines here, for we do not consider them of very much value; we will merely mention one which he calls a pistonless and valveless pump. This is a simple pipe of iron or zinc, 4 mètres in length, cylindrical throughout the upper half of its length, and conical below, the diameters being $0^{m} \cdot 13$ in the cylindrical portion, and $0^{m} \cdot 36$ at the lower base of the cone. An alternating vertical motion given to this apparatus produces in the water in which it plunges certain oscillations which cause it to ascend to the top of the pipe, where it may be received. Considerable practice is necessary to arrive at this result. It would occupy too much of our space to explain the theory of this instrument.

Champsaur's Autodynamic Elevator.—This is in reality a Héron fountain, rendered self-acting by an ingenious arrangement of floats and valves. The water enters through a pipe *e*, Fig. 4078, into a receptacle C, and passes thence through the pipe *m* into a closed receptacle A. A float *g*, placed in this vessel, and bearing a valve *d*, is weighted so as to have a weight equal to the weight of the water which it displaces; consequently it loses its weight, but does not change its position. The level ascends into the vessel C, up to the float *f*, which, being connected with the float *g*, raises the latter, and closes the valve *d*. When the water has reached the height K, it flows off through the pipe K *i*, which takes it into a second closed receptacle B, placed at the level obtainable. As the receptacle B fills, the air which it contains is compressed, and through the tube *s p* forces the water remaining in A up the ascension-pipe *r q*. When the level of the water has reached *r*, the compressed air escapes through the same ascension-pipe, the atmospheric pressure is restored in both receptacles, the float *g* drops and opens the valve *d*, and the water begins again to fill the receptacle A. During this time the receptacle B must be emptied; for this purpose there is attached to the rod of the discharge-valve *l* a float *o*, the ascending power of which is sufficient to open this valve when the pressure upon it does not exceed that of a column of water of the height of the receptacle. So long as the air is compressed by the column of water K *i*, the valve *l* remains therefore closed; but as soon as the atmospheric pressure is

restored, the float *o* rises, and the water flows off. The valve *l* must remain open until the emptying is complete, and to obtain this result the water is received into a system of concentric vessels *t u*, *x z*, terminating in a discharge-pipe *y*. The inner vessel has an orifice *v*, too small for the quantity of water that issues; the water then lifts the float *n*, which by its rod holds the valve open, and the latter does not close till the vessel B is quite empty.

4078.

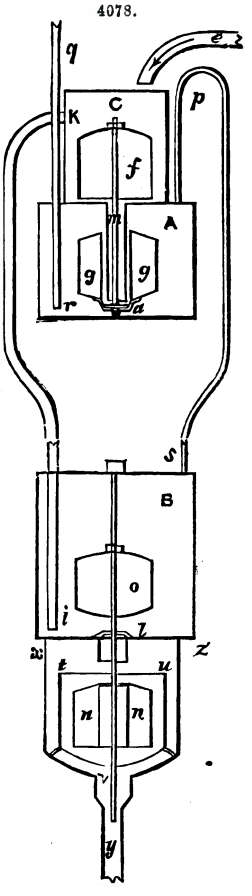

The water is thus raised in an intermittent manner in the ascension-pipe *r q*, if the various parts of the apparatus have suitable relative dimensions. The limit of the useful effect of this machine may be easily determined. Let Q be the quantity of water that arrives through the pipe *e*; H the height of the level of the vessel C above the level of the receptacle B; H′ the height of ascension above the level of the receptacle A; V and V′ the disposable volumes of the two receptacles B and A. It is evident that H′ cannot exceed H, and that it is even a little less. Moreover, by applying Boyle's law, we have $\frac{V}{V'} = \frac{H' + 10^{m} \cdot 33}{H + 10^{m} \cdot 33}$. If H′ = H, we have V = V′; but H′ being less than H, V is a little less than V′. V is the volume of water raised, V′ is the volume of water expended, and their sum is equal to Q; therefore the quantity of water raised is always a little less than the half of quantity of water made use of. As to the dynamic work of the apparatus, it is certainly very great, the loss of height of water being only equal to that of the vessel C, and the resistances being small, for they are reduced to the resistance of the valves and the friction of the water.

Though the autodynamic elevator requires a long description, it is very simple, and when clear water has to be raised, it needs but little attention. It may be of service in certain cases, such, for instance, as distributing the water supplied to a house; the level reaching about the middle of the house, about half of the quantity allowed may be raised to the upper stories, the second half, in this case, not being lost, since it may be used on the ground floor. This has been successfully done at Marseilles. The arrangement of the apparatus may be varied with circumstances, and the inventor says that with a slight modification it may be employed to raise other liquids without their becoming mixed with the motive water.

Pumps proper.—Under this head we shall include all piston-pumps with an alternating motion, with single or double action, whether worked by hand or by an inanimate motor. Reserving for a later page fire-engines, which may be grouped together, and the kind of pumps called unlimited, we will examine a number of models by the principal makers, without confining ourselves to any particular order, a simple classification being very difficult.

Common Pumps.—Scott's Steam-pumps.—Thomas Scott, of Rouen, erected two of his steam-pumps upon the banks of the Seine, for the service of the International Exhibition of 1867. Each of these pumps, or rather pumping machines, consisted of two vertical pumps with a plunger-piston, the rods of which were connected with a beam, and moved in contrary directions. One of Woolf's two-cylinder engines acted upon one end of the beam, the other carried the connecting rod of a fly-wheel common to both machines. The support of the beam was a hollow cast-iron column, which served at the same time as an air-reservoir.

4079.

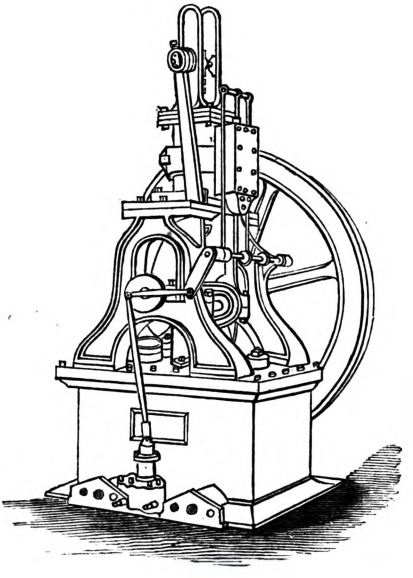

This kind of motor is well adapted, from its slow and regular motion, to the working of large pumps. It has an elegant appearance, and its motion is majestic, as the motion of this form of engine should be; but we are not at all sure that its action would continue satisfactory for any length of time. Such constructions must be very accurately made, and carefully put together.

Carrett, Marshall, and Co.'s Steam-pumps, Fig. 4079.—These machines consist of a steam-engine and a lift and force pump, with a plunger-piston, upon one frame. The kind represented in the figure, which is capable of raising 10 cub. mètres an hour to a height of 30 mètres, consists of a vertical steam-cylinder fixed in the upper part of the frame, and driving a shaft carrying a fly-wheel, which, by means of a crank, drives the plunger-piston. The frame is erected upon the water-cistern, which contains reservoirs of air for the suction and the forcing. If the steam-engine is supplied by a special boiler, a small force-pump may be added (shown in the fore part of the figure) for the service of the boiler. All the parts are put together so as to occupy a small space on the ground.

In another and smaller kind the steam-piston and the plunger have a rod in common, only

interrupted by a frame for the place of the crank which drives the fly-wheel; the reservoirs of air are in the columns of the frame. These arrangements are adapted only to cases where the suction does not exceed 7 or 8 mètres. In the case of a greater height, the motor must be separated from the pump by lowering the latter into the well.

Earle's Steam-pump.—Earle, of Springfield, Massachusetts, has produced a pump, Fig. 4080, which is interesting from its thoroughly American simplicity and originality. The steam-piston and the plunger, both horizontal, are connected by a rod which is common to both. The slide-valve consists of a simple cast-iron cylinder, perfectly balanced, which lets the steam alternately upon the two faces of the piston. The piston-rod is provided with a vertical piece, which, at the end of each stroke, strikes against cleats upon the slide-valve rod, the intermittent motion of which is thus very simply commanded by the motor.

4080.

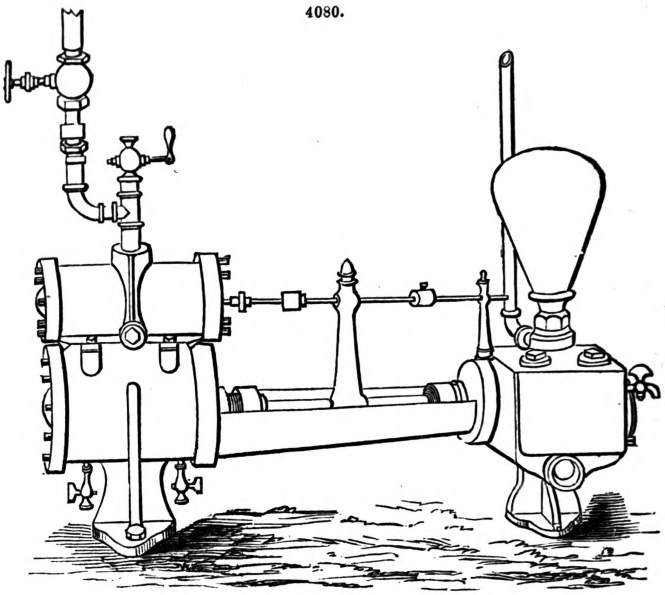

The particular arrangement of the slide-valve obviates the necessity for a fly-wheel or any revolving part, there being no dead-points; the engine is set in motion by simply turning on the steam. We may add that the various parts are arranged so as to be easily inspected, and the construction of the water-box allows of the valves being changed at pleasure; the pistons have a metallic packing, and there is a reservoir of air on the top of the water-cylinder, designed to regulate the ascension.

This pump is certainly a very remarkable one. Simplicity of construction, lightness, and consequently lowness of price, easy motion, suitability to a variable motion (a slow motion, however, gives the highest percentage of work); such are the principal advantages which recommend it to the attention of engineers.

We may here mention a ship's pump, though this belongs rather to marine engines, exhibited in the International Exhibition of 1867, and there called a steam-pump of the Forges et Chantiers

4081.

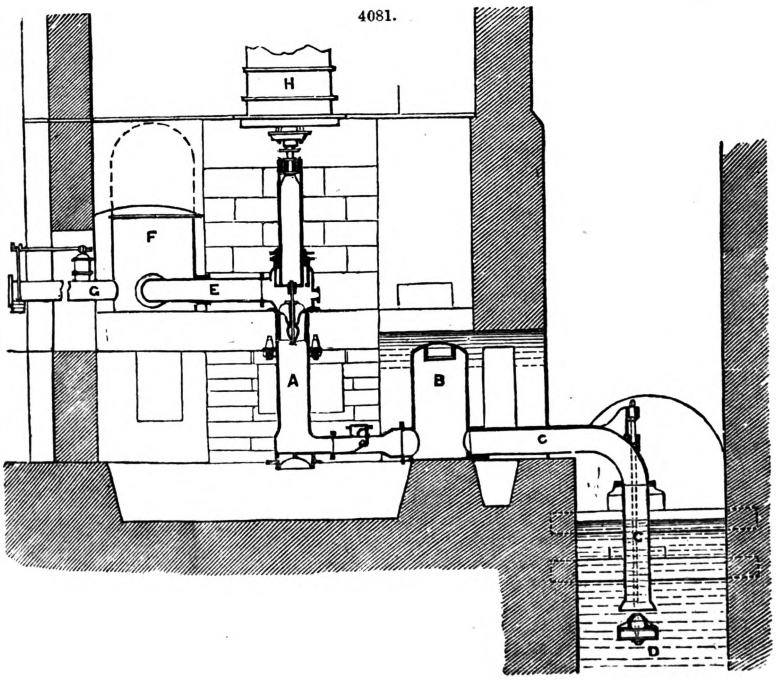

de l'Océan. The arrangement of this pump, as in the case of the foregoing, obviates the necessity for a fly-wheel, or any other revolving part; hence great simplicity of construction and an inconsiderable weight. Two horizontal steam-cylinders act directly upon two water-cylinders, the pistons being connected by rods common to both. One of the steam-pistons is always in the middle of its stroke when the other is at the end of its stroke; hence the two pistons command reciprocally their slide-valves without the medium of eccentrics or any similar contrivances. Besides this a certain regularity of motion is obtained. With a velocity of 100 strokes a minute this engine will raise 600 cub. mètres of water an hour to a height of 15 mètres.

Farcot's Steam-pumps.—To show the nature of these pumps, we will describe one used at the water-works at Angers, Fig. 4081. It is a vertical pump, the piston of which is connected directly with the piston of a steam-cylinder H above. The steam-engine is not shown in the figure, but it is of 45 nominal horse-power, and, at a speed of 16 revolutions a minute, gives an effective work in water raised of 39 horse-power.

The pump A is of single action in the suction and of double action in the forcing. This is effected by means of a double piston with a single rod; the lower end is a hollow, clack-valve piston (diameter $0^m \cdot 48$), and the upper end, a plunger-piston, of a smaller diameter ($0^m \cdot 35$). The common stroke is of $1^m \cdot 20$. During the descent the water passes through the lower piston and is forced by the plunger; during the ascent, there takes place a sucking and a forcing of a volume of water depending on the difference of surface of the two pistons. The proportion between these two surfaces is calculated, regard being had to the heights of sucking and forcing, so as to produce a work about equal to the ascending and descending. The other interesting parts of the machine are: a reservoir of air B placed upon the suction-pipe C; a valve D which may be shut at pleasure; a reservoir of air F upon the forcing pipe E, with a level indicator and a contrivance for supplying the reservoir with air; and a safety-valve G with an alarm whistle.

Another system of Farcot's pumps is shown in Figs. 4082, 4083. This was erected a few years ago to supply water to the town of Lisbon. It includes two barrels or pump-chambers A, A', $0^m \cdot 45$ in diameter, joined at the base by the vessel N. The two pistons B B', have a stroke of $0^m \cdot 15$; their rods are connected by a cross-piece C, connected with the cranks upon the shaft of the driving wheel G by two connecting rods D, D'. Both pistons move together and in the same direction; they are provided with similar clack-valves, but opening inversely. During the ascending motion the piston B' sucks from the tank N, and forces the water above it into the air-reservoir P, and from there to the works; at the same time the piston B, having its valves open, allows the water coming through M to pass. During the descending stroke, the piston B sucks through the pipe M and forces the water beneath B', which allows it to pass. This arrangement possesses the advantage of making the water flow always in the same direction, which is not the case with common pumps. The principle is the same as that of Stolz's twin pump, of which we will speak later, with this difference, that the pistons move simultaneously. There are no other valves than those of the pistons; these are very large, to lessen the resistance to the passage of the water. They consist of three parallel series of inclined traps, Fig. 4084, formed of metallic plates *p*, lined with leather *m* on the closing side, and with india-rubber *n* acting as a spring on the other side; the course of the traps is limited by the stops *q*. The piston B' is

4082.

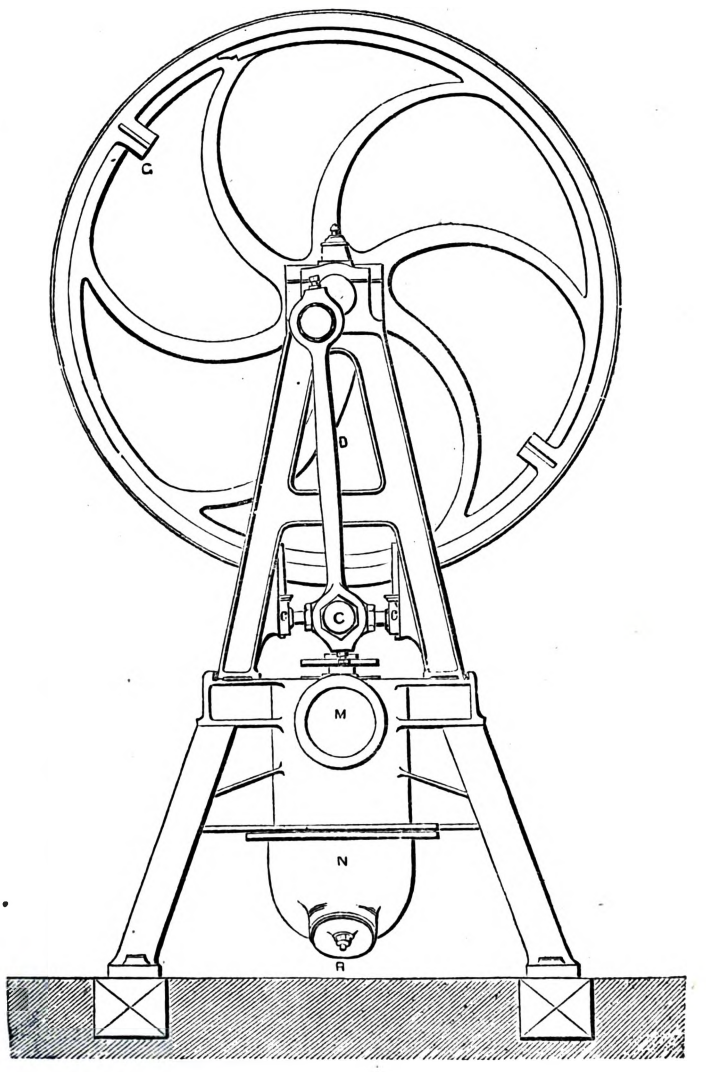

in every respect similar to B, but reversed.

The effective work of this pump is great. For rates of speed varying from 25 to 60 revolutions a minute, experiments have shown a mean of 0·60 of work. The percentage increased with the height, and reached, for a height of 13 mètres, 0·74 for 45 revolutions, and 0·70 for 60 revolutions. The waste is from 2 to 10 per cent. It will be seen that the number of strokes may be pretty great, which renders a light motor sufficient; but the maker has been careful to choose a small stroke in order not to increase the velocity of the water at the expense of the useful effect.

As a specimen of another kind, we give in Fig. 4085 a horizontal double-action pump, the piston of which is solid, but with inner gear. The cylinder, the clack-boxes, and the air-reservoir placed on the top, form a single body, of cast iron, and very compact; the four valves may be easily inspected, and the form of all the parts is such that the water is not compelled to flow round sharp angles, a condition which lessens the resistance.

4083.

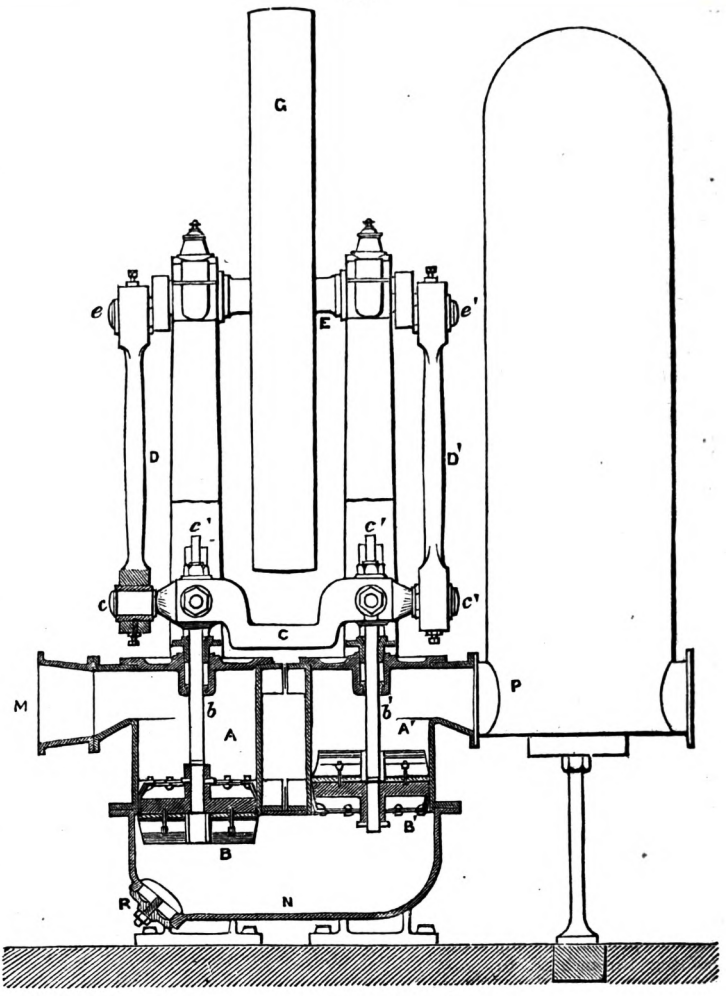

4084.

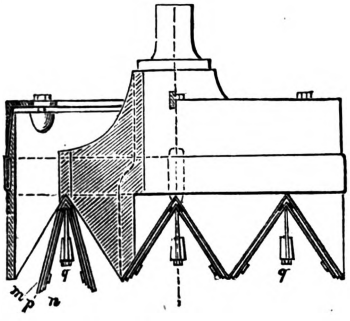

4085.

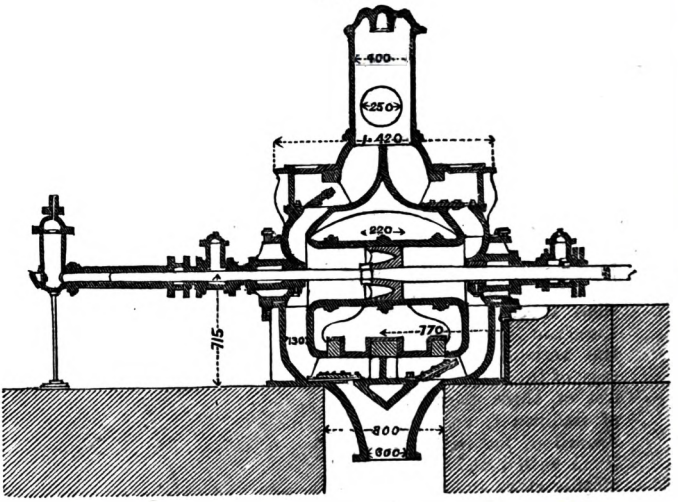

Girard's Horizontal Pump, Figs. 4086 to 4088.—This system of pump, which is designed to be worked by an inanimate motor, comprises two horizontal pump-chambers with a single piston. Each of the chambers is with single action; it is in communication with a double valve box situate at one extremity, into which the suction and delivery pipes open, so that the piston, at each single stroke, sucks the water in one cylinder and forces it in the other. The valves are well guided in their upward course, and they fall

by their own weight, assisted by the action of a spring above, the flection of which may be regulated at pleasure. The suction as well as the delivery tubes are brought together upon the same conduit. The piston is a hollow cast-iron, or better bronze cylinder, traversed from end to end by the rod, and having no external projection; it has a diameter of $0^m \cdot 29$ and a stroke of $0^m \cdot 52$. The gear or leathering is on the outside, which renders its inspection and repair easy. The whole is erected upon a cast-iron stand, on which are the piston-rod guides and the plummer-blocks of the driving shaft. This part is not shown in the figure. The design and the construction of this pump are equally good.

4086.

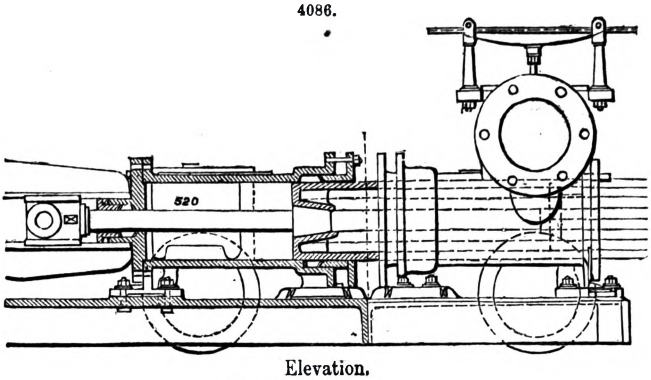

Elevation.

Letestu's Pumps.—M. Letestu's pumps are well known,

4087.

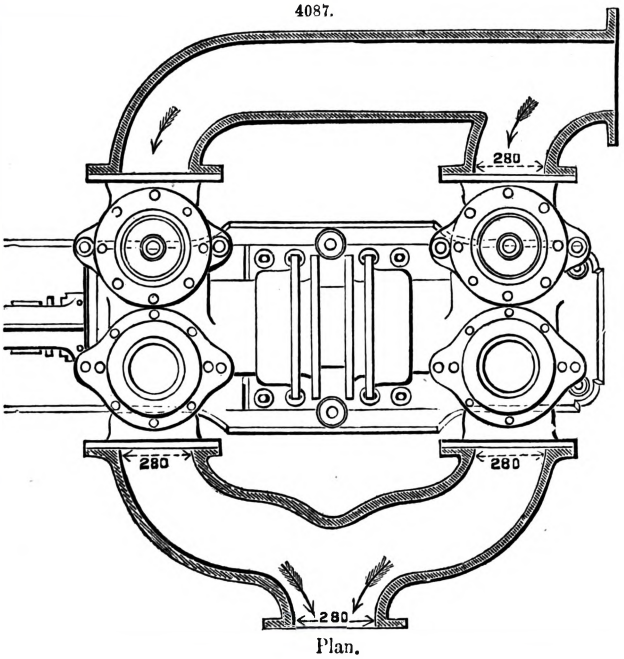

Plan.

4088.

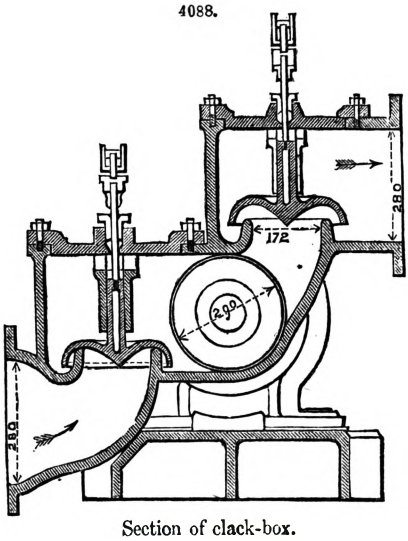

Section of clack-box.

and have been used to empty docks, among other applications. Their peculiarity is in the form of the piston, which, instead of terminating in plane faces, is composed of a copper cone pierced with holes, and covered with a piece of prepared leather rolled back upon itself and replacing the clack-valve. This leather opens during the descent of the piston, and allows the water to pass through the holes, and closes, on the contrary, as the piston ascends. The pump is thus a single-action, suction, and lift pump; the stream which it supplies becomes continuous by employing two barrels, or a reservoir at the top.

Experiments made at the Conservatoire des Arts et Métiers, gave 0·48 to 0·51 as the mean percentage of work; it reached 0·56 at low rates of speed; long strokes, with an equal velocity, are favourable to the useful effect. The waste, or quantity lost, is from 5 to 7 per cent. of the volume generated by the piston.

These pumps possess advantages in many cases. The piston is less liable to choke than the common pistons when thick, muddy water has to be raised; but the foot-valves at the bottom of the cylinder, possessing no peculiar feature, may act badly and stop the working of the pump. The pistons seldom get out of repair, and when they do, the repairs are easily effected. This, with the little difficulty experienced in fixing them, explains the very general adoption of these pumps. The arrangements for driving them necessarily vary with the use they are to be put to, and also with their power. The largest exhibited in the Paris Exhibition was a double, vertical, chambered pump, the chambers $0^m \cdot 60$ in diameter. The pistons were driven by cranks fixed upon two toothed wheels of the same diameter, driven by a single pinion. The motor was a steam-engine; a fly-wheel upon the shaft of the pinion regulated the motion, and a reservoir of air in the middle keeps up a continuous flow. The quantity of water discharged was 400 cub. mètres an hour.

Nillus's Pumps.—This system, the invention of MM. Nillus, of Havre, is commonly known under the name of the *Priest's pump*. The piston is replaced by a piece of flexible leather fixed by its edges to the sides of the chamber (enlarged at this point), and having in the middle a button, to

which a rod and a valve are attached. By communicating a reciprocating motion to the rod, the valve opens and shuts as the leather takes alternately a concave or a convex form, and the water is sucked up and forced out accordingly. These pumps possess the advantage of working well in thick, muddy waters. The useful effect, notwithstanding the diminution of friction due to the absence of a piston, does not exceed that of good common pumps. Experiments made with a two-chambered model, in which the leather was $0^m \cdot 6$ in diameter and the valve $0^m \cdot 15$, showed a mean work of 0·50. This percentage decreased as the speed increased, which is usually the case.

Th rion's Pump.—This pump consists of two pump-chambers with plunger-pistons, the rods of which are actuated by a beam placed above, and supported by the air-reservoir. The beam is not symmetrical; one end is carried out and jointed to a connecting rod, which connects it with a fly-wheel that receives its motion from a portable engine. Gearing is made use of to diminish the speed. The use of a beam that does not receive directly the force from the steam-piston seems to us objectionable; it uselessly increases the weight of the machine, the various parts are not sufficiently compact, which renders a large frame necessary, and the fly-wheel is placed far from the resistance, which is an irrational arrangement.

Henry and Peyrolles's Pumps.—Henry and Peyrolles, successors to M. Stolz, of Paris, have made, in their *twin pumps*, Fig. 4089, a modification of the essential parts of a pump. This variety has two cylinders, and the pistons, which are hollow and provided with valves, move in contrary directions. The middle chamber, through which the water is forced, is in communication with the upper face of only one of the pistons. It will be seen, from an inspection of the figure, that the water, sucked up by the left piston, passes through it and then flows beneath the right piston, which forces it up into the middle chamber. Thus the water always flows in the same direction, and the resistances due to a change of direction avoided. It is true that this advantage is lessened by the fact that the water has a longer circuit to make, by which the friction is increased; but it may be driven at a greater speed than the common systems. We do not know of any experiments made to ascertain the percentage of work obtained from this pump. We will speak of the rotative pumps of this maker farther on.

4089.

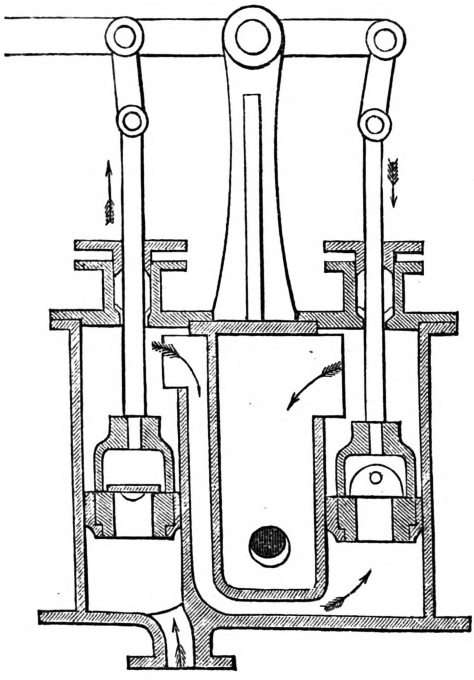

4090.

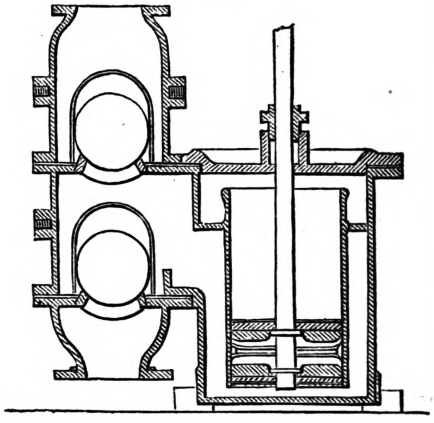

The Castraise Pumps, constructed by MM. Schabaver and Foures, of Castres, Fig. 4090.—These are sucking and forcing, double-action pumps, with a single pump-chamber. The piston is leathered, but has no valves; the pump-chamber, which is either vertical or horizontal, is enclosed in a tank divided by a diaphragm perpendicular to the axis of the piston. The valves, four in number, are hollow india-rubber balls, weighted in the centre with small shot. They are arranged in pairs in two lateral boxes, a section of which is shown in the figure, the lower valve serving for the sucking and the upper for the forcing. Each half of the water-box enclosing the pump-chamber is in constant communication with the interval between the two valves of a box. In the figure the lower part of the tank corresponds with the valves represented. While the piston is sucking through one box it is forcing through the other, which is the case with all double-action pumps. The peculiarity of the Castraise pump is the use of the water-tank spoken of above, the effect of which is to render the volume of water contained in the pump much larger than the volume of the cylinder; the consequence of this is that a portion of the water acted on by suction traverses the valve-chambers only, without passing through the pump-chamber, the piston being, so to speak, always in contact with the same water. This arrangement enables the pump to work in muddy water by placing the piston beyond the reach of injury from the passage of gravel, and so on.

Experiments have given 0·56 as the mean percentage of work, the highest, for a low rate of speed, being 0·66. The waste or loss of water was from 7 to 10 per cent. The action of these pumps, the form and dimensions of which vary with their application, is very satisfactory, and their cost is not great, in spite of their relatively great weight. The makers have added to their latest models an air-reservoir, from which they expect good results.

Perreaux's Pump.—The essential character of Perreaux's pump consists in the use of india-rubber valves, cylindrical at the base and flat at the top, which gives them the form of the mouth-piece of a clarionet. Like this latter, they terminate in two lips which, under the influence of the pressures resulting from the rising and falling of the piston, open or close through the elasticity of the material. One advantage of this elasticity is that the solid matters brought in with the water may pass through without causing injury. The retaining valve is placed at the bottom of the cylinder, whilst the other, suitably extended in a cylindrical form at its base, forms a piston. The india-rubber is stiffened with ribs of the same material. The pump-chamber is of copper, and may be enclosed in wood. The upper part, which is closed, serves as an air-reservoir if the pump is simply a suction-pump; if it is to be forcing as well, a small copper cylinder placed at the side, and also provided with an india-rubber valve, forms the air-reservoir. The various parts are easily taken to pieces. These very simple constructions may be made of any form; they are of great service for agricultural purposes, and whenever it is required to raise water loaded with sand.

Motte's Bellows Pump.—The necessity of keeping the leathering in a good condition in piston-pumps has led to the adoption, for hydraulic purposes, of the principle, familiar to all, of a pair of bellows. Motte's pumps, which are frequently employed to clear the water from excavations, consist of two iron plates put together with leathern sides in exactly the same way as a common pair of bellows. They are worked by means of a beam. We have no numerical data relative to the useful effect, but there must be a considerable loss of power due to the dead-spaces in which the air is compressed and expanded uselessly at each stroke. These machines are well made, and they work very smoothly.

Armandies' Balance-beam Pump.—This pump is similar in principle to the one described above. Two pieces of wood or plate iron, at an obtuse angle with each other and provided with valves, are fixed to a kind of vertical iron beam oscillating about a lower horizontal shaft. A lever attached to the beam applies alternately the plates upon the openings of a cast-iron box at the end of the suction-pipe. The plates and the horizontal shaft are wholly under water; this prevents the heating of the parts and renders greasing unnecessary. Besides this, the valves being always visible, may be easily cleared by the hand when impure water is being raised. This pump is simple and applicable to agricultural uses, or it may be employed to clear away small bodies of water. It must be remarked, however, that it acts only by suction, and cannot be made to force, at least without introducing modifications which would destroy its rustic character.

Fig. 4091 represents an excellent little pump for agricultural purposes. It is a Champonnois pump, and its peculiarity consists in its being double-actioned with a single pump-chamber.

4091.

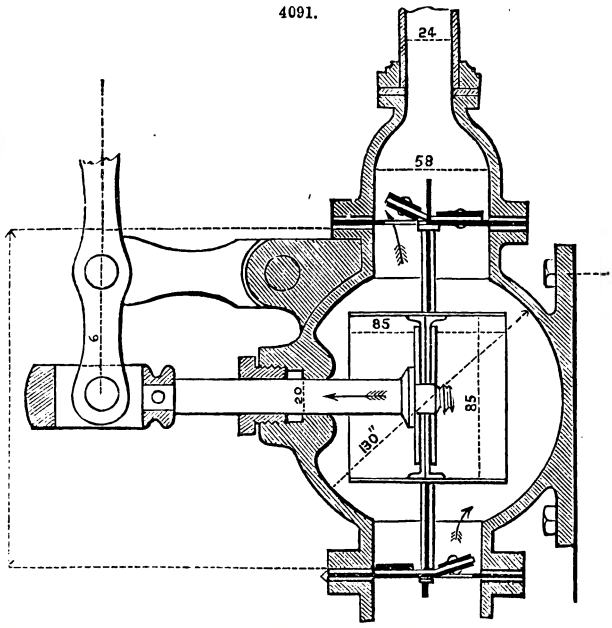

Unlimited Pumps.—The name unlimited pumps has of late years been applied to a great number of apparatus for raising water from a depth greater than 25 or 30 ft., beyond which point suction ceases. We shall not include under this head the common plan of putting a suction-pump down a well at a sufficient level, and working it by means of rods or other contrivances. This plan is constantly made use of in deep wells, and when the depth is very great, as in the case of mines, a number of pumps are placed one above another at different levels and worked by a main rod.

Prudhomme's Pumps.—M. Prudhomme, the first to adopt the name unlimited, invented a system in which columns of water circulating through pipes are substituted for the rods. This apparatus is composed, Fig. 4092, of two distinct parts; one placed near the motor at any distance from the well, the other fixed at the bottom of the well, at 4 or 5 mètres at the most from the level of the water; these two parts are connected by two conduit-pipes O P, R Q.

The apparatus being filled with water, which may be easily done at first starting, suppose the piston C of the upper pump moved forward. It will force the water down the pipe O P, closing the valve *o*. The pressure will be transmitted integrally to the piston K of the lower apparatus; the two pistons K and L, fixed upon the same rod, will move in the direction contrary to that of C, and will force the water up the pipe Q R, opening the valves *s* and *q* and closing *t* and *r*. As the compartments E and G have each a volume equal to that of the cylinder of the upper pump (an essential point), the quantity of water raised will be double that forced by the piston C. Only half

of the total volume of water raised will go to fill the empty space B, whilst the rest will pass through the valve *p*, and enter the pipe S T. When the piston C moves in the contrary direction, the same effects will be produced the other way, and a cylinderful will be raised at each single stroke.

4092.

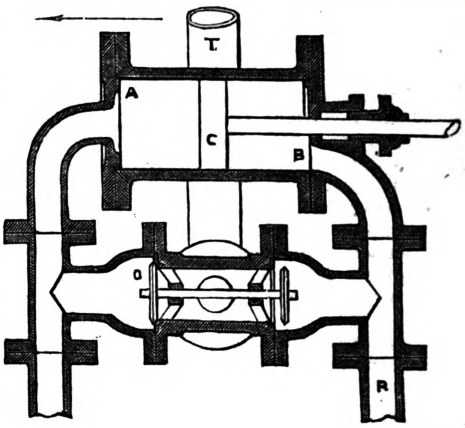

This pump has been applied to several mines of great depth. We do not know of any experiments made to ascertain its percentage of work; but it is probably not lower than that of common pumps, the friction of the water in the pipes being substituted for that of the long rods. It has, however, one grave defect; on account of the sudden change of direction in the motion of the water at each stroke of the piston, ramming shocks are produced which, in a large pump, might cause breakages. To lessen the chances of accident, the two conduit-pipes must be fixed very rigidly, a condition difficult to fulfil in the case of great depths.

Laburthe's Compressed-air Pumps, Fig. 4093.—M. Laburthe's pump is an extremely simple one. The pump, which is placed at any distance from the water to be raised, consists of an air-piston moving in a cylinder, which, by means of an iron pipe, is placed in communication with a box sunk in the well, and provided

4093.

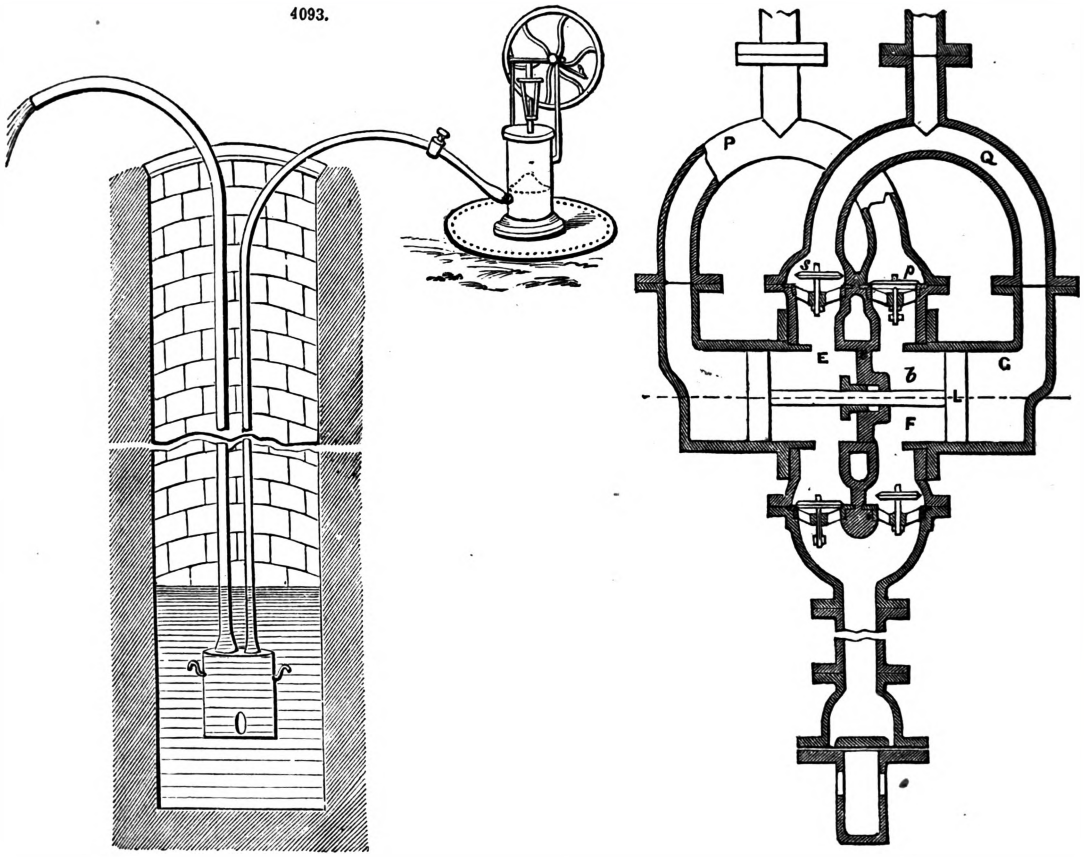

with a valve opening inwards. A second pipe goes from the bottom of the box to the point where it is required to discharge the water. By giving the piston an alternating motion, which is accomplished by the usual means, the compressed air in the abductor-pipe forces the water up the ascending pipe until the box is filled with air at the pressure of the ascending column. At this moment some more water must be let into the box, and to effect this a cock placed upon the upper part of the abductor-pipe is opened. Atmospheric pressure is thus restored in the box, the water of the well flows into it through the valve, and the same action is repeated. Care must be had to provide the bottom of the ascending pipe with a stop-valve. Besides this, the capacity of the box should be considerably greater than that of the ascending pipe, in order that it may not be necessary to interrupt frequently the action of the pump for the purpose of restoring atmospheric pressure in the box. This condition cannot be fulfilled practically

except in the case of pumps that are required to give only a small quantity of water such as those for household purposes. Obviously the action of the pump is independent of the depth, and it is sufficient to give it dimensions proportionate to the height to which the water is to be raised. This arrangement is simple, cheap, and convenient. It is to be feared, however, that the air-pump would require great care to keep the piston air-tight, a task of some difficulty in dealing with compressed air. The percentage of work must be very low, for, by opening the cock for the purpose of restoring the atmospheric pressure, an amount of work is instantaneously lost corresponding to that requisite to compress the air in the box to the pressure of the ascending column.

Some of the machines which we have already described might be ranged under the head of unlimited pumps; such, for example, as Durozoi's propeller and Bastier's chain-pump.

Rotary Pumps.—Revolving-piston Pumps.—As the change of direction in the motion of the water, which takes place in common pumps at each stroke of the piston, constitutes a defect that prevents the attainment of a high rate of speed, some engineers have been induced to substitute rotary pumps for them, in which this objectionable feature is absent. They consist, for the most part, of a cylindrical box in which revolve one or more pistons, which drive the water before them; they are provided with springs arranged so as to prevent communication between the inlet and the outlet pipes. Stolz's pump, for example, is constructed upon this principle. It may be used for domestic purposes, on the condition that only clear water is raised, and that the pump is well constructed. The percentage of work is usually low.

Leclerc's pump, instead of revolving pistons, has two toothed wheels which gear into each other inside a box, and drive the water before them always in the same direction. Another system is to roll an india-rubber tube around the water-box, or, as it is more usually termed, the pump-well. This tube, which is full of water, is compressed by a roller revolving about an axis. This system, however, can be applied only on a very small scale.

There are others belonging to the same order of ideas as the preceding, but they have all the grave defects of being complicated, expensive to repair, and of little useful effect. For these reasons rotary pumps have been abandoned everywhere, except perhaps in America, where they have been more successfully treated. One of the latest improvements effected in this direction by the inventive genius of the Americans, is *Behren's Rotary Engine*, Fig. 4094, made by Dart and Co., of New York, which possesses some original and novel features. The inventor claims

4094.

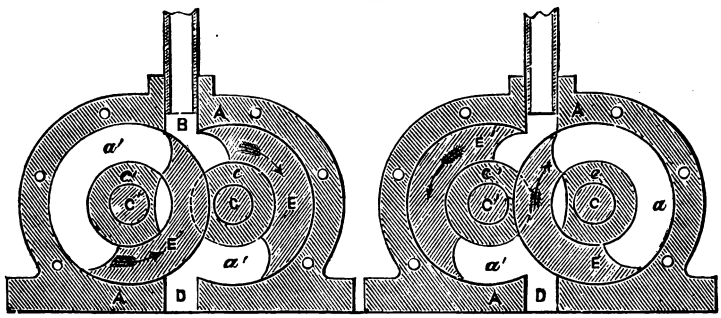

for it the merit of being at once a steam or water motor, and a pump; but it is as a hydraulic machine that it may be employed with the greatest advantage. A cast-iron box or well, A, having internally the form of two portions of parallel cylinders entering each other (as shown in the figures), is in communication at B and D with the inlet and outlet pipes. Two parallel shafts, C, C′, pass through the box, as well as two fixed cylindrical sockets, c, c'; these shafts bear on the outside a spur-wheel of the same diameter, so that they turn in contrary directions and with the same velocity. Upon the shafts are fixed two pistons, E, E′, having the form of portion of a ring concentric with the shaft and the face of the box A. The outer and convex face of these pistons rubs against the face of the cylinders A, and their lower and concave face slides upon the fixed shaft-sheaths c, c', which are grooved to prevent the water from passing directly from B to D without impeding the revolution of the pistons. If the machine is to raise water, one of the shafts C, C′, is set in motion, and, as one drives the other, the pistons E, E′, are moved in contrary directions. By referring to the figures which represent two different positions of the pistons, it will be seen that the water entering through B will pass alternately through the annular spaces a and a', and will be seized successively by each piston during half a revolution, whilst the other piston, as it continues to revolve, will act as a check. We have here supposed the water to enter through B, because the figure may represent the machine employed as a motor; but it is obvious that if the direction of the motion is changed, the water entering at O will ascend through the pipe B.

It is not our business to examine here the value of this machine as a motor, still less as a steam motor; but as a pump it is very serviceable. It is simple, it fills only a small space, it may work with a high velocity, and it gives, without an air-reservoir, a continuous jet. It must, however, be made and put together very carefully. It would be interesting to know its percentage of work, but we have been unable to obtain information on this point We know only that in America it is employed in breweries and sugar-works, where it may be used to raise thick and hot liquids, on the condition, no doubt, that there be no suction of the hot liquids.

Centrifugal Pumps.—The idea of employing centrifugal force to raise water is of considerable antiquity; but Appold was the first to construct machines conveniently founded upon this principle; and so scientifically were his machines devised that even in the present day the best are those which most nearly resemble his model.

Centrifugal pumps are really water fans, formed of straight or curved blades, turning rapidly about a vertical or horizontal axis, and enclosed in a box. The water, entering through the centre of the wheel, is driven by the blades towards the circumference, and thence forced into the ascending pipe. At the same time the outward flow of the water causes a diminution of pressure about the axis, and this brings up the water from the lower reservoir. The height to which the water will ascend increases with the velocity of rotation. A simple calculation will show the relation between these two quantities. Calling the velocity in mètres a second at the end of the blades V, the extreme radius of these blades R, the number of revolutions a minute N, the weight of the water passing a second P, and the height of elevation H, we find (either by the expression of the centrifugal force, or by that of the *vis viva* due to the velocity V), neglecting the friction, that the work developed is $\frac{P V^2}{2g}$. This work, multiplied by the coefficient of the percentage of work, must be equal to the work effected, say P H, $K \frac{P V^2}{2g} = P H$; whence $H = \frac{1}{2g} K V^2 = 0{\cdot}051\, K V^2$. If it be required to introduce the number of revolutions into the formula, $V = \frac{2 \pi R N}{60}$; whence $H = 0{\cdot}00056\, K R^2 N^2$. Experiments have given, in the best centrifugal pumps, $K = 0{\cdot}65$; whence we deduce

$$H = 0{\cdot}034\, V^2 = 0{\cdot}00056\, R^2 N^2.$$

Appold's formula is $V' = 550 + 550 \sqrt{H'}$, V' being the velocity at the circumference in English feet a minute, and H' the height also in English feet, which gives, as the velocity in mètres a second, H being also expressed in mètres, $V = 0^m{\cdot}84 + 4{\cdot}98 \sqrt{H}$; the formula which we have established above leads to $V = 5{\cdot}42 \sqrt{H}$. These two values of V agree sensibly for the ordinary values of H.

It is obvious that the velocity of these machines is necessarily great; they are therefore especially suitable for raising large volumes of water to a small height. An increase of velocity may either raise the water to a greater height, or increase the discharge.

The height of suction should be small, because the ascent of the water being due to the excess of atmospheric pressure above the pressure at the centre of the wheel, this excess must impart to the water a velocity sufficiently great to satisfy the discharge. If this condition is not fulfilled, the water does not enter in sufficient quantity, the machine gets out of water, and of course ceases to work. When circumstances will allow of it, it is well to avoid suction altogether, by placing the pump beneath the level of the lower reservoir; in which case the velocity of rotation may be increased without emptying the pump.

To utilize satisfactorily the motive work, the water must have a low velocity in the inlet and delivery pipes, and a high velocity in the wheel only. The form of the blades should be such that the fillets of water may enter them almost without shock, and especially nearly tangentially to the outer circumference. This condition can be realized only by means of curved blades; a fact that was proved by experiments made in the London Exhibition of 1851, when wheels with curved blades, with straight blades inclined upon the radius, and with straight blades radiating from the centre, were successively placed in the same machine. The percentage in each of these cases for a height of from 15 to 18 ft. was 0·67, 0·42, and 0·24.

It is also necessary that the water, in passing from the very low velocity which it has at the centre of the wheel, to the high velocity of the circumference, should traverse gradually-diminishing sections. In the same way the sections of passage must increase from the point where the water issues from the blades to the ascent-pipe. By thus making the sections inversely proportional to the velocities, the eddying and whirling, which absorb a portion of the work, are avoided. The first result may be obtained either by varying the thickness of the blades so as to give their concave side a different form from that of their convex side, or, as in the case of Lloyd's fan, by making the blades of a uniform thickness, and by diminishing their breadth from the centre of the wheel. The blades are in this case enclosed between two lens-shaped covers widening towards the centre.

4095.

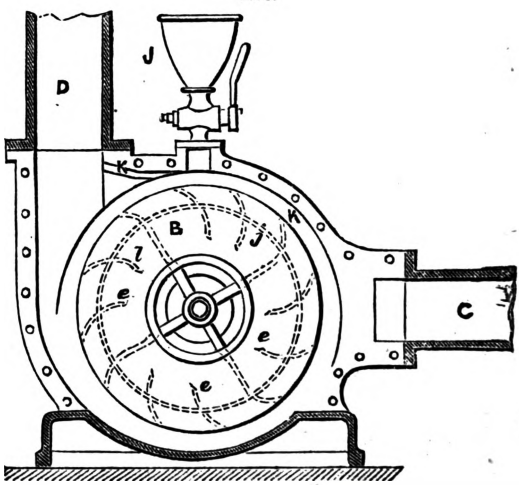

We will examine here some of the best models.

Neut and Dumont's Centrifugal Pumps.—These closely resemble Appold's type; the water brought in by the conduit-pipe C, Figs. 4095, 4096, at the height of the axis, separates into two currents *d* that lead it to

4096.

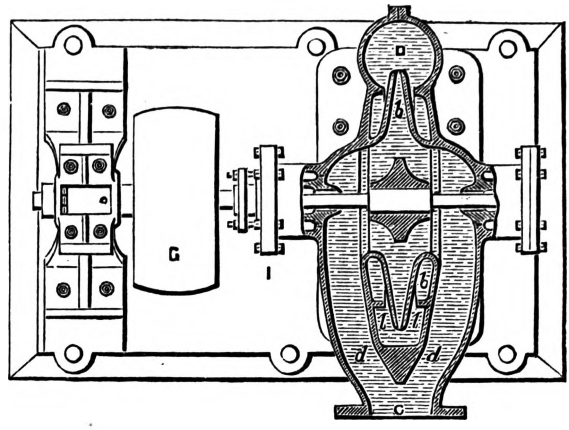

the centre of the wheel, which is formed of two cheeks *b*, between which are the blades *c e*; some of these reach to the nave and are fixed to it, their breadth diminishing from the centre to the circumference. Some circular partitions force the water issuing from the wheel to follow an annular conduit K, the section of which increases progressively up to the ascent-pipe D; this *partly* realizes the conditions indicated above. The body is formed of two symmetrical pieces bolted together; it is traversed by the horizontal shaft X which passes through stuffing boxes and carries the transmission pulley G. The whole rests upon a single bed-plate I. The funnel J serves to fetch the pump at starting. The orifice K′ gives an outlet to the air which may lodge itself in the upper portion. To prevent the air from getting through the stuffing box, the latter is put in communication with the delivery column by means of a pipe constantly filled with water; and, in case the air should get into the centre through the suction-pipe, in order to fetch the pump again without stopping it, two holes are provided which put the centre of the wheel in communication with the interior of the chamber into which the water is forced; this forces the air to escape.

During some experiments made to ascertain the percentage of work, one of these pumps, having a diameter of wheel of $0^m \cdot 300$, with suction and forcing orifices $0^m \cdot 250$ in diameter, raised 138 litres a second to a total height of $5^m \cdot 50$; the velocity being 500 revolutions a minute, the mean percentage of work was 57.

Centrifugal Pumps of Messrs. Gwynne and Co., of London.—These complete and powerful pumps were originally constructed with straight blades, radiating from the centre and provided with a circulation-pipe; but the percentage of work was very low, only 19. Later, profiting by the lessons taught by the Exhibition of 1851, they modified them in the direction of Appold's plan, by curving the end of the blades so as to bring them almost tangentially to the circumference of the disc. This is shown in Figs. 4097 to 4100, which represent a pump of $0^m \cdot 460$ in diameter. The water entering through H, separates into two currents H′ and H″, which enter through the centre of the wheel K′, K″, to issue through the circumference and flow thence to the pipe Z. The blades, six in number, only three of which reach the nave, are of cast iron 14 millimètres thick, curved and bevelled on the outer circumference so as to be only 1 millimètre thick at the

4097

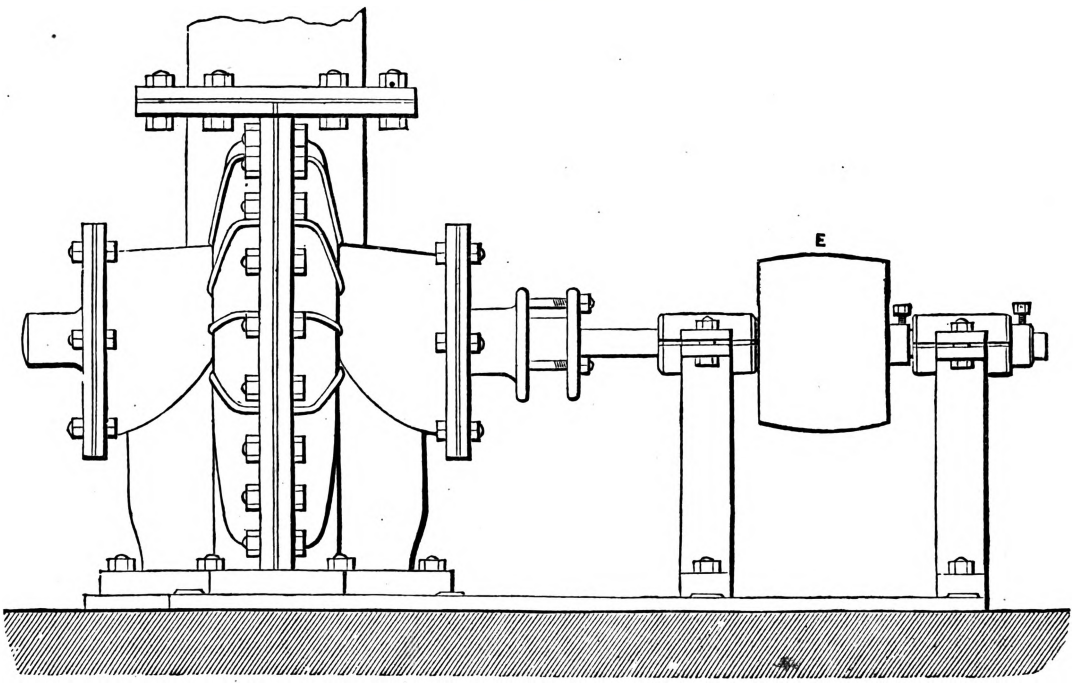

4098.

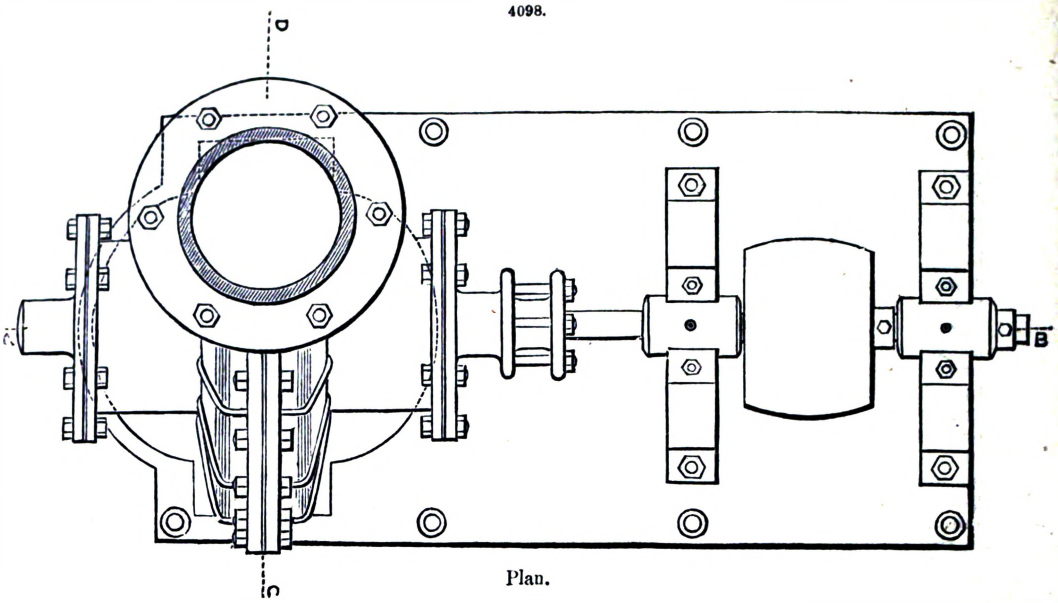

Plan.

4099.

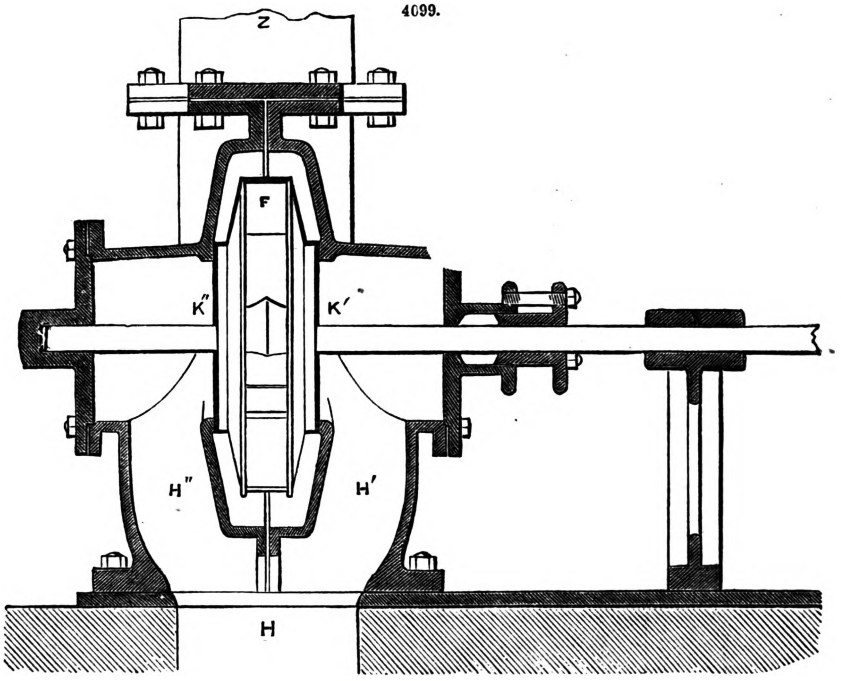

Section through A B.

end. They are also a little rounded where the water enters, but they remain normal to the nave; this lessens the useful effect in consequence of the shocks of the water. The breadth of the blades and their envelope, at first uniform, decreases afterwards up to the end, so as to produce a section varying in an inverse direction to the velocity of the water at different distances from the centre. On issuing from the wheel, the water first passes through an annular space which takes it to the delivery-pipe. A diaphragm G prevents a partial return of the water into this annular space, and an orifice furnishes an outlet to the air which tends to collect at G.

This pump was subjected to experiments at the Conservatoire des Arts et Métiers at Paris, for the purpose of ascertaining its percentage of work. The diameter was $0^m \cdot 460$. The height of aspiration was $0^m \cdot 80$, and the forcing height $9^m \cdot 50$. The number of revolutions varied from 630 to 700 a minute. The maximum useful effect was 0·52, corresponding to 670 revolutions, and to 7 litres of water raised by each revolution. The minimum was 0·32, corresponding to 640 revolutions and 4·75 litres a revolution. The gross mean may be fixed at 0·45.

4100.

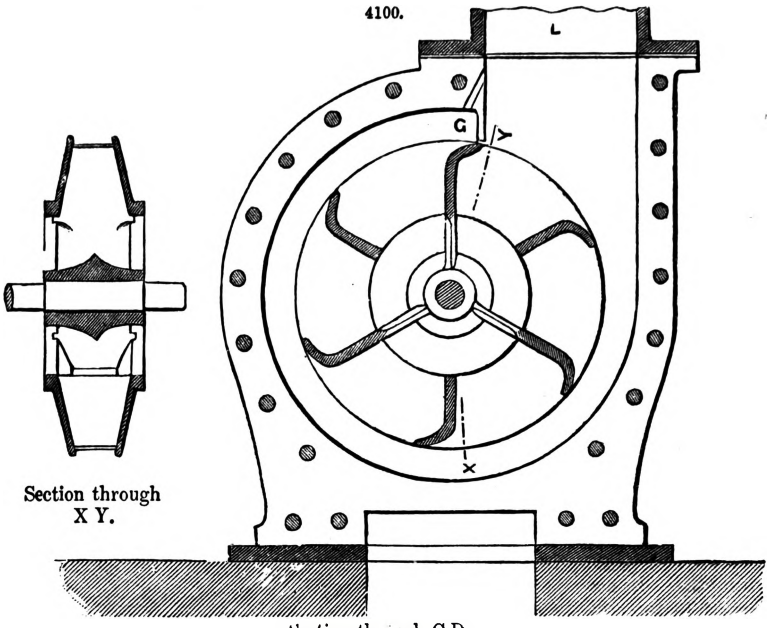

Section through C D.

Coignard and Co.'s Centrifugal Pumps, Figs. 4101, 4102.—In these pumps, Coignard and Co., of Paris, have substituted for the blades in Appold's machine, two revolving pieces A, which they call screws, placed symmetrically upon the spindle D. The water, brought through the pipe L O to the centre of the wheel I, passes through the orifices F into the screws, which impart to it an increasing velocity up to the circumference at G; thence it flows through the conduits M into the common ascending pipe N. The small orifices *a* afford an escape for the air which may collect at the top of the pump. The form of the screws is such that the section of passage decreases from the centre to the circumference, and increases from the issues M up to the delivery-pipe, so as to vary inversely with the velocity. This condition is favourable to the work of the pump, as we have seen above, but the sharp angles, as G, *e*, M, must cause a slight resistance. The construction of these pumps is certainly good; the axis passes through two stuffing-box glands P, the pressure of which may be regulated at pleasure. The whole rests upon one bed-plate.

4101.

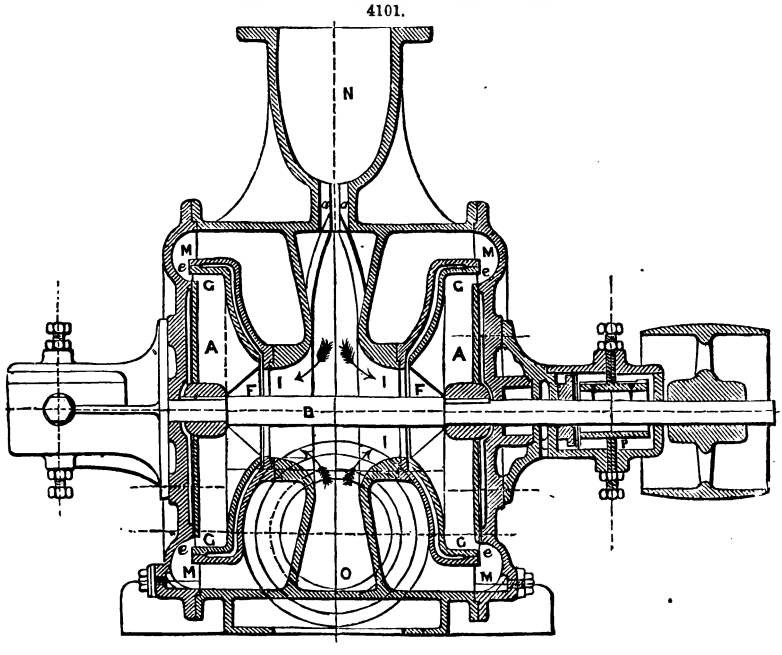

Centrifugal pumps are very serviceable when the height of ascension is not great. They possess the advantage of being adaptable to a varying discharge, and even a varying height, a change of velocity being all that is necessary to render them adequate to the case in question. They are easily

erected and removed, and the absence of valves, except the foot-valve when there is suction, renders them capable of raising dirty water. They always require an inanimate motor. Their chief defect is their great velocity, which cannot be increased above a certain limit without injury to the stuffing of the axis. Attempts have been made to overcome this difficulty, in cases of a great height, by placing several centrifugal wheels upon the same spindle, the water forced up by the first entering into the axis of the second, which takes it up to the third, and so on. The consequence of this is, that the increase of pressure produced in each wheel is added to the others, and that the final pressure for a given velocity increases with the number of discs. This ingenious idea was first applied by John Gwynne; he succeeded in this way in increasing the height of elevation without increasing the velocity of rotation, but at the cost of useful effect. There was a loss of work in passing from one wheel to the other, on account of the sudden changes in the sections of passage, and in the direction of the plan of the water. M. Girard has improved the construction of this machine, and named it the "Lifting turbine," drawings of which are given in Figs. 4103, 4104. It consists of a number of similar wheels, placed one above another and

4102.

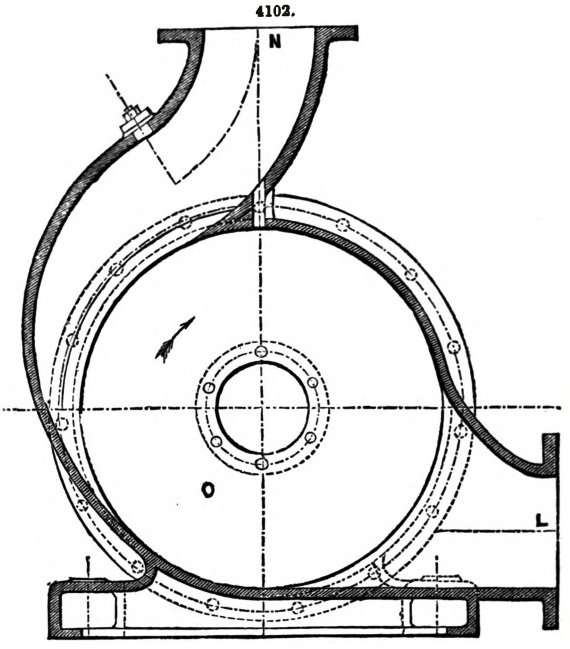

4103.

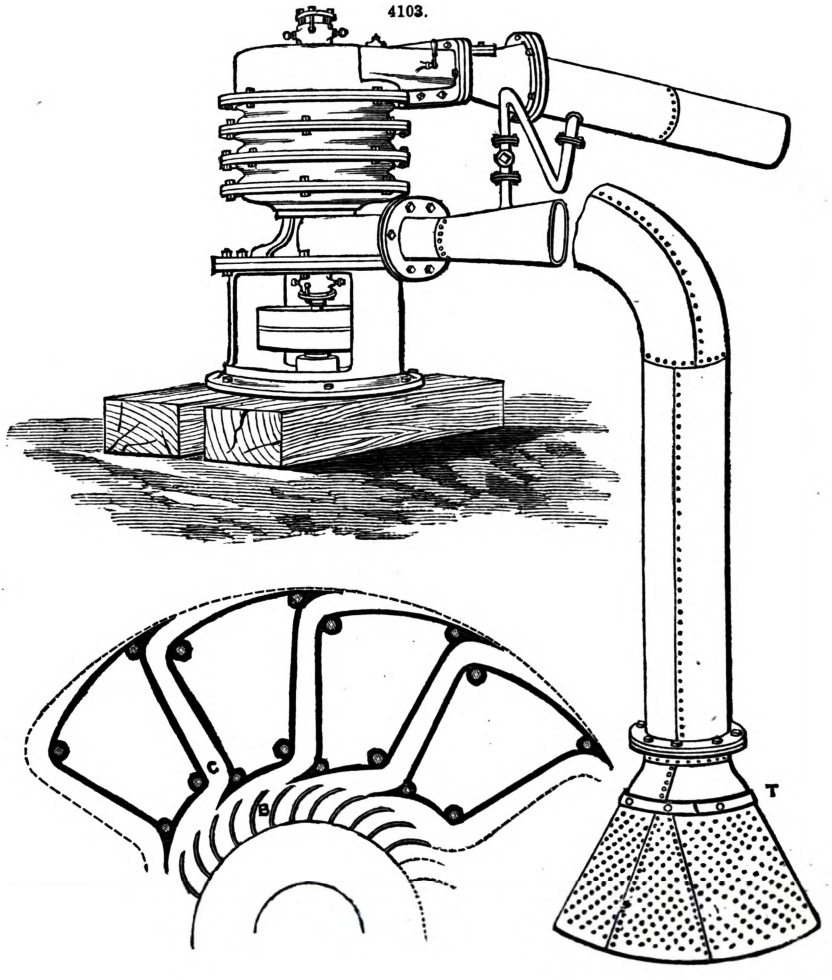

fixed upon a vertical spindle, the whole being enclosed in a cast-iron casing forming partitions between the wheels. The water entering through A is sucked up to the centre, B, of the first wheel, and driven along C D up to the centre, E, of the second, which in its turn drives it along B′ D′, and so on up to the delivery-pipe E. The curves of the blades and of the envelope, or casing, are carefully studied, with a view of making the sections of passage vary progressively, according to the velocity which the water is to have in them, and so to lessen the effect of the sudden changes of direction and of velocity. Each wheel contains 36 curved directrices, B, corresponding to which are 12 channels, C. As details of construction, we may remark that the arrangement of the pivot and collars of the spindle is such that they may be regulated at pleasure; that the tube placing the delivery-pipe in communication with the suction-pipe is intended to prevent the pump from getting out of water in consequence of the entrance of air, and that the rose T at the end of the suction-pipe is for the purpose of keeping out solid matters, which might cause a breakage.

4104.

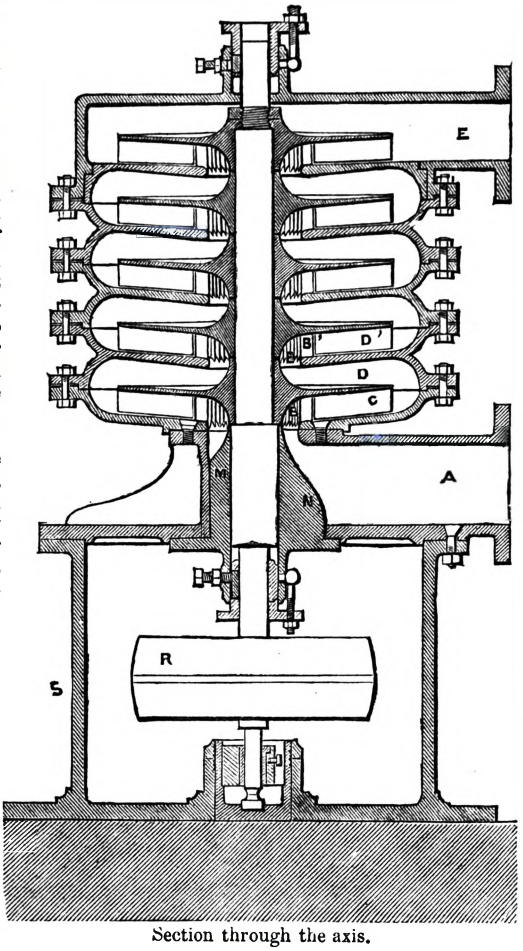

Section through the axis.

Experiments were made with this machine at the Conservatoire des Arts et Métiers, at Paris, the height of suction being, in this case, $1^{m}{\cdot}74$, and the height of delivery varying from 4 to 10 mètres. The following are the means of the results obtained from a model constructed with the latest improvements in details:—

Number of revolutions a minute	300	400	400
	mètres.	mètres.	mètres.
Height of delivery ..	4	4·20	7
Volume of water raised a minute	2800 to 4000 litres.		
Percentage of work ..	0 35 to 0 40.		

These figures show that, for a determinate height of delivery, the velocity is considerably less than that of a centrifugal pump with one disc; but this advantage is obtained by a loss in the percentage of work, and it must be added that the machine is heavier, and consequently more costly and less convenient.

The India pumps, designed and manufactured by Merryweather and Sons, London. These pumps are termed *India pumps* because they are much employed in *India*.

Fig. 4105 is a side elevation of this pump, with the pump-barrel, valves, and suction-breech in sections, Figs. 4106, 4107. A is a stout cast-iron fly-wheel, which is the only piece of cast iron about the whole machine; B is the copper delivery air-vessel, which steadies the stream of water when pumping through a hose, if used as a fire-engine, or when used as a pumping engine prevents concussion in the discharging main; C is a copper suction air-vessel placed in the suction-breech of pump; D, pump-barrel, of which there are two; E is the valve-chamber at lower end of pump; F is the door of the valve-chamber, with a stop-piece to regulate the lift of valve in suction; G is a copper pump-rod, connected at lower end to the spindle-bucket, and at upper end to the kite; H is the passage from breech-chamber to suction air-vessel; I is the suction-breech of pump; J is the suction spindle-valve complete, with its valve-seating arranged so that the whole can be taken out of the pump in one piece if required; K is the bucket fitted with spindle-valve and leather cup, L; R is the crank of motion, working on gun-metal bearings, and mounted on wrought-iron cross-bearers bolted to framing; M, the delivery-piece of pump, to which either flanged pipes may be attached for filling tanks or a screw connecting-piece to receive hose; N, the wrought-iron kite motion to which connect the guide-rods at top and the pump-rod at bottom; O is the gun-metal cover of pump, fitted with stuffing gland and nut; P P, the wrought angle-iron frames carrying the whole of the machinery.

Fire-engines.—Though fire-engines are a kind of forcing pump, yet they differ from this latter in the conditions which they have to fulfil. In the common forcing pump, we give to the water the least velocity possible, in order to utilize to the fullest extent the motive power employed: but in the case of a fire-engine, on the contrary, velocity is the chief object in view. The water has to be thrown to a great height, and in such a way that the jet may overcome the resistance of the air without being divided into spray too soon. The velocity of issue, for given dimensions and number of strokes, depends on the diameter of the orifice of the spout-pipe, and this diameter must be made proportionate to the volume of water to be thrown, and to the distance or length of jet. In 1862 experiments were made in London for the purpose of ascertaining the influence of the size of the jet

4105.

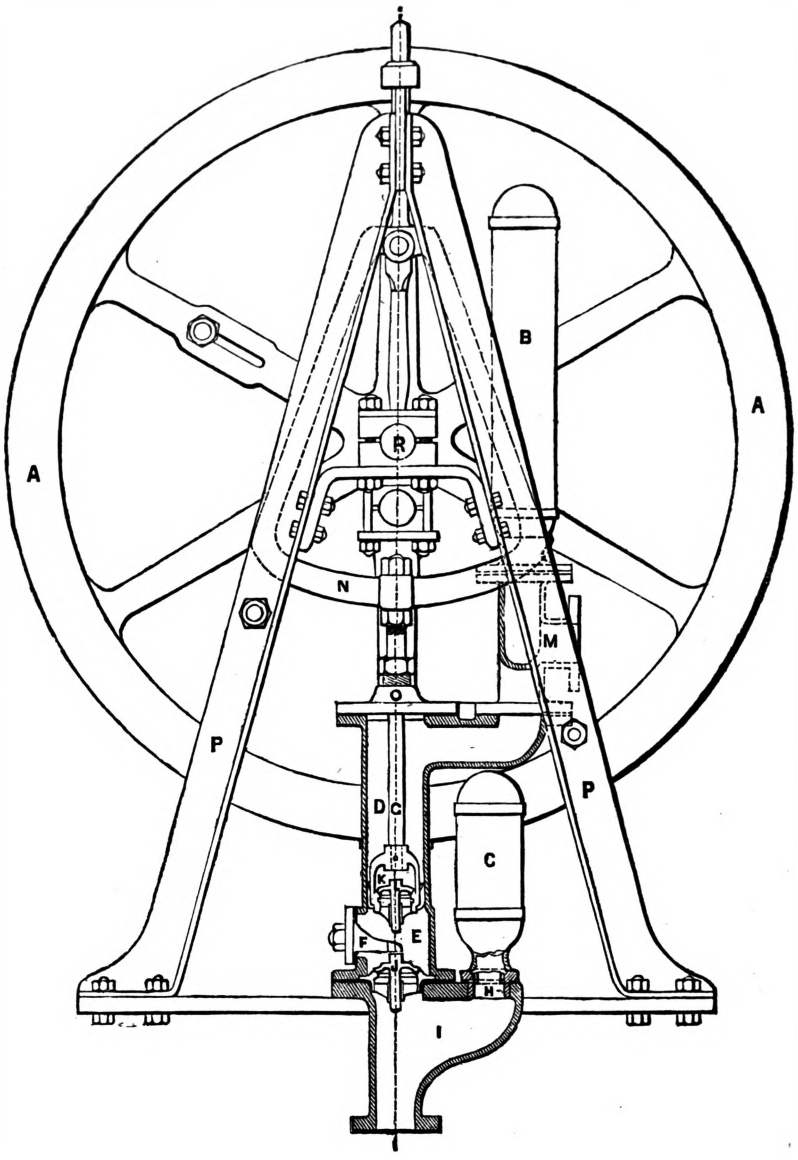

upon its efficiency. These experiments, made with some English pumps and a Letestu pump, led to the conclusion that a large diameter at the end of the spout-pipe is favourable to the effect which it is required to produce, namely, to throw the water to a great horizontal and vertical distance without losing any of it. Thus the English pumps, with an orifice of 20 or 22 millimètres in diameter, were effective at a distance one and a half times greater than that of the French pump with an orifice of 14 millimètres, and the ratio of the quantity of water utilized to the quantity thrown from the spout-pipe was greatly superior for the former. We have no figures relative to the *work* of a fire-engine; but the matter is not one of great importance. Probably 30 per cent. would not be far wrong for the best-made engines.

Steam fire-engines were first used in America. A capital point in this kind of engine is the necessity of having a boiler capable of producing a sufficient quantity of steam in the least possible time, and to this point makers have chiefly directed their attention.

Lee and Larned's Steam Fire-engine.—Lee and Larned, of New York, were the first to construct an engine of this kind. It is provided with a vertical boiler similar to Field's system, that is, furnished with vertical water-tubes closed at the bottom and in communication at the top with the principal body. These tubes are placed in the fire-box, which is itself surrounded by sheets of water; concentric with the first are other tubes, open at both ends, which keep up, in consequence of the decreased density of the heated water charged with steam, a very active circulation, and consequently a rapid vaporization. The pump is rotary, and is driven by a steam-piston having a reciprocating motion and a short stroke. Two fly-wheels served to carry the pump over the dead-points: the whole machine fills only a small space, and it works at a high rate of speed. The engine, with its frame, is carried upon four wheels; the boiler rests directly upon the

back axle through the medium of a spring; the remainder of the engine rests upon the fore axle by means of two springs.

Mazeline's Steam Fire-engine.—To the Messrs. Mazeline, of Havre, is due a modification of Lee and Larned's system. In the place of rotary pump, they have substituted two horizontal water-cylinders, with plungers driven directly by two pistons. The common stroke is $0^m \cdot 220$, the diameter of the plungers $0^m \cdot 152$, and that of the pistons $0^m \cdot 236$. The valves are worked directly by rods, without the medium of eccentrics. There is no fly-wheel, nor any revolving parts. The boiler is vertical, and has a heating surface of 22 square mètres.

Steam Fire-engines of Merryweather and Sons, London, Figs. 4108 to 4112.—Merryweather's lesser engines comprise a horizontal double-action pump worked directly by the steam piston-rod T, Fig. 4110. The slide-valve is worked by the piston-rod; and there is no fly-wheel. The boiler, which is placed behind, is one of Field's system, Fig. 957, like those of the American engines. The whole rests upon a strong iron frame supported upon wheels by means of springs. Seats for the firemen are placed in front, and a reservoir of air completes the engine. See ENGINES, VARIETIES OF, p. 1429, Figs. 2729 to 2732.

The large engines of Merryweather are the same in design, but double. They contain two horizontal direct-action water-cylinders B B, Fig. 4109, and the same number of steam-cylinders. The distribution of the steam is effected as in the small engines, by means of the rods; there is no fly-wheel. The boiler, as in the former case, is one of Field's, and may be fed either by a Giffard injector or by a small pump, which is preferable.

The points to be remarked in these engines are the good construction of the boiler, which is capable of getting up steam in a few minutes while on the way to the fire, the suspension combined so as to cause but little oscillation, the long stroke of the pistons and the large volume of water thrown at a stroke, which allow of a reduction in the velocity.

At the Paris Exhibition

4106.

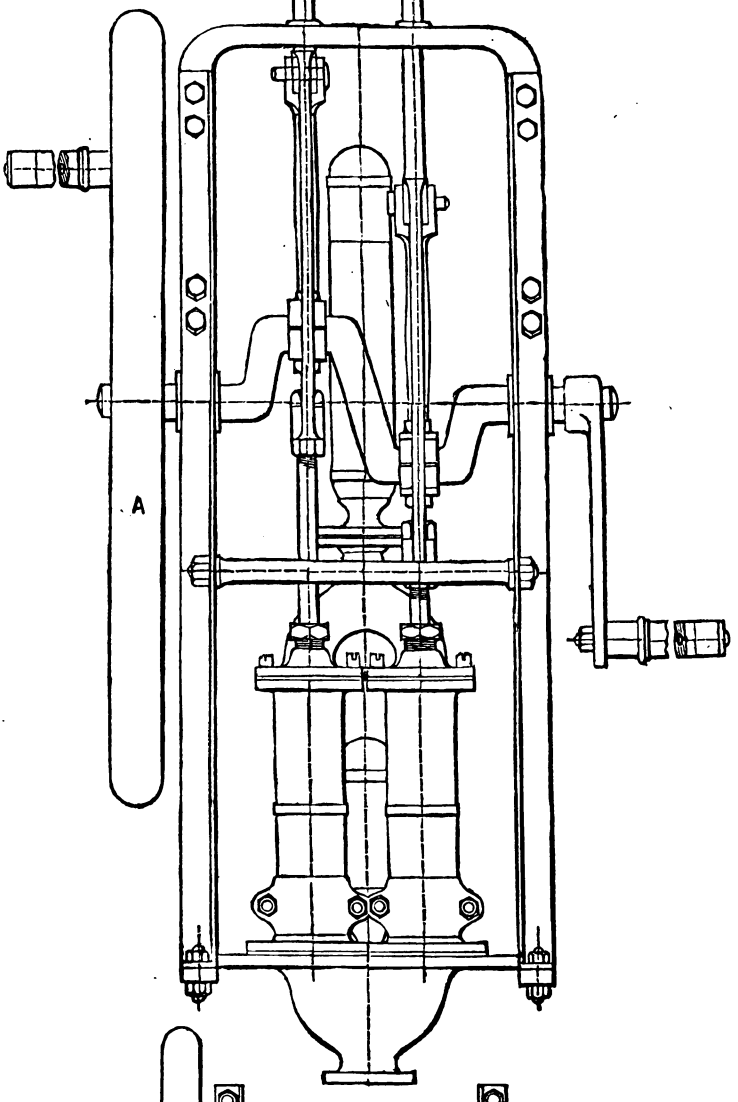

4107.

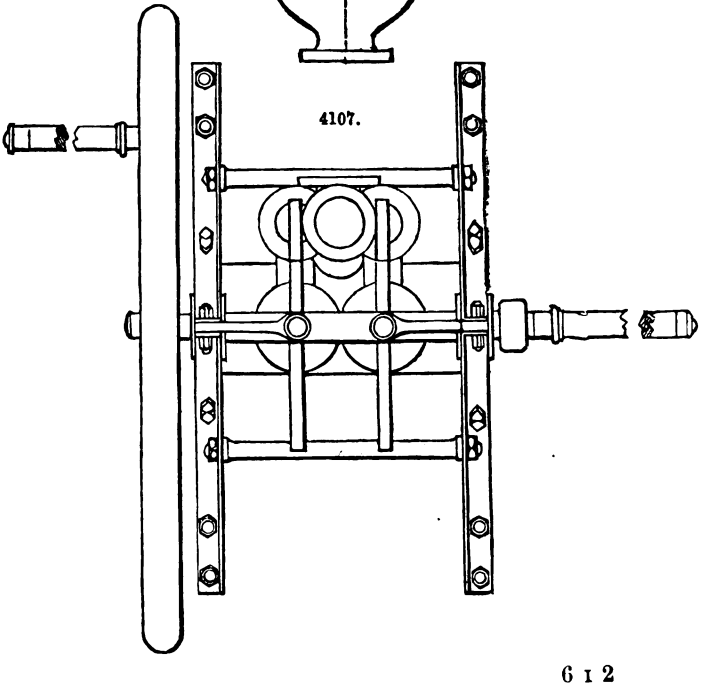

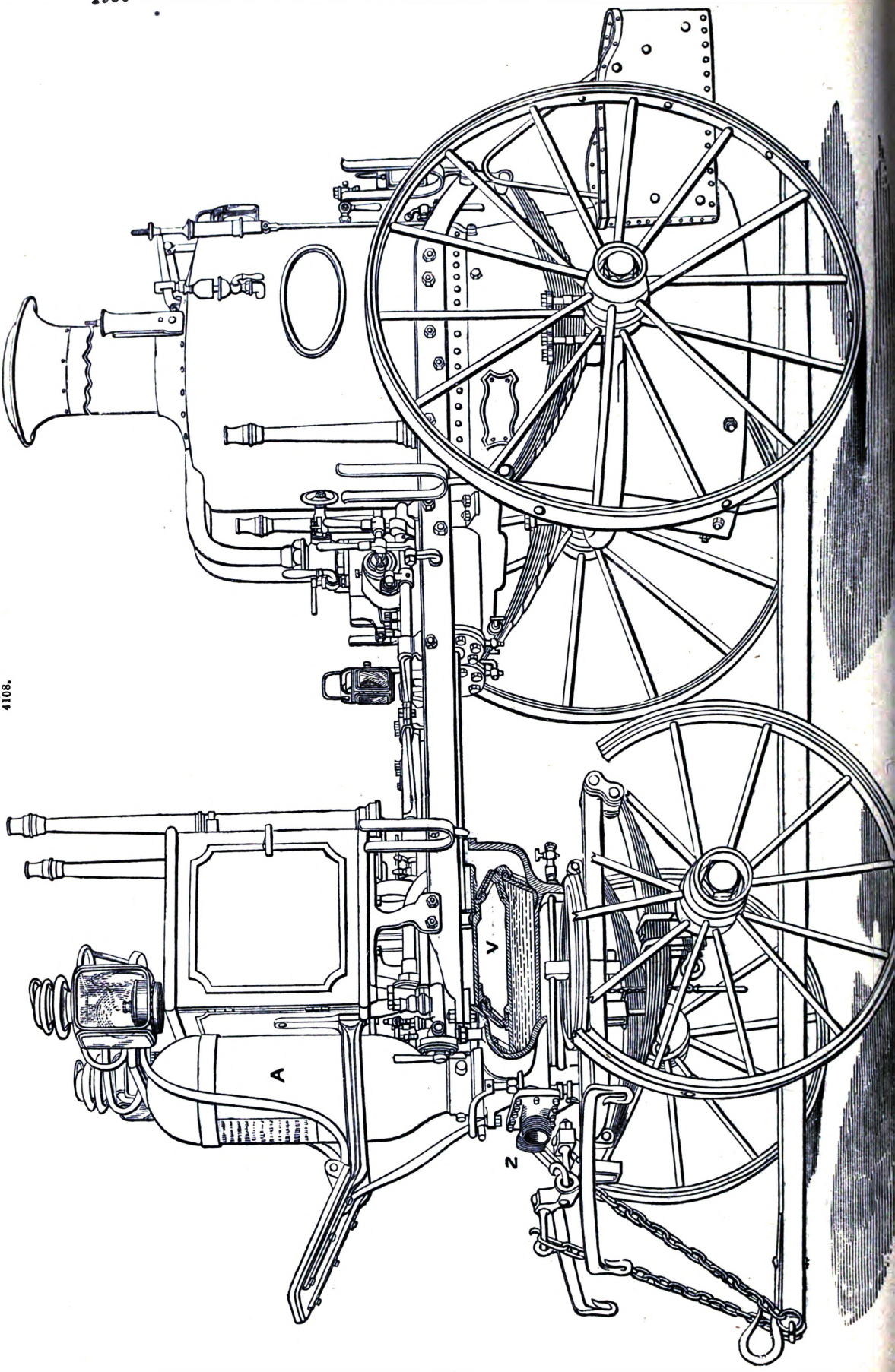

4108.

of 1867, experiments were made with the engines described above, and one of Shand and Mason's engines. The water was taken from the Seine through a suction-pipe 2^{m}·50 long, the delivery being 100 mètres. The lighthouse served as an object to measure the height of the jets by. The boilers having been filled with cold water, the fires were lighted. In 10½ minutes, Merryweather's boiler reached a pressure of seven atmospheres. The engine was then started, and the pressure having increased, maintained itself for an hour between eight and nine atmospheres. Shand and Mason's engine was 13 minutes in getting up steam, and the jet was irregular, especially at starting. One of Mazeline's large engines was then tried against a Shand and Mason; the former was unable to keep up the pressure, and the latter worked badly. On the following day, Merryweather's large engine worked alone throughout the whole day, and in a very satisfactory manner. It threw the water with great regularity either in one jet of 45 millimètres or in four jets of 25 millimètres. We have carefully examined most of the hydraulic machines, termed steam fire-engines, employed in Europe and America to extinguish fires; each of those machines possesses one, two, or more peculiar points of excellence, but the engines that satisfy the required conditions most effectually are those of Merryweather and Sons, of London. These engines can remain longer neglected and out of use, without impairing their action, than any other fire-engine which we have examined; this essential property is often overlooked when the relative merits of these hydraulic machines are being compared.

Figs. 4109, 4110, are sections of one of Merryweather's improved double-cylinder steam fire-engine pumps, with doors placed at ends, so that the valves and their seatings can be drawn out in

4109.

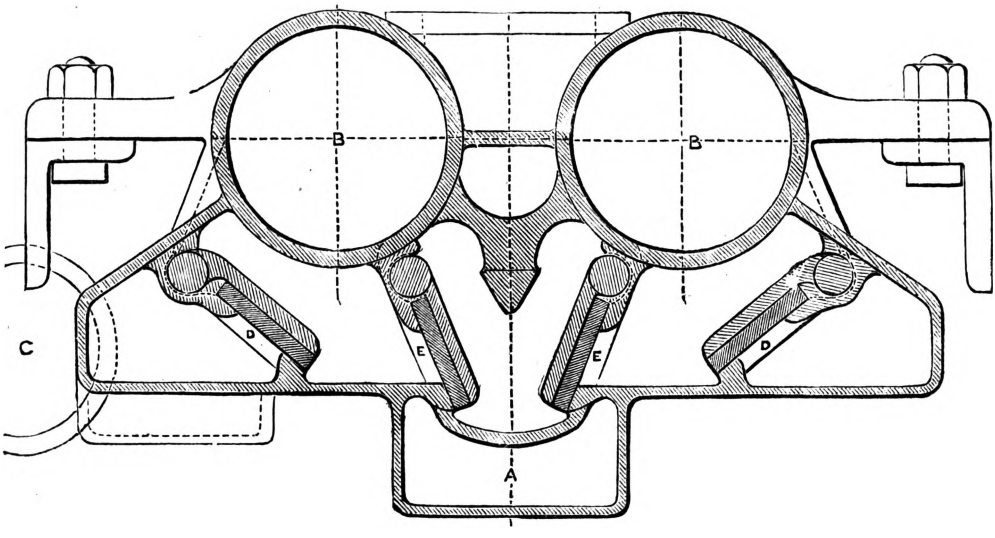

4110.

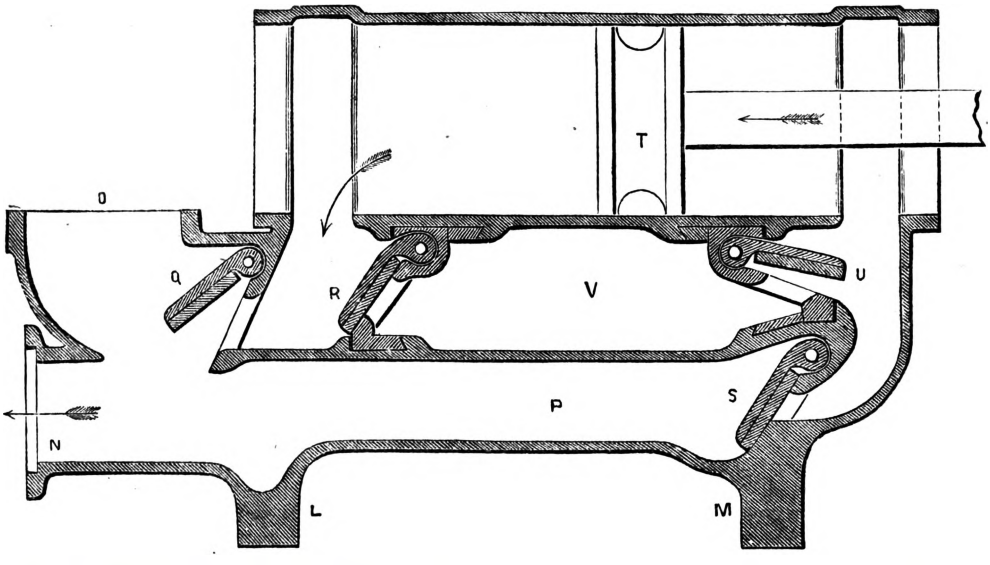

a few minutes in their entirety. The valves and water-passages are below the pump-barrels, and as the pump is entirely empty when the pump is at rest, there is no fear of its being affected by the frost. Another point of advantage in this class of pump is that the barrels will work both foul

and gritty water without injury; throughout the passages are very capacious, and being unobstructed by gratings will pass muddy water, sea-weed, or any other foreign matter that is in the water. The pistons of this class of pump are self-lubricative, and seldom want attention; this is a feature that has never before been obtained in double-acting pumps.

A, Fig. 4109, is the delivery of pump; B B, pump-barrels; C, the suction-inlet of pump; D D, the suction-valves; E E, the delivery-valves. The body of the pump is of one entire casting, and of gun-metal.

In Fig. 4108, V shows the position of the valve, of which Figs. 4109, 4110, are sections; A, Fig. 4108, is the air-vessel. The piston T, Fig. 4110, moving in the direction of the arrow, half its stroke being made; the valves U, Q, are open, and R and S closed. The valves Q, U, are closed and R, S, opened when the piston T makes its return stroke, but the delivery, through P N, is continuous and in the direction of the arrow N. O, Fig. 4110, is the passage-pipe to the air-vessel A, Fig. 4108. The valve-cover and the supports L, M, are cast in one piece. In our article, ENGINES, VARIETIES OF, p. 1430, we referred to Merryweather's valves, Figs. 4111, 4112.

4111.

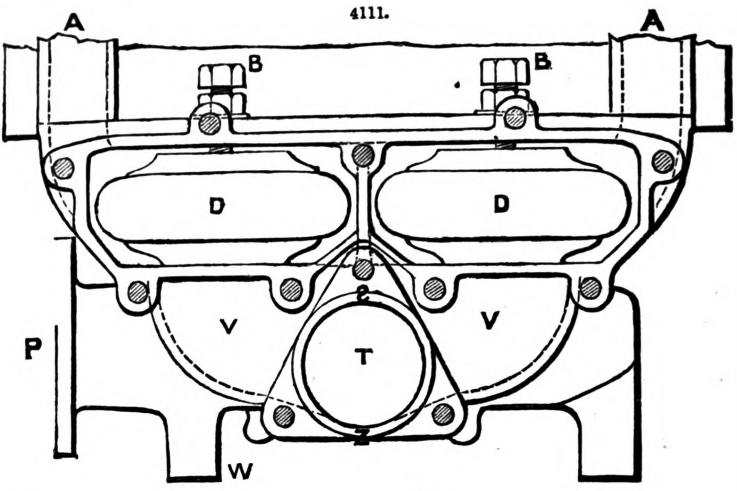

4112.

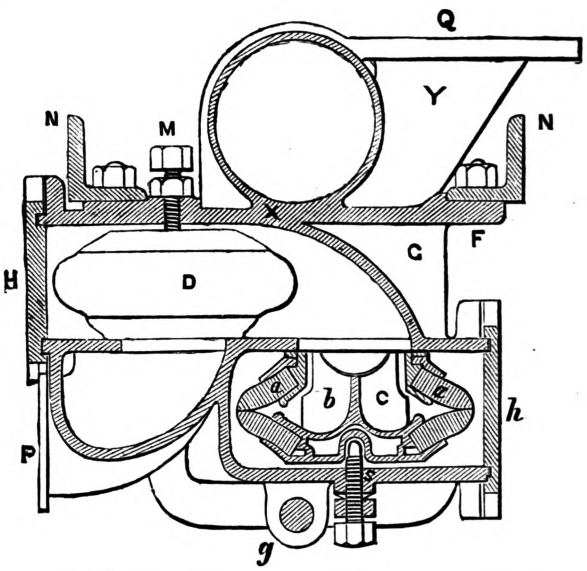

Fig. 4111. A A are the openings from the valves to pump-barrel; B B are the screws for holding the valves, and adjusting the same; D D are the disc lip suction-valves of Field; P is the discharge or outlet passage from pump; S the face of cover for side suction; T, suction-passage; V V, suction-passage leading direct to valves; W, bracket for fixing pump; Z, suction-flange.

Fig. 4112. *a*, *a*, the india-rubber disc lip-valve of Field; *b*, *c*, gun-metal guide for valve; D, suction-valves; F, flange or leg for fixing pump to frame; G, water-passage; *g*, bracket for fixing pump to frame; H, *h*, suction and delivery covers; M, the screw for holding valve, and adjusting the same; N, angle-iron frames, to which pump is bolted; P, suction-passage; Q, delivery air-vessel flange; S is same as M; X, body of the casting of pump; Y, delivery-passage.

Centrifugal Pumps, Figs. 4113 to 4121, *of John and H. A. Gwynne, of Hammersmith.*—These centrifugal pumps are very durable and mechanically complete; they are hard to be disarranged, but easily repaired.

We take the following description from the specification, 30 July, 1868, of John Gwynne and Henry Anderson Gwynne, of Hammersmith;—

The improvements in the construction of centrifugal pumps, Figs. 4113 to 4121, consist in the making of the impeller without the usual discs or side plates. This impeller J. and H. A. Gwynne prefer to make of cast steel, thus forming a much lighter and equally strong motor. This form of impeller is especially adapted to the form and construction of centrifugal pumps ordinarily made by this firm.

In order to vary the speed between that of the engine-shaft and the centrifugal pump, the inventors propose to employ a novel arrangement and construction of frictional wheels with one square or angular-shaped groove in the one and corresponding projection upon the other fitting into the aforesaid groove, the amount of friction between the wheels being regulated in the following manner;—The wheel with the square or angle-shaped groove is divided into discs, and when in working order these discs are separated from one another a short distance, and held in that position by bolts and nuts, or a traversing central nut. When from any cause it is required to vary the amount of friction between the wheels, the bolts holding these discs are tightened or slackened

accordingly; or, in other words, the lateral distance between these discs is varied. If preferred, the wheel having the projection may be similarly varied, or each wheel may have grooves and projections upon their faces alternately. There may be several such discs or grooved and beaded wheels mounted on the same shaft or shaft at any convenient distance apart. These wheels may be used for driving other descriptions of machinery, and employed for the purpose of transmitting motion.

For the purpose of condensing the exhaust steam of the engine working the pump, the inventors make the suction or delivery pipe of the pump, for a certain portion of its length, of thin metal, and enclose this length within a casing of greater diameter than the pipe, so that an annular space or chamber is formed by closing it at each end. This annular space or chamber forms a condenser for the exhaust steam from the cylinder of the engine, which, upon being caused to pass into it, is immediately condensed by contact with the cold metallic surface;—maintained cold by the circulation of the water passing through the internal pipe. An air-pump is fitted to this annular condenser in the usual manner, or this water may be removed from the condenser by having a vertical pipe leading downwards of sufficient length, a steam trap being placed at the bottom of it, or by a pipe leading into the suction-pipe of pump, a vacuum being formed by the velocity of the water. If preferred, the condensing chamber may be enlarged and the inside pipe perforated so as to condense the steam more rapidly, a combination of the water-jet and surface condensation being effected within the same vessel; or the exhaust steam may be blown directly into the discharge or suction pipe of the pump. The pipe of the centrifugal pump, where used as a condenser, may be corrugated or fluted to expose a larger surface or area, or the suction-pipe may be enlarged and two or more pipes introduced therein. This condenser or a second condenser upon another portion of the suction or delivery pipe of the centrifugal pump may be used for the purpose of condensing the steam of any other engine conveniently near, instead of, or in addition to, the driving engine employed for working the pump. This form and arrangement of surface condenser is also applicable to the pipes of any other pumps and to other hydraulic machinery, through which or by means of which a considerable current of water is produced or set in motion.

Fig. 4113 is a side elevation, and Fig. 4114 a front sectional elevation, of the disc or impeller A, which in this case has six arms B, but any other number of arms may be employed; these arms

4113.

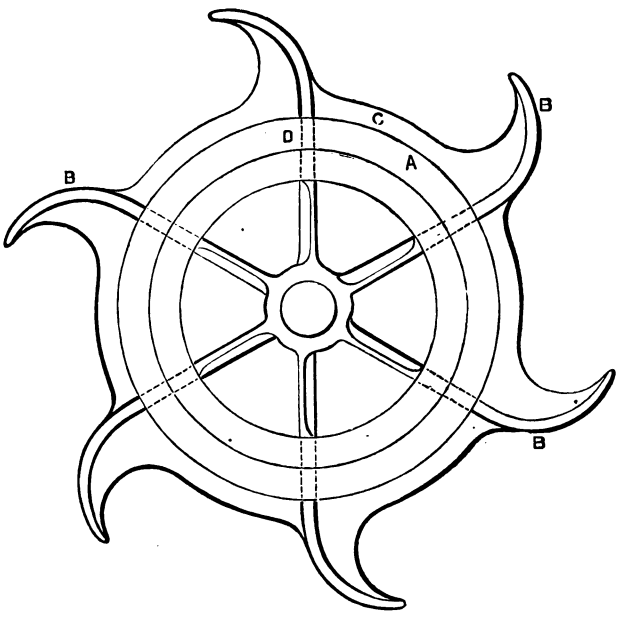

4114.

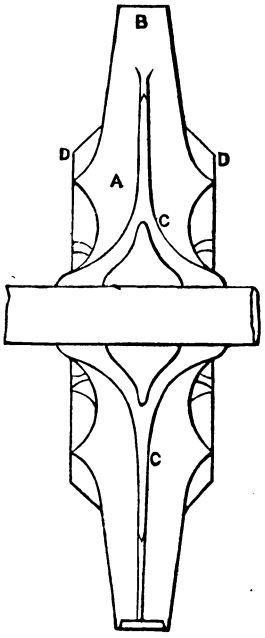

are cast in one piece with the boss. A centre plate C springs from the boss, gradually decreasing in thickness until at the termination of the radial portion of the arms, the plate finishes with a knife-edge, or as thin as practicable, the object of this plate C being to separate the currents of water upon each side of the disc without producing an eddy or reflux. The arms are radial for about two-thirds of their length, curving off towards the periphery in an opposite direction to the line of rotation. Two rings D, one at each side of the arms, form the bearing surface, and we prefer to make the entire impeller or disc of one casting. Figs. 4115, 4116, are side and front sectional elevations respectively of the pump casing E, with the impeller or disc A fitted in position; F F are the suction-passages which branch off from the suction-pipe G at the point g. To prevent any obstruction to the water this bottom part of the casing E is thinned off to a knife-edge, as shown at g, and a space is left between the passage and the case to carry the suction-pipes F F over the enlargement of the discharge-passage in a straight line to the openings in the centre of the disc A, at which point they curve into the top of these openings. The discharge-passage is sprung from the periphery of the disc in the form of a helix or volute, commencing at the top of the case e, and gradually increasing at e^{1}, e^{11}, until at e^{111} it reaches the full size of the discharge-pipe. That

part of the pump casing E which contains the impeller A is made of the same shape as the profile of the impeller, and similar in section, and of just sufficient size to permit the impeller to revolve,

4115.

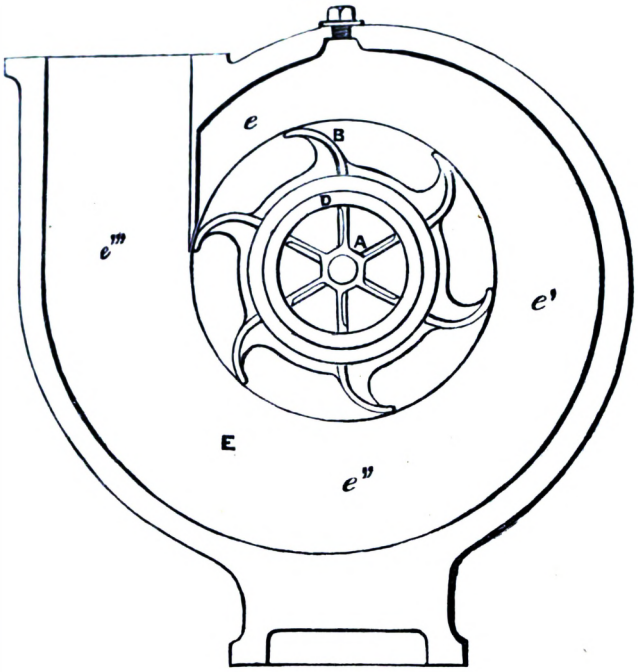

4117.

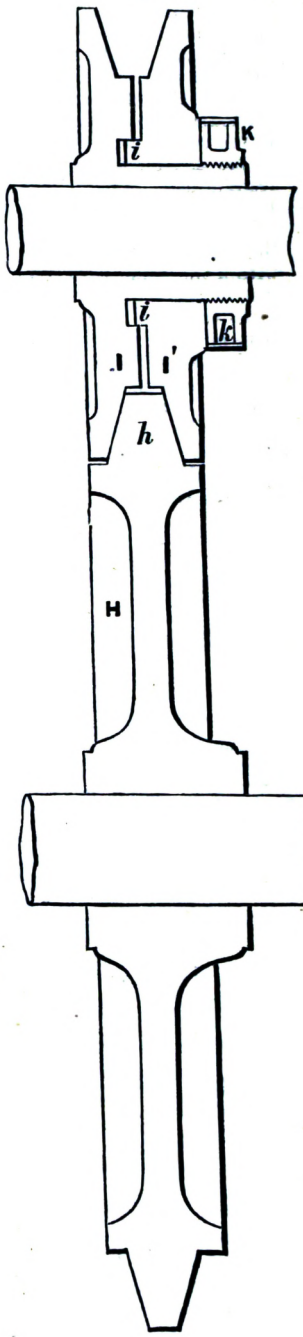

as shown in Fig. 4116, the bearing rings D being accurately fitted to the turned recesses in the casing. By this means the usual side plates on the discs of centrifugal pumps are not required, the peculiar form of the pump casing, as hereinbefore described, acting in the place of such plates, consequently the friction of the disc A is very much reduced, as the disc is accurately fitted on its spindle, and the bearing surface for the rings D, as well as the sides of the case, are carefully turned so that the arms fit, but without actual contact.

4116.

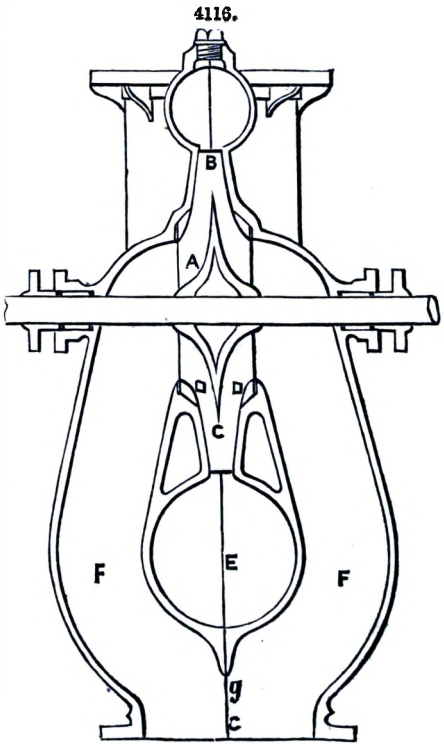

Figs. 4117, 4118, illustrate the second part of this invention, namely, an improved description of frictional gearing for driving centrifugal pumps or other machinery. Fig. 4117 is a cross-section of two wheels, or wheel and pinion, fitted according to this invention. In this case the larger wheel H has a projection *h* formed upon the periphery fitting into a recess of similar shape in the smaller wheel, or pinion, I I¹. This pinion is made in two parts or halves; one half, I, is cast solid with the boss of the pinion, this boss being turned on its outer side to receive the other half of the pinion I¹, which is accurately bored to fit the boss; the shoulder *i* is also turned to fit the recess formed upon the other half, I, of the pinion to give greater steadiness. This pinion is carried on

4118.

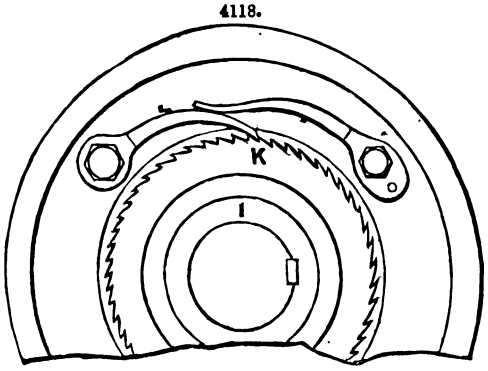

4120.

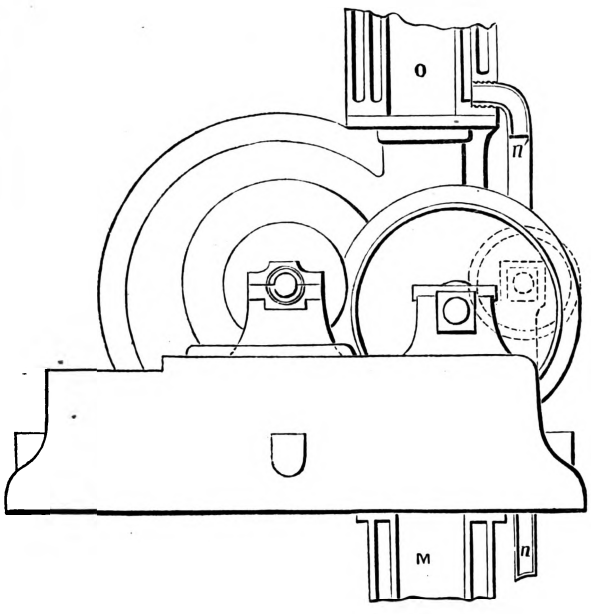

4121.

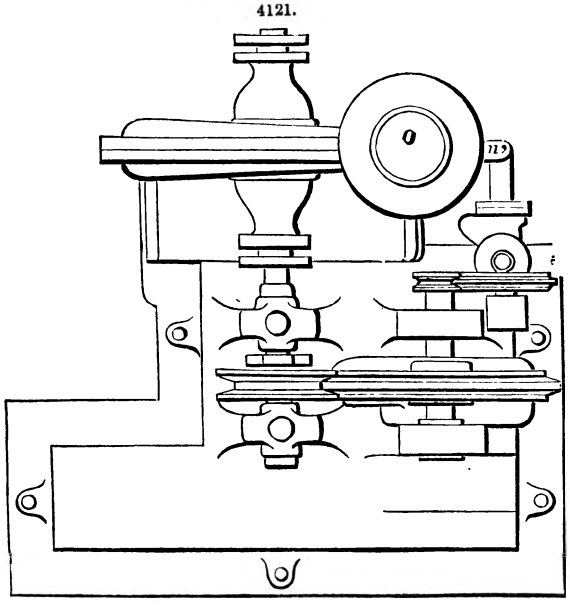

the shaft by means of one or more feathers, so that it is free to slide lengthwise upon the shaft. In order to adjust the friction between the wheel H and pinion I I^1 to any desired extent, a screw is cut upon the boss of the pinion, upon which a nut K is fitted, the inside of which bears against the half I^1 of the pinion, and consequently increases the pressure of the angular sides of the groove against the similar sides of the projection *h* upon the wheel H to any desired extent. The nut K is formed with a ratchet upon the outer edge, as shown in Fig. 4118, into which a pawl L works, and prevents the nut from slackening. This ratchet may be divided into any number of teeth, so that the nut may be held in any desired portion of a revolution, thereby obtaining great fineness of adjustment. The nut K is provided with holes *k* for the purpose of tightening or slackening it as may be necessary.

The third part of this invention is illustrated by Figs. 4119 to 4121, and consists of a novel arrangement of condensing apparatus for the purpose of condensing steam and adding to the power of the engine by bringing to the aid of the moving piston the vacuum produced by the condensation aforesaid; this is effected by utilizing the cold water passing through the suction or delivery pipe of a cold-water pump. In Figs. 4119, 4120, two

4119.

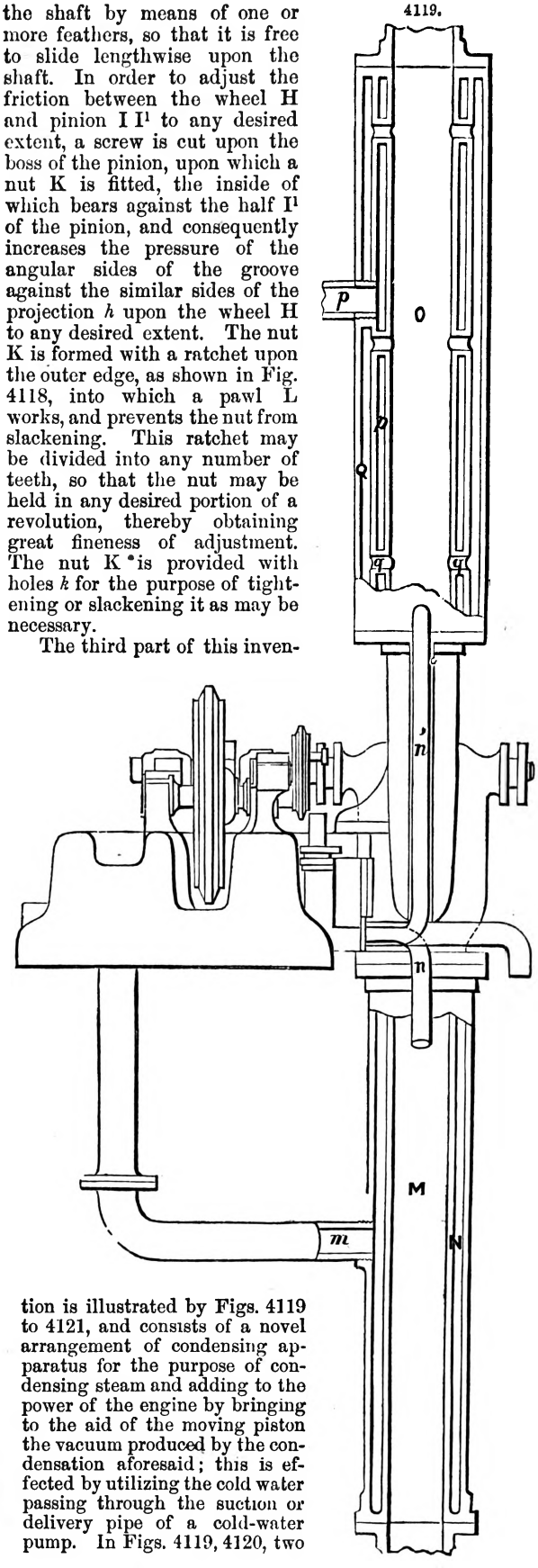

4129.

VALVE LEVER

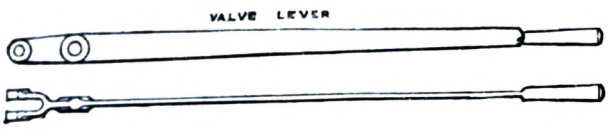

4130.

SHACKLE

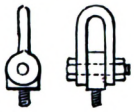

4122.

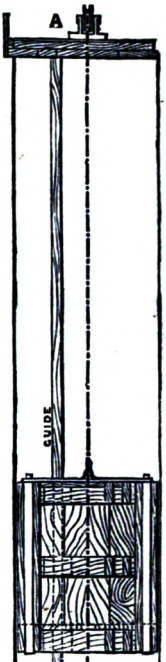

PLAN

4127.

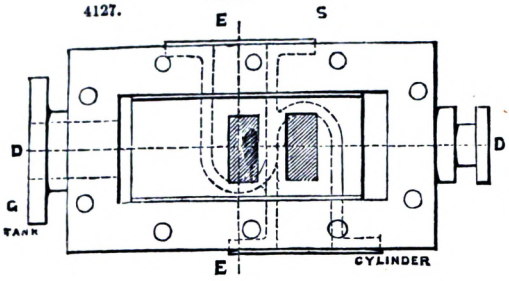

SLIDE VALVE AND CHEST

4128.

PISTON ROD GUIDE

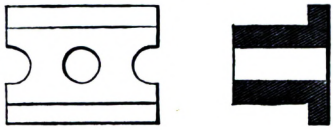

4125.

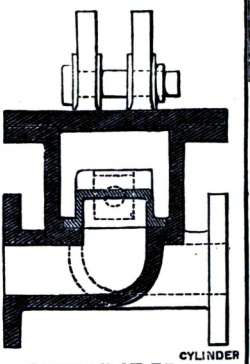

SECTION AT EE

4126.

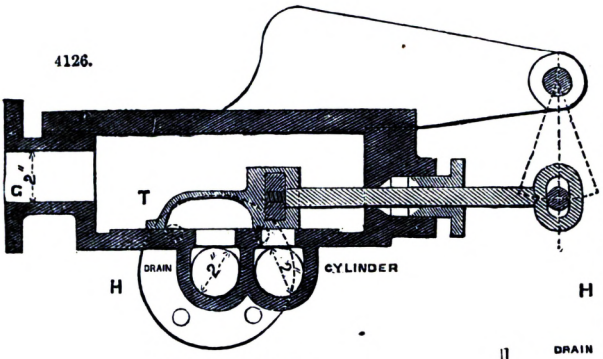

SECTION AT DD

4124.

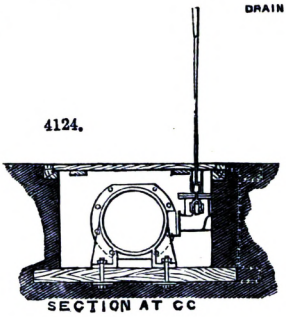

SECTION AT CC

4122.

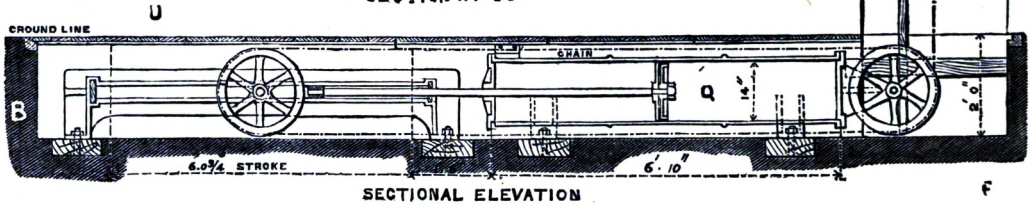

SECTIONAL ELEVATION

4123.

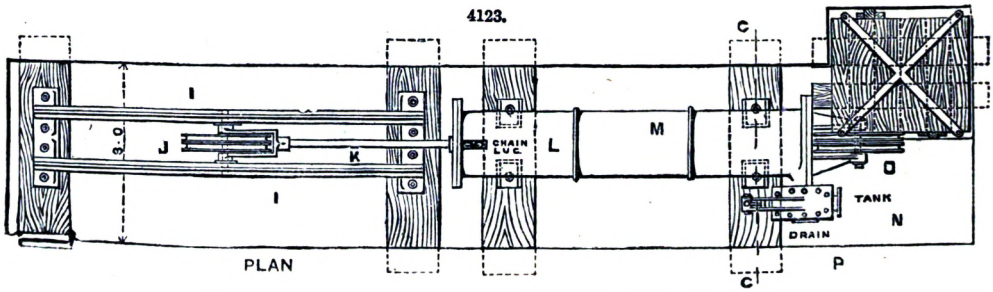

PLAN

methods of accomplishing the foregoing objects are illustrated. One of these methods consists in forming the suction-pipe of thin copper or other rapid heat-conducting metal or material for a portion of its length at M, immediately outside which another pipe or casing N is placed so much larger than the inner one M as to leave a steam space between them. The pipes are connected together so as to form a steam-tight chamber. The exhaust-steam pipe *m* from the steam-engine or from any vessel from which the steam to be condensed has to be discharged communicates with this chamber, which is kept constantly cold by the rapid circulation of the water passing through the suction-pipe M, and the steam is thereby condensed. An air-pump communicates with the chamber in this instance by means of the pipe *n*, as shown in section in Fig. 4120, for the purpose of working the condenser in the usual way. When the casing is placed sufficiently above the water level to enable the condensed water in the casing to overcome the force of gravity, or, say, more than 27 ft. of fall or height of column, the air-pump may be dispensed with, as the water will run away by its own gravity.

Another mode of applying this invention is shown at O, Figs. 4119, 4120. In this case the condenser is fitted to the delivery-pipe of the pump instead of to the suction-pipe as before, and illustrates a method of obtaining an increase of the condensing surface in a convenient way, and thereby shortening the length of pipe required for this purpose. The delivery-pipe O has two casings or pipes P Q fitted around it in a similar manner to that just described with respect to each other. To the inner chamber P the exhaust steam pipe *p* communicates, while the water in the delivery-pipe O is permitted to circulate freely in the outer chamber Q through the openings *q*. By this means both the inside and outside of the exhaust-chamber P is cooled by the water raised by the pump and discharged therefrom, and consequently the condenser may be made much shorter. The air-pump is in this case worked similarly to that above described, through the pump n^1. This double casing may be applied to the suction-pipe of a pump, and similarly the single casing may be applied to the delivery-pipe of a pump should it be preferred or found more convenient.

Hydraulic Lift of Alfred Davis, Sun Foundry, Leeds.—The annexed illustrations, Figs. 4122 to 4130, show a very simple and effective form of hydraulic lift, designed and constructed by Alfred Davis, of the firm of Hathorn, Davis, and Campbell. This hydraulic lift has been working for some time, and continues to work, in a most satisfactory manner.

The cylinder is fixed horizontally, and the stroke multiplied by means of pulleys, which at one end revolve in a bracket cast upon cylinder cover, and at the other work in a cast-iron cross-head, keyed to the piston-rod, and guided upon either side.

A chain is led round the pulleys running longitudinally over and under the cylinder, and after passing over the wheel A at the top of shaft, descends to the cage. The supply is drawn from a tank, and is admitted to the cylinder by means of a slide-valve worked with an ordinary lever, which serves the purpose of lifting, lowering, and regulating the speed of the cage.

This lift is single-acting, water being admitted on one side of the piston only; the weight of the cage being made sufficient to accomplish the down stroke. The water, having done duty in the cylinder, is allowed either to flow into the drain or run into a low-level tank to be used for other purposes.

The entire apparatus, with the exception of the cage and its immediate appendages, is enclosed and fixed in a trench below the ground level, and completely boarded over, so that space available for other purposes may not be lost; at the same time, care has been taken that every part shall be easy of access should the parts require inspection.

B, U, Q, F, R, A, Fig. 4122, is a sectional elevation. Q, piston; R, cage, of Davis' hydraulic lift.

I, J, K, L, M, Fig. 4123, is a plan. I, cross-head guide; J, pulleys; K, piston-rod; L, chain lug; M, cylinder.

Fig. 4124 is a section at C C of Fig. 4123.

H, Fig. 4125, is a section at E E of Fig. 4127. H, low-level tank or drain.

G, H, I, Fig. 4126, is a section at D D of Fig. 4127. G, supply tank; H, low-level tank or drain; I, slide-valve.

G, S, Fig. 4127, is a plan. G, supply tank; S, drain or low-level tank.

Fig. 4128 is of the piston-rod guide.

Fig. 4129 is of the valve-lever.

Fig. 4130 is of the shackle.

Armstrong's method of transmitting power by water pressure. Taken from the Proceedings Inst. M. E., 1868.—The most distinctive feature in this mode of transmitting power is the apparatus termed the *accumulator*, shown in Fig. 4131, which is so named because it accumulates the power exerted by the engine in charging it. It consists of a large cast-iron cylinder A, fitted with a plunger B, from which a loaded weight-case C C is suspended, to give pressure to the water pumped in by the engine. The accumulator is in fact a reservoir giving pressure by load instead of by elevation; and its purpose is to equalize the strain upon the engine in cases where the quantity of power to be supplied is subject to great and sudden variations. The load upon the plunger of the accumulator is generally such as to produce a pressure equal to that of a column of water 1500 ft. high, and the capacity of the cylinder is sufficient to contain the largest quantity of water which can be drawn from it at once by the simultaneous action of all the machines in connection with it. The accumulator also serves as a regulator to the engine, for when the plunger rises to a certain height it begins to close a throttle-valve in the steam-pipe, so as gradually to lessen the speed of the engine until the descent of the loaded plunger again calls for an increased production of power. From the accumulator the water is conveyed by a pipe to the various places where motive power is required; and in some cases where water is scarce it is returned by another pipe from the machines to the pumping engine to be again forced into the accumulator. The water thus acts merely as a carrier of power, and its function is consequently

the same as that of shafting used for conveying the power of a steam-engine to different parts of an establishment.

The question therefore to be considered is, in what respect or under what circumstances water pressure is superior to shafting for the transmission of power. It is not to be supposed that water pressure would be applicable as a substitute for shafting in mills and workshops where the machines to be driven are compactly grouped at short distances from the engine, and where they are generally continuous in their action. The superiority of water pressure is only realized in those instances where the machines to be put in motion are scattered over a wide area and are intermittent in their action, and also where the quantity of power to be transmitted is subject to great and abrupt variations. Upon an extended wharf, for example, every crane may happen to be in action at one moment, while at another time not one may be moving; and if shafting were used in such a case for conveying power to the cranes, the engine would sometimes be overtaxed and sometimes acting without any useful effect. But with water pressure as the medium of transmission, the variation of work is met by the accumulator; and the engine acts always under a uniform load, storing up its surplus power at times when the whole is not transmitted. Moreover, the ramifications readily carried out in laying water-pipes are not practicable with shafting, nor can shafting be extended beyond very limited distances.

4131.

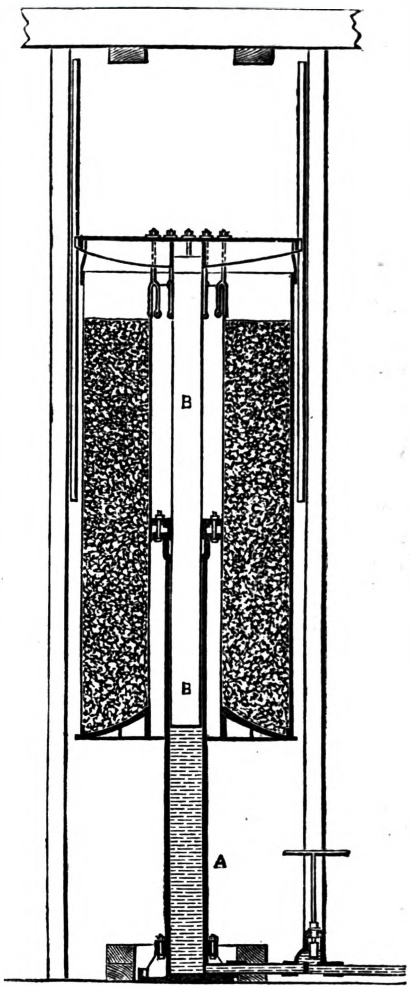

Water pressure also possesses the advantage of communicating to machinery a much more controllable and adjustable motion than shafting. The water can be gradually turned on or shut off, and can be admitted as quickly or as slowly as may be desired; while with a shaft the motion acquired is sudden and cannot be communicated gradually. Another advantage of the hydraulic system is that the pipe conveying the water is itself at rest, and does not suffer any appreciable wear nor require any attention; whereas a shaft being in motion is attended with friction and consequent wear, and involves constant lubrication.

The absence of elasticity in water gives great steadiness and precision to the movements of machines actuated by water pressure; but on the other hand, water being incapable of expanding like steam in a cylinder, the quantity expended is not proportionate to the load. Thus a machine propelled by hydraulic pressure measures off the same quantity of water, whatever may be the resistance overcome; and therefore when the machine is inadequately loaded the expenditure is more than equivalent to the effect produced. This loss of power may in a great measure be obviated by making the machines with variable powers; but the simplicity of single-power machines renders them preferable in many cases, notwithstanding their greater expenditure of power. In fact, for the purposes to which water pressure is most usually applied, safety, simplicity, and general convenience are more to be considered than economy of power, because owing to the intermittent character of the work the required quantity of power is not large in the aggregate. It has also to be recollected that, although power is sacrificed by that very property in water which gives so much steadiness and safety to its action, yet the favourable condition under which a steam-engine works when pumping against a constant head, as in charging an accumulator, cheapens the production of the power, and compensates for its more lavish application.

In connection with the non-elastic character of water, it will be observed that its incompressibility in the cylinder of the machines would, if not provided against, cause very injurious shocks and strains to the machinery, by suddenly arresting the momentum of the moving parts on the closing of the outlet passages. To obviate this liability, nearly all varieties of water-pressure machines adapted for rapid action require the introduction of what are termed relief valves. These will be fully described in our article on VALVES: and it is therefore only necessary on this occasion to describe them as consisting of small clacks D D, as shown in Fig. 4132, opening against the pressure P in the supply-pipes, and yielding to any back pressure on the piston that exceeds the accumulator pressure. In the drawing P P represents the pressure, and E E the exhaust-passages.

With a pressure equal to a column of water 1500 ft. high, the loss of head by friction in the pipes forms a very inconsiderable deduction from the entire column; and the pressure may therefore be conveyed without any serious sacrifice to great distances from the engine. In some instances the length of the pressure pipes has been extended to more than two miles without any apparent decrease of effect; but in all cases where the pipe is very long it is desirable to apply an accumulator at each extremity, in order to charge the pipe from both ends. The most advantageous

pressure of water for practical use seems to be that mentioned above, namely, 1500 ft. or about 700 lbs. a square inch. By increasing the pressure the size of the pipes and of all parts of the apparatus is lessened; but on exceeding the above limit a difficulty begins to be felt in preventing leakage and keeping the valves and packings in order; and this objection more than counterbalances the advantage of reducing the size of the apparatus.

4132.

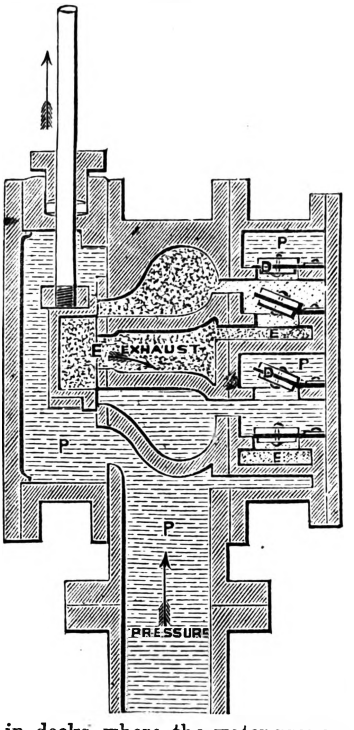

Compressed air has often been proposed, and in some instances tried, as a medium for the transmission of power. Being elastic it has an advantage over water in accommodating its volume and consequently its expenditure to the load on the piston; but on the other hand it does not give back all the power put into it by the engine, because practically it cannot be used expansively to the full extent of its previous compression. In order to return all its acquired power, the air must undergo no throttling, and must be discharged from the cylinder in which it acts at the density of the atmosphere; and as these conditions are impracticable, the loss from elasticity in air is probably as great as that from the absence of elasticity in water. But the use of compressed air is subject to a far more serious source of waste by leakage, which in the case of air is very difficult to detect; and in an extended system of pipes and machines, requiring a multitude of joints, valves, and fitting surfaces, the leakage of the air must form an insurmountable difficulty. Moreover, the elasticity of air deprives the machines to which it is applied of that perfect steadiness and precision which is afforded by the incompressibility of water. Nor is any advantage to be gained by adopting the converse process of exhausting the air instead of compressing it, since the difficulties which apply to the one case are equally incident to the other.

The purposes to which water pressure has been applied as a means of transmitting power are numerous; in fact in almost every case where manual labour is used as a mere motive power it may be superseded by engine power transmitted by means of water pressure. The widest application of this system is in docks, where the water-pressure machinery is now most extensively used in England for the purpose of opening and closing the gates, swing bridges, and sluices, and also for hauling ships through the locks and discharging and warehousing cargoes. It is also very generally employed in the various operations connected with the shipment and discharge of coal; and the mechanical arrangements applied to meet the different conditions under which these operations have to be performed are very various, and in some cases necessarily very elaborate. Perhaps the case of greatest novelty in this branch of the application of water pressure is that of a machine erected for the purpose of shipping coals at Goole Docks, on the river Humber, where barges containing 32 tons of coal are floated into a cradle, and then lifted bodily to a considerable height and turned over into a shoot, which delivers the coal into a ship alongside.

In France it is in use at Marseilles, at Rouen, and at the goods station of the Paris and Lyons Railway in Paris, for the purpose of loading and unloading the wagons, and also for hauling them in the station yard. The machinery at this station affords a good example of the application of the principle to railway goods traffic, and may therefore be selected for description.

The machines comprise fifteen single-power hydraulic platform cranes to lift 1½ ton; and three double-power similar cranes to lift 1½ ton with the lower power, and 3 tons with the higher power; also two hydraulic engines for driving capstan-heads for hauling trucks.

The single-power cranes are represented in Figs. 4133, 4134. They are adapted to turn as well as to lift and lower by the water pressure. The jib is a fixture to the crane-pillar A, which is made to revolve by means of a chain passing round the cupped wheel B, and worked by a pair of hydraulic presses C C. The diameter of the ram of each turning press C is 4 in., and the length of stroke is 3 ft. 8 in., which is doubled by passing the chain over a pulley at the end of the ram and fixing the extremity to the cylinder. The ram of the lifting press D is 5¾ in. diameter, and has a stroke of 4 ft. 8 in., and the motion is multiplied four times by means of pulleys. The chain is conveyed upwards through the centre of the pillar A, and thence over the end of the jib. The lifting cylinder D is placed at an angle, to facilitate the overhauling of the chain. The valves for lifting, and lowering, and for turning, are slide-valves, the lifting and lowering valve having two ports, and the turning valve three ports. Each valve is worked by a lever E passing through the platform, the two levers being placed at a proper distance apart, so as to be worked by a man standing between them with a hand on each lever. To provide against the crane-jib slewing round beyond the range of the turning presses, the turning valve is made to close by a self-acting arrangement at each extremity of the range.

The double-power crane is of the same general construction as the single-power: but instead of a simple hydraulic press with ram for lifting, a bored cylinder with a combined ram and piston is applied, as shown in Figs. 4135, 4136. For the lower power the pressure is admitted upon both sides of the piston A, and therefore virtually acts only upon the ram B, which is half the area of the piston. For the higher power the front side of the piston is open to the exhaust E, leaving the pressure P to act on the back only, and the effect is then proportionate to the area of the piston,

which is twice that of the ram. This alternative action is determined by the intervention of an extra valve C, Figs. 4135 and 4137; when this valve is opened, as shown in Fig. 4137, the pressure

4133.

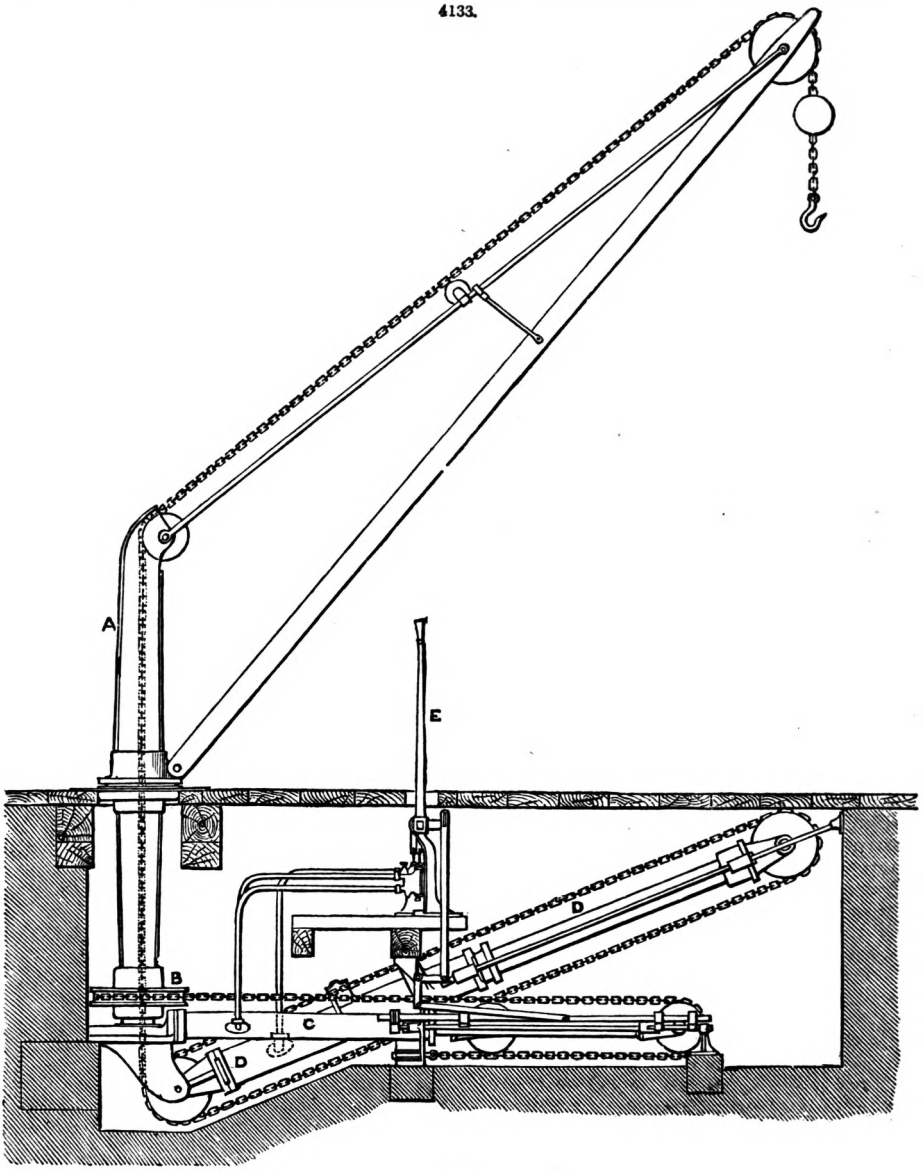

4134.

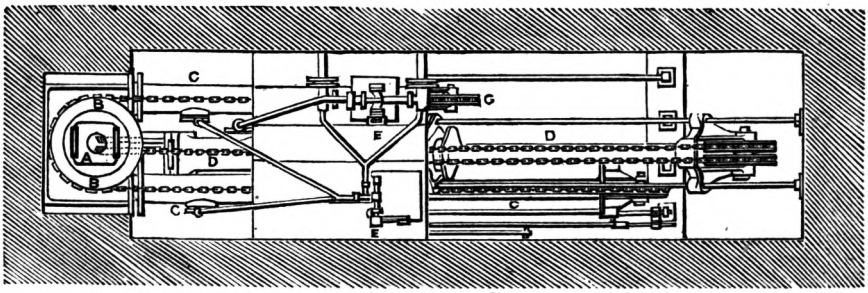

P has access to both sides of the piston, and the lower power is then obtained; while for the higher power the valve C is closed, and the exhaust-valve D is opened, whereby the front side of the piston is kept constantly open to the exhaust E. In cases where three powers are required, three

simple hydraulic presses are commonly used, which act either singly or in combination; but the same effect may be obtained with a bored cylinder and piston combined with two concentric rams,

4136.

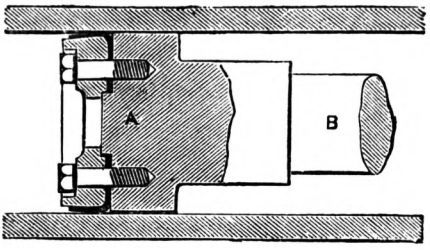

the external ram being secured by a pawl when its action is not required, and the internal ram acting through a water-tight gland in the outer ram. In this case the lowest power is obtained by admitting the water only on the front side of the piston, whence it enters into the interior of the larger ram through a hole near the piston, and forces out the inner or smaller ram. The second power is obtained by admitting the water to both sides of the piston; and the highest power is brought into action by opening the front side of the piston to the exhaust, while the pressure operates on the back of the piston.

The capstan engines used at this railway station have each two oscillating cylinders with combined rams and pistons, working cranks at right angles; on the front side of the piston, which is half the entire area, the pressure is constant, and the back communicates alternately with the pressure and the exhaust. The engine therefore acts by a difference of pressure in one direction, and by a positive pressure in the other, the effective pressure being equal in both cases; and the action is governed by a two-port slide-valve worked direct from the trunnion. In these engines, as well as in the cranes, relief valves are applied to prevent concussion from the water shut in.

Since the platform cranes of the Paris and Lyons Railway were constructed, a new arrangement of platform crane has been introduced, in which the lifting cylinder is arranged so as to form the crane-pillar. An example of this kind of crane is shown in Fig. 4138, where A is the lifting ram acting upon a chain B, which gives a twofold motion to a double-pulley running block C. A corresponding double-pulley block D is fixed to the base of the jib, and over these pulleys the lifting chain passes four times, so that the range of the ram is multiplied altogether eight times at the outer end of the chain.

4135.

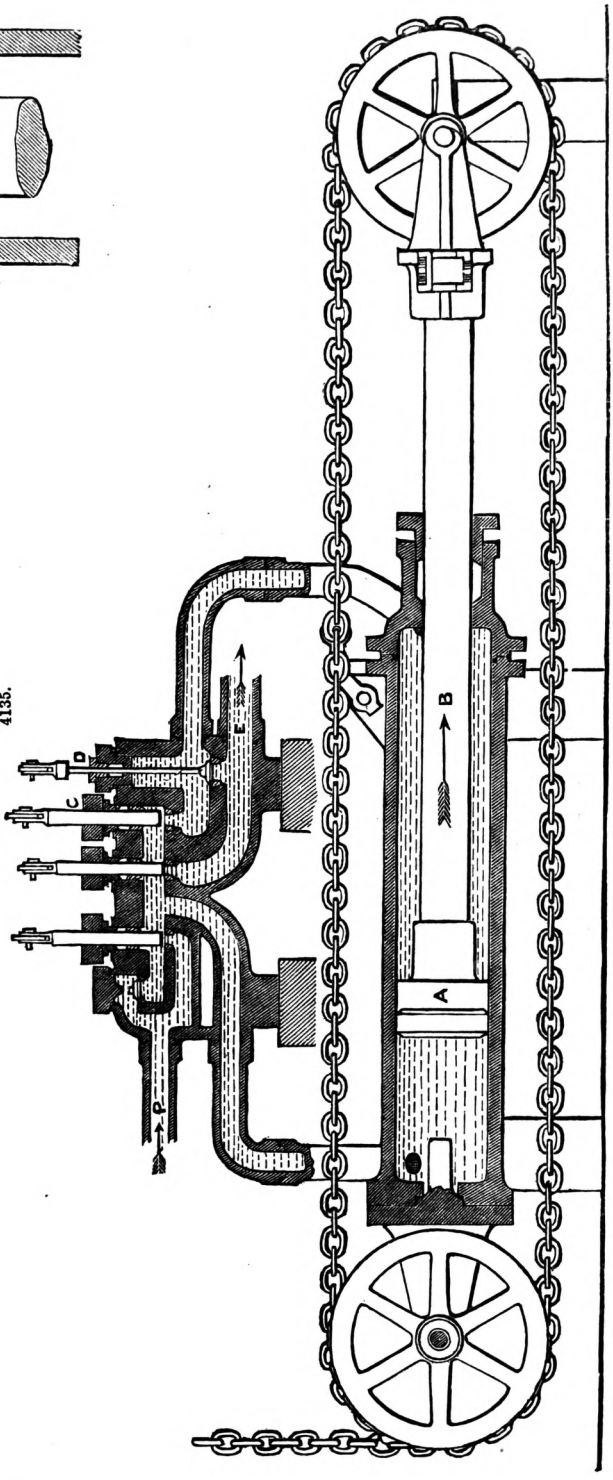

Another modification of the same kind of arrangement is exhibited in Figs. 4139, 4140, where the crane-pillar is carried in top and bottom bearings, and the lifting press A is placed between

he two cheeks of the pillar. In this case there is no turning power, and the lifting valve B, as well as the press, is attached to the crane-pillar, as shown to a larger scale in the section, Fig. 4141.

4137.

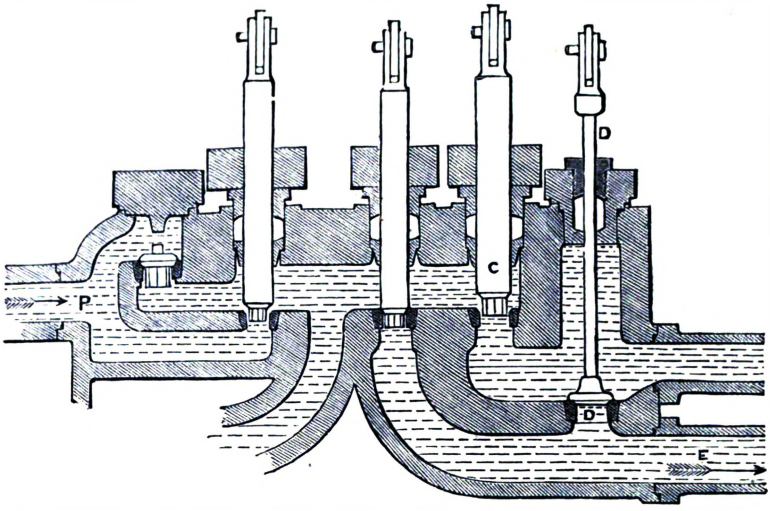

This is the simplest and cheapest form of hydraulic crane which is made. In all cases of cranes containing the lifting press in the pillar, the water is admitted through the pivot at the bottom, which is made water-tight by means of a cupped leather. For cranes of a very high power, where only slow motions are required, it is now usual to employ the ordinary gearing of a steam-crane, and to apply the water pressure by means of a small hydraulic engine fixed in the framework of the crane.

Hydraulic cranes have of late years been introduced with great advantage at the Elswick Works, both in the forge and in the foundry. In the forge they are applied to the service of a 12-ton hammer, and by this means forgings ranging in weight up to 20 tons are manipulated under the hammer with perfect precision and great saving of time and labour. In the foundry they are so applied as to command every part of the floor, and thus wholly to supersede manual labour for every purpose of lifting and carrying. The form of crane used in each of these departments is the same, and is represented in Figs. 4142, 4143. The jib and pillar of the crane are of wrought iron, and revolve in top and bottom bearings. The crane has three motions, namely, lifting, turning, and traversing, all of which are effected by hydraulic power. The lifting cylinder A is made of double power by the ram and piston arrangement before described, the highest power being equal to 20 tons; the ram is 11 in. diameter, and the piston 15½ in. diameter, the length of stroke being 6 ft. 8 in. The turning cylinders B are applied in the usual manner at the foot of the crane-pillar, the rams being each 4¼ in. diameter, with 5-ft. stroke; and both the lifting and the turning cylinders, with their valves, are fixed in a chamber beneath the level of the floor. A three-port slide-valve is used for the two turning cylinders, and mitre-valves for the lifting cylinder. The chain from the lifting cylinder is carried upwards through the crane-pillar, bending over a sheave C at the top of the pillar, and passes successively over the pulleys of the travelling carriage D and the running block E, and is finally made fast at the extremity F of the jib. For the purpose of overhauling the ram of the lifting press, a small press is placed between the two turning presses B; and the overhauling action is effected by a chain and sheaves multiplying four times, the outer end of the chain being attached to the sliding head of the lifting ram at I. The pressure in the overhauling press is constant, and its action is therefore equivalent to that of a counterweight; the ram is 4½ in. diameter, with 3 ft. 5 in. stroke. For effecting the traversing motion of the load suspended at the hook G, the travelling carriage D is hauled inwards and outwards by two presses H fixed to the back of the crane-pillar, and connected by chains with the travelling carriage; the ram of each press is 5½ in. diameter, with 4 ft. 7 in. stroke. The alternating action of these presses, which is precisely the same as that of the presses B used for the turning motion, is regulated by a three-port slide-valve K attached to the front of the pillar, with a lever at each side for working it. The water is supplied to, and discharged from, these presses by two pipes which pass through the top bearing of the pillar, and the connection between the valve and these pipes is effected in each case by a trunnion joint at J J.

Another novel purpose to which hydraulic pressure has recently been applied is the raising of the materials required for feeding blast furnaces. The great increase in the height, size, and productive power of modern blast furnaces has necessitated a great increase of speed and power in the lift; and the employment of water-pressure machines has fully satisfied these requirements. The apparatus employed for this purpose is represented in Fig. 4144. The framework of the hoist is constructed of cast-iron columns supported by wrought-iron bracing. Two guided cages A A are used for receiving the barrows containing the materials to be raised to the furnace mouth; and two separate lifting-presses B B, one for each cage, are fixed in an inverted position against opposite sides of the framing, the ram of each press being 11½ in. diameter with a stroke of 8 ft. The lifting chain makes five turns over the pulleys C C of each press, so as to multiply the stroke tenfold, and is carried up over a sheave D at the top of the framing, and thence descends to the cage

to which it is attached. The two cages are connected with each other by a wire rope which passes over a sheave E at the top of the framework, so that they balance each other, the one being lowered

4138.

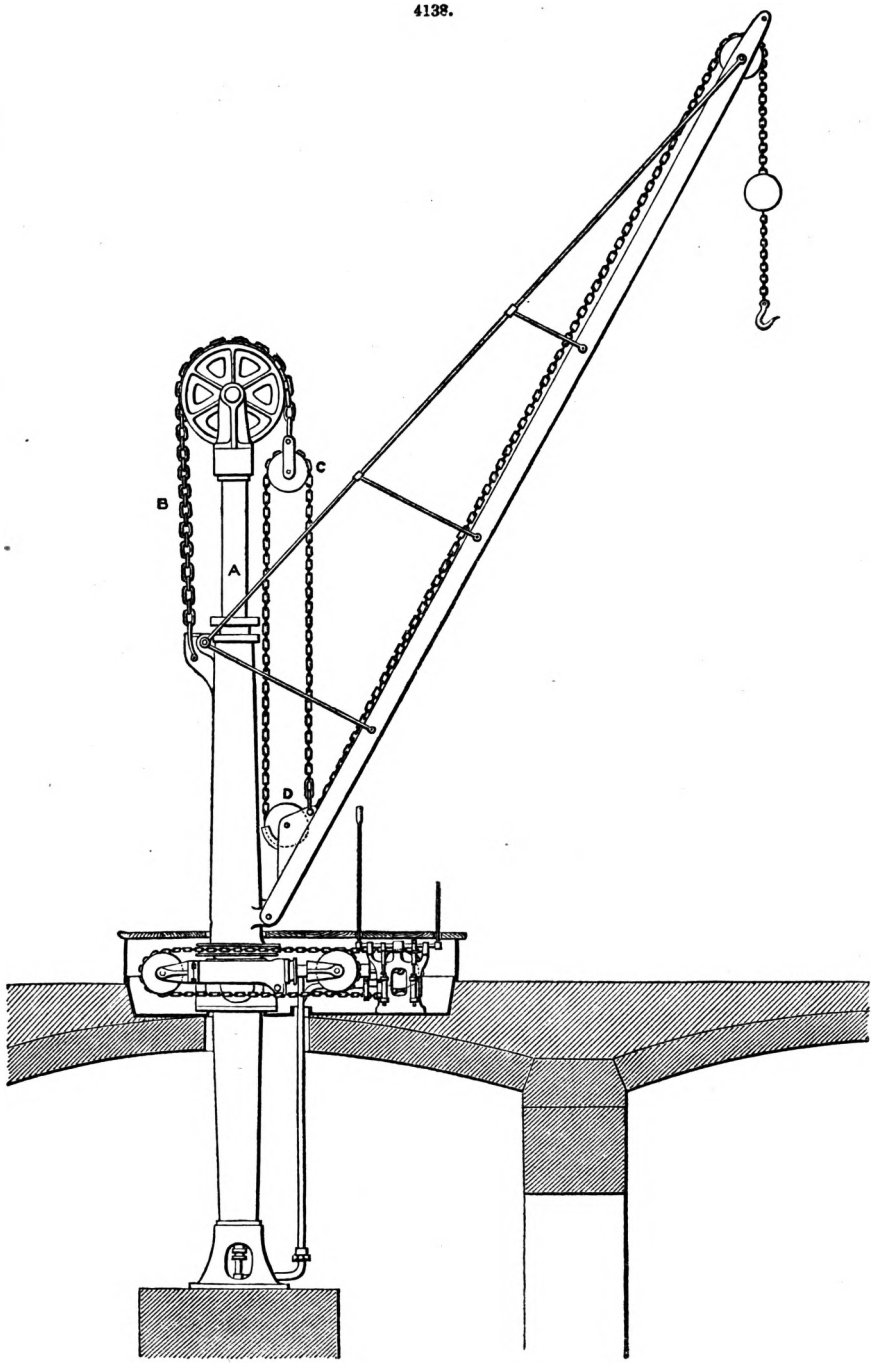

while the other is raised. The cages lift two barrows at a time, weighing with their contents 1½ ton, and they are hoisted to the top at the rate of 4 ft. a second; a much higher speed could be attained by increasing the size of the valves and pipes to the required extent. A three-port slide-valve is used for working the two presses, and admits the water to the one press while it discharges it from the other. The valve is worked at the bottom, but a rope is provided to enable it to be worked from the top as well. An arrangement is applied by which the cages gradually close the valve at the termination of each lift, and thereby ensure a soft and gradual cessation of the motion; and a safety apparatus is attached to each cage, to arrest its fall by gripping the guide bars in the event of the breakage of a chain.

When this paper was read, R. Mallet observed that it was a remarkable circumstance that Bramah, the inventor of the hydraulic press, had suggested as early as 1802 the application of the

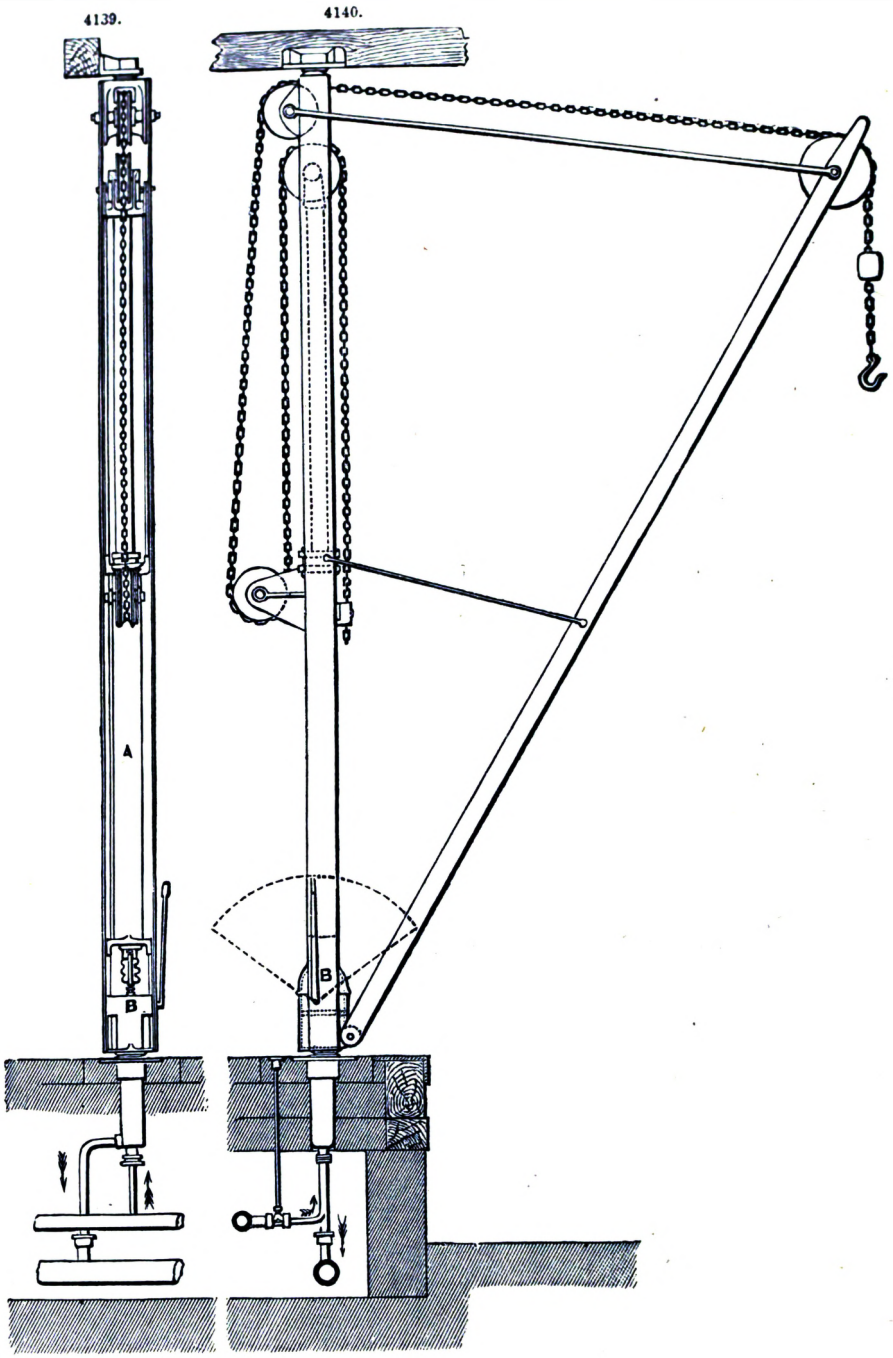

same principle for working the cranes on the dock quays at Dublin and in the warehouses of the London Docks, as was shown by the accompanying autograph letter. Extract from autograph letter of Joseph Bramah to Robert Mallet, dated London, 10th Nov. 1802, the original of which was shown to the meeting;—"I have also now applied it" (the hydraulic press) "with the most surprising effect to every sort of crane for raising and lowering goods in and out of warehouses. So complete is the device, that I will engage to erect a steam-engine in any part of Dublin, and from it convey motion and power to all the cranes on the keys and elsewhere, by which goods of any weight may be raised at one-third of the usual cost. This I do by the simple communication of a pipe, just the same as I should do to supply such premises

with water. I have a crane on my own premises which astonishes every person to whom it has been shown, as they see the goods ascend and descend fifteen or twenty times in a minute to the height of 18 or 20 ft., and at the same time it is impossible for any person unacquainted with the principle to discover how or where the power comes from." This showed that Bramah had distinctly seen the great scope for future expansion of the principle; but he had been too much in advance of the time for his ideas to be practically developed during his lifetime to so great an extent as they had since been by the very ingenious and perfect arrangements of Sir William Armstrong described in the paper now read.

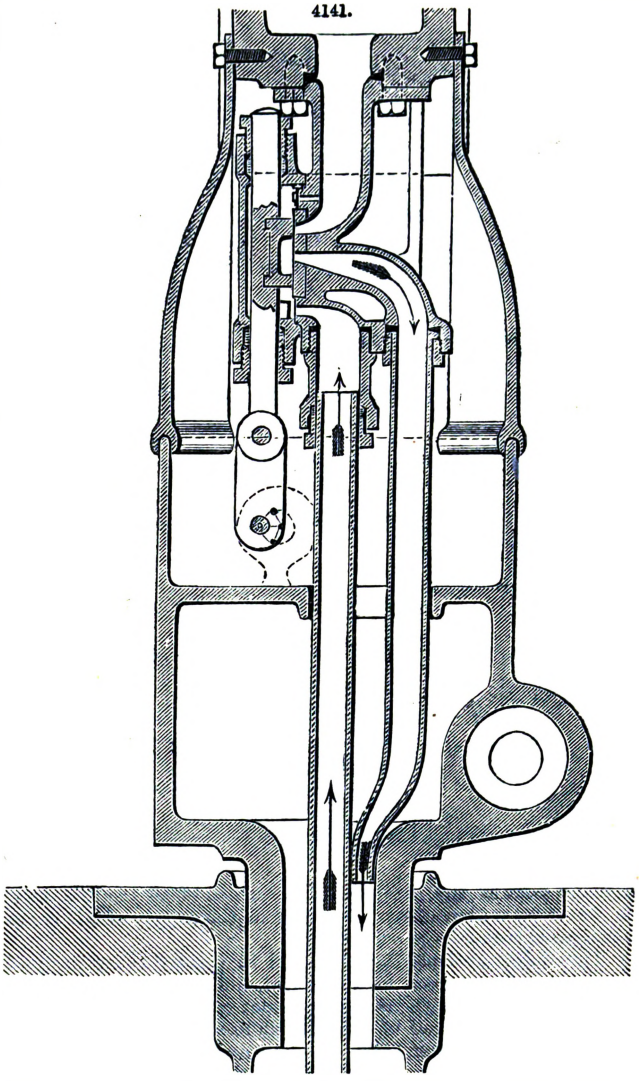

Hydraulic Rams.—The hydraulic ram, the principle and mode of action of which every engineer is acquainted with, is employed solely for the purpose of raising water. See Fig. 93, p. 35. It may therefore be classed among pumps; but as it utilizes for this purpose a volume of water falling from a certain height, that is, a fall of water, it must also be considered as a *hydraulic motor.*

We shall not describe here the classic ram of Montgolfier, with which everybody is acquainted: but we will at once examine the improved ram by M. Bolée, of Le Mans, which was exhibited in Paris in 1867. This ram, represented as a whole and in detail in Figs. 4145 to 4153, is nothing but Montgolfier's ram provided with certain details which give it a regular and permanent action and enable it to work without being constantly attended to.

The motive water arrives through the pipe A, and the water raised is forced into the reservoir of air D, whence it flows up the ascension-pipe. When the ram is not at work, the valve B is let down; it would allow a passage to the water if care were not taken to place a hatch at the head of the conduit which brings the water to the body A of the ram. Suppose this hatch opened, the water puts itself in motion in the conduit, and the ram begins its action, presenting successively and periodically the three following phases:—

First phase.—The water that arrives through the inlet-pipe begins to flow with a velocity due to the height of the fall, through the valve B (which is let down), and through the spaces between the four arms *t* of the upper guide of this valve, Fig. 4148; but the flow of the water and the pressure exerted by it while in motion upon the lower face of the valve, causes this latter to close, and the issue of the water ceases.

Second phase.—At the moment when the issue of the water ceases, the *vis viva* possessed by the column of water in motion causes the *ramming stroke*, that is, opens the retaining (or forcing) valve G; the water enters the air-vessel D, and at the same time, in consequence of the effect of the shock upon the valve G, and in virtue of its elasticity, flows back through A.

Third phase.—At the moment when the backward motion begins, the valve G closes and B opens, again allowing a passage to the water coming from the upper water-course; then the three phases begin over again.

Having explained the action of the ram, we have only to describe the details of its construction.

The valve B is partly balanced by a counterpoise *e*, to which it is connected by means of a rod *b*. The effect of this addition, which does not exist in Montgolfier's ram, is to make the valve B close more readily. The lower rod of this valve is guided, as shown in Fig. 4148, in a little cylinder with two lateral openings, the bottom of which is furnished with india-rubber washers. Consequently the valve on falling strikes easily and noiselessly against its lower stop.

To ensure the proper action of the ram, and to prevent a breakage either in the inlet or in the

outlet pipes, an indispensable condition is that the reservoir D constantly contain a sufficient quantity of air. But in Montgolfier's common ram the reservoir is supplied by a *snifting valve* placed

4142.

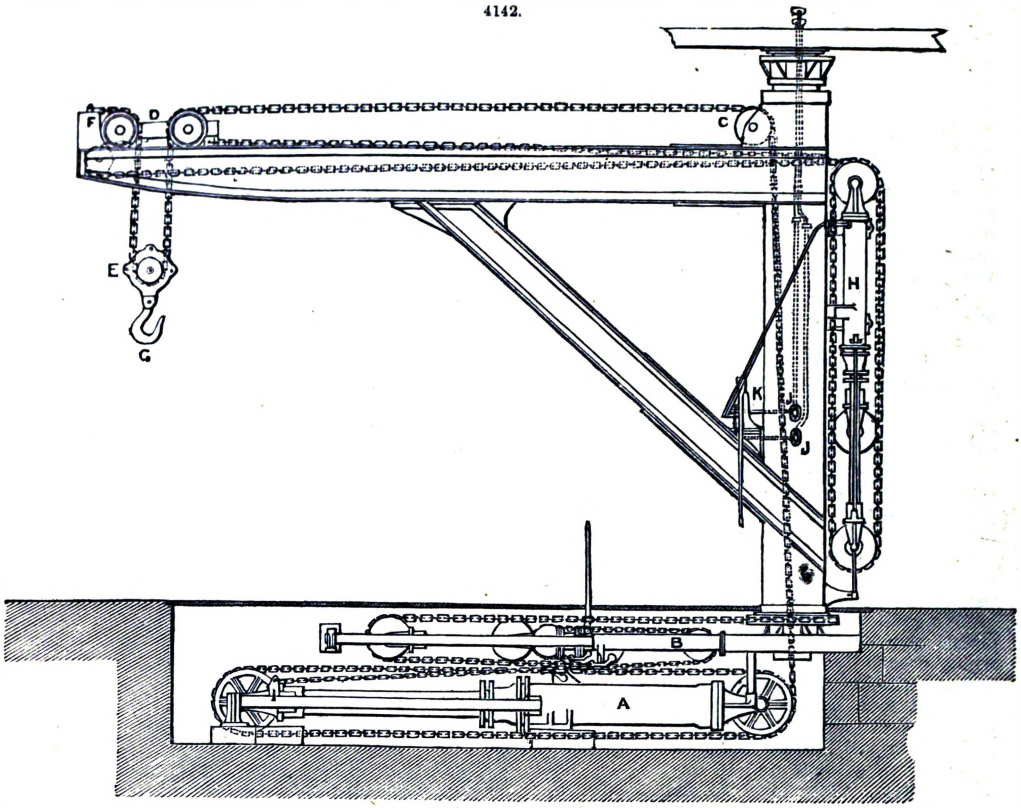

upon the body of the ram: the consequence of this is that in wet seasons the water rises above this valve, and as the supply of air is cut off, there is danger of a breakage occurring.

This defect M. Bolée has removed in the following way;—In front of the valve B he places a long, vertical, hollow column *e*, Figs. 4145, 4146, the top of which is high enough to be out of the reach of the highest floods. The details of the head of this column are shown in Fig. 4151. It is furnished with a snifting valve, the opening of which is regulated by the pointed screw *m* and a retaining valve *s*; a pipe *e'* forms the communication between the chamber of this valve and the body of the ram; the pipe opens into the ram below the clack G at E', Fig. 4145, and its orifice is furnished with a second valve *s'*, the details of which are shown in Figs. 4152, 4153. At the moment when the stroke occurs below the valve G, the water ascends violently the column *e* and compresses the air contained in it; a portion of this air escapes through the snifting valve, but the remaining portion lifts the valve *s*, and occupies a position above.

When the valve B descends, and the water entering the ram flows through the orifices of this valve, the water descends in the column *e*, and the external air enters through the snifting valve. The valve *s'* prevents the compressed air surrounding it from returning into the pipe *e'*, by closing the orifice of this pipe under the action of the stroke. The compressed air contained in the chamber of this valve is then forced to enter under the clapper G at the moment when the latter is open, and this air rises up into the air-vessel D. Thus the supply of air to this vessel is effected at each stroke.

4143.

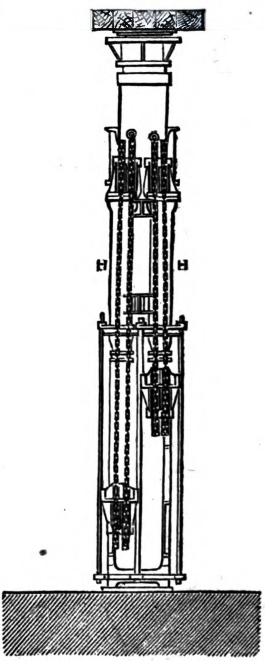

It is obvious that the importance of the mass of water contained in the ram, from the commencement of the inlet-pipe up to the clapper G, is not unworthy of consideration from the point of view of the effect produced. No authoritative rule exists relative to this question. According to some writers, the length of the body of the ram, that is, the length of the inlet-pipe, should be about $\frac{3}{4}$ of the height to which the water is to be raised. According to others, this length should be equal to the height, increased by the ratio between the double of the height and that of the fall. But neither of these empirical rules are in accordance with the dimensions of various existing rams.

As a mean, it may be reckoned that in a well-constructed hydraulic ram, the work, that is, the proportion of effective work in water raised to the motive work expended, is 60 per cent. This is a result that is not easily obtained with the best hydraulic motor working the best system of pumps. But the hydraulic ram can be constructed for only very small forces: were it not for this fact, this very simple engine would be generally employed.

Leblanc's Ram.—We will conclude our remarks on hydraulic rams with a few words respecting a contrivance employed to draw water from an excavation.

When the quantity of water to be drawn up is small, it is well to utilize the fall itself upon which hydraulic works are executed to effect the clearing of the excavation.

Fig. 4154 represents a hydraulic ram contrived for emptying a place of water. Two valves S S are connected by a beam oscillating about an axis *o o*. The water of the upper course, by flowing through the aperture uncovered by one of the valves, produces the effect of the water-spout, and sucks up the water from the stream to be emptied through the pipe *n n*. This pipe is provided with an air-vessel *m*, and separates into two branches S' S', furnished with retaining valves; each of these two branches opens under the seat of one of the valves S S. The water sucked up flows away into the lower course, with the motive water, through one of the pipes *d d*. The flow of the motive water through one of the valves S causes this valve to close, and consequently the other to open, and *vice versâ*. Thus the apparatus is self-acting.

The hydraulic ram was used in making the Mont Cenis tunnel to compress the air necessary for the supply of the wind-ways and for working the boring tools. Before the erection of the powerful compression-pumps used later, M. Sommalier, the engineer of these works, had a series of hydraulic rams constructed working under a fall of 26 mètres. These rams compressed up to five atmospheres the air necessary to drive the tools and to ventilate the works.

Water-pressure Engines.—This class of motors is generally erected to utilize small volumes of water and very high falls. They are usually employed to raise water or rather to drive pumps. In this case it consists, in its essential parts, of a cylinder and a piston moving with a reciprocating motion; the piston-rod transmits this motion directly to the pump. It will be seen at once that the construction of water-pressure, or as they are usually called, reciprocating engines, is much more like that of steam-engines than that of the hydraulic motors which we have already considered. These pressure engines, however, require a particular arrangement of the distributing apparatus, often giving occasion for some very ingenious and remarkable contrivances, which we will describe farther on. Two artifices used to vary the pressure in a steam-engine, namely, *expansion* and *variation of pressure*, cannot be employed in a water-pressure engine. The water being incompressible cannot expand, and if the pressure were made to vary, the utilized fall would be diminished without proportionately reducing the volume of water expended (which is always equal to the volume generated by the piston); therefore the duty of the engine would be decreased, which would be bad. The variations of the fall, and consequently of the pressure, should be only an inappreciable fraction, so to speak, of the total fall; for this reason, these engines are applied only to high falls.

4144.

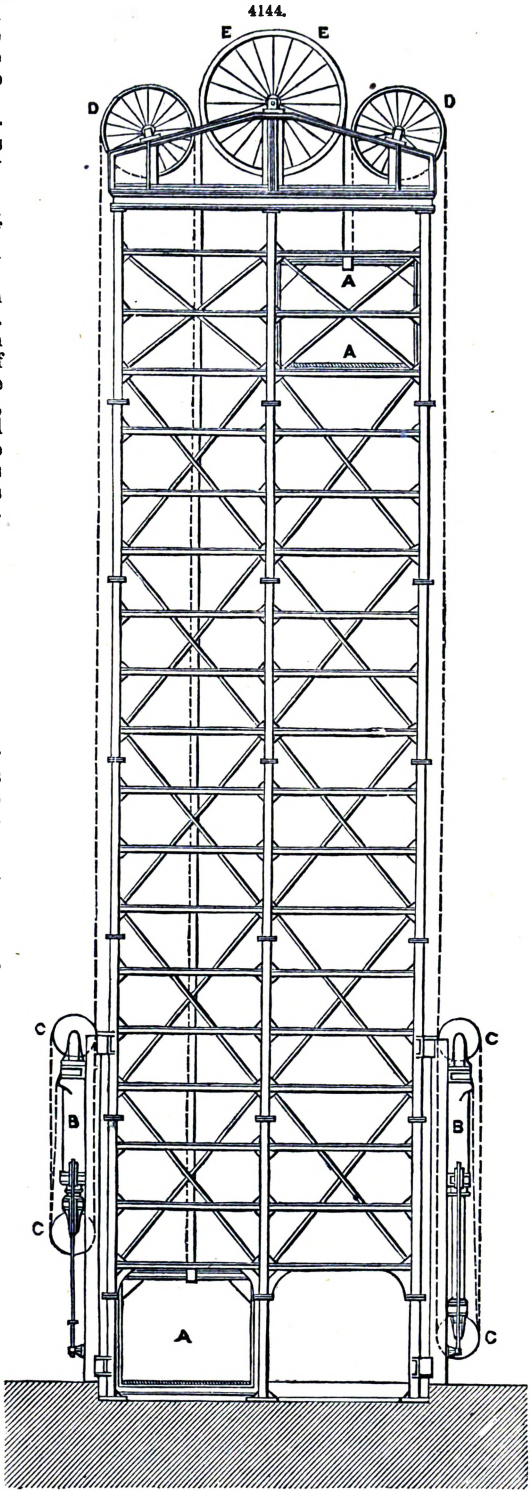

4145.

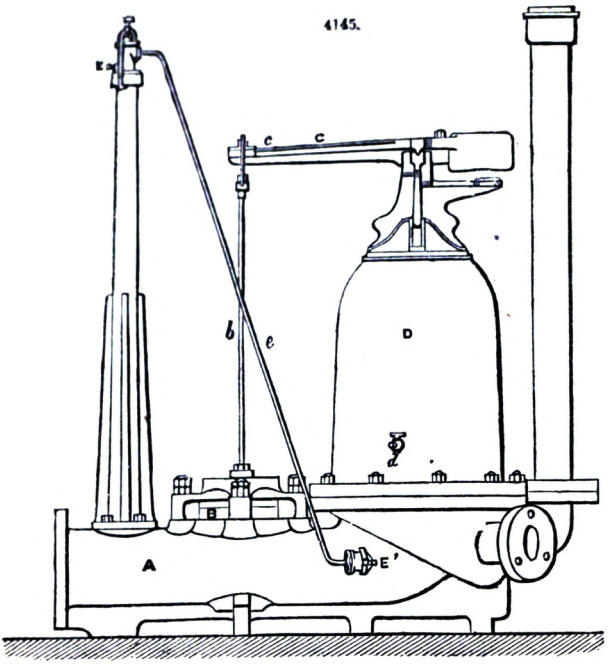

4146.

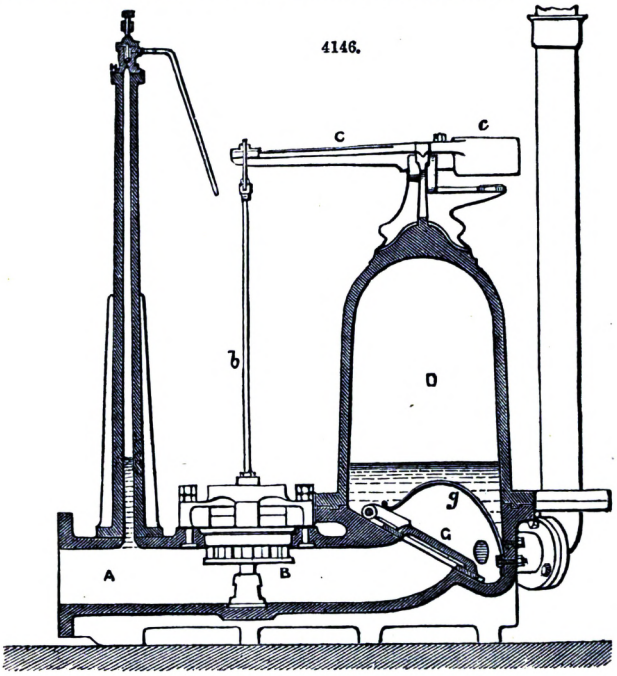

4147.

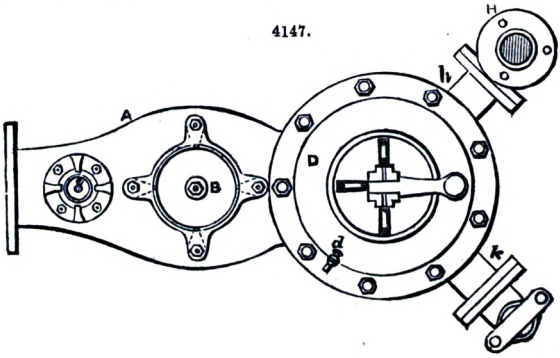

4148.

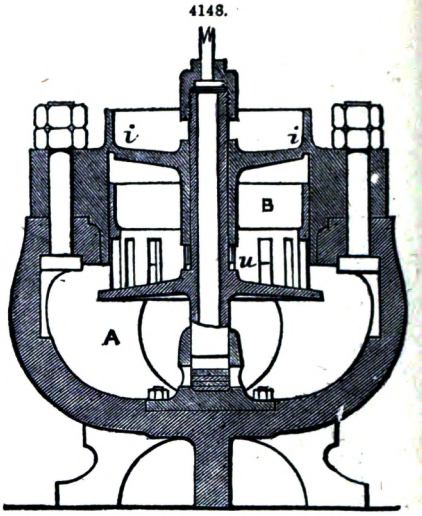

4149.

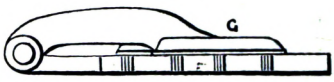

4150.

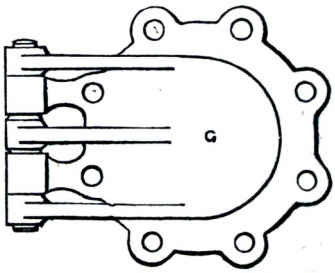

4152.

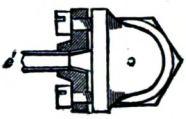

4151.

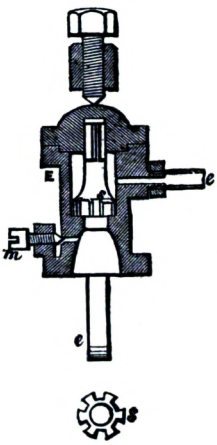

4153.

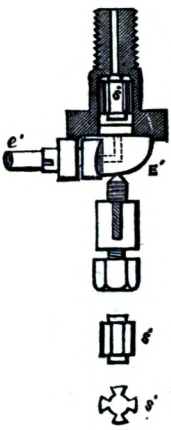

M. Girard has, indeed, studied their application to low falls, but the motion has not been received in practice.

4154.

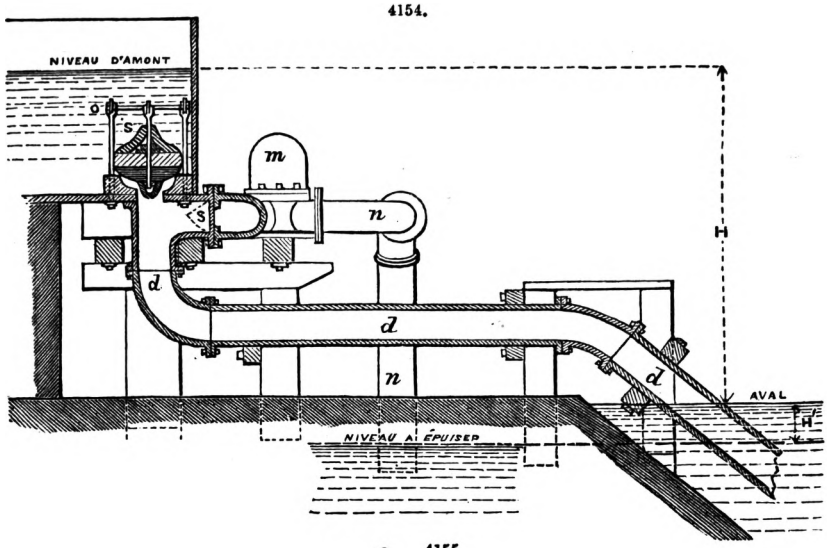

4155.

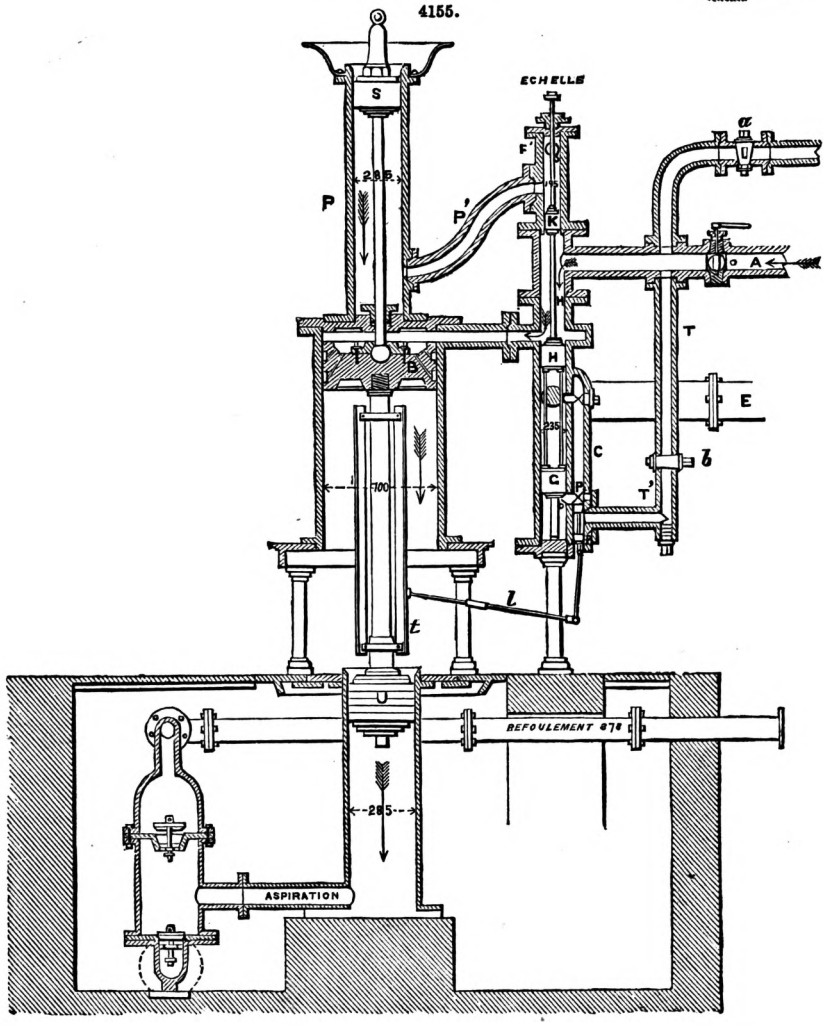

With respect to the mode of action of the water, these engines are divided into two classes: single-action and double-action engines; the former are vertical, the latter horizontal. Direct and

single-action reciprocating engines work either with a downward or with an upward stroke. In the former case, the motive water is let in only upon the upper face of the piston; in the latter case, it is let in only beneath its lower face.

Reichenbach's engine at Illsang, in Bavaria, is the oldest and most remarkable type of the single-action engines, working with a downward stroke. Fig. 4155 represents a vertical section of this engine. For the sake of brevity, we will merely give an explanation of the references.

4156.

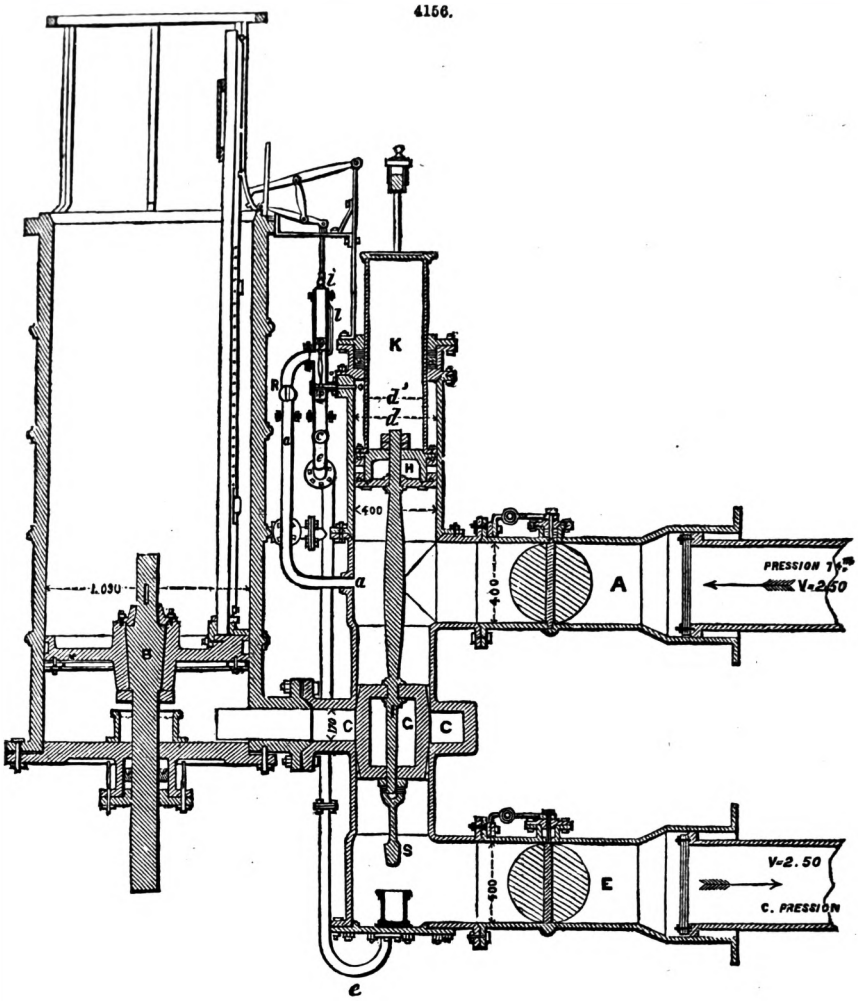

4157.

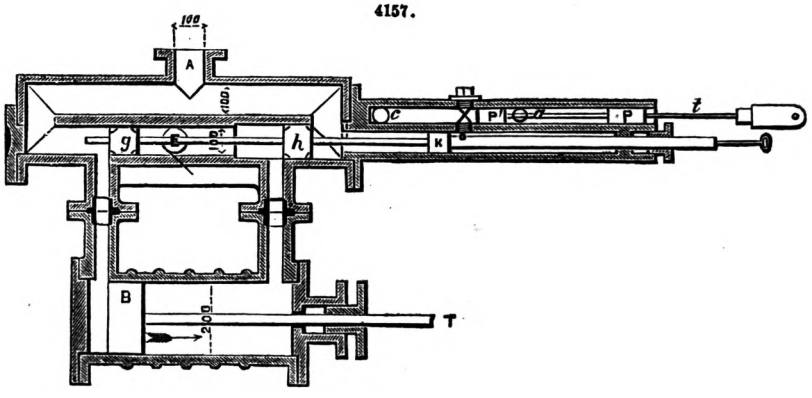

A, the inlet-pipe; a valve *o* serves to regulate the speed of the engine, that is, the expenditure of water. This expedient is serviceable where there is an excess of fall, but it is bad in principle,

as the partial closing of the valve causes a contraction. *a*, air purge-cock; when this is opened before the engine is started, the cock *b* is shut, and when the engine is cleared of air, the cock *a* is closed and *b* opened. E, outlet or discharge pipe for the water that has done its work; in the figure, the communication between this pipe and the cylinder is interrupted by the piston H, and the communication between this same pipe and the cylinder C established.

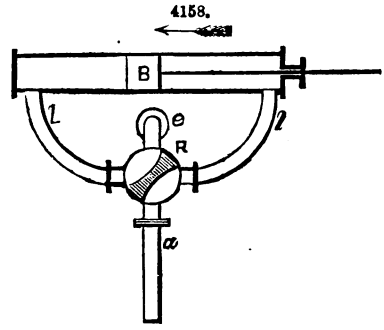

At starting, the driving or loaded piston B being at the top or beginning of its stroke, the mutually dependent pistons K, G, H, are raised so that the piston H may occupy the position H'. The pistons *p* and *p'* are moved by hand, and the orifice *o* is uncovered to put it in communication with the discharge-pipe E. The diameter of the piston K is a little less than that of the pistons H and G, which are equal, and the top of this piston is in communication with the motive water through a pipe which opens at *o'*. The valve O being open, the pressure of the water causes the three pistons K, H, G, to descend, and the piston H uncovers the orifice of communication with the driving piston B; these three pistons then occupy the positions shown in the figure. As the piston S, which is in constant communication with the motive water through the pipe P', is of a much smaller diameter than the loaded piston B, the latter descends, and brings down, consequently, the piston *u* of the pump; this piston forces the water to be raised up the ascending pipe.

A little before the piston B has reached the end of its stroke, a pin *t* acts upon a lever *l*, which raises the pistons *p* and *p'*, and places them in such a way that the orifice *o* is put in communication with the pipe T, which brings in the water. The result of this is that as soon as the piston B is at the end of its stroke, the bottom of the piston G is in communication with the water; the pressures upon the pistons G and H therefore balance each other. But as the upper rod of the piston K is a little larger in diameter than its lower rod, the water raises the three pistons and replaces them in their original position. The top of the piston B is in communication with the escape-pipe E, and the pressure under the piston *s* raises this piston, and consequently the loaded piston B, as well as the pump-piston *u*. When the loaded piston has been raised to the position it occupies in the figure, a lower pin *t* has moved the lever *l* to bring down the pistons *p* and *p'*, and make the engine begin again the downward stroke.

The pressure of the water is 116 mètres; the stroke of the pistons B and U is $1^{m}\cdot05$; the engine makes $2\frac{15}{100}$ strokes a minute; and the salt water is raised by the pump to a height of 378 mètres, including the suction; the stroke of the pistons K, H, G, is $0^{m}\cdot330$. The volume of water expended at each double stroke may be resolved thus;—

1. For the downward stroke there is expended a cylinderful for piston B;

$$\frac{\pi}{4} \times \overline{0\cdot720}^{2} \times 1^{m}\cdot05 \quad .. \quad .. \quad .. \quad .. \quad 428 \text{ litres.}$$

2. To change the direction of the motion, a cylinderful is expended for piston G;

$$\frac{\pi}{4} \times \overline{0\cdot235}^{2} \times 0^{m}\cdot33 \quad .. \quad .. \quad .. \quad .. \quad 10 \text{ litres.}$$

3. To raise the pistons S, T, U, a cylinderful is expended for piston S;

$$\frac{\pi}{4} \times \overline{0\cdot285}^{2} \times 1^{m}\cdot05 \quad .. \quad .. \quad .. \quad .. \quad 67 \text{ litres.}$$

4. To change the direction of the motion, that is, to determine the ascent of the three pistons S, T, U, there is expended only the difference between a cylinderful of G and a cylinderful of K;

$$\frac{\pi}{4}\left(\overline{0\cdot235}^{2} - \overline{0\cdot195}^{2}\right) \times 0^{m}\cdot33 = 4\cdot15 \text{ litres, say 5 litres.}$$

The total expenditure of motive water (fresh water) is thus 510 litres, say 500 in round numbers.

Motive work in horse-power a second, $\mathrm{M}\,w = \dfrac{500^{k} \times 116^{m} \times 2^{s}\cdot15}{60 \times 75^{kg}} = 28$ horse-power.

The pump U raises at each stroke 67 litres $\left(\frac{\pi}{4} \times \overline{0\cdot285}^{2} \times 1^{m}\cdot05 = 67 \text{ litres}\right)$, weighing about 1·20 kilogramme the litre, to a height of 378 mètres. The effective work in horse-power a second is therefore $\mathrm{E}\,w \dfrac{80^{k} \times 378^{m} \times 2^{s}\cdot15}{60'' \times 75^{kg}} = 14$ horse-power.

The work *in water raised* is therefore 50 per cent.

These calculations are only approximative, since they suppose that the volume generated by the pistons is just the volume expended or raised, and that there is no loss from escapes.

The engine erected by M. Jüncker at the Huelgoat Mines (Finistère), a vertical section of which is shown in Fig. 4156, is an imitation of Reichenbach's. It is, however, much more powerful and more rigid. The well in which it is fixed, offered only a limited space, and consequently its erection required special arrangements. The pump, too, which it had to work, being situate at a great depth beneath the engine, a long, heavy rod had to be balanced. This last circumstance induced M. Jüncker to make the engine work with an upward stroke only, in order that the rod might be subjected to tension in transmitting to the pump the work requisite to raise the water.

As the Huelgoat engine works only with an upward stroke the upper part of the cylinder is

open, and the leakage of the piston may therefore be readily perceived; this is not the case in Reichenbach's engine.

The adit is situate 14 mètres above the engines, so that the weight of all the tackle is balanced, for the ascent, by a column of water 14 mètres high, having as a base the section of the loaded piston. The introduction and discharge of the water, and consequently the speed of the engine, is regulated by means of the piston G. The figure shows this piston in its middle position; it closes the admission-port C beneath the loaded piston.

The engine is started by opening the cock R, which puts the inlet-pipe A in communication with the space between the two pistons p, p', which is of the same diameter; the cock c is also open. In order that the pistons p and p' may be easily brought into the position shown in the figure, that is, so as to uncover the orifice of the pipe o o, which puts the pipe a in communication with the top of the piston H, a pipe t is made to afford communication between the two fans of the piston p; the diameter of the rod i of this piston is such that the pressure of the water upon the annular surface of the piston p around the rod i is exactly equal to the counter-pressure beneath the piston p'. The moving hand of the pistons p and p' puts the two faces of the piston H in communication, and, as the annular surface of the upper face, increased by the section of the piston G, is a little greater than the area of the lower face, the water forces down the whole of the pistons K, H, and G, and opens the port C, through which the water is let under the piston B. The ball s at the end of the rod of the piston G enters a small cylinder v bored to a diameter only a very little greater than that of the ball; the water in this cylinder breaks the descent of the parts and prevents a shock. When the piston B is near the end of its stroke, a system of pins and levers raises the pistons p and p', so as to put the pipe o o in communication with the escape-pipe e e. This causes the piston G to ascend, which, passing before the port C, rises above, to put the lower face of the piston B in communication with the eduction-pipe E. The piston B then descends, and another system of pins brings back the pistons p and p' to the position shown in the figure, when the piston B has arrived at the end of its stroke.

We ought to remark here that the passage of the distributing piston in front of the port C has the effect of stopping for an instant the loaded piston B when it has reached the ends of its stroke. The dead-points of the pump are in this way very distinctly marked; this is a favourable circumstance, as it allows the valves time to close. This arrangement also causes the piston to start slowly in either direction, which gives the valves time to open fully before the pump-piston has acquired its full speed. The engine may be stopped at any part of its stroke, and the stroke may be varied as required. Thus Jüncker's engine is the most perfect of any at present employed.

Pfetsh's Horizontal, Double-action Engine, erected at the Salt-works of St. Nicholas, at Varangeville.—This engine, a section of which is shown in Fig. 4157, works directly a horizontal double-action pump, by means of the rod t. The engine being a double-action one, it has two distributing pistons g and h (the diameter of the second being a little greater than that of the first), which put successively each face of the piston B in communication with the induction-pipe A and the eduction-pipe E. The distributing pistons are worked as in Jüncker's engine, by means of two small pistons P and P′ of equal diameter.

In the position shown in the figure, the pistons P and P′ put the fore face of the piston K in communication with the escape e; the distributing pistons g and h (both on the same rod) are then placed in the position shown in the figure, so that the piston B is about to move in the direction of the arrow. On approaching the end of its stroke, the piston B acts upon the rod t and places the pistons P and P′ so that the orifices o and a are comprised between them; the water then presses upon the fore face of the piston K: this causes g and h to move back so that the fore part of the cylinder is in communication with the pipe A, and the after part in communication with the orifice E of the escape-pipe. The piston B then begins its back stroke, and, having reached the end, it acts upon the rod t to bring back the pistons P and P′ to the positions they occupy in the figure; this causes g and h to replace each other, as the figure also shows.

Reciprocating engines have been used during the last few years to turn a shaft. Since the Exhibition of 1851 they have become common in England, especially among the lead mines of the North, where they are used to raise the ore. Sir Wm. Armstrong is the chief constructor of this kind of double-action engine, which he employs to work whims. They consist, in their essential parts, of two horizontal cylinders, the pistons of which drive two cranks at right angles. A distributing apparatus comprising, for each cylinder, a *normal* slide-valve, that is, without lead or overlap, which must be regulated with great nicety on account of the incompressibility of the water. These engines have between the diameter and the stroke of the pistons the usual proportions of a water-pump, and they work at a low rate of speed, generally less than twenty revolutions a minute. The induction-pipe should be provided with the necessary means for avoiding ram strokes, namely, an air-vessel, or safety-valves, or a plunger loaded with weights and moving in a pump-barrel fixed near the engine and in communication with the induction-pipe. The motion of the slide-valves is communicated by means of link-motion, which enables the engine to be reversed, so as to drive the whim sometimes in one direction and sometimes in the other. If the reversing is not required, the distribution may be effected by a three-way cock R, Fig. 4158. In the position shown in the figure, the port l is in communication with the inlet a; whilst the port l is in communication with the escape e, the piston B is moving in the direction of the arrow.

It is indispensable that the water employed in these engines should be quite free from gravel and other bodies in suspension, which would soon injure the rubbing parts.

Sir Wm. Armstrong has also constructed triple engines, with double-action, the three pistons of which drive three cranks conjugated at 120°. As an example, we will cite the 8 horse-power engine at the docks of Marseilles. It has three horizontal oscillating cylinders, and it drives a cranked shaft. The hollow axis of each oscillating cylinder receives the water on one side, and on the other works its slide-valve, which is wholly detached from the cylinder. These cylinders are $0^m \cdot 107$ in diameter from inside to inside, and the stroke of the pistons is $0^m \cdot 304$. As the engine

makes twenty revolutions a minute, it follows that the mean velocity of the pistons is only $\frac{0^m \cdot 304 \times 2 \times 20^r}{60''} = 0^m \cdot 203$ a second.

Substitute for a Stand-pipe, invented by Samuel Hocking, C.E., who first applied it to the Croydon Water-works in 1851.—In applying the single-acting Cornish engine to water-works where there is a variable pressure in the mains, a stand-pipe was added to maintain a uniform resistance against the action of the engine.

When the Croydon Water-works was designed by Mr. Ranger in 1850, it was considered that the storage reservoir on the hill was near enough to the engines to serve for the ordinary stand-pipe; and the engines were contracted for accordingly, that is to say, to work without the usual stand-pipe. Subsequently, however, the contractor's engineer, Samuel Hocking, who designed and erected these engines, finding that the town was to be supplied by branch pipes leading off from the main that conveyed the water from the engines to the reservoir, and that any breakage taking place in those branches might so lessen the resistance against the pumps as to endanger the safety of the engines, the entire risk of which was guaranteed by the contractors for one year, he contrived a cheap substitute for the ordinary stand-pipe, which the contractors supplied at their

4159.

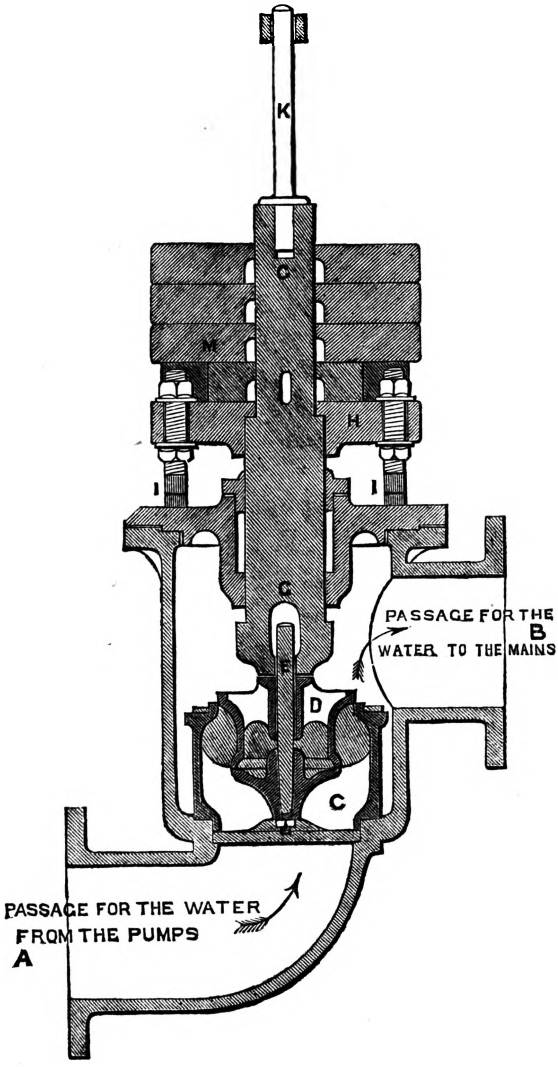

4160.

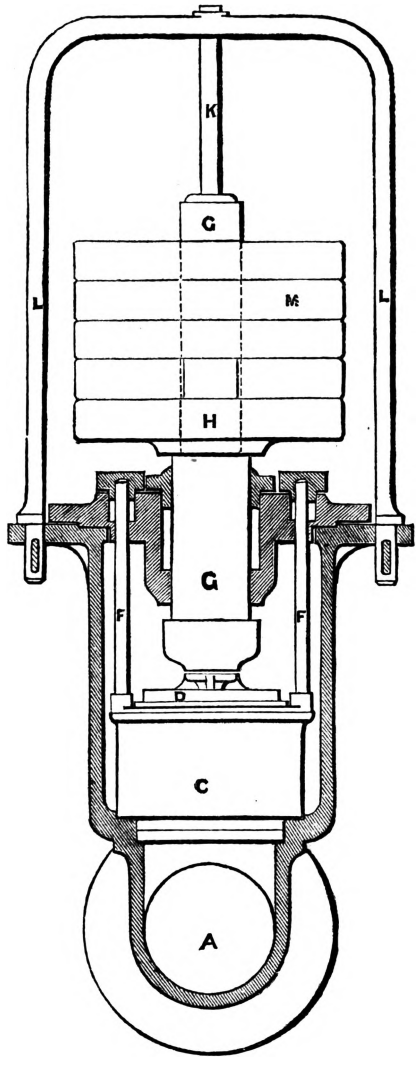

A, Branch joining air-vessel. B, Branch joining the main. C, Valve-seat. D, Valve, with small opposing surface to the flow of water through it. E, Valve-spill, fixed to the seat; and to get ample room for the top end of it, there is a hole in the bottom end of the plunger. N.B.—The valve here is free, but it may be hung fast to the plunger. F F, Bolts for fixing the valve-seat. G, Plunger, with a collar to limit its lift. H, Lowermost weight, fixed to the plunger. I I, Legs, to prevent the falling plunger striking hard on the valve. K, Lengthening-piece on top end of plunger. L, Guide for ditto.

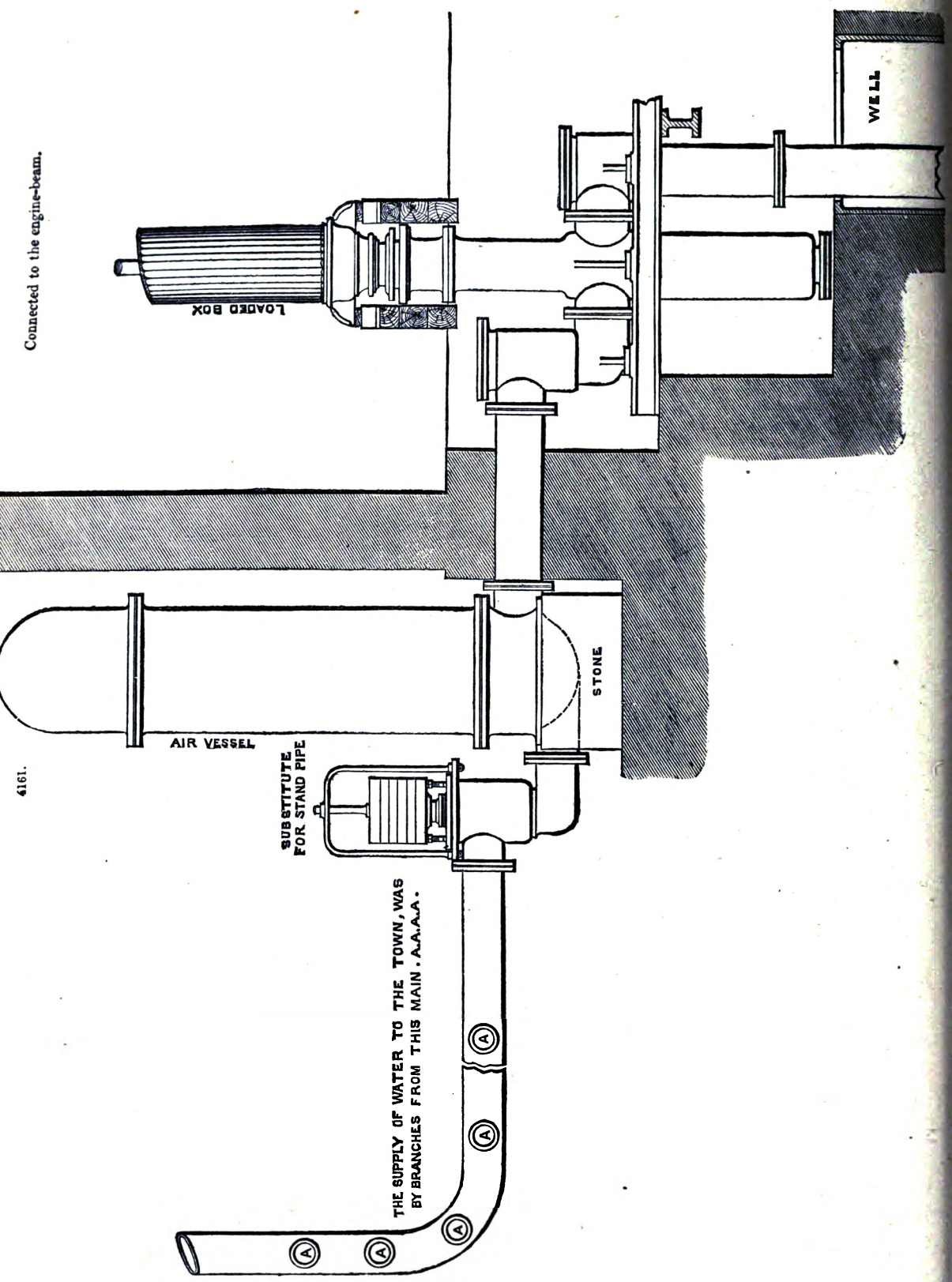
Connected to the engine-beam.
LOADED BOX
WELL
STONE
AIR VESSEL
SUBSTITUTE FOR STAND PIPE
THE SUPPLY OF WATER TO THE TOWN, WAS BY BRANCHES FROM THIS MAIN. A.A.A.A.
A
A
A
A
4161.

own cost rather than incur the risk of accident to the engines from that source during their period of guarantee.

This ingenious substitute for a stand-pipe, the construction and application of which we illustrate, Figs. 4159 to 4162, has a valve that is made to shut against the flow of water issuing from the pumps, which valve must open before any water can get into the main. It also has a plunger, or *hydraulic ram*, passing through a stuffing box over the valve; the bottom end of the plunger rests on the valve inside, and the top end of it carries a weight outside the main. The outside end of the plunger is loaded with weights amounting to a little less than that due to the full hydraulic pressure acting against the inside end of it. When the mains are under full pressure, this plunger is lifted up to its limit of travel, and the valve left free to act, nothing bearing on the valve but the pressure due to the column of water confined in the main. Whenever the hydraulic pressure in the mains gets reduced through accident or otherwise, the excess of weight on the plunger will bring it down to bear on the top of the valve, where it will act with that portion of its weight that is not balanced by the diminished hydraulic pressure in the main, thus maintaining a uniform load on the valve, and a uniform resistance against the engines. In starting, the engines have to pump against a weighted valve instead of a given column of water; and when the column is full, the weights cease to act.

4162.

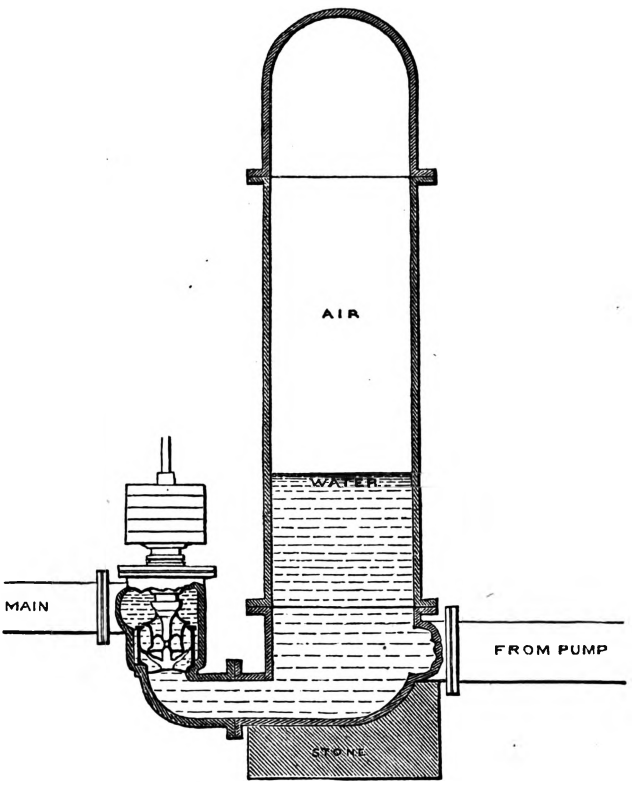

Section of air-vessel, Fig. 4161.

Had a common flat valve been used, the plunger above it would then be of the same diameter, requiring an unwieldy weight; but by reducing the area of the valve exposed to the upward flow of water, after the manner of construction of the ordinary double-beat valve, a small size plunger with manageable weights suffices.

To explain the construction of this apparatus more particularly, reference being made to Figs. 4159, 4160;—

A, that part of the apparatus that is fixed to the engine-pump, and through which all the water pumped has to pass to the valve C D, and thence to the mains through B.

C D, valve-seat and valve of the double-beat kind, the valve D working on a central spindle E.

F F, two bolts for screwing down the valve-seat from outside.

G, plunger-pole or ram, with a collar to prevent its rising too high; and a recess cast in the bottom end of it to give ample length of guide-spill for the valve.

H, a heavy cast-iron block, forming a round table for carrying the weight used for loading the plunger; it is securely fixed to the plunger-pole. It has two adjusting studds as legs, marked I I, on which the weight of the loaded plunger acts, thereby preventing it from striking on the valve, in case of sudden removal of hydraulic pressure by breakage of the mains.

K, wrought-iron lengthening-piece to the cast-iron plunger, over which the cast-iron weights M M slide off and on to adjust the load on the plunger when required.

L, a wrought-iron guide to steady the top end of the plunger-pole.

The beats of the valve C D are made very narrow—less than $\frac{1}{8}$ of an inch—to prevent the heavy jumping action that would have been occasioned by wide beats; before the valve opens, the force is measured by the surface within the beats, but the instant the valve moves, it is measured by the outside diameters.

4163.

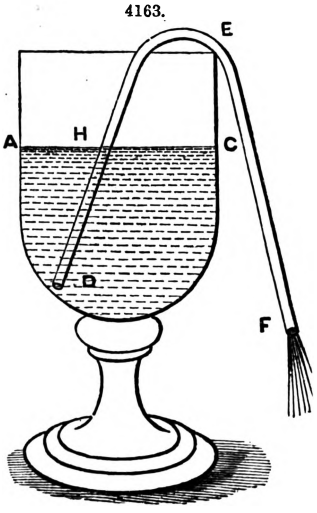

The Siphon.—If one end of a bent tube be put into a vessel of water, Fig. 4163, and the other end without be lower than the

surface of the water, then if the air be extracted out of the tube D E F, or the tube be filled with water, the water will flow through the tube in a continued stream, until the surface of the water in the vessel is on a level with the extremity F. For when the air is drawn out of the siphon, the water will rise in it to E by the pressure of the atmosphere upon the surface of the water A C, and then it will descend to F by its own gravity. The siphon being full of water, the forces which act upon the water in the tube are the pressure of the atmosphere upon the surface A C, and the weight of the column of water E F, acting in the direction D E F; and the pressure of the air at F, and the weight of the column of water E H, acting in the opposite direction F E D. The pressure of the air on F and an equal surface of A C, may be considered equal to each other, for the difference of the altitudes of A C and F is too small to produce any appreciable effect on the pressure of the air; these pressures on the tube D E F will therefore balance each other. But the weight of the column of water E F being greater than the weight of the column of water E H, the sum of the pressures in the direction D E F is greater than the sum of the pressures in the direction F E D; the fluid, therefore, will continue to flow in the direction D E F until the surface of the fluid A C is on a level with F.

The siphon will not act if the height H E be greater than 33 ft., for then the pressure of the atmosphere on the surface A H will not be sufficient to raise the water to the highest point E.

Hydraulic Weighing Machine.—This machine, Figs. 4164 to 4166, invented by F. E. Duckham, presents improved appliances and furnishes a means of attachment for the goods to be weighed, whereby they may be suspended from the piston instead of being placed directly upon it; in this manner all liability to press unequally on the piston is avoided, as well as the consequent development of undue friction between the piston and the sides of the cylinder, which frequently occurs when goods are placed on a platform formed by the top surface of the piston. For this purpose the inventor suspends or attaches the apparatus or cylinder by means of a suitable stirrup-piece or sling connected to a link from a crane or in other convenient position. The goods to be weighed are suspended from the centre of the piston by means of a piston-rod which passes through a suitable water-tight gland or packing in the bottom of the cylinder, and to the lower end of which rod the goods to be weighed are attached. A pressure-gauge communicates as usual with the liquid in the cylinder for the purpose of indicating the degree of pressure on such liquid, or in other words the weight of the goods suspended.

4164.

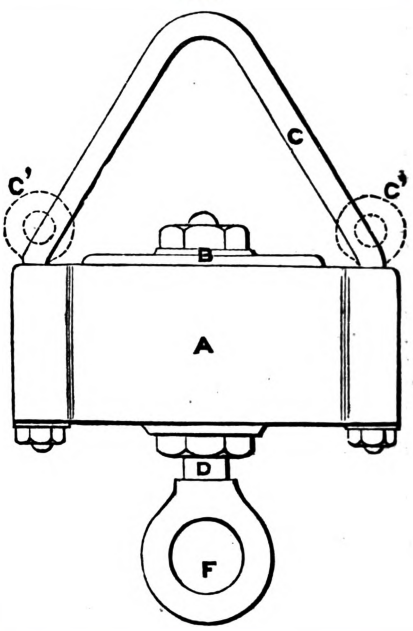

Instead of employing a central piston-rod passing through the bottom of the cylinder, the goods may be suspended by means of an inverted stirrup-piece, similar to that by which the apparatus is sustained, and which is passed over the top of the piston and down through guides placed on the outside of the cylinder, below which it is united in a link, to which the goods may be attached. In this case the top of the piston should be made of sufficient diameter to project slightly over the top of the cylinder.

Instead of suspending the apparatus by means of a sling or stirrup-piece, it may be mounted in gimbals or trunnions supported by a bracket or shelf, or the apparatus may be bolted securely thereto, the goods being attached as previously described.

When this contrivance is employed to denote strains, or for other testing purposes, the cylinder is firmly secured in a vertical or other position, and tension applied to the piston-rod or stirrup-piece, the strain being denoted on the pressure-gauge as before.

4165.

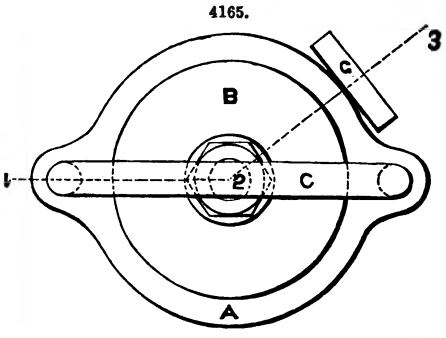

Fig. 4164 is an outside elevation of one arrangement of this hydrostatic weighing apparatus; Fig. 4165 a plan, and Fig. 4166 a sectional elevation taken on line 1, 2, 3, Fig. 4165. A is the cylinder containing water or other suitable liquid, on the surface of which rests a piston or plunger B. To this cylinder A is bolted a stirrup-piece C, by which we may suspend the apparatus from a crane or apply it in any other convenient position. Instead of a stirrup-piece the apparatus may be slung by a chain or chains attached to eye-bolts C^1 C^1, connected to the cylinder. D is the piston-rod passing down through a water-tight gland or packing E in the bottom of the cylinder A. At the lower end of this rod D is formed an eye F, to which the goods to be weighed are attached. The latter are thus suspended from the centre of piston B, on which the pressure will be uniformly distributed. G is a pressure-gauge of any suitable construction, and communicating with the liquid in the cylinder, for the purpose of indicating the weight of the goods suspended from piston-rod D, the connection being either through the back of the gauge, as

shown in Fig. 4166, or through the rim of the gauge, or the connection may be at any other convenient point. The piston B and gland E are made water-tight either by means of cup-leathers of the usual form, as shown at *a a*, in Fig. 4166; many other arrangements may be employed to render the piston water-tight.

4166.

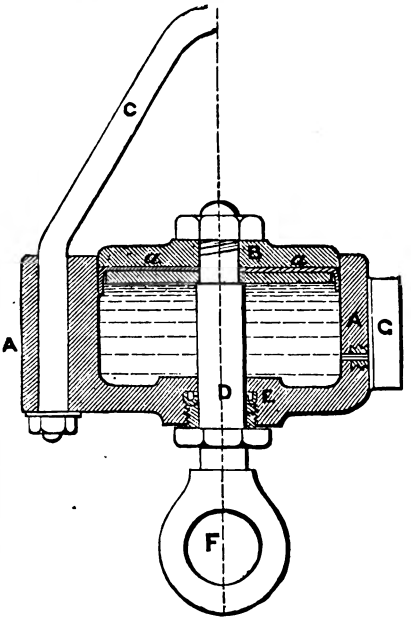

This weighing machine, like many hydraulic contrivances, is only a particular application of the principle upon which Timothy Bramah constructed his famous press, of which we treat next.

The Hydrostatic or Bramah Press.—The following article on Bramah's Press is taken from Alexander Jamieson's excellent work, Mechanics of Fluids for Practical Men;—

If there be any number of pistons of different magnitudes, anyhow applied to apertures in a cylindrical vessel filled with an incompressible and non-elastic fluid,

The forces acting on the piston to maintain an equilibrium, will be to one another as the areas of the respective apertures, or the squares of the diameters of the pistons.

Let A B C D, Fig. 4167, represent a section passing along the axis of a cylindrical vessel filled with an incompressible and non-elastic fluid, and let E F be two pistons of different magnitudes, connected with the cylinder and closely fitted to their respective apertures or orifices; the piston F being applied to the aperture in the side of the vessel, and the piston E occupying an entire section of the cylinder or vessel, by which the fluid is contained. Then, because by the nature of fluidity the pressures on every part of the pistons E and F are mutually transmitted to each other through the medium of the intervening fluid, it follows that these pressures will be in a state of equilibrium when they are equal among themselves.

4167.

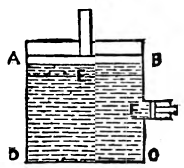

Now it is manifest that the sum of the pressures propagated by the piston E is proportional to the area of a transverse section of the cylinder; and in like manner the sum of the pressures propagated by the piston F is proportional to the area of the aperture which it occupies; consequently an equilibrium must obtain between these pressures,

When the forces on the pistons are to one another respectively as the areas of the apertures or spaces which they occupy.

And it is obvious that the same thing will take place, whatever may be the number of the pistons pressed.

Hence it appears that by taking the areas of the pistons E and F in a proper ratio to one another, we can, by means of an incompressible fluid, produce an enormous compression, and that too by the application of a very small force.

Put P = the force or pressure on the piston E,
A = the area of the orifice which it occupies,
p = the pressure on the piston F, and
a = the area of the orifice or space to which it is fitted.

Then, according to the principle announced in the foregoing proposition and demonstrated above, we shall obtain $a : A :: p : P$.

But because, by the principles of mensuration, the areas of different circles are to one another as the squares of their diameters; if therefore we substitute d^2 and D^2 respectively for a and A in the above analogy, we shall have $d^2 : D^2 :: p : P$, and from this, by making the product of the mean terms equal to the product of the extremes, we get

$$p D^2 = P d^2. \qquad [A]$$

This is the principle upon which depends the construction and use of that very powerful instrument, the *Hydrostatic Press*, first brought into notice about the year 1796, by Joseph Bramah, of London, who announced it to the world as the discovery of a new mechanical power. In this, however, he was mistaken, for although the principle upon which it depends may be said to constitute a seventh mechanical power, yet the principle was not new to philosophers at the time when Bramah applied it to the construction of his presses, it having long been familiarly known under the designation of the *Hydrostatic Paradox;* and besides, the celebrated Pascal obscurely hinted at its application to mechanical purposes, but did not pursue the idea far enough to produce anything useful, or to entitle him to the merit of the discovery.

The improvement introduced by Bramah consisted in the application of the common forcing pump to the injection of water, or some other incompressible and non-elastic fluid, into a strong metallic cylinder, truly bored and furnished with a movable piston, made perfectly water-tight by means of leather collars or packing, neatly fitted into the cylinder.

The proportion which subsists between the diameter of this piston and that of the plunger in the forcing pump, constitutes the principal element by which the power of the instrument is

calculated; for, by reason of the equal distribution of pressure in the fluid, it is evident that whatever force is applied, that force must operate alike on the piston in the cylinder, and on the plunger in the forcing pump, and consequently,

In proportion as the area of the transverse section of the one exceeds the area of a similar section of the other, so must the pressure sustained by the one exceed that sustained by the other.

Therefore if the piston F in the preceding diagram be assimilated to the plunger in the barrel of a forcing pump, and the piston E to that in the cylinder of the hydrostatic press; then the equation marked [A], notwithstanding the very simple and concise form in which it appears, involves every particular respecting the power and effects of the engine.

This being premised, we shall now proceed to exhibit the use and application of the formula, by the resolution of the following practical examples.

Ex. 1.—If the diameter of the cylinder is 5 in., and that of the forcing pump 1 in.; what is the pressure on the piston in the cylinder, supposing the force applied on the plunger or smaller piston to be equivalent to 750 lbs.?

Here we have given D = 5 in.; $d = 1$ in., and $p = 750$ lbs.; therefore, by substitution, equation [A] becomes $5^2 \times 750 = P \times 1^2$; that is, P = 18750 lbs.

Or the equation for the value of P may be expressed in general terms as follows; $P = \frac{p\,D^2}{d^2}$.

And from the equation in its present form we deduce the following practical rule.

RULE.—*Multiply the square of the diameter of the cylinder by the magnitude of the power applied, and divide the product by the square of the diameter of the forcing pump, and the quotient will express the intensity of the pressure on the piston of the cylinder.*

Ex. 2.—If the diameter of the cylinder is 5 in., and that of the forcing pump 1 in.; what is the magnitude of the power applied, supposing the entire pressure on the piston of the cylinder to be 18750 lbs.?

Here we have given D = 5 in.; $d = 1$ in., and P = 18750 lbs.; therefore, by substitution, equation [A] becomes $5^2 \times p = 18750 \times 1^2$; or $p = 750$ lbs.

If both sides of the fundamental equation [A] be divided by D^2, the general expression for the value of p is $p = \frac{P\,d^2}{D^2}$.

And the practical rule which this equation supplies may be expressed in words at length in the following manner.

RULE.—*Multiply the given pressure on the piston of the cylinder by the square of the diameter of the forcing pump, and divide the product by the square of the diameter of the cylinder for the power required.*

Ex. 3.—The diameter of the forcing pump is 1 in., and the power with which the plunger descends is equivalent to 750 lbs.; what must be the diameter of the cylinder, to admit a pressure of 18750 lbs. on the piston?

Here we have given $d = 1$ in.; $p = 750$ lbs., and P = 18750 lbs.; consequently, by substitution, the equation marked [A] becomes $750\ D^2 = 18750 \times 1^2$; hence, by division, we obtain $D^2 = \frac{18750}{750} = 25$; consequently, by evolution, we have $D = \sqrt{25} = 5$ in.

If both sides of the equation [A] be divided by p, and the square root of the quotient extracted, the general expression for the diameter of the piston is $D = \sqrt{\frac{P\,d^2}{p}}$.

And the practical rule for the determination of D may be expressed in words as follows.

RULE.—*Multiply the pressure on the piston of the cylinder by the square of the diameter of the forcing pump, and divide the product by the force with which the plunger descends; then the square root of the quotient will be the diameter of the cylinder sought.*

Ex. 4.—The diameter of the cylinder is 5 in., and the force with which the plunger descends is equivalent to 750 lbs.; what must be the diameter of the forcing pump, in order to transmit a pressure of 18750 lbs. to the piston of the cylinder?

Here we have given D = 5 in.; $p = 750$ lbs., and P = 18750 lbs.; consequently, by substitution, equation [A] becomes $18750\ d^2 = 750 \times 5^2$, and by division we shall have $d^2 = \frac{750 \times 25}{18750} = 1$; therefore, by extracting the square root, we get $d = \sqrt{1} = 1$ in.

If both sides of the original equation marked [A] be divided by P, and the square root extracted, the entire pressure on the piston, the general expression for the value of d becomes $d = \sqrt{\frac{p\,D^2}{P}}$

And the practical rule which this equation supplies may be expressed in the following manner.

RULE.—*Multiply the force with which the plunger descends by the square of the diameter of the cylinder, and divide the product by the entire pressure on the piston; then extract the square root of the quotient for the diameter of the forcing pump.*

The foregoing is the theory of the hydrostatic press, as restricted to the consideration of the diameters of the cylinder and forcing pump, and the respective pressures on the piston and plunger; but since the instrument is generally furnished with an *indicator* or *safety-valve* for measuring the intensity of pressure, the theory would be incomplete without considering it in connection with the diameters of the pump and cylinder. For which purpose

Put δ = the diameter of the safety-valve, expressed in inches or parts,
and w = the weight thereon, or the force that prevents its rising.

Then, according to the principle announced, p. 1983, we obtain the following analogies, namely;—

$$D^2 : \delta^2 :: P : w,$$
$$d^2 : \delta^2 :: p : w;$$

and from these analogies, by making the products of the extreme terms equal to the products of the means, we get

$$D^2 w = \delta^2 P, \qquad [B]$$
$$\text{and} \quad d^2 w = \delta^2 p. \qquad [C]$$

Now, in order to pursue the expansion of these equations, we shall suppose the value of δ to be one-fourth of an inch, while the numerical values of the other letters remain the same as supposed for the several examples under equation [A]; then, to determine the corresponding value of w, or the power which prevents the safety-valve from rising, when all the parts of the instrument, or the several powers and pressures, are in a state of equilibrium, we have the following examples to resolve according to the proposed conditions.

Ex. 5.—The diameter of the cylinder is 5 in., that of the indicator or safety-valve $\frac{1}{4}$ of an inch, and the entire pressure upon the piston of the cylinder 18750 lbs.; what is the corresponding force preventing the ascent of the safety-valve, on the supposition of a perfect equilibrium?

Here we have given $D = 5$ in.; $\delta = \frac{1}{4}$ of an inch, and $P = 18750$ lbs.; consequently, by substitution, the equation [B] becomes $5^2 w = \cdot 25^2 \times 18750$; from which, by division, we get

$$w = \frac{\cdot 0625 \times 18750}{25} = 46 \cdot 875 \text{ lbs.}$$

But the general expression for the value of w, as derived from the equation [B], becomes $w = \frac{\delta^2 P}{D^2}$, from which we derive the following rule.

RULE.—*Multiply the entire pressure on the piston of the cylinder by the square of the diameter of the indicator or safety-valve, and divide the product by the square of the diameter of the cylinder for the weight required.*

Ex. 6.—The diameter of the safety-valve is $\frac{1}{4}$ of an inch, that of the cylinder 5 in., and the weight on the safety-valve 46·875 lbs., what is the corresponding pressure on the piston of the cylinder?

Here we have given $\delta = \frac{1}{4}$ of an inch; $D = 5$ in., and $w = 46 \cdot 875$ lbs.; therefore, by substitution, equation [B] becomes $\cdot 25^2 P = 5^2 \times 46 \cdot 875$, and by division we obtain

$$P = \frac{1171 \cdot 875}{\cdot 0625} = 18750 \text{ lbs.}$$

The general expression for the value of P, as derived from the equation marked [B], becomes

$$P = \frac{D^2 w}{\delta^2}.$$

And the practical rule supplied by this equation may be expressed in words as follows.

RULE.—*Multiply the weight on the safety-valve by the square of the diameter of the cylinder, and divide the product by the square of the diameter of the safety-valve, and the quotient will give the entire pressure on the piston of the cylinder.*

Ex. 7.—The diameter of the cylinder is 5 in., the entire pressure of the piston is 18750 lbs., and the weight on the safety-valve is 46·875 lbs.; what is its diameter?

Here we have given $D = 5$ in.; $P = 18750$ lbs., and $w = 46 \cdot 875$ lbs.; therefore, by substitution, equation [B] becomes $18750\ \delta^2 = 5^2 \times 46 \cdot 875$, and from this, by division, we get $\delta^2 = \frac{5^2 \times 46 \cdot 875}{18750} = \cdot 0625$; and by extracting the square root, we obtain $\delta = \sqrt{\cdot 0625} = \cdot 25$, or $\frac{1}{4}$ of an inch.

The general expression for the value of δ, as derived from the equation [B], is as follows namely, $\delta = \sqrt{\frac{D^2 w}{P}}$.

And the practical rule which this equation affords may be expressed in words in the following manner.

RULE.—*Multiply the load on the safety-valve by the square of the diameter of the cylinder, divide the product by the entire pressure on the piston, and the square root of the quotient will give the diameter of the safety-valve required.*

Ex. 8.—The diameter of the safety-valve is $\frac{1}{4}$ of an inch, the load upon it 46·875 lbs., and the entire pressure on the piston of the cylinder is 18750 lbs.; what is its diameter?

Here we have given $\delta = \frac{1}{4}$ of an inch, $w = 46 \cdot 875$ lbs., and $P = 18750$ lbs.; consequently, by substitution, we have $46 \cdot 875\ D^2 = \cdot 25^2 \times 18750$, from which, by division, we shall obtain $D^2 = \frac{\cdot 25^2 \times 18750}{46 \cdot 875} = 25$, and finally, by extracting the square root, we get $D = \sqrt{25} = 5$ in.

If both sides of the equation marked [B] be divided by w, the weight on the safety-valve, we get $D^2 = \frac{\delta^2 P}{w}$, and by extracting the square root, the general expression for the value of D, the diameter of the cylinder, becomes $D = \sqrt{\frac{\delta^2 P}{\ }}$. And from this equation we derive the following rule.

RULE.—*Multiply the entire pressure on the piston of the cylinder by the square of the diameter of the safety-valve, divide the product by the weight upon the safety-valve, and extract the square root of the quotient for the diameter of the cylinder sought.*

Ex. 9.—The diameter of the forcing pump is 1 in., that of the safety-valve is $\frac{1}{4}$ of an inch, and the power or force with which the plunger descends is equivalent to 750 lbs.; what is the corresponding weight on the safety-valve?

Here we have given $d = 1$ in.; $\delta = \frac{1}{4}$ of an inch, and $p = 750$ lbs.; consequently, by substitution, the equation [C] becomes $1^2 \times w = \cdot 25^2 \times 750$; that is, $w = 46 \cdot 875$ lbs., the very same value as we derived from the fifth example.

If both sides of the equation marked [C] be divided by d^2, the general expression for the value of w becomes $w = \frac{\delta^2 p}{d^2}$.

And the practical rule supplied by this equation may be expressed in words at length in the following manner.

RULE.—*Multiply the force with which the plunger descends by the square of the diameter of the safety-valve, and divide the product by the square of the diameter of the plunger; then the quotient will express the load upon the safety-valve.*

Ex. 10.—The diameter of the safety-valve is $\frac{1}{4}$ of an inch, that of the forcing pump is 1 in., and the load upon the safety-valve is $46 \cdot 875$ lbs.; what is the power applied, or the force with which the plunger in the forcing pump descends?

Here we have given $\delta = \frac{1}{4}$ of an inch, $d = 1$ in., and $w = 46 \cdot 875$ lbs.; consequently, by substitution, equation [C] becomes $\cdot 25^2 p = 46 \cdot 875 \times 1^2$, and from this, by division, we obtain

$$p = \frac{46 \cdot 875}{\cdot 0625} = 750 \text{ lbs.}$$

The general expression for the value of p, as obtained from the equation marked [C], becomes $p = \frac{d^2 w}{\delta^2}$, from which we derive the following rule.

RULE.—*Multiply the load on the safety-valve by the square of the diameter of the forcing pump, then divide the product by the square of the diameter of the safety-valve, and the quotient will give the force with which the piston descends.*

Ex. 11.—The diameter of the plunger or the piston of the forcing pump is 1 in., the force with which it descends is equivalent to 750 lbs., and the load on the safety-valve is $46 \cdot 875$ lbs.; what is its diameter?

Here we have given $d = 1$ in., $p = 750$ lbs., and $w = 46 \cdot 875$ lbs.; consequently, by substitution, we have $750\ \delta^2 = 1^2 \times 46 \cdot 875$, and from this, by division, we obtain $\delta^2 = \frac{46 \cdot 875}{750} = \cdot 0625$, and finally, by evolution, we have $= \delta \sqrt{\cdot 0625} = \cdot 25$ of an inch.

Let both sides of the equation marked [C] be divided by p, the power or force with which the piston of the forcing pump descends, and we shall have $\delta^2 = \frac{d^2 w}{p}$, and by extracting the square root we get $\delta = \sqrt{\frac{d^2 w}{p}}$. Hence the following practical rule.

RULE.—*Multiply the weight or load upon the safety-valve by the square of the diameter of the forcing pump, and divide the product by the force with which the plunger or piston of the forcing pump descends; then the square root of the quotient will be the diameter of the safety-valve.*

Ex. 12.—The diameter of the safety-valve is $\frac{1}{4}$ of an inch, the weight upon it is $46 \cdot 875$ lbs., and the power applied, or the force with which the plunger descends, is 750 lbs.; what is the diameter of the forcing pump?

Here we have given $\delta = \frac{1}{4}$ of an inch, $w = 46 \cdot 875$ lbs., and $p = 750$ lbs.; consequently, by substitution, the equation marked [C] becomes $46 \cdot 875\ d^2 = \cdot 25 \times 750$; therefore, by division, we obtain $d^2 = \frac{\cdot 25^2 \times 750}{46 \cdot 875} = 1$, and finally, by extracting the square root, we get $d = 1$ in.

The general expression for the value of the diameter of the forcing pump, as derived from the equation [C], is $d = \sqrt{\frac{\delta^2 p}{w}}$. And from this we obtain the following practical rule.

RULE.—*Multiply the force with which the piston of the forcing pump descends by the square of the diameter of the safety-valve, divide the product by the load on the safety-valve, and extract the square root of the quotient for the diameter of the forcing pump.*

The foregoing twelve examples exhibit all the varieties of cases that can arise from the combination of the six data which we have employed in our theory, namely, the diameters of the cylinder, the forcing pump, and the safety-valve; together with the entire pressure on the piston of the cylinder, the power applied to the plunger of the forcing pump, and the weight upon the safety-valve.

We have determined each of the quantities composing the several fundamental equations in terms of the others, and have drawn up rules from the general expressions, merely for the assistance of those who are not accustomed to algebraic reductions; those who are will prefer finding each quantity directly from the general equation expressing its value.

It is manifest from the principles of mensuration that the area of a transverse section of the cylinder, or the base of the piston, is expressed by $\cdot 7854\ D^2$; and we have shown that the entire pressure upon the base of the piston in the case of equilibrium is $P = \frac{p D^2}{d^2}$, and $P = \frac{D^2 w}{\delta^2}$; conse-

quently, if n denotes the pressure in pounds avoirdupois on one square inch of the piston, then we have

$$n = \frac{P}{\cdot 7854\, D^2}; \; p = \frac{p}{\cdot 7854\, d^2}, \text{ and } n = \frac{w}{\cdot 7854\, \delta^2}. \qquad [D]$$

Now, from principles investigated by Peter Barlow, it appears that if c denote the cohesive force of the material employed in the construction of the cylinder, t its thickness, and r the interior radius, then, in order that the strain produced by the pressure shall not exceed the elastic power of the material, it is necessary that $n = \frac{c\,t}{t + r}$.

In order to demonstrate this, let A B D, Fig. 4168, be a transverse section of the cylinder, perpendicular to the axis passing through C; then, supposing a certain uniform pressure to be exerted all round the interior boundary, it will readily appear, from the theory of resistance, that each successive circular lamina, estimated from the interior towards the exterior circumference, offers a less and less resistance to the straining force.

4168.

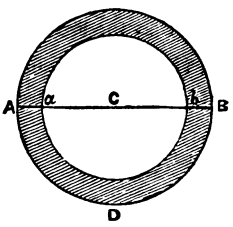

But it is obvious from the very nature of the subject that by reason of the internal pressure or strain the metal must undergo a certain degree of extension; and since the resistance of the outer boundary is less than that of the inner one, it follows that the extension must also be less. This is manifest, for the resistance which any body offers to the force by which it is strained is proportional to the extension which it undergoes divided by its length. Now, since the resistances of the several laminæ decrease as they recede from the interior boundary towards the exterior, while at the same time the corresponding circumferences increase, it is manifest that the extension for the several laminæ decreases to the last or exterior boundary, where it is the least of all. It is therefore the law of the decreasing resistance that the present inquiry is instituted to determine.

Put $d = a\,b$, the interior diameter of the cylinder before the pressure is applied,
e = the increase of d occasioned by the pressure,
d' = A B, the exterior diameter in its original state,
e' = the increase induced by pressure.

Then $(d + e)$ and $(d' + e')$ are respectively the interior and exterior diameters of the cylinder as affected by extension.

By the principles of mensuration, the area of the annulus, or circular ring contained between the interior and exterior boundaries,

Is equal to the difference of the squares of the diameters, drawn into the constant fraction 0·7854; *or it is proportional to the sum of the diameters, drawn into their difference.*

But according to the nature of the present inquiry, the area of the ring is the same, both before and after the extension takes place; consequently we have $(d' + e')^2 - (d + e)^2 = d^2 - d^2$; therefore, by expanding the terms on the left-hand side, we get $d'^2 + 2\,d'\,e' + e'^2 - d^2 - 2\,d\,e - e^2 = d^2 - d^2$; or, by transposing and expunging the common terms, it is $2\,d'\,e' + e'^2 = 2\,d\,e + e^2$; and this equation being converted into an analogy, gives $2\,d' + e' : 2\,d + e :: e : e'$.

Now, the quantity of extension that the material will allow before rupture being very small, especially as compared with the quantities $2\,d'$ and $2\,d$, it therefore follows that the quantities e' and e, in the first and second terms, may be conceived to vanish, and the above analogy becomes $d' : d :: e : e'$.

From this it appears that the extensions of the respective circumferences are inversely as the corresponding diameters; but we have stated above that the resistance is as the extension divided by the length; therefore we have $\frac{d}{d'} : \frac{d'}{d}$, or, which amounts to the same thing, $d^2 : d'^2$; hence this law, that the magnitude of the resistance offered by each successive circular lamina,

Is inversely as the square of its diameter, or, which is the same thing, inversely as the square of its distance from the common centre to which they are referred.

From the general law thus established, the actual resistance due to any point in the annulus, or to any thickness of metal, can very easily be ascertained.

Put r = C a, the interior radius of the cylinder, of which the annexed diagram, Fig. 4169, is a section,
t = a A, the entire thickness of the metal,
x = $a\,n$, any variable thickness estimated from a, the interior surface,
n = the pressure on a square inch of the inner surface in pounds avoirdupois,
f = the measure of the straining force, or the resistance sustained by the first or interior lamina; and
c = the cohesive force of the material.

4169.

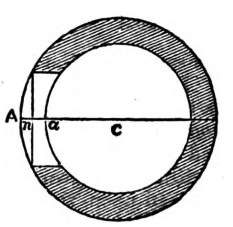

Then, agreeably to the law of the resistances which we have established above, we have $(r + x)^2 : r^2 :: f : \frac{f\,r^2}{(r + x)^2}$; this result expresses the strain at the point x, or the resistance of the material whose thickness is $a\,n$; and the fluxion

of this quantity, as referred to the variable thickness x, is flux. $= \frac{f r^2 \dot{x}}{(r+x)^2}$; consequently the fluent, or the sum of all the strains, is $\int \frac{f r^2 \dot{x}}{(r+x)^2} + C$, and this when $x = t$ becomes

$$f\left(r - \frac{r^2}{r+t}\right) = \frac{f r t}{r+t}.$$

Therefore if the strain or resistance f were to act uniformly on the thickness expressed by $\frac{f r t}{r+t}$, it would produce the same effect as if all the variable strains were to act on the whole thickness t.

The above law being admitted, let us suppose that the interior radius of the cylinder, and the pressure a square inch on the surface are given, and let it be required to determine the thickness such that the strain and resistance may be in equilibrio.

Here it is manifest that the greatest strain the thickness $\frac{r t}{r+t}$ can resist is $\frac{c r t}{r+t}$, and the strain to which it is actually exposed is $n r$; consequently, when these are equal, we have $n r = \frac{c r t}{r+t}$; from which, by expunging the common factor r, we get

$$n = \frac{c t}{r+t}. \qquad [E]$$

If this value of n be compared with its respective values as indicated in the equations [D] preceding, we shall have the following expressions for the thickness of metal in the cylinder to resist any pressure, while the elastic power of the material remains perfect, namely;—

$$t = \frac{P r}{\cdot 7854\, c\, D^2 - P}; \quad t = \frac{p r}{\cdot 7854\, c\, d^2 - p}, \text{ and } t = \frac{w r}{\cdot 7854\, c\, \delta^2 - w}.$$

Therefore, if for c in each of the preceding expressions we substitute its value as determined by experiment, and which for cast iron, according to Dr. Robison, is 16648 lbs. avoirdupois upon a square inch, then we shall have

$$t = \frac{P r}{13076\, D^2 - P}, \qquad [F]$$

$$t = \frac{p r}{13076\, d^2 - p}, \qquad [G]$$

$$t = \frac{w r}{13076\, \delta^2 - w}. \qquad [H]$$

Where the constant number $13076 = 16648 \times \cdot 7854$.

The following example will illustrate the use of these equations, the value of t the thickness of the metal coming out the same by each.

Ex. 13.—What must be the thickness of metal in the cylinder of a hydrostatic press to resist a pressure of 30000 lbs., the diameter of the cylinder being 5 in., that of the forcing pump 1 in., and of the safety-valve $\frac{1}{4}$ of an inch, being the same dimensions which we have employed in the preceding examples?

Here we have given P = 30000 lbs.; D = 5 in.; and consequently, $r = 2\frac{1}{2}$ in.; therefore, by substitution, equation [F] gives $t = \frac{30000 \times 2\frac{1}{2}}{13076 \times 5^2 - 30000} = \cdot 253$ in., being something more than $\frac{1}{4}$ of an inch.

In order that the entire pressure on the piston of the cylinder may be equal to 30000 lbs. according to the conditions of the question, the force with which the plunger of the forcing pump descends must be equal to 1200 lbs.; therefore by equation [G] we have

$$t = \frac{1200 \times 2\frac{1}{2}}{13076 \times 1^2 - 1200} = \cdot 253 \text{ in., the same as before.}$$

Again, in order that the entire pressure may be equal to 30000 lbs., the weight upon the safety-valve must be 75 lbs.; hence from equation [H] we obtain $t = \frac{75 \times 2\frac{1}{2}}{13076 \times \cdot 25^2 - 75} = \cdot 253$ in., the same as in the two cases foregoing.

It may not be improper here to remark, that although the requisite thickness of metal is alike assignable from either of the above equations, when the respective pressure and diameters are known, yet it is the first of the class only, or that marked [F], which becomes available in practice, and for this reason, that the power of the press, or the aggregate pressure which it is capable of exciting, is known *a priori*, or immediately assignable from the conditions of construction, while the load upon the safety-valve, and the force with which the plunger descends, have each to be determined by calculations founded on circumstances connected with the aggregate or ultimate pressure.

Referring to equation [E], which has been purposely investigated for expressing the intensity

of pressure on a square inch of surface, and multiplying both sides by $r + t$, the denominator of the fraction, we shall have $n\,r + n\,t = c\,t$, from which, by transposing and collecting the terms, we get $(c - n)\,t = n\,r$; then by division, the value of t, or the thickness of metal in the cylinder to withstand the pressure, becomes

$$t = \frac{n\,r}{c - n}. \qquad [K]$$

From which it appears, that if a constant value adapted to practical purposes can be assigned to n, the rule for calculating the thickness of metal in the cylinder will become exceedingly simple.

Now, it has been remarked by several eminent practical engineers, as well as by the most approved and intelligent manufacturers, that the extreme pressure on a square inch of the piston should never exceed half the cohesive power of the material; but, according to Dr. Robison, the cohesive power of cast iron of a medium quality is equal to 16648 lbs.; hence we have

$$n = \frac{16648}{2} = 8324 \text{ lbs.};$$

therefore, if 8324 lbs. be adopted as the limit of pressure upon a square inch of surface, the foregoing value of t becomes $t = \frac{8324\,r}{16648 - 8324} = r$. There is no occasion to limit the pressure to the piston only, since every square inch of surface in contact with the fluid sustains the same pressure. This limitation has frequently caused a misapprehension respecting the mode of ascertaining the pressure on an inch of surface.

Consequently, in order that the strain produced by the pressure may not exceed the elastic power of the material,

The thickness of metal ought never to be less than the interior radius of the cylinder.

By the first equation of class [D] it has been shown that the pressure on a square inch of the piston in lbs. avoirdupois is $n = \frac{P}{\cdot 7854\,D^2}$, or by substituting the foregoing value of n, it is $8324 = \frac{P}{\cdot 7854\,D^2}$; from which, by multiplication, we obtain $8324 \times \cdot 7854\,D^2 = P$; but in order to express the pressure in tons, it is

$$P = \frac{6537 \cdot 6696\,D^2}{2240} = 2 \cdot 9186\,D^2. \qquad [L]$$

Therefore, when the diameter of the cylinder is given, the entire pressure in tons is determined by the following very simple rule.

RULE.—*Multiply the square of the diameter in inches by the constant number* 2·9186, *and the product will be the pressure in tons.*

And again, when the pressure in tons is given, the diameter of the cylinder may be determined by reversing the process, or by the following rule.

RULE.—*Divide the given pressure in tons by the constant number* 2·9186, *and extract the square root of the quotient, for the diameter of the cylinder in inches.*

The preceding theory, as we have developed it, unfolds every particular connected with the hydrostatic press, and by paying proper attention to the equations, rules, and examples, as we have delivered them, every difficulty attending the construction of the instrument will be removed; to practical persons, however, that part of the theory exhibited in the equations marked [K] and [L] will be found the most valuable, as they do the more immediately contain the particulars which direct their operations. The following examples will prove the truth of these remarks.

Ex. 14.—The diameter of the cylinder in a hydrostatic press is 10 in.; what is its power, or what pressure does it transmit?

Here by the first rule above, we have $P = 10^2 \times 2 \cdot 9186 = 291 \cdot 86$ tons.

Ex. 15.—What is the diameter, and what the thickness of metal, in a press of 300 tons power?

By the second rule above, we have $D^2 = 300 \div 2 \cdot 9186 = 102 \cdot 81$ nearly; therefore, by extracting the square root, we obtain $D = \sqrt{102 \cdot 81} = 10 \cdot 13$ in.; consequently, according to the remark under the equation [K], the thickness of metal is $t = 10 \cdot 13 \div 2 = 5 \cdot 065$ in.

The rules by which the preceding examples have been resolved were very nearly, but not precisely, the same as those employed by Joseph and Timothy Bramah in the construction of their excellent presses; the only difference, however, consists in their assuming a higher number as the limit of pressure, the standard which they employed being 8556 lbs. upon a square inch of the piston, thereby indicating that they reckoned on a higher cohesive power in the material than that which we have adopted as the basis of our theory.

Now, 8556 lbs. on a square inch is equivalent to 6619·8824 lbs. upon a circular inch; whereas the constant which we have chosen is only 6537·6696 lbs., being a difference of 82·2128 lbs. upon the circular inch, a difference that need not be regarded in practice, as the error will always fall on the side of safety, giving a smaller power to the press than it really possesses.

It sometimes, indeed it very frequently, happens that presses are constructed without any attention being paid to the relation which subsists between the strength of the parts and the strain which they have to resist; in all such cases, therefore, it may be interesting to possess a

rule by which the merits or demerits of a press so constructed can be ascertained, for in this way a failure in the instrument may be prevented, and a remedy applied to any defect that may exist.

Now, according to the first equation of class [D], the pressure upon a square inch is $n = \frac{P}{\cdot 7854\, D^2}$, and according to equation [E], it is $n = \frac{c\,t}{r+t}$; therefore, by comparison, we have $\frac{P}{\cdot 7854\, D^2} = \frac{c\,t}{r+t}$; consequently, by multiplying and substituting the cohesive power of cast iron, we have $(t + r)\, P = 13076\, D^2\, t$.

Let $4\, r^2$ be substituted in this equation instead of D^2, its equivalent, and we shall obtain $(t + r)\, P = 52304\, r^2\, t$; consequently the pressure in tons is $P = \frac{52304\, r^2\, t}{2240\,(t+r)} = \frac{23 \cdot 35\, r^2\, t}{(t+r)}$.

From which it appears, that by knowing the interior radius of the cylinder and the thickness of the metal, the power of the press can easily be ascertained; the following is the rule for that purpose.

RULE.—*Multiply* 23·35 *times the thickness of metal by the square of the radius of the cylinder, and divide the product by the radius plus the thickness of metal, and the quotient will give the power of the press in tons.*

Ex. 16.—A hydrostatic press is so constructed as to have the interior radius of its cylinder equal to 3 in., and the thickness of metal 4 in.; now this press is designed for packing flax, and is estimated to stand a pressure of 180 tons; query if its power is not overrated?

According to the above rule, it is $P = \frac{23 \cdot 35 \times 3^2 \times 4}{4+3} = 120 \cdot 08$ tons; consequently the power of the press is overrated by about 60 tons, being one-third less than the estimated pressure according to the question.

The thickness of metal necessary to resist a pressure of 180 tons, or 403200 lbs., is equal to 17·9 in. nearly, and the proposed thickness is only 4 in., being less than one-fourth of the thickness which is really necessary to resist the strain; hence we infer that the press in its present state is entirely unfitted for its intended purpose, and altogether inconsistent with safety and precision of operation.

The hydrostatic press, in its present state of improvement, is a machine that is capable of generating and transmitting a greater degree of force, for the purpose of overcoming immense resistances, and raising enormous loads to a small height, than any other instrument or engine with which we are acquainted; it is therefore of the highest importance that the principles of its construction and the mode of operation should be rightly understood, and in order to render the subject as clear and intelligible as possible, we think proper to lay before our readers the following detailed description.

The woodcut, Fig. 4170, exhibits an elevation of the press in its complete state, accompanied by the forcing pump and all its appurtenances as fitted up for immediate action. F is a strong metallic cylinder of cast iron, or some other material of sufficient density to prevent the fluid from issuing through its pores, and of sufficient strength to preclude the possibility of rupture, by reason of the immense pressure which it is destined to withstand.

4170.

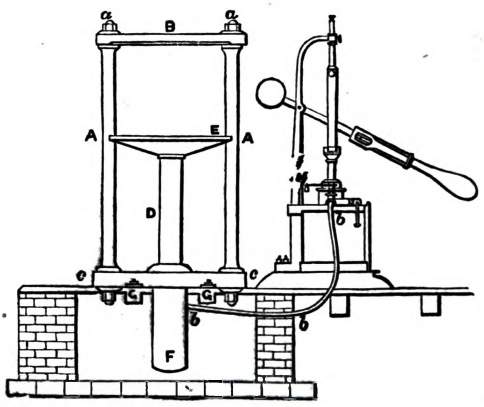

The cylinder F is bored and polished with the most scrupulous precision, and fitted with the movable piston D, which is rendered perfectly water-tight, by means of leather collars constructed for the purpose, and fixed in the cylinder by a simple but ingenious contrivance to be described hereafter.

Into this side or base of the cylinder F, the end of a small tube *b b b* is inserted, and by this tube the water is conveyed or forced into the cylinder; the other end of the tube is attached to the forcing pump, as represented in the diagram.

A A are two very strong upright bars, generally made of wrought iron, and of any form whatever, corresponding to the notches in the sides of the flat table E, which is fixed upon the end of the piston D, and by workmen is usually denominated the follower or pressing table.

B is the top of the frame into which the upright bars A A are fixed, and *c c* is the bottom thereof, both of which are made of cast, in preference to wrought, iron, being both cheaper and more easily moulded into the intended form.

The bottom of the frame *c c* is furnished with four projections or lobes, with circular perforations, for the purpose of fastening it by iron bolts to the massive blocks of wood, whose transverse sections are shown at G G. The top B has two similar perforations, through which are passed the upper extremities of the vertical bars A A, and there made fast, by screwing down the cup-nuts represented at *a* and *a*.

Fig. 4171 represents the plan of the top, or as it is more frequently termed, the head of the frame; the lower side or surface of which is made perfectly smooth, in order to correspond with, and apply to the upper surface of the pressing table E in Fig. 4170; this correspondence of surfaces

becomes necessary on certain occasions, such as the copying of prints, taking fac-similes of letters, and the like; in all such cases it is manifest that smooth and coincident surfaces are indispensable for the purpose of obtaining true impressions.

Fig. 4171 represents the upper side of the block, where it is evident that the middle part B (through whose rounded extremities *a* and *a* the circular perforations are made for receiving the upright bars or rods A A, Fig. 4170) is considerably thicker than the parts on each side of it; this augmentation of thickness is necessary to resist the immense strain that comes upon it in that part; for although the pressure may be equally distributed throughout the entire surface, yet it is obvious that the mechanical resistance to fracture must principally arise from that part, which is subjected to the reaction of the upright bars.

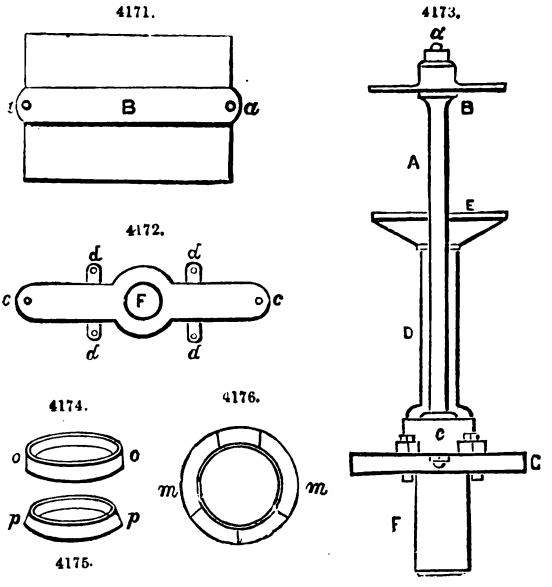

Fig. 4172 represents the plan of the base or bottom of the frame; it is generally made of uniform thickness, and of sufficient strength to withstand the pressure, for be it understood that all the parts of the machine are subjected to the same quantity of strain, although it is exerted in different ways. The upright bars, cylinders, and connecting tubes, resist by tension, the pistons by compression, and the pressing table, together with the top and bottom of the frame, resist transversely.

The circular perforations *c c* correspond to *a a* in the top of the frame, and receive the upright bars in the same manner; the perforations *d d d d* receive the screw-bolts which fix the frame to the beams of timber represented at G G, Fig. 4170; the large perforation F receives the cylinder, the upper extremity of which is furnished with a flange, for the purpose of fitting the circular swell around the perforation, and preventing it from moving backwards during the operation of the instrument.

A side view of the engine is represented in Fig. 4173, where the same letters of the alphabet refer to the same parts of the structure.

F is the cylinder into which the fluid is injected; D, the piston, on whose summit is the pressing table E; A, one of the upright rods or bars of malleable iron; B, the head of the press, fixed to the upright bar A by means of the cup-nut *a*; *c*, the bottom, in which the upright bar is similarly fixed; and G a beam of timber supporting the frame with all its appendages.

But the hydrostatic press, as here described and constructed, must not be considered as fit for immediate action; for it is manifestly impossible to bore the interior of the cylinder so truly, and to turn the piston with so much precision, as to prevent the escape of water between their surfaces, without increasing the friction to such a degree that it would require a very great force to counterbalance it.

In order therefore to render the piston water-tight, and to prevent as much as possible the increase of friction, recourse must be had to other principles, which we now proceed to explain.

The piston D is surrounded by a collar of pump-leather *o o*, represented in Fig. 4174, which collar being doubled up, so as in some measure to resemble a lesser cup placed within a greater, it is fitted into a cell made for its reception in the interior of the cylinder; and when there, the two parts are prevented from coming together by means of the copper ring *p p*, represented in Fig. 4175, being inserted between the folds, and retained in its place by a lodgment made for that purpose on the interior of the cylinder.

The leather collar, first arranged in its present form by Benjamin Hick, is kept down by means of a brass or bell-metal ring *m m*, Fig. 4176, which ring is received into a recess formed round the interior of the cylinder, and the circular aperture is fitted to admit the piston D to pass through it, without materially increasing the effects of friction, which ought to be avoided as much as possible.

The leather is thus confined in a cell, with the edge of the inner fold applied to the piston D, while the edge of the outer fold is in contact with the cylinder all around its interior circumference; in this situation the pressure of the water acting between the folds of the leather, forces the edges into close contact with both the cylinder and piston, and renders the whole water-tight; for if the leather be properly constructed and rightly fitted into its place, it is almost impossible that any of the fluid can escape; for the greater the pressure the closer will the leather be applied to both the piston and the cylinder.

The metal ring *m m* is truly turned in a lathe, and the cavity in which it is placed is formed with the same geometrical accuracy; but in order to fix it in its cell it is cut into five pieces by a very fine saw, as represented by the lines in the diagram, which are drawn across the surface of the ring. The four segments which radiate to the centre are put in first, then the segment formed by the parallel kerfs (the copper ring *p p* and the leather collar *o o* being previously introduced), and lastly, the piston which carries the pressing table.

That part of the cylinder above the ring *m m* where the inner surface is not in contact with the

piston is filled with tow or some other soft material of a similar nature; the material thus inserted has a twofold use; in the first place, when saturated with sweet oil, it diminishes the friction that necessarily arises when the piston is forced through the ring *m m*; and in the second place, it prevents the admission of any extraneous substance which might increase the friction or injure the surface of the piston, and otherwise lessen the effects of the machine.

The packing here alluded to is confined by a thin metallic annulus, neatly fitted and fixed on the top of the cylinder, the circular orifice being of sufficient diameter to admit of a free and easy motion to the piston.

If a cylinder thus furnished with its several appendages be placed in the frame, and the whole firmly screwed together, and connected with the forcing pump, as represented in Fig. 4170, the press is completed and ready for immediate use; but in order to render the construction still more explicit and intelligible, and to show the method of connecting the press to the forcing pump, let Fig. 4177 represent a section of the cylinder with all its furniture, and a small portion of the tube immediately adjoining, by which the connection is effected.

Then is F F the cylinder; D, the piston; the unshaded parts *o o* the leather collar, in the folds of which is placed the copper ring *p p*, distinctly seen but not marked in the figure; *m m* is the metal ring by which the leather collar is retained in its place; *n n*, the thin plate of copper or other metal fitted to the top of the cylinder, between which and the plate *m m* is seen the soft packing of tow, which we have described above, as performing the double capacity of oiling the piston and preventing its derangement.

4177.

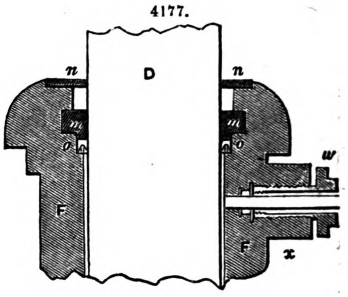

The combination at *w x* represents the method of connecting the injecting tube to the cylinder; it may be readily understood by inspecting the figure; but in order to remove all causes of obscurity it may be explained in the following manner.

The end of the pipe or tube, which is generally made of copper, has a projecting piece or socket flange soldered or screwed upon it, which fits into a perforation in the side or base of the cylinder, according to the fancy of the projector, but in the figure before us the perforation is in the side.

The tube thus furnished is forcibly pressed into its seat by a hollow screw *w*, called a union screw, which fits into another screw of equal thread made in the cavity of the cylinder; the joint is made water-tight by means of a collar of leather, interposed between the end of the tube and the bottom of the cavity.

A similar mode of connection is employed in fastening the tube to the forcing pump, the description of which, although it constitutes an important portion of the apparatus, does not properly belong to this place; the principles of its construction and mode of action must therefore be supposed as known, until we come to treat of the construction and operation of pumps in general.

Admitting therefore that the action of the forcing pump is understood, it only now remains to explain the nature of its operation in connection with the hydrostatic press, the construction of which we have so copiously exemplified.

In order to understand the operation of the press, we must conceive the piston D, Fig. 4170, as being at its lowest possible position in the cylinder, and the body or substance to be pressed placed upon the crown or pressing table E; then it is manifest that if water be forced along the tube *b b b* by means of the forcing pump, it will enter the chamber of the cylinder F immediately beneath the piston D, and cause it to rise a distance proportioned to the quantity of fluid that has been injected, and with a force determinable by the ratio between the square of the diameter of the cylinder and that of the forcing pump. The piston thus ascending carries its crown, and consequently the load along with it, and by repeating the operation more water is injected, and the piston continues to ascend till the body comes into contact with the head of the frame B, when the pressure begins; thus it is manifest that by continuing the process the pressure may be carried to any extent at pleasure; but we have already stated, in developing the theory, that there are limits beyond which, with a given bore and a given thickness of metal, it would be unsafe to continue the strain.

When the press has performed its office, and it becomes necessary to relieve the action, the discharging valve placed in the furniture of the forcing pump must be opened, which will admit the water to escape out of the cylinder and return to the cistern, while the table and piston, by means of their own weight, return to their original position.

Friction of the Collar.—There had long been a lack of trustworthy information on the friction of the leather collars in hydraulic presses, until John Hick, C.E., of Bolton, carried out a series of valuable experiments, which furnished the following results;—

The friction increases as the pressure increases.

The friction of the leathers for rams of different diameters, if the pressure to the unit of area be the same, increases in direct proportion with the diameters, or with the square roots of the respective gross loads.

The depth of the leather does not affect the friction on the ram. In several of the experiments the leathers were cut after the first trial to half the depth, and after the second trial to one-quarter the original depth, and the results, in all three cases, were practically the same. This led to the belief that the water pressing against the sides of the ram produces a friction equal to that produced by the leather to the unit of area acted upon by the water. New cylinders were therefore tried, in which double the length of ram was opposed to the pressure, and the friction was again the same. It is thus evident that the depth of the leather and the length of ram in the cylinder have very little, or practically no influence on the total friction. In fact, it appears that the

whole friction is produced just where the leather emerges from the hollowed part of the groove and begins to lean against the ram.

The experiments made with leather collars for a ram 4 in. in diameter, the leather being quite new and stiff and sparingly lubricated, show the greatest friction to be 1·55 per cent. of the pressure on the area of 12·56 sq. in., and the smallest friction as 1·07 per cent. If we take 1·5 per cent. for a 4-in. ram under these unfavourable circumstances, we are quite on the safe side. Forty-eight experiments made with leather collars used before, and well lubricated, give an average friction of 0·72 per cent. of the pressure on a ram of 4 in. diameter. In some of these experiments the friction was as high as 1 per cent., in others as low as 0·5 per cent., the variations being 0·5 per cent.

Thirty-four experiments with a ram 8 in. diameter show the friction to be, on an average, 0·395 per cent. of the pressure on the area of 50·26 sq. in. In some of these experiments the friction was as high as 0·52 per cent., whilst in others it was as low as 0·26, the variations being only about one-fourth per cent.

If we therefore take the friction of leather collars for hydraulic presses, or other hydraulic machinery in good working condition, as 1 per cent. for rams of 4 in. diameter, or as 0·5 per cent. for rams of 8 in. diameter, we may be certain that this will meet the generality of cases.

From the experiments is deduced the following formula;—$F = D \times P \times c$, in which F = total friction of leather collar; D = diameter of ram in inches; P = pressure to the square inch; C = a coefficient'; C = 0·0471 if leathers new or badly lubricated; C = 0·0314 if leathers in good condition and well lubricated. Where the pressure is given to the circular inch the formula becomes;—$F = D \times P_o \times C_o$, in which F = total friction of leather collar; D = diameter of ram in inches; P_o = pressure to the circular inch; C_o = a coefficient; C_o = 0·05 if sparingly lubricated; C_o = 0·04 if well lubricated.

It may be well to select an example or two, in order to render the foregoing perfectly clear.

First Example.—The friction of a leather collar of a 12-in. ram with a pressure of 5000 lbs. to the square inch;—$F = 12 \times 5000 \times 0{\cdot}0314 = 1884$ lbs. if well lubricated. The total pressure on a 12-in. ram is $= 113 \times 5000 = 565000$ lbs.; and the friction, as found above, $1884 \div 565000 = 0{\cdot}0033$, or one-third per cent.

Second Example.—The friction of the leather of a 5-in. ram, with 6500 lbs. pressure to the circular inch;—$F = 5 \times 6500 \times 0{\cdot}04 = 1300$ lbs. The total pressure on the 5-in. ram $= 25 \times 6500 = 162500$ lbs.; and the friction, as found above, $1300 \div 162500 = 0{\cdot}008$, or eight-tenths per cent.

The annexed Table gives, in a compact and convenient form, the frictional resistance in percentage of the total hydraulic pressure for rams from 2 in. up to 20 in. in diameter.

D, Inches.	F, per Cent.	D, Inches.	F, per Cent.	D, Inches.	F, per Cent.	D, Inches.	F, per Cent.
2	2·00	7	0·57	12	0·33	17	0·23
3	1·33	8	0·50	13	0·30	18	0·22
4	1·00	9	0·44	14	0·28	19	0·21
5	0·80	10	0·40	15	0·26	20	0·20
6	0·66	11	0·38	16	0·25		

FRICTION OF LEATHER WASHER FOR RAM ½ IN. DIAMETER.

Leather Washer, new and stiff.			Leather used before.		Second Leather.	
Gross Load on Ram ¼ in. diam.	Friction of Washer.	Friction in percentage of Gross Load.	Friction in lbs.	Friction in percentage.	Friction in lbs.	Friction in percentage.
lbs.	lbs.					
50	13	26·0	9·0	18·0	9	18·0
100	12·5	12·5	8·5	8·5	13	13·0
150	18	12·0	11·5	7·6	15	10·0
200	20	10·0	13	6·5	20	10·0
250	23	9·6	13·5	5·4	23	9·6
300	27	9·0	14·7	4·9	27	9·0
350	18	5·1	15·4	4·4	29	8·2
400	23	5·6	16·5	4·1	31	7·7
450	26	5·7	18	4·0	34	7·5
500	25	5·0	19	3·8	37	7·4
600	26	4·3	20	3·3	38	6·3
700	32	4·5	23·3	3·3	44	6·2
800	38	4·7	24	3·0	45	5·6
900	35	3·9	28	3·1	48	5·3
1000	33	3·3	33	3·3	48	4·8
1100	40	3·6	35·2	3·2	48	4·3
1200	50	4·1	40·8	3·4	50	4·1
1300					50	3·8

FRICTION OF LEATHER COLLAR FOR RAM 4 IN. DIAMETER. LEATHER NEW AND STIFF; SPARINGLY LUBRICATED.

Net Pressure on ¼-in. Ram.	Equivalent Pressure a square inch.	Pressure on 4-in. Ram.	Friction of Leather in lbs.	Friction in percentage of Load.
lbs.	lbs.	lbs		
37	188·7	2,368	110	4·6
87·5	446·2	5,600	117	2·0
132	673·2	8,448	125	1·48
180	918	11,520	130	1·12
227	1157·7	14,528	171	1·17
273	1392·3	17,472	214	1·22
332	1693·2	21,248	228	1·07
377	1922·7	24,128	280	1·16
424	2162·4	27,136	334	1·23
475	2422·5	30,400	389	1·27
574	2927·4	36,736	459	1·25
668	3406·8	42,752	543	1·26
762	3886·2	48,768	641	1·31
865	4411·5	55,360	753	1·36
967	4931·7	61,888	823	1·33
1060	5406	67,840	1047	1·54
1150	5865	73,600	1147	1·55
		Average percentage of 15 =		1·28

FRICTION OF LEATHER COLLAR FOR RAM 4 IN. DIAMETER. LEATHER WELL LUBRICATED.

Depth of Leather touching Ram.			¼-in.		½-in.		¾-in.	
Net Pressure on 4-in. Ram.	Equivalent Pressure a square inch.	Pressure on 4-in. Ram.	Friction of Leather in lbs.	Friction in percentage of Load.	Friction of Leather in lbs.	Friction in percentage of Load.	Friction of Leather in lbs.	Friction in percentage of Load.
lbs.	lbs.	lbs.						
41	209·1	2,624	56	2·13	37	1·40	39	1·50
87	443·7	5,568	70	1·25	52	0·94	70	1·25
135	688·5	8,640	80	0·95	78	0·91	80	0·92
180	918·0	11,520	84	0·72	100	0·87	85	0·73
227	1157·7	14,528	88	0·60	116	0·80	92	0·63
273	1392·3	17,472	93	0·53	162	0·92	105	0·60
321	1637·1	20,544	103	0·50	174	0·84	125	0·60
369	1881·9	23,616	123	0·52	189	0·80	140	0·59
419	2136·9	26,816	140	0·52	214	0·79	154	0·57
463	2361·3	29,632	156	0·52	226	0·76	168	0·56
562	2871·2	35,968	176	0·49	244	0·67	180	0·50
651	3320·1	41,664	231	0·55	280	0·67	231	0·55
755	3850·5	48,320	312	0·64	374	0·77	280	0·58
852	4345·2	54,528	335	0·61	420	0·77	305	0·56
952	4855·2	60,928	375	0·61	493	0·81	360	0·59
1052	5365·2	67,328	432	0·63	558	0·83	390	0·58
1150	5865·0	73,600	520	0·70				
1250	6375·0	80,000	660	0·75				
Average percentage of 16 =				0·61		0·846		3·706

FRICTION OF LEATHER COLLAR FOR RAM 8 IN. DIAMETER.

			Leather new and sparingly lubricated.		Leather used before, well lubricated.	
Net Pressure on 4-in. Ram.	Equivalent Pressure a square inch.	Pressure on 8-in. Ram.	Friction in lbs.	Friction in percentage of Load.	Friction in lbs.	Friction in percentage of Load.
lbs.	lbs.	lbs.				
87	443·7	22,272	102	0·46	94	0·42
135	688·5	34,560	162	0·47	145	0·42
180	918·0	46,080	207	0·45	180	0·39
227	1157·7	58,112	255	0·44	186	0·32
273	1392·3	69,888	321	0·46	216	0·31
321	1637·1	82,176	385	0·47	271	0·33
369	1881·9	94,464	415	0·44	274	0·29
419	2136·9	107,264	547	0·51	290	0·27
463	2361·3	118,528	569	0·48	355	0·30
562	2871·2	143,872	690	0·48	374	0·26
651	3320·1	166,656	866	0·52	433	0·26
755	3850·5	193,280	889	0·46	560	0·29
852	4345·2	218,112	1047	0·48	590	0·27
952	4855·2	243,712	1121	0·46	682	0·28
1052	5365·2	269,312	1320	0·49	862	0·32
1150	5865·0	294,400	1475	0·50	942	0·32
1250	6375·0	320,000	1600	0·50	1056	0·33
Average percentage of 17 =				0·474		0·316

Portable Hydraulic Press.—Fig. 4178 shows a section of an improved hydraulic hand-press, by Gwynne and Co., Essex Street Works, London. This press can be used for expressing oil from linseed, rape, cotton, colza, poppy, or other seeds, and is a very convenient arrangement, well suited for India and the colonies. The machine consists of a cylinder 7 in. diameter, with 1-inch ram. On the top of the ram is cast a receiver with a lip, into which the oil runs after being pressed out of the seeds. The top of the ram is also fitted with an arrangement for taking two boxes; much time is thus saved by filling one while the other is under pressure.

4178.

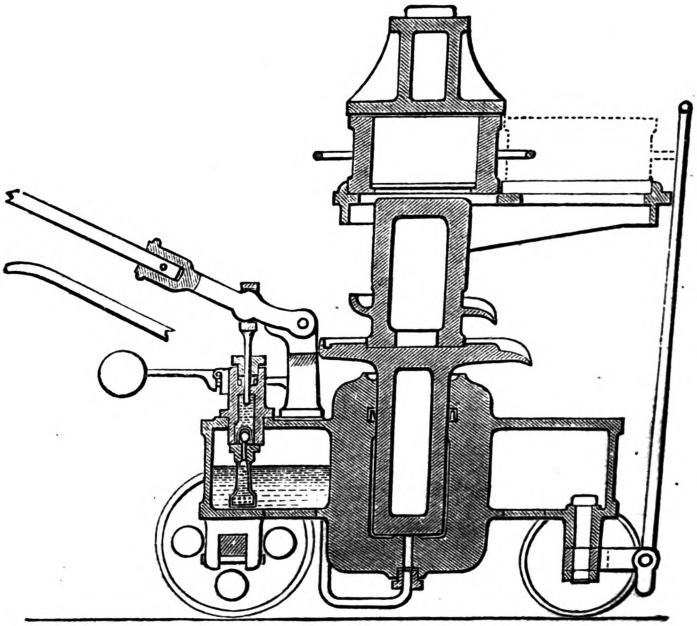

The ram is worked by a small hydraulic pump of gun-metal, fitted on to the tank, which also forms the base of the press. The pump is fitted with pressure-gauge and self-acting safety-valve; the lever handle is made in two pieces for convenience of travelling, and the machine is rendered portable by being erected upon a carriage fitted with wheels and handle. The weight of the whole is about 16 cwt.; it will give a pressure of about 60 tons, and, with one press-box, will press about 1½ bushel of seed an hour.

Hydrant.—A hydrant is a pipe or spout at which water may be drawn from the mains of an aqueduct; it is, in fact, a large water-plug. Fig. 4179 is a section of one of the hydrants used in the city of Brooklyn, U.S. Upwards of eight hundred hydrants are in use in that city, distributed

over 120 miles of pipes. Although the diameter of these pipes varied from 6 to 36 in., 4-in pipes were exclusively used to connect the hydrants with the street pipes.

Fig. 4180 relates to a simply-constructed hydrant invented by Wm. Kearney, Union Township, N.J. A B is the case; O, a sliding disc-valve perforated at S; F, screw stem; H, the nozzle;

4179.

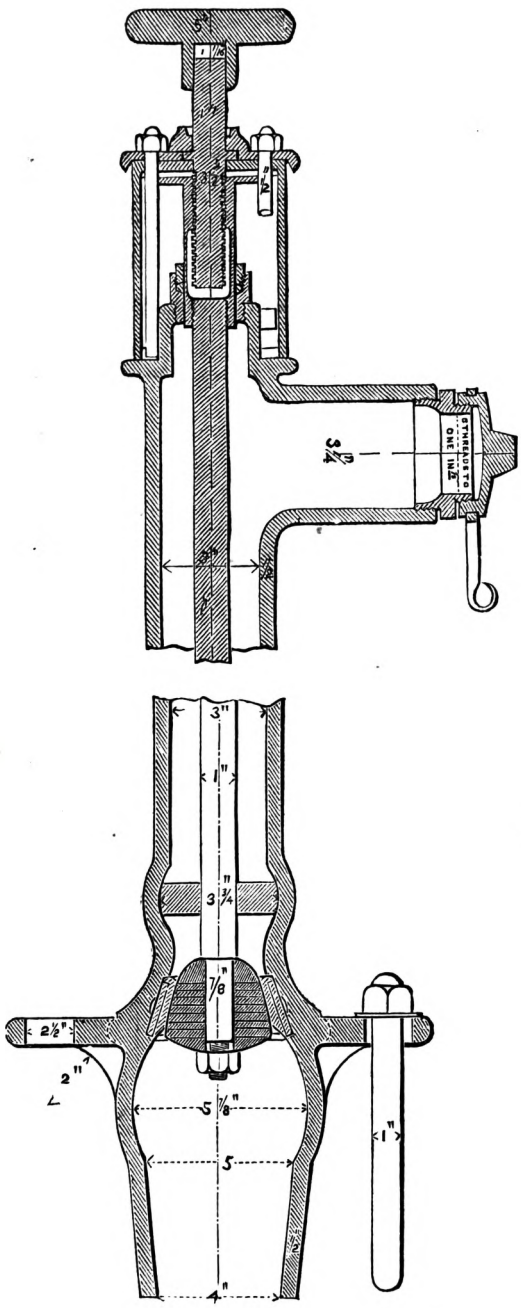

4180.

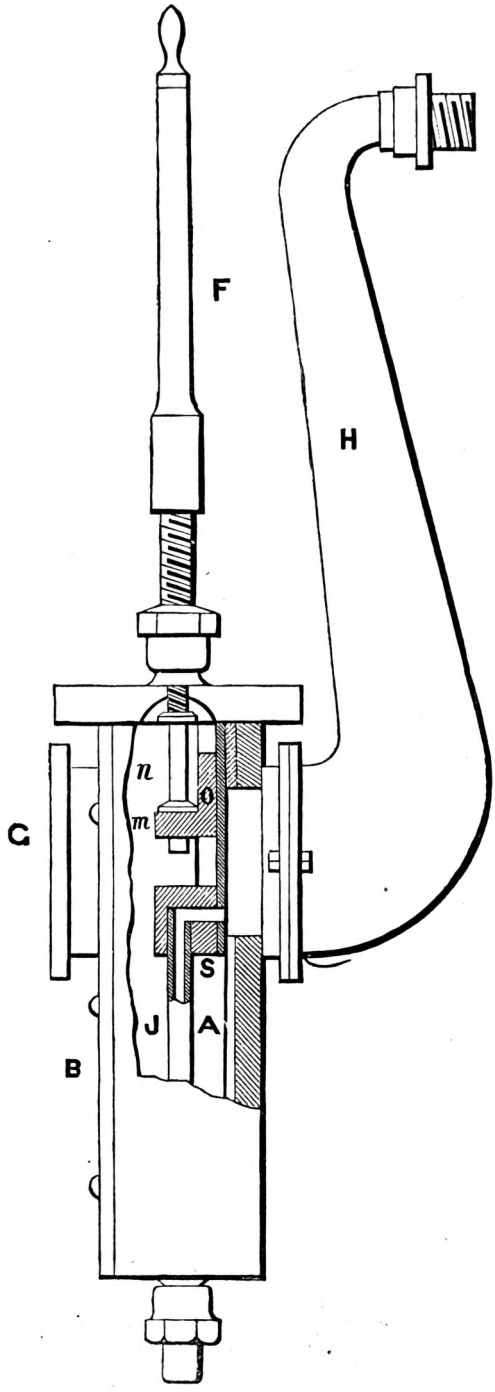

J, discharge-pipe; *n*, valve-rod; G *m*, supply-pipe. The valve O is operated by means of the screw stem, which admits the water, while a cavity on the lower edge opens a communication between the discharge and waste pipes.

See AIR-CHAMBER. CROWBAR. DRAINAGE. ENGINES, VARIETIES OF. PUMPS AND PUMPING ENGINES.

Works relating to Hydraulics and Hydraulic Machines:—'Raccolta d'Autori che trattano del moto dell'acque,' 8 vols., 4to, Firenze, 1765–70. Bossut (C.), 'Traité Théorique et Expérimentale d'Hydrodynamique,' 2 vols., 8vo, Paris, 1796. Dubuat, 'Principes d'Hydraulique,' 3 vols., 8vo, Paris, 1816. 'Hydrodynamics,' from the 'Encyclopædia Metropolitana,' 4to, 1829. Poncelet et Lesbros, 'Expériences Hydrauliques sur les Lois de l'Écoulement des Eaux,' 4to, 1832. Jamieson (A.), 'Mechanics of Fluids for Practical Men,' 8vo, 1837. Moseley (H.), 'Treatise on Hydrostatics and Hydrodynamics,' 8vo, 1847. Boileau (P.), 'Traité de la Mesure des Eaux Courantes,' 4to, 1854. Ewbank (T.), 'Descriptive and Historical Account of Hydraulic Machines,' 8vo, New York, 1856. D'Arcy (H.), 'Recherches Expérimentales relatives au Mouvement de l'Eau dans les Tuyaux,' 2 vols., 4to, 1857. D'Aubuisson de Voisins, 'Treatise on Hydraulics,' translated by J. Bennett, royal 8vo, New York, 1858. Neville (J.), 'Hydraulic Tables,' 8vo, 1860. Downing (C.), 'Elements of Practical Hydraulics,' 8vo, 1861. Beardmore (N.), 'Manual of Hydrology,' 8vo, 1862. Dupuit (J.), 'Études Théoriques et Pratiques sur le Mouvement des Eaux,' 4to, 1863. Morin (A.), 'Machines et Appareils destinés a l'Élévation des Eaux,' 8vo, 1863. Morin (A.), 'Hydraulique,' 8vo, 1865. D'Arcy et Bazin, 'Recherches Hydrauliques,' 4 vols., 4to, 1865–66. Francis (J. B.), 'Lowell Hydraulic Experiments,' 4to, New York, 1868. Box (T.), 'Practical Hydraulics,' crown 8vo, 1870. Cullen (W.) 'On the Turbine,' 4to, 1871. Armengaud, aîné, 'Traité des Moteurs Hydrauliques,' 2 vols., 4to, Paris. See also Sganzin, 'Cours de Construction;' Robison's 'Mechanical Philosophy;' Prechtl, 'Technologische Encyklopädie,' article "Hydraulic;" Wiesbach, 'Lehrbuch der Ingenieur' (chapter on Hydraulics), Brunswick, 1863.

HYDROMETER. Fr., *Hydromètre;* Ger., *Hydrometer;* Ital., *Idrometro;* Span., *Hidrómetro.* See Saccharometer.

HYGROMETER. Fr., *Hygromètre;* Ger., *Hygrometer;* Ital., *Igrometro;* Span., *Higrómetro.*

A hygrometer is an instrument for measuring the degree of moisture of the atmosphere. It is principally used for meteorological purposes, but it is also of great service in determining the degree of humidity of the air in certain manufactories and in conservatories. The form of the instrument employed for this purpose is known as Mason's Dry- and Wet-Bulb Thermometer, Fig. 4181, which consists of two thermometers, as nearly as possible identical, the one marked dry, the other wet. The bulb of the wet thermometer is covered with thin muslin, round the neck of which and over the muslin is twisted loosely, or tied in a loose knot, a conducting thread of lamp-wick, common darning-cotton, or floss silk; this passes to an adjacent vessel of water placed at such a distance as to allow a length of conducting thread of about three inches. The reservoir of water should be placed on one side and a little beneath, so that evaporation from the water may not affect the reading of the dry bulb by its too near vicinity. Before use, the cotton lamp-wick should be washed in a solution of carbonate of soda, and pressed whilst under water throughout its length. In use it should be of such extent that the water conveyed be sufficient in quantity to keep the muslin on the bulb as moist as when the air is saturated with vapour. The amount of water supplied can be increased or diminished by increasing or decreasing the extent of the conducting thread. The temperatures of the air and of evaporation are given by the readings of the two thermometers.

4181.

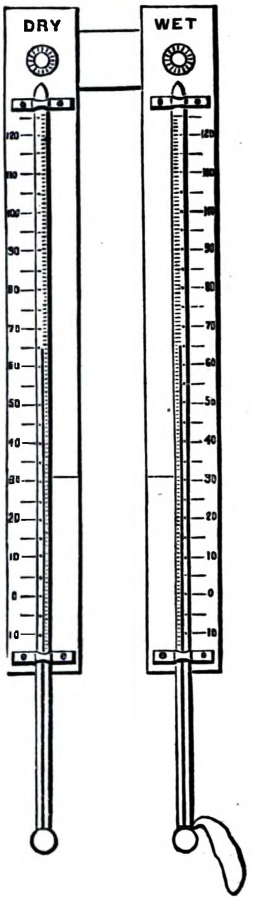

ICE-MAKING MACHINE. Fr., *Congelateur;* Ger., *Eismaschine;* Ital., *Macchina da far ghiaccio.*

Ice acts as a cooling agent in virtue of the physical fact that, in common with all solid substances, it requires an expenditure of heat for its conversion into the liquid state. The heat thus applied does not produce any elevation of temperature, but as the ice melts it disappears, so far as the indications of the thermometer will show, and there remains a quantity of water of the same temperature as the ice itself. Thus when ice or snow is mixed with three-fourths its weight of boiling water, the water remaining after the ice has melted has a temperature of 32° Fahr., the same as the ice itself; the quantity of heat in the boiling water, corresponding to the interval of temperature between 32° and 212° Fahr., having been rendered latent, or expended in effecting the liquefaction of the ice. It is in this way that ice cools water, air, or any other substance it is brought in contact with which has a temperature higher than 32° Fahr. Hence refrigeration is simply a manipulation of heat. It is an operation in this respect perfectly analogous to the production of a high temperature, in so far as both processes consist in the transfer of heat from one substance to another, and are subject to the same general laws. They are, however, reverse processes. Thus in generating steam, heat produced by the combustion of fuel is communicated to water. In making ice, on the contrary, heat is abstracted from water, and in this process the water which is cooled corresponds to the fuel burnt in generating steam, or in converting any other substance into vapour. Just in the same way that the fuel in burning yields its heat to the substance vaporized, so does the water, in making ice, yield its heat to some other substance capable of receiving it.

This is the nature of the work to be done in making ice, and it is now necessary to consider the amount of that work requisite for producing a given quantity of ice.

Water at the temperature of 60° Fahr. contains an amount of heat greater than that contained in an equal weight of ice at 32° Fahr. to the extent of 170·65 heat units for each pound, con-

sequently to convert water at 60° Fahr. into ice, it is necessary to abstract that amount of heat from it. Thus to produce a ton of ice the quantity of heat to be abstracted from water at 60° Fahr. amounts to

Heat units. lbs.
382256 = 2240 × 170·65.

This is a quantity of heat not more than about one-eightieth part of that capable of being generated by the combustion of a ton of ordinary coal.

The means by which this amount of heat may be abstracted from water consist in producing some physical change involving an expenditure of heat, and doing this in such a way that the heat required for, and applied to that purpose, is abstracted from the water to be cooled and frozen. The conversion of any substance into vapour is a change of this kind, which involves an expenditure of heat similar to that taking place in the melting of ice. The amounts of heat thus absorbed by various substances in vaporizing are as follows;—

	Latent heat a lb. Heat units.	Authority.
Water	966·1	Regnault.
Liquid ammonia	900·0	Favre and Silbermann.
Alcohol	364·3	Andrews.
Ether	162·8	Andrews.

The amount of heat thus disposed of and rendered latent in the formation of steam from water is considerably greater than that existing in the latent condition in liquid water, or, what amounts to the same thing, that expended in melting ice; but the vaporization of water cannot be applied as a means of refrigeration to any great extent, because under the ordinary atmospheric pressure it does not take place readily or with sufficient rapidity at temperatures much below the normal boiling-point, or 212° Fahr., and even when the pressure is removed by means of an air-pump, the vaporization of water proceeds very slowly at low temperatures. There are, however, other substances which vaporize readily under these conditions; and, for this reason, they are specially suited for artificial refrigeration, although the amounts of heat expended and rendered latent in their vaporization are less than in the case of water. Ether, alcohol, and liquid ammonia are substances of this kind; and, according to the foregoing data, expressing the latent heat of their vapours, the quantities of each of these substances which would have to be vaporized, in order to produce a ton of ice from water at 60° Fahr., or to produce a refrigeration equivalent to the melting of a ton of ice, would be;—

	lbs.
Ether	2348·009
Alcohol	1049·272
Liquid ammonia	424·728

From this comparison it will be seen that the expenditure of heat accompanying the vaporization of liquid ammonia is much greater than it is in the case of alcohol or ether, and that in this respect it is the most powerful as a refrigerating agent. But the amount of heat rendered latent in the vaporization of any substance is not the chief point which determines its efficiency as a refrigerating agent. The degree of facility with which a substance vaporizes at low temperatures is of still greater importance, as will be evident from the following Table, which gives the tension of the vapours at different temperatures below the boiling-points of the liquids under normal atmospheric pressure.

		Ammonia.	Ether.	Alcohol.	Water.
Normal Boiling-point.		28°	95°	172°	212° F.
Tension of vapour in inches of mercury at	° Fahr.	inches.	inches.	inches.	inches.
	104	463·64	35·81	5·26	2·16
	68	254·61	17·06	1·75	·68
	50	181·58	11·28	·96	·36
	32	124·52	7·22	·50	·18
	− 4	55·03	2·66	·13	
	− 40	20·81			
	− 109	9·45			

Since the tension of a vapour at any temperature is the measure of the facility with which the liquid evaporates at that temperature, it will be seen from the data in this Table that in this respect there is a very considerable difference between the liquids there named. Here, again, the characters of liquid ammonia are such as to give it a marked precedence over all the other liquids, as a refrigerating agent, by reason of its relative capability of vaporizing at very low temperatures. This substance is in fact gaseous under normal pressure, within the ordinary range of atmospheric temperature, the boiling of the liquid being many degrees below the zero of Fahrenheit's scale; and at ordinary temperatures it requires a pressure of from eight to ten atmospheres—117 to 150 lbs. a square inch—to maintain it in the liquid state.

Alcohol, although it has a greater capability than ether of absorbing heat in vaporizing, is still inferior to ether as a refrigerating agent, on account of its being much less readily vaporized at low temperatures: and even ether evaporates so slowly at temperatures much below its normal boiling-

point, that it can be used for refrigerating only with the aid of an air-pump to maintain the requisite rate of vaporization.

Liquid ammonia is therefore by far the most efficient material to use for this purpose, not only on account of its ready vaporization at low temperatures, but also because its power of absorbing heat in that change is but little inferior to that of water.

Another process, in which heat is expended and rendered latent, is the expansion of air. The amount of heat thus absorbed is at the rate of ·069, or about $\frac{1}{14}$th of a heat unit for each pound of air expanded to the extent of ·002035, or about $\frac{1}{490}$th of its volume at 32° Fahr. under normal pressure. If therefore air be compressed, say to one-tenth of its bulk, and, after being cooled to a low temperature, it be allowed to expand in such a way as to perform mechanical work, such as moving a piston, there is an expenditure of heat proportional to the resistance overcome and to the degree of expansion. Consequently the temperature of the gas is reduced during the act of expansion, and this effect may be taken advantage of for purposes of refrigeration. The chief disadvantage of this method consists in the great expenditure of power requisite for compressing the air, which involves a large consumption of fuel.

From what has been stated, it will be apparent that at present the choice of a refrigerating agent for producing ice or great degrees of cold lies between ammonia, ether, and air, and that ammonia presents the greatest advantages for this purpose.

The expansion of compressed air appears to have been the means first adopted for making ice, by Dr. Gorrie, of America; and in this country ether was the material employed in one of the earliest ice-making machines invented by Harrison, in 1856.

The fundamental principles on which this apparatus was constructed were correct, but there appears to have been several serious errors made in their application, and the plan did not come into use in this country. The ether machine was afterwards improved by Messrs. Siebe in 1862, and they have since employed themselves specially to the manufacture of these ice machines. Most of those which have been made were for India and other hot climates, where it has been found more advantageous to make ice by artificial refrigeration than to import it from America, owing to the large amount of waste by melting during the voyage through warm latitudes.

In the year 1860 another apparatus was invented by M. Carré, of Paris, in which a very strong solution of ammonia was used as the refrigerating agent. The arrangements of this apparatus provided for the condensation of the ammonia vaporized in the refrigerator, in such a way that it was used over and over again, and the operation of the apparatus was continuous, as in the case of the ether machine. Fig. 4182 represents this apparatus. A strong, vertical boiler, A, is charged with a concentrated solution of ammonia, to which heat is applied under a pressure of 100 to 135 lbs. the square inch, and the mixture of gaseous ammonia and steam produced passes off through an ascending coil of pipe, B, attached to the upper end of the boiler, into a tubular condenser, D, surrounded by cold water, where the distillate is cooled and liquefied under the pressure above stated. The condensed liquid collects in a receiver, *z*, and thence passes by the pipe *e'* into the refrigerator F at a rate which is regulated by a special contrivance.

4182.

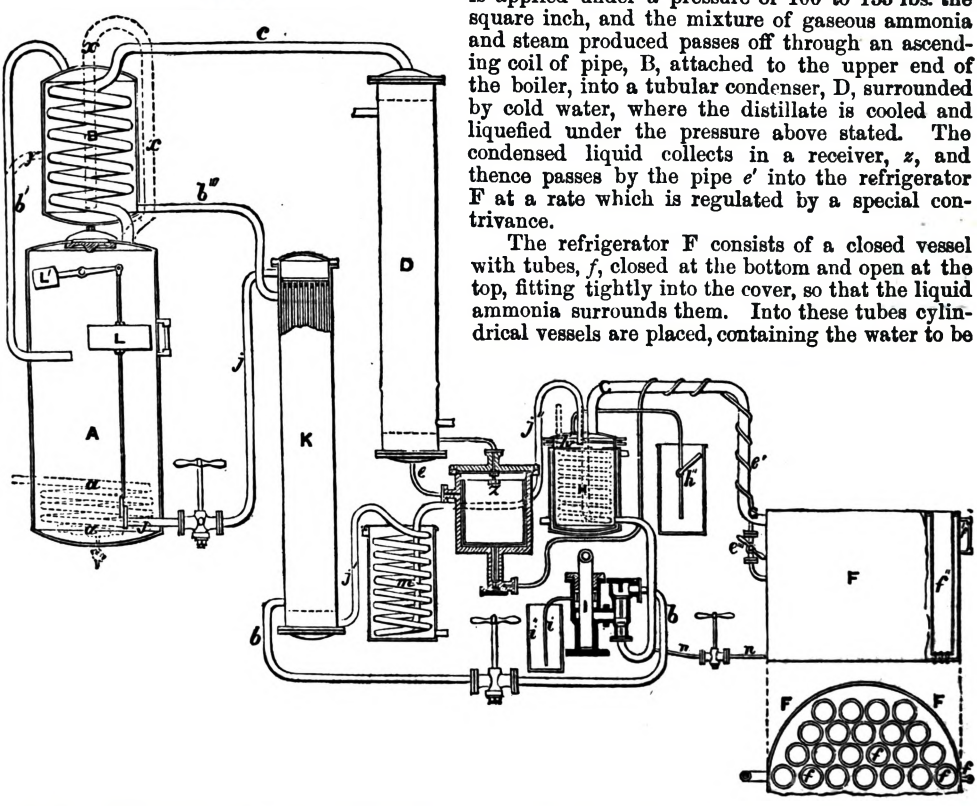

The refrigerator F consists of a closed vessel with tubes, *f*, closed at the bottom and open at the top, fitting tightly into the cover, so that the liquid ammonia surrounds them. Into these tubes cylindrical vessels are placed, containing the water to be frozen. The upper end of the refrigerator is connected by means of a pipe, G, with a vessel, H, within which the gaseous ammonia discharged from the refrigerator comes in contact with a continuous supply of cold water, and is thereby absorbed, while the solution of ammonia produced is removed from the bottom of the vessel H by the pump I. In this way the gaseous ammonia is

removed from the refrigerator and the pressure kept so low that the liquid ammonia is vaporized continuously, thereby abstracting heat from the contents of the tubes *f*.

The solution of ammonia produced in the absorber H is forced by the pump I through the pipe *b* into the outer casing of a tubular vessel, K, called the regenerator, through the tubes of which hot water exhausted of ammonia flows in the opposite direction from the boiler A. Here an interchange of temperature takes place, the solution of ammonia becoming heated while the exhausted liquor is cooled. The solution of ammonia thus heated then passes on into the closed vessel above the boiler and containing the coil B, where it is still further heated, while the gaseous ammonia and steam within the coil B are partially cooled and condensed, and it then flows by the pipe *b'* into the boiler A, to serve for a repetition of the process.

The hot liquor exhausted of ammonia meanwhile flows from the boiler in a regulated current through the pipe J into the tubes of the regenerator K, thence through a cooling worm, *m*, surrounded by water, where its temperature is sufficiently reduced, and then passes into the absorber H, furnishing the supply of water for dissolving the ammonia as already described.

This machine has been largely used in the south of France for effecting the crystallization of salts by cooling, and several have been sent out to India for making ice.

In 1862 A. C. Kirk invented a machine in which the alternate compression and expansion of air was applied as the means of refrigeration. The arrangement of the machine was very good; but for making ice it was expensive, on account of the relatively large expenditure of power required. Kirk has, however, recently introduced another form of his machine, which seems better adapted to refrigerate economically.

4183.

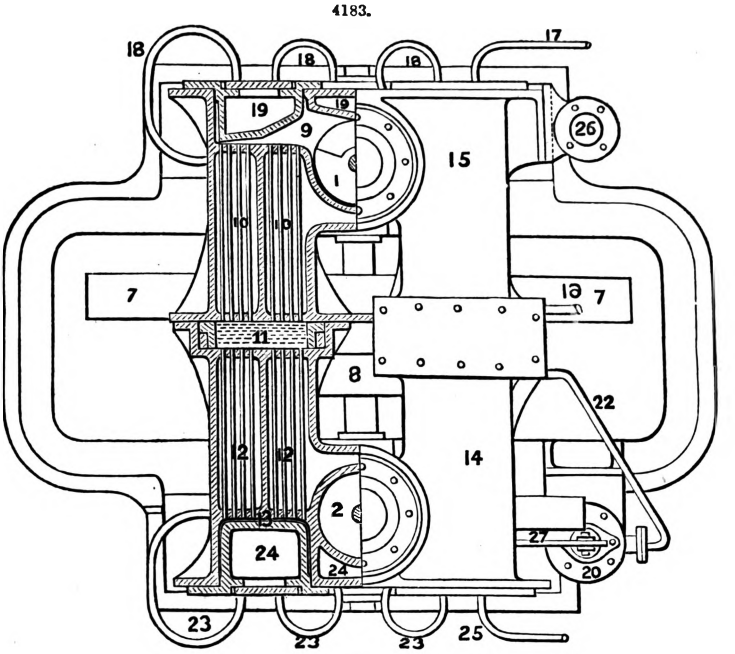

4184.

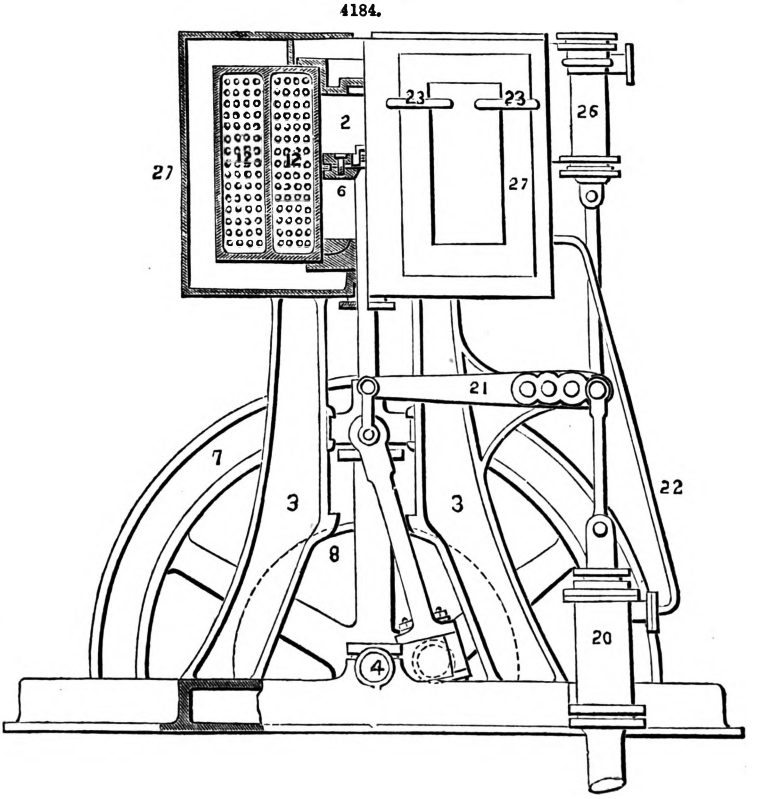

Fig. 4183 is a plan partly in horizontal section, Fig. 4184 an end elevation partly in vertical section, of this improved apparatus. It comprises two vertical cylinders 1, 2, each formed in the same casting, with casings containing accessory spaces and passages, and mounted in an inverted position on frame standards 3 over the crank shaft 4, by which their pistons 6 are actuated through connections of a common kind. The shaft 4 is fitted with a fly-wheel 7 and with a pulley 8, the latter receiving a driving belt from a convenient prime mover. The cylin-

ders 1, 2, have ports at both ends, and one half of Fig. 4183 represents the section as at the level of the lower ports, but only the port 9 of one cylinder 1 is seen, as the lower port of the other cylinder 2 is at the other side. From the bottom of cylinder 1 the air can pass through the port 9, thence through a set of tubes 10 to a regenerator 11, the other side of which communicates through a second set of tubes 12 with a space 13 having at its upper end a port leading into the top of the other cylinder 2. This space 13 is very narrow at the level of the section, but increases in width upwards. The bottom of cylinder 2 communicates through similar parts in the casings 14, 15, with the top of cylinder 1. The spaces crossed by the tubes 10 and those in the casing 15 are occupied and traversed by the water or other liquid used to abstract heat from the compressed air, such water entering by a pipe 16, and being discharged by a pipe 17, first however being led by means of pipes 18 through spaces 19 formed at the outer sides of the cylinder ports 9. A pump 20 worked by a lever 21 connected to one of the piston-rod slide-blocks is used for forcing the liquid to be cooled through the apparatus, and this liquid passes by a pipe 22 into the casing 14 crossed by tubes, passing thence to the space crossed by the tubes 12, and through pipes 23 and spaces 24 to the outlet-pipe 25, it being preferable to employ in the apparatus air which in its most expanded state therein is of a greater than atmospheric pressure. A force-pump 26 is provided for forcing in air to compensate for any leakage, being arranged to be worked by means of a lever connected to one of the piston-rod slide-blocks. The pipes for leading the air from the pump to the interior of the apparatus are not shown, but may be arranged in any convenient way in communication with the top and the bottom of either cylinder, provision being made as usual for drying the air so forced in. The cylinder 2 and the parts in connection with it in which the compressed air expands are shown in Fig. 4184 as enclosed in an outer casing 27, to prevent as far as possible the communication of heat from the atmosphere, and the jacket space enclosed by this casing is to be filled with any suitable non-conducting substance.

An improved form of the ammonia apparatus, which comprises some novel features of very great importance in regard to the use of that material for refrigeration, was invented by Mr. Reece in 1867. The arrangement of this apparatus is shown by Fig. 4185. The boiler A is charged

4185.

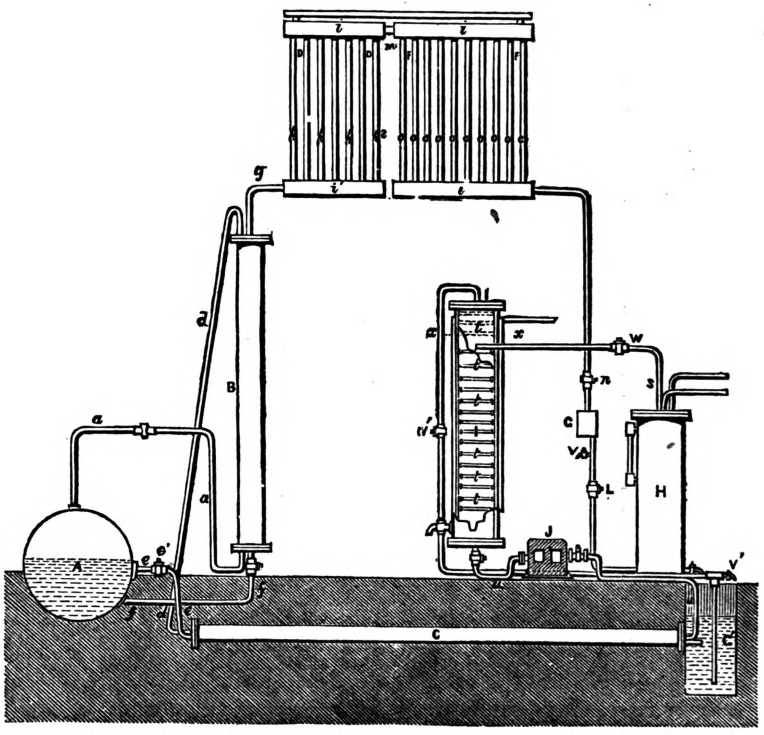

with water or a very weak solution of ammonia, and the steam, discharged under a pressure of 100 lbs. to the square inch, passes by the pipe *a a* to the bottom of a Coffey's analyzer B, consisting of a tall columnar vessel with a series of plates arranged one above the other inside. Into the top of this vessel a concentrated solution of ammonia is pumped continuously, and in descending from plate to plate it meets the ascending current of high-pressure steam, the effect of their contact being to convert the ammonia into gas, while the steam is condensed and flows back again to the boiler A. The gaseous ammonia passes out of the analyzer by the pipe *g* into a tubular rectifier D D, where the remaining steam is condensed and separated, while the ammonia passes on through a condenser F F, where it is liquefied, and then flows through a pipe to the refrigerator H, the supply being regulated by a cock *n*.

Meanwhile a regulated current of spent liquor passes from the boiler into a long tube, C, called the heater, fitted with an internal set of tubes, through which the concentrated solution of

ammonia is forced by the pump J into the top of the analyzer. By this means the solution of ammonia is heated, and at the same time the hot liquor from the boiler is sufficiently cooled to be supplied to the absorber I, into which it is forced by the pressure of the boiler, through the pipe x, fitted with a cock w, to regulate the supply. In the absorber I this water becomes saturated with gaseous ammonia discharged from the refrigerator H, and the resulting strong solution of ammonia is then pumped out into the analyzer.

The important feature of this arrangement consists in the application of the analyzing column B, and the rectifier D D, by which it is intended that the dehydration of the ammonia should be carried so far that the condensed liquid passing into the refrigerator may be practically free from water, while in Carré's apparatus the liquid supplied to the refrigerator contains 25 per cent. of water, and only 75 per cent. of actual ammonia.

Many attempts have been made to utilize for the production of cold the well-known principle of the lowering in temperature of a gas, air for example, when it dilates in exercising an exterior pressure. The comparative failures of these attempts have been caused by the insufficiency of the means employed to destroy the heating of the air occasioned by its compression, for this is the great difficulty to be overcome before the principle can be made use of.

4186.

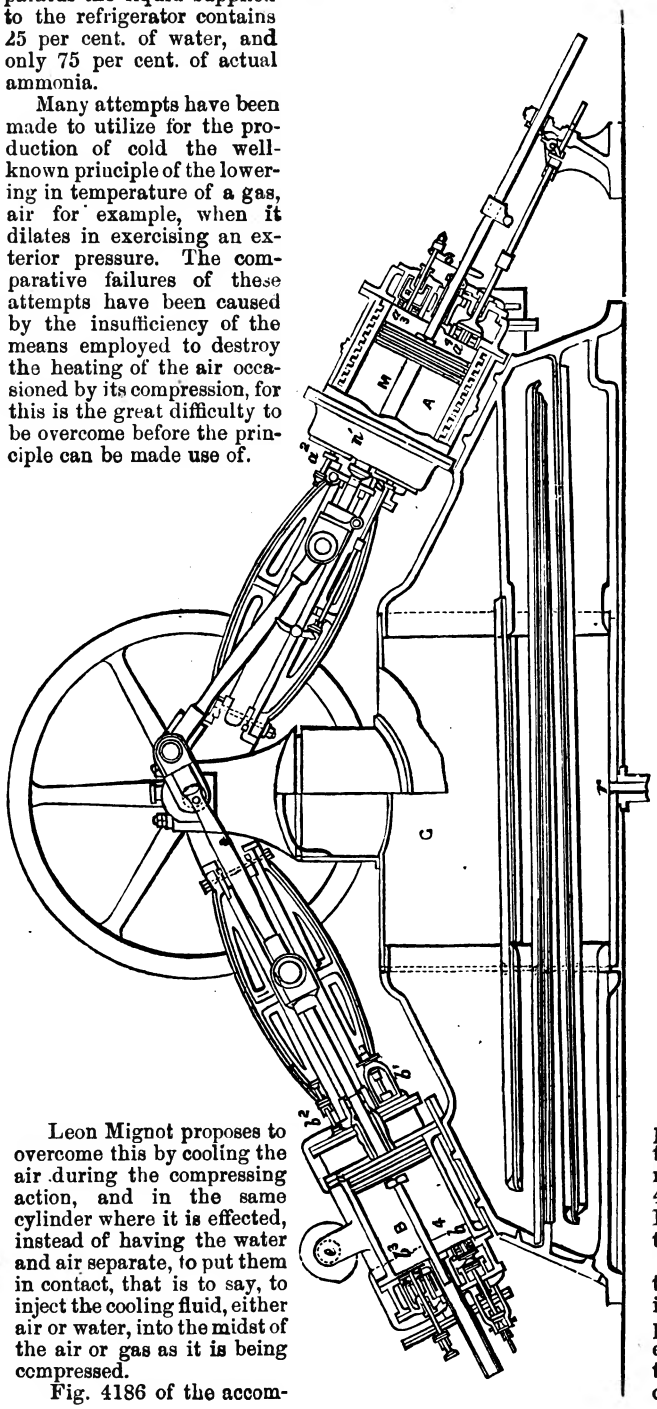

4187.

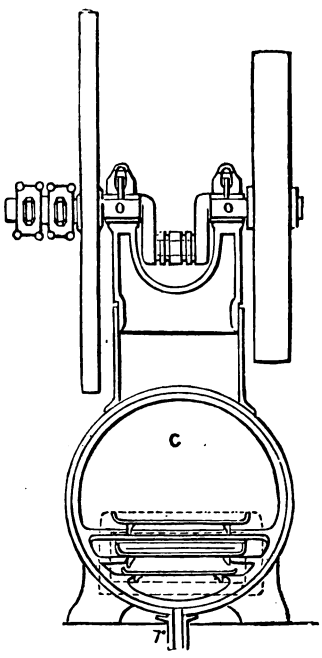

4188.

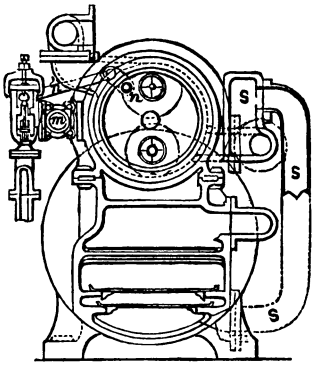

Leon Mignot proposes to overcome this by cooling the air during the compressing action, and in the same cylinder where it is effected, instead of having the water and air separate, to put them in contact, that is to say, to inject the cooling fluid, either air or water, into the midst of the air or gas as it is being compressed.

Fig. 4186 of the accompanying drawings is a longitudinal section of Mignot's ice-making machine; Figs. 4187, 4188, transverse sections; and Fig. 4189 an enlarged section of the compression cylinder A.

The air receptacle G forms the base of the whole machine; it supports at its ends the compression cylinder A, and the expansion cylinder B, and at the centre the supports of the crank-shaft O, the centre por-

tion of which receives the rods of both cylinders. Each of the cylinders is double-acting, that is to say, they aspire and throw back from both sides of their pistons P and Q; they are provided with valves a^1, a^2, a^3, a^4, serving for the suitable distribution of air for the compression cylinder A, and b^1, b^2, b^3, b^4, for the expansion cylinder B. The valves are formed of metal discs provided with a copper ring, cut in such a manner as to close the orifice, following a circumferential line of contact. The valves are worked by rods actuated by forked arms, commanded in the case of the compression cylinder by butting-pieces fixed to the piston-rod, and in the case of the expansion cylinder by eccentrics fastened on the main shaft. The compression cylinder A draws the air through its two aspiration valves a^1, a^2, and throws it out through its two other valves a^3, a^4; against this cylinder the injection arrangement is fitted for the cooling of the air in proportion to its compression. It is simply composed of a pump M, the piston m of which, actuated by a rod united to the principal crank, sends the cold water through one of two pipes n and n^1 into the part of the cylinder where the compression takes place. The mixture of compressed air and water without being heated proceeds by one of the outlet-valves a^3 or a^4, and enters into the receptacle S, which forming a siphon serves to effect the separation of the fluids through the water falling to the bottom. The air being retained at the upper part of the receptacle is allowed to escape through a valve or port and pipe, which leads it to the lower part of the receiver G. The water on the other hand descends into a reservoir U, where it finds its level; the excess falls into the air receiver through an orifice situated at its side. The receiver is provided with inclined plates forming a zigzag course or passage, in which the two fluids, air and water, circulate in a contrary direction; the air rising to the upper part of the chamber and kept in reserve to be taken by a pipe which leads it to the expansion cylinder B, whilst the water which has passed through the pipe in U flows downwards towards r, and leaves the receiver finally, or is again returned to the apparatus by an injection-pump. The expansion cylinder B draws the air from the receiver G through the pipe communicating with the two outlet-valves b^1, b^4. The refrigerated air leaves the cylinder through one of the outlet-valves b^2, b^3, and passes into a pipe e, from whence it is led into the medium or place to be cooled or frozen.

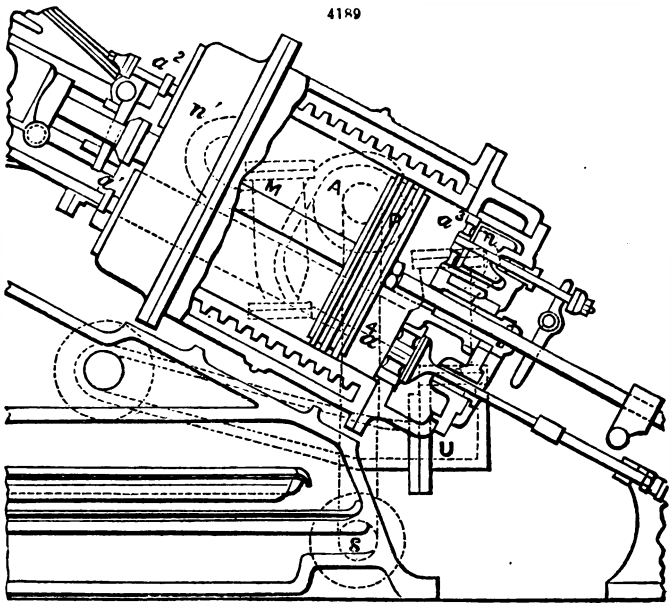

With this arrangement of mechanism the lowering of the temperature may be carried to any desired extent by taking a portion of the cold air produced in order to cool the injection-water, or even by directly compressing this cold air in the compressing cylinder A.

It will be seen that in consequence of the inclination of the two cylinders A, B, and of the junction of the cranks of their respective pistons P and Q upon the same shaft O, the compression and expansion take place simultaneously, the second action aids the first which gives the resisting force and develops the frigorific disposition already attained.

This article is taken, with some addition, from an excellent paper in the Quarterly Journal of Science, on the Artificial Production of Cold, by Dr. B. H. Paul.

IMPACT. Fr., *Choc*; Ger., *Stoss, Urto*; Span., *Empaquetár*.

The word impact implies contact or impression by touch; collision; force communicated. More particularly impact is the single instantaneous blow or stroke of a body in motion against another either in motion or at rest.

IMPETUS. Fr., *Mouvement*; Ger., *Grösse Bewegung*; Ital., *Energia dinamica*; Span., *Impetu*. Impetus is the force with which any body is driven or impelled; or its momentum.

INCLINED PLANE. Fr., *Plan incliné*; Ger., *Schieft Ebene*; Ital., *Piano inclinato*.

See Mechanical Powers.

INCRUSTATION OF BOILERS. Fr., *Incrustation des chaudières à vapeur*; Ger., *Kesselsteinbildurg*; Ital., *Incrostazione delle caldaie*.

Undistilled water generally contains in solution a quantity of sulphate of lime, gypsum, and limestone, chalk, as well as smaller quantities of other substances. Certain waters also contain acid particles which destroy very rapidly metallic vessels used for evaporation

If water is evaporated in a boiler, the solid substances which the water contains in solution are not evaporated with it, and it will be found that the water becomes more and more saturated as the calcareous salts are deposited upon the metallic walls. If these deposits are not removed they will finally become solidified and form upon the walls of the boiler a crust, the thickness as well

as the hardness of which increases as frequently as the water is renewed, and it then becomes necessary to use for its removal scaling hammers and chisels. A steam-boiler covered on its interior with a crust of solid deposits termed scale, has its evaporating power diminished by the reduced inductibility of the plates, and is exposed to the greatest dangers of explosion. In fact, any plate covered on the interior side with a substance which arrests the prompt transmission of heat, may be heated on the exterior side to a red heat, which will necessarily diminish the resistance of the metal by increasing the oxidation, thus reducing rapidly the thickness of the plate.

The disadvantageous consequences will be increased as the interior space of the boiler is diminished, so that in boilers with tubes, the scale may often be accumulated to such an extent that the space between the tubes may be entirely filled. If it now happens that the water finds its way through cracks in the scale between the latter and the decayed and almost red-hot plate, a sudden formation of steam takes place, which detaches the scale over an extended length, exposes a great part of the red-hot plate to a much higher temperature than that of the evaporation, and finally brings the water of the boiler in contact with the superheated plates; the consequence is the sudden production of a great volume of steam, causing almost inevitably an explosion.

Admitting that this extreme case does not very frequently happen, the accumulations of solid deposits and of a great thickness must, nevertheless, eventually bring about the destruction of the boiler, and will in all cases reduce its steam-raising power. It is therefore of the greatest importance to prevent the incrustation of a boiler by arresting solidification of the deposits, if that is possible, or at least by cleaning the boiler before the scale has attained a certain thickness.

The means employed for preventing incrustation are;—

Frequent extraction before solidification, and repeated cleanings;

The addition of substances capable of preventing the adhesion to the plates;

The addition of substances which form a chemical combination with the calcareous salts and modify their properties; and

Feeding with water previously purified.

Mechanical extraction of the deposits and frequent cleaning of a boiler are the means most generally adopted, independently of the nature of the deposits, for preventing incrustation. The operations should be repeated as often as required by the calcareous composition of the water used for feeding the boiler.

The extraction of the deposits, at least of the liquid portion of them, may be effected by means of special tubes designed for the purpose; the solid scale fixed to the plates of the boiler or heating tubes, especially at the places exposed to great heat, can only be removed by striking them with a scaling hammer after the boiler has been emptied. If moderately pure water is used for the boiler, extraction and cleaning are sufficient, but the cleaning should be repeated frequently, so that the deposits are not allowed to get hard; should, however, a few solid deposits remain behind, the hammer has then to be used, and with this view, the diameter of the boiler should be arranged so as to allow admittance of a man or boy.

Care should, however, be taken to empty the boiler only when cold, otherwise the furnace of the boiler, still very hot, calcines the residue after the water has been let off, and it becomes then very difficult to remove.

It is therefore indispensable that no part of a boiler should be inaccessible to necessary tools for separating and removing the deposits; it is of equal importance that the parts in direct contact with the hearth should present no marked projection or deepening in which the calcareous products could accumulate, get hard, and become almost immediately separated from the liquid. Such is especially the case in the joints of the fire-box of locomotives and in other steam generators of a similar construction, where care is taken to fix plugs which may be removed when desired in order to introduce tools through the holes for the raising of the deposits.

Substances hindering the adhesion of Deposits.— If the water used contains a high percentage of calcareous salts, and if frequent cleaning of the boiler does not prevent the formation of scale, it becomes necessary to adopt special means to diminish the inconvenience.

The following remedies have, among others, been used with varying success to prevent incrustation;—

1. Potatoes, $\frac{1}{50}$th of weight of water prevents adherence of scale.
2. 12 parts salt, $2\frac{1}{2}$ caustic soda, $\frac{1}{8}$th extract of oak bark, $\frac{1}{2}$ potash.
3. Pieces of oak-wood suspended in boiler and renewed monthly.
4. 2 oz. muriate of ammonia in boiler twice a week.
5. A coating 3 parts of black-lead, 18 tallow, applied hot to the inside of the boiler every few weeks.
6. $12\frac{1}{2}$ lbs. of molasses fed into an 8-horse boiler at intervals, prevented incrustation for six months.
7. Mahogany or oak saw-dust in small quantities. Use this with caution, as the tannic acid attracts iron.
8. Carbonate of soda.
9. Slippery elm-bark.
10. Chloride of tin.
11. Spent tanners' bark.
12. Frequent blowing off.

Preliminary Purification of the Feed-water.—There is no better means of preventing incrustation than to feed the boiler, where circumstances permit, with water already purified and free from all calcareous salts or corrosive acids.

There are two ways of obtaining this result; preliminary distillation, and chemical operation. If the water destined for the feeding of a boiler had to be always distillated, the expenses for

fuel would be doubled; this plan has therefore to be abandoned, unless the waste heat of the boiler-furnace can be utilized for the purpose.

This has been tried in many cases; the first or preliminary heating of the water being effected in auxiliary recipients or vessels of less importance than the boiler, and which are not exposed directly to the fire upon the grate. The incrustation in these vessels will therefore be less strong than in the boiler.

The importance of the deposits could also be much diminished by the condensation of the steam used in the engine, upon cold surfaces in order to make it again applicable for the feeding of the boiler by adding only the small quantity of water necessary to make up for evaporation which had been condensated in reservoirs plunged into the sea outside the ship; this plan was tried and at first succeeded; it happened, however, that these reservoirs became covered on their outside with a deposit of scale from the salt water, in consequence of which their conductibility was much reduced.

In France M. Lelong-Burnet has introduced a method of purifying feed-water, which consists of a preliminary mixing of the water with chemical agents producing a precipitation of all the substances forming incrustation, so that only pure water reaches the boiler. He employs for that purpose special reservoirs provided with stirring apparatus in order to effect the mashing of the chemicals cast into the water in suitable proportions; the existing salts are thus dissolved and others formed which precipitate to the bottom of the vessels.

It will be seen that the application of the process makes a previous careful analysis of the feed-water indispensable, in order to select, according to its composition, the reacting agents which are best for the complete precipitation of the salts in solution. Burnet has made for that reason a great number of experiments in order to ascertain the most suitable agents for attaining the desired end, and to find the proportions which have to be used according to the nature of the feed-water. He has proposed for the purpose a great number of agents, and especially the solutions of caustic potash and soda, those of alkaline carbonates, baryta, strontianite, and so on. See CORROSION.

INDIA-RUBBER. FR., *Caoutchouc;* GER., *Kautschuk;* ITAL., *Gomma elastica caciù;* SPAN., *Cautchuc.*

India-rubber, known generally as caoutchouc, is composed of carbon and hydrogen, eight equivalents of the former uniting with seven of the latter. This compound is represented by the formula $C_8 H_7$. When perfectly pure, it is solid, white, and transparent. Its specific weight is 925, that of water being 1000. At a temperature varying from 75° Fahr. to 95°, it is supple and elastic; and its surfaces, if free from all foreign matter, or recently cut, adhere and become united when placed in contact under a certain pressure. The physical properties of caoutchouc are greatly modified when its temperature is brought below 32°; it then undergoes a considerable contraction, it becomes less supple, only slightly adhesive, and hardly susceptible of extension. These changes of properties remain even after the temperature has been raised again to 60° or 70°. If a piece of caoutchouc be stretched and cooled down to 32°, it will remain in its extended state, even after its temperature has been raised again to 70°. Its primitive characteristic qualities suddenly return, however, when its temperature is raised above 95°. To make the experiment, take a strip of caoutchouc, stretch it, and place it for a few minutes in water at 32°; on taking it out of the water it will remain in its extended state and possess but very little elasticity at ordinary temperatures. But if it be plunged in water at 105° or above, it will immediately resume its original dimensions and all its elasticity. A strip of caoutchouc suddenly stretched manifests a sensible increase of temperature if placed in immediate contact with the lips. Sudden contraction, on the contrary, causes a diminution of temperature. The reason of this is that in the former case the stretching lessens the volume of the strip, whilst in the latter the volume is increased by the strip returning to its primitive dimensions.

Several liquid carburets of hydrogen, obtained from coal-tar by distillation—particularly benzine—expand and partly dissolve caoutchouc; the same effects are produced by essence of turpentine, deprived of water by quick-lime, and rectified by distillation. Pure essence of lavender and sulphuret of carbon are still more effective. The fat oils may dissolve a small quantity of it, especially when hot. Water and alcohol, which were believed formerly to have no effect upon it, exert a special action and precipitate it in part from its solution in sulphuret of carbon.

Liquid and gaseous chlorine hardly affect caoutchouc, and it is equally insensible to the action of hydrochloric acid, all the weak acids, the greater part of the gases, and the solutions of potash and soda. The concentrated sulphuric and nitric acids change it rapidly, especially when they are mixed, $S O_3, H O + N O_5, H O$.

The effect of steam upon caoutchouc is to soften it and greatly diminish its tenacity. When heated dry from 95° to 250°, it gradually loses its consistency; its particles become more and more susceptible of agglutinating together. At a temperature of about 290° to 330°, it is viscous and adheres to hard and dry substances; a large portion, however, of its consistency and elasticity is regained after cooling. From about 355° to 390° it fuses and appears to undergo an isomeric modification; for while its elementary composition remains unchanged, it has become sticky; if heated still more, up to 430° to 450°, it becomes oily, very brown, and suitable for protecting iron and steel from rust.

Caoutchouc, in contact with a substance in a state of ignition, burns with a luminous red and smoky flame. When subjected to distillation, it gives different carburets of hydrogen, two of which are isomeric with olefiant gas (caoutchene, hevëene); several others have an elementary composition, similar to that of essence of turpentine; they boil at various degrees—57°, 91°, 340°, 419°; most of them dissolve small pieces of dry caoutchouc.

The caoutchouc of commerce is composed of two principal parts, one possessing greater cohesion among its molecules, and being more tenacious and capable of resisting all agents; the other softer, ductile, adhesive, and more soluble. Each of these two parts offers the same elementary

composition represented by the formula C_8H_7; the mass thus constituted contains fatty matters, an essential oil, coloured matters, three nitrous substances, water in variable proportions, which may be as great as 26 per cent., and traces of saline matters.

No one of these substances possesses the extensible and elastic properties in the same degree as the whole together; this seems to be due to the adhesion between the surfaces of the fibrous parts which are lubricated by the fatty matters, and to the isolation of the soft and soluble portion, which would render the whole mass more supple. The structure and composition of caoutchouc enable us to explain several phenomena concerning the penetration of sulphur, the vulcanizing of caoutchouc, and the slow or rapid changes in vulcanized caoutchouc.

In course of time, especially when exposed to the light and to a high temperature, caoutchouc undergoes changes, the effects of which may be seen, though their consequences on the immediate composition of the substance have not yet been determined; in such cases it exhales a sharp odour, it becomes softer and less tough, and sometimes even it may be easily broken.

Caoutchouc and some of its ruder uses were known long ago in South America and in India. In 1736, La Condamine, of the Institute of France, who had been sent to Peru with Bouguer for the purpose of making certain astronomical studies, sent the first specimen of this substance to the Academy of Science of the Institute. Fresnau and Macquer in 1751 and 1768 sent to the Academy some specimens of caoutchouc grown at Cayenne. It was not till the end of the last century that caoutchouc was first imported into England, where it became known under the name of india-rubber, from the almost sole use to which it was for a long time put of rubbing out lead-pencil marks.

In 1790, the raw material cut up into strips began to be used to make elastic balls, ligatures, and certain kinds of springs. Later methods of softening caoutchouc and spreading it over coarse fabrics to render them waterproof were discovered. Fourcroy succeeded in causing it to swell and partially dissolve by means of ether. Grassart in 1791 first made tubes of caoutchouc by winding long strips of that material helically upon slightly conical glass moulds, and joining the whole together. Nadler in 1820 invented a method of cutting caoutchouc into threads suitable for weaving into elastic tissues, and about this time Thomas Hancock introduced the use of the devil or masticator into the manufacture of caoutchouc. This machine, together with his after inventions, were the principal means of extending the india-rubber trade to the dimensions it has now attained.

A few years later, Mackintosh improved the manufacture of single and double waterproof fabrics by interposing a layer of caoutchouc rendered plastic by means of essence of turpentine; he gave a great impulse to the manufacture of overcoats of this material, which overcoats still bear his name. Towards the year 1830, Rattier and Guibal wove fabrics of caoutchouc threads deprived of their elasticity by means of a low temperature; by afterwards heating these fabrics up to about 105°, elasticity was restored to the threads. This method is still employed.

Hayward's patent, taken out on the 24th of February, 1839, by Goodyear, his representative, marks the first use of a small quantity of sulphur; but he did not state either the proportion or the temperature requisite for the transformation. In 1844, Goodyear described the properties—partly discovered in 1839—which sulphur gives to caoutchouc by uniting with it; from this time the operation was known as *vulcanizing*. The same year, Hancock succeeded in vulcanizing caoutchouc by means of a bath of sulphur.

The preparation and vulcanizing of caoutchouc were further improved by Rattier and Guibal. Parkes in 1846 invented the method of vulcanizing by immersing the manufactured articles in sulphuret of carbon containing $\frac{1}{40}$ (or $2\frac{1}{2}$ per cent.) of protochloride of sulphur. Several manufacturers applied this method in various ways, and produced a great number of useful articles. M. Guibal, out of a mixture of caoutchouc and silicate of magnesia, formed cylinders, from which thick washers are cut to be used between the stuffing in stuffing boxes. Recently M. Gérard has constructed an ingenious machine capable of cutting 150 prismatic threads at once instead of eight or ten as formerly.

We will now describe the chief processes employed in manufacturing various articles of caoutchouc. When the methods of extracting the raw material in the countries where it is grown shall have been improved, we shall no doubt be able to obtain directly thick and homogeneous squares and cylinders free from foreign matter. It will then be easy to cut up, by means of machinery, these raw products into thin strips and fine threads, from which a great number of articles may be made much more durable than those prepared by working up the caoutchouc, because in that case the natural texture would not be injuriously changed by exposure to a high temperature.

Threads of pure Caoutchouc.—The irregular bottles of the raw caoutchouc of Para, softened in hot water and then cut in two and flattened between cast-iron plates heated up to 212°, are cut up by a circular knife worked by machinery into discs; these discs are fixed upon an axis, which as it revolves presents the disc to the edge of a circular knife. By this means it is cut up spirally into a long strip of any required thickness, and wound upon a reel. A small jet of water assists the action of the knife. A simple mechanical contrivance controls the action of this circular knife by displacing the centre of rotation and accelerating the motion as the circumference of the disc diminishes. The strip is afterwards subdivided simultaneously into five or six threads by being passed between from six to twelve double circular blades cutting in the manner of shears. This action is likewise assisted by the continuous flow of a small jet of cold water. A boy on the other side gently pulls the threads towards him, and thus assists the passage of the strip.

The thread obtained by this process is, in general, the most elastic and durable that can be obtained. It is first stretched, and its elasticity removed by means of a reduced temperature, in order that it may be more easily woven; contraction and elasticity are afterwards restored to the threads of the finished fabric by heating it in a stove up to 112°. These threads of pure caoutchouc possess the defect of becoming hard when exposed to cold and soft when exposed to heat, and for this reason vulcanized caoutchouc is generally preferred.

Various Operations performed on the Raw Material.—One of the first operations which caoutchouc is made to undergo consists in steeping it twelve to twenty-four hours in warm water; then, after

having cut it up into pieces of about an inch thick with a long sharp knife, these irregular pieces are passed successively between two large rollers of about 15 in. in diameter moving at different rates of speed, one making one revolution and the other two-thirds of a revolution a minute, while a jet of water falls continuously upon the upper roller. In this way the pieces of caoutchouc are crushed, rolled, and at the same time pressed out unequally in the two directions; they issue as thin, granulated strips, full of little holes, thus presenting a large surface to the action of the weak solutions of soda and the hot water by which they are purified and rinced, the air which dries, and the various mechanical and chemical agents which agglomerate, distend, or dissolve them; such, for example, as the deviling machine, hydrocarburets and sulphuret of carbon, the application of which we will describe later. The bottles or hollow cones of raw caoutchouc are left to soak in the warm water for three hours, and then taken out and cut asunder by means of a circular knife which is kept constantly watered. This watering is necessary whenever caoutchouc has to be cut, to counteract the adhesive property of the material and prevent an increase of temperature which would result from the friction, and which would increase the tendency of the caoutchouc to stick to the knife. The bottles when thus cut open let out into the water, into which they are again plunged, the earthy matters they may have contained.

For the raw caoutchouc of Brazil, which is less impure than the other kinds, cleansing by water alone is usually sufficient; it is then passed between the toothed cylinders, which reduce it to thin sheets full of holes.

The *agglomeration* of the caoutchouc, introduced by Hancock, is an operation forming the basis of a great number of the preparations which we shall presently describe, and is effected in the following manner;—

The thin strips, obtained by the rolling already described, having been well washed and dried in the air, are made up into a packet or bundle weighing 14 kilogrammes or about 30 lbs., including the scraps and other work from the preceding operations, and heated in a stove up to about 95°. This bundle is then passed between a massive iron cylinder A, Figs. 4190, 4191, 17 centimètres in diameter, and armed with iron pins or teeth 5 millimètres square, let 4 centimètres into the cylinder and projecting 2 centimètres above its surface, and the iron cylindrical casing, one portion B B of which is fixed and the other portion C is removable. The bundle of 14 kilogrammes is compressed and rolled out between the toothed roller, which makes from 60 to 100 revolutions a minute, and the outer casing B and C which is provided with several projecting diamond-points. The parts of the bundle become heated successively, and, joining together, they at length form a flat lump. This lump, dragged slowly by the powerful friction of the teeth, makes one revolution while the cylinder makes 30 or 40.

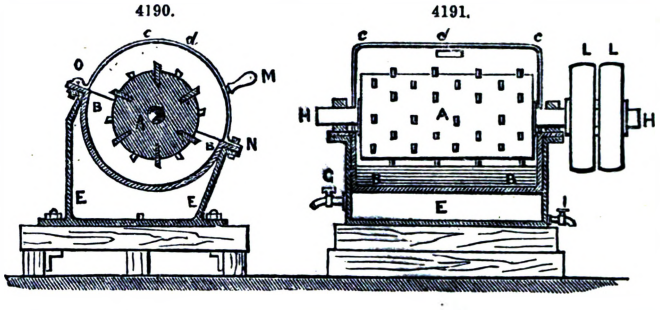

To give an idea of this trituration, we may state that it requires a force of 5 horse-power, and that the bundle of caoutchouc, condensed by the close adhesion of the fragments of which it is composed, possesses at the expiration of ten minutes, the time required for the operation, a diameter of 18 or 20 centimètres and a length of 40 centimètres. Such are its dimensions at the moment when it was taken out of the *devil*, in which its form was quite different, as it was compressed between surfaces only 6 centimètres apart, and limited by the two ends of the cylindrical chamber only 35 centimètres distant from each other.

In winter, during the first quarter of an hour, the agglomeration of the caoutchouc is assisted by heating the cylindrical chamber up to 112° by injecting steam into the double bottom E, Figs. 4190, 4191, by means of a cock G. A rectangular aperture *d*, or several long and narrow apertures, allows the bundle or lump of caoutchouc to be seen and touched. When the operation is completed, the cover is taken off by removing the pin N and raising the handle M. The roll is then taken out, and replaced by another of 14 kilogrammes prepared in the same manner.

As the rolls sometimes acquire a high temperature in consequence of the great friction to which they have been subjected, which temperature would be retained in the middle of the lump for a long time by reason of the low conductivity of the substance, it is necessary, to prevent injury to the material, to cut them asunder through their axis. This is done with a kind of hand-saw without teeth. The heating becomes of more importance in machines of larger dimensions, giving rolls weighing from 28 to 30 kilogrammes; it may be partially avoided and the introduction of the air into the caoutchouc prevented by substituting for the iron pins rounded flutings, projecting 4 centimètres and having a breadth of 4 centimètres at their base.

When it is required to make these rolls up into blocks, they are placed in the stove and heated up to 112° throughout their mass; they are then rolled out into thick sheets between hollow cylinders heated internally up to 105° by steam, and fixed 3 or 4 centimètres apart. Six or eight of these sheets or tablets are then placed one upon another and put under a hydraulic press, where they are left to remain subjected to a great pressure for about a week. The pieces become joined together, and on cooling retain the form they have assumed, of a rectangular prismatic block. This block is kept in a cellar as long as possible, or stored away for several months.

To cut up one of these blocks, it is fixed with india-rubber paste upon the travelling plate or carrier of a machine-knife fixed like a saw for cutting veneer. The carrier is moved forward by

means of a long screw, and the piece of caoutchouc is thus kept up to the edge of a very sharp horizontal knife in rapid reciprocating motion (600 to 800 strokes a minute). To destroy the elasticity and prevent the heating and consequent adhesion of the caoutchouc, a jet of cold water is made to play continuously upon the edge of the knife. When the block has been cut through, it is drawn back, raised by means of screws beneath the support $\frac{1}{3}$, $\frac{1}{2}$, or several millimètres, according to the thickness required, and again pushed forward as before. The sheets thus obtained are used to make tubes, bracelets, garters, balls, and various surgical utensils; all these articles, after they are made, should be sulphuretted to render their elasticity stable.

For cutting the blocks into sheets Charles Moseley invented a machine which, among other improvements, has a drawing or taking-up motion for keeping the sheet of india-rubber at one even tension, and so producing a greater uniformity of thickness and smoothness of surface.

The motion consists of two levers fixed upon the centres of two rollers. One of these rollers revolves in a fixed bearing, and the other roller rests upon the block of india-rubber to be cut into sheets; this roller rises or falls according to the diameter of the block. As the block revolves it comes in contact with the cutting knife, which by an oscillating motion cuts from it a sheet which passes over guide-rollers. As the block revolves it gives a motion to the roller bearing on it, which by means of straps and pulleys gives a rotatory motion to the roller, over which passes the sheet of india-rubber, and as the roller bearing on the block of india-rubber has a surface speed corresponding to that of the block, which decreases as the block decreases in diameter, the sheet of india-rubber is kept at one exact tension. The same effect may also be produced by self-acting cone-pulleys, to give a positive motion to the drawing roller corresponding to the decreasing surface speed of the block. It is necessary in cutting india-rubber to have a stream of water running upon the face of the knife to reduce friction; but to produce a smooth surface upon both sides of the sheet Moseley applies a stream of water to the back of the knife in addition to that at the front.

Fig. 4192 is an end view of Moseley's machine, and Fig. 4193 a plan of the arrangement for watering the back of the cutter.

4192.

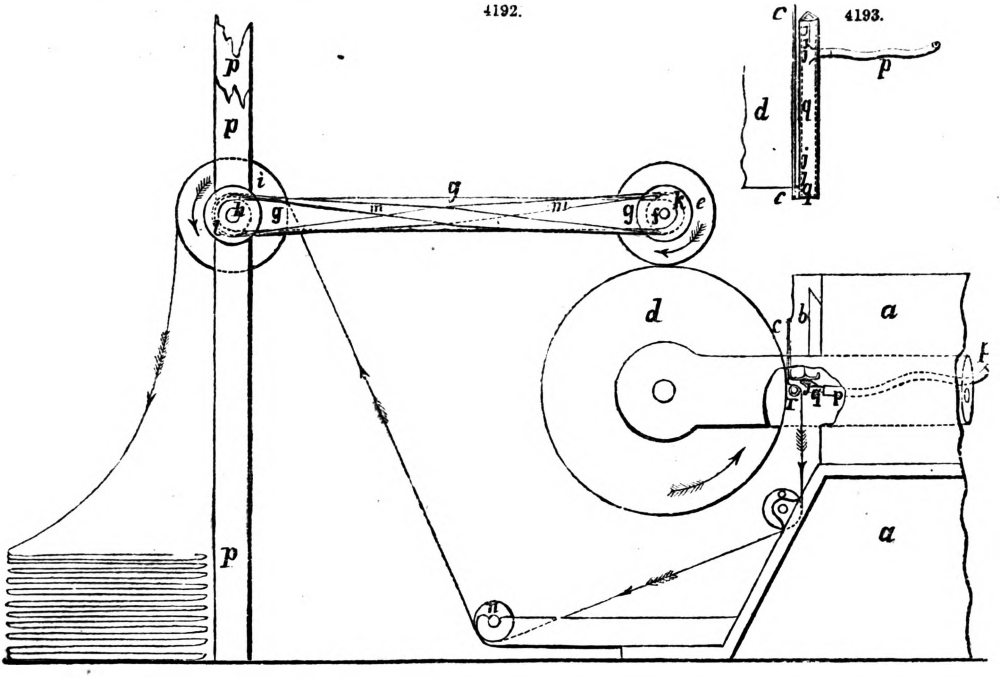

4193.

a is the framing of the machine; *b*, the slide which carries the cutting knife *c*; *d* is the block of india-rubber held in movable bearings to be operated upon. Immediately over the india-rubber block *d*, and in contact with it, is the roller *e* fast on the shaft *f*, which moves in bearings in the two levers *g*, one of which is at each end of the roller *e*. The fulcrum of the levers *g*, and on which they are free to move, is the shaft *h*, which is the axis of the drawing or taking-up roller *i*; this roller *i* is covered with india-rubber, and revolves in fixed bearings in the upright standards *p*. On the shaft *h*, and also on the shaft *f*, which is the axis of the roller *e*, are keyed the two pulleys *k* and *l*, the crossed strap *m* being passed around them. Similar pulleys *k* and *l* and crossed strap *m* are made use of on the opposite ends of the shafts *h* and *f*, and three guide-rollers *n*, *o*, and *r*, are mounted in bearings fixed to the frame sides *a*. The apparatus for supplying water to the back of the cutting knife consists of a tin or light metal trough *q*, V-shaped or otherwise, which extends across the machine the length of the cutting knife. The trough *q* is closed all round, except on the inside edge or lip which is next the cutting knife, where suitable openings *j*, Fig. 4193, are left for the egress of the water, which is supplied to the trough *q* by means of a flexible pipe *p* of india-rubber connected by a branch to the pipe for supplying water to the front of the cutting knife, or from other suitable source at the back of the machine. The trough *q* is fixed under the slide *b* which carries the cutting knife *c* by a thin metal flange fast to and projecting from the trough *q*, and bolted in between the face of the slide *b* and the cutting knife *c*, and it is thus carried

backwards and forwards with them, the flexible pipe *p* being made sufficiently long for that purpose; this motion assists in the distribution of the water along the block of india-rubber *d* from which the sheets are cut.

The mode of operation is as follows;—The attendant having put the machine in motion and turned on the supply of water, the sheet of india-rubber as it is produced by the action of the cutting knife is, as indicated by the arrows, passed over the guide-roller *r*, under the guide-rollers *o* and *n*, and over the drawing or taking-up roller *i*, which revolving and being covered with india-rubber has sufficient bite or hold on the sheet to draw it forward with the required tension. The speed of the roller *i* is required to decrease with the size of the block of india-rubber *d* under operation, for as the sheet is cut from it less length is produced during each revolution of the block *d*, and as it decreases in circumference, its rotatory speed being the same, the roller *e* in contact with it will be driven slower, and will communicate its decreasing velocity by means of the crossed straps *m* to the taking-up roller *i*, so that the sheet of india-rubber will be taken up as it is produced and deposited in folds in front of the machine.

Guibal easily obtains solid cylinders of caoutchouc by placing in a cast-iron mould one of the rolls as soon as it comes from the *devil*. The roll being placed vertically in the mould, an iron piston or ram is put upon it, and then placed under a hydraulic press. When the maximum pressure has caused the roll to assume the cylindrical form, the ram is fixed in this position for twenty-four hours, or even longer, to allow the caoutchouc time to cool and set.

These cylinders are afterwards cut up into sheets by means of the knife described above; but in this case, the section having to be made according to a spiral, the cylinder must be made to revolve, not by the uniform motion of its axis, but according to a uniform velocity of the sheet taken off by the knife. M. Guibal has solved this difficult problem by a very simple and remarkable contrivance. The rotary motion is communicated to the cylinder of caoutchouc by means of an endless strip of linen cloth, which, guided by rollers and always possessing the same velocity, since its length does not vary, allows each oscillation of the knife to advance by an equal quantity; it follows from this that the streaks or cuts slightly marked by each oscillation are equidistant, like those which are obtained by moving forward with a uniform motion the rectangular blocks placed horizontally upon the machine table.

Tubes and other hollow articles of all forms may be easily made of these flat pieces of caoutchouc by cutting the edges short off and bringing the sections in contact under pressure and welding them with a hammer upon an anvil. The operation must be performed in a warm place (about 75°), and the caoutchouc must be of the same temperature. If it has been previously cooled down to 32°, it must be reheated up to 105° to restore its elasticity and adhesive quality. The articles may be vulcanized cold after they are made, by a process which we shall presently describe.

Recently a new kind of rolling machine has been substituted for the *devil*, already shown in Figs. 4190, 4191. It consists of two hollow cast-iron cylinders, 33 centimètres in diameter and 75 in length, heated internally by steam; one of the cylinders is grooved longitudinally, and revolves with a greater velocity than the other in the ratio of 3 to 2, the motion being transmitted from one spindle to the other by means of toothed wheels of different diameters. The axes of both cylinders are in the same vertical plane, about 20 kilogrammes of caoutchouc in flat pieces is introduced between them, and as the machine is not covered in, the work can be easily watched. Moreover, as the roll of caoutchouc produced is not very thick, there is nothing to fear from an accumulation of heat in the middle of the mass.

Threads of caoutchouc are obtained by cutting up a piece of agglomerated caoutchouc 2 or 3 centimètres thick with a punch, or by means of the circular knife, into discs of 15 or 20 centimètres in diameter; these discs are then cut up spirally into strips, which are then subdivided into threads in the way described under the head of natural caoutchouc. The discs to be cut up into strips may be prepared in two other ways, by cutting them from the cylindrical blocks obtained by moulding the lumps taken from the deviling machine, or from cylinders prepared by rolling up a sheet of caoutchouc that has been worked and rolled between hot cylinders.

A great improvement has lately been made in the fabrication of *square* shreds in the form of a machine invented by M. Gérard. To produce threads by this machine, a thin piece of Para caoutchouc worked up with six hundredths of sulphur, and rolled out between hot rollers, is sprinkled, as it comes from the cylinders, with talc on both its surfaces. This sheet is then wound with a piece of linen cloth interposed upon a hollow mandrel, or kind of plate-iron bobbin. Its breadth is about 66 centimètres, its length 60 mètres, and its thickness varies from half a millimètre to 1, 2, or 3 millimètres, corresponding to threads whose section is a square having sides of one of these four dimensions. All the sheets thus rolled up are placed, by means of a rod passing through the hollow axis of the bobbins, into a stout vertical plate-iron cylinder, where they are exposed for two hours to a temperature of 285°, produced by steam injected under a pressure of four atmospheres into the closed cylinder. The long sheet of caoutchouc is then ready to be cut up in three cuttings throughout its whole length, a little margin being left at the edges to allow for any irregularities in the width.

The principal part of the ingenious machine producing this result, is composed of from 150 to 250 circular blades 7 centimètres in diameter and one-tenth of a millimètre thick, punched out of thin watch-spring steel. These blades or knives are kept at an equal distance from each other by brass washers from one-half a millimètre to 1, 2, or 3 millimètres thick, and 6 centimètres in diameter, all firmly held together by a nut on the end of a stout spindle. Beneath is a solid half-hardened india-rubber cylinder fixed upon a spindle parallel to the former, and in the same vertical plane. This cylinder, into which the knives slightly enter, supports the threads as they pass and are cut. The sheet of caoutchouc, moistened with water, is then placed between the knives, which are raised for a moment in order to mark a marginal border in front, and the rapid motion of 1500 revolutions a minute communicated to the spindle, whilst the solid india-rubber cylinder makes only 8 or 10. A continuous flow of small jets of water prevents adhesion and

friction, and a kind of brass comb separates the threads. So fine are the sections, that the sheet of caoutchouc issues from between the knives without any apparent division having been made; but the lightest touch shows the 150 to 250 threads. These threads are tied up into skeins and cleansed, first in a solution of potash heated up to 212°, which softens the surface, and then in pure water. When they have been dried in the air, they are passed over a table between vertical round brass teeth, to destroy any slight adhesion; they are then ready for weaving. This machine makes in a given time as many threads as ten or fifteen common machines.

Solid balls of caoutchouc are made by placing the end of a roll against a revolving cylindrical rasp, formed of a sheet of iron punched full of small holes and having the burr on the outside, like a sugar-rasp. The great friction caused by the rapid motion of the rasp, 500 to 600 revolutions a minute, soon divides the mass of caoutchouc up into small fragments, which, having become heated by the friction, have acquired so adhesive a property that they form only a soft and pulpy mass. While in this state, it is made into an irregular ball by hand and placed in a cast-iron mould having two turned and polished hemispherical cavities; these two halves may be powerfully pressed together by means of a hoop and screw. A small quantity of the soft material is pressed out of the joint and forms a ridge; this is removed by changing the position of the ball in the mould. The pressure is then increased, and the ball left to cool; in twelve hours the ball will become very hard, and may be taken out of the mould. To restore its elasticity, it is kept for half an hour in a stove or in water heated to 122°, and then left to cool in an ordinary temperature.

Thin filaments of caoutchouc are prepared by a kind of rolling when hot. A roll is taken as it comes from the deviling machine and flattened by pressure or cut in two longitudinally by a plane passing through its axis. The part thus obtained is heated in a stove up to 100° or 120°, and then passed several times between the cylinders of a rolling machine. These cylinders, which are hollow, are very gradually brought together during the process of rolling, and their temperature is raised to about 175° by putting red-hot bars of iron inside, or better, by an injection of steam. When the thickness of the caoutchouc is reduced to 2 or 3 centimètres, it may be folded double and passed through again several times in this way to render the substance homogeneous. The binding screws of each of the bearing blocks of the upper cylinder are then tightened and the sheet of soft caoutchouc again passed through; on leaving the rollers this time it is very thin. It may be obtained of any length as, to continue it, it is only necessary to supply the machine with material.

This thin filament is soft and very sticky; in this state it is put between two tissues and the three thicknesses passed between the rollers of a second machine. In this way stout waterproof fabrics are made, rather heavy, perhaps, but free from the strong smell of common *dissolvents*, as these are altogether excluded from the preparation. When it is required to leave one face of the caoutchouc bare, one tissue only is used. The edges of this double tissue, folded in two and cut up into circular elliptical and rectangular forms, may be made to adhere at pleasure. The edges of the caoutchouc, put in contact and pressed hot, join and form a closed vase. A space is left in one of the corners for an ajutage, which is stuck in with caoutchouc paste. This ajutage, which is provided with a small screw stopper, is used to introduce into the vase or bag the solution for vulcanizing the caoutchouc and afterwards the air with which this kind of bag is distended to render it *elastic*.

When it is required to obtain the filament of caoutchouc alone, it is made to pass, as it comes from the hot rollers, into a bath of cold water very slightly alcalized, whence it is wound upon a reel; powdered talc is sprinkled on both its surfaces to prevent their sticking. If the rolling be effected rather slowly, between cylinders heated internally by steam, the sheets of caoutchouc retain the thinness so acquired. These sheets may be coloured by means of opaque powders. In this way zinc-white gives a whitish tint, and vermilion a beautiful red; a yellow or orange-red may be obtained with the ochres, blue with ultramarine, and black with bone, ivory, or lamp black. It is in accordance with these principles that M. Gérard produces from a single piece a kind of rug with designs in relief and a deep embossing. A stout strip of caoutchouc worked up with sulphur and coloured powders, and forcibly compressed between two hollow cast-iron plates heated by steam, first up to 240° for one hour, then for two hours up to 285° in order to effect the vulcanization. These remarkable carpets may be two yards long by one broad, and as each of the patterns of two yards may be multiplied indefinitely, whole pieces of a hundred yards length may be manufactured for use in long galleries.

Pastes and Solutions of Caoutchouc.—The thin sheets of caoutchouc and those obtained by crushing and drying, as described above, are very suitable for making pastes and solutions. They are first cut up into small pieces, and then placed in contact with each other in a closed vessel, with one-and-a-half times, twice, or three times their weight of essence of turpentine rectified, or better still, benzine. After twenty-four or forty-eight hours, the caoutchouc is distended and softened; in this state it is passed through a fine cylinder crushing machine, Fig. 4194. Each cylinder is 12 centimètres in diameter, and 40 in length, and it revolves in a semicircular trough *b*, forming the upper portion of a box *bc*, heated more or less by steam. The compound being put into the shoot *d*, runs down between the first cylinder and its trough. When the substance arrives on the other side of the cylinder, it meets the edge of a knife or scraper *g*, tangent to the surface of the cylinder; it then falls beneath the next, and so on throughout the whole number of cylinders. At *e*, it falls upon an inclined plane, and runs thence into a vessel *f*.

4194.

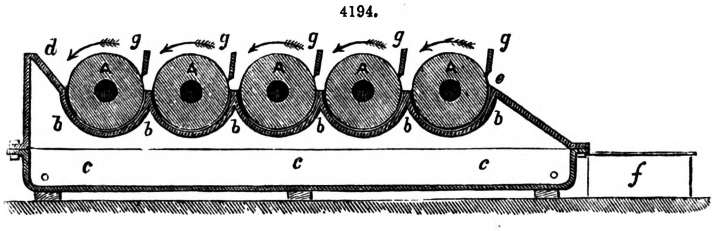

In this crushing machine, the five cylinders receive, from an equal number of endless screws fixed upon one spindle, the motion of an equal velocity communicated by these screws to each toothed wheel fixed upon the axis of each cylinder.

The solution so prepared is used for various purposes; to stick together the parts of india-rubber articles, to join rectangular pieces of agglomerated caoutchouc end to end, and to overlay certain fabrics to render them waterproof. It is sometimes laid on the back of wainscoting in contact with damp walls, and it is frequently employed to give a strong and supple joint to the dry surfaces of many parts of domestic furniture and musical instruments. This caoutchouc paste also forms, by a very simple process, a supple binding for certain kinds of books, such as ledgers, &c. The books to be bound are put into a press, cut, and all the leaves at the back, which have been cut straight, are laid over with three or four layers of solution successively dried; upon the last layer is placed a piece of fine linen cloth by which the leaves are held to the covers.

Oils for lubricating Machinery.—Colza oil, containing 1½ or 2 per cent. of caoutchouc, cut into very thin strips, and dissolved by a temperature of 250° to 265° kept up for five or six hours, becomes slightly brown and viscous; in this state it is very suitable for lubricating the rubbing parts of machinery.

Caoutchouc Cement.—This mastic is made by melting carefully, at a temperature of about 430°, caoutchouc cut very fine. As soon as it becomes fluid, slaked lime in the form of dust or powder is mixed with it; two parts of caoutchouc and one of lime give a soft cement; by doubling the proportion of lime, we obtain a firm but supple cement. These cements remain a long time ductile and tenacious; bottles may be hermetically closed by putting some of this material round the worn edges of a stopper. If we require the outside of the cement to dry, we must employ, for two parts of caoutchouc, one of lime, and one of red-lead.

Tubing.—The paste used in making tubes may be composed of 59 parts of caoutchouc, 35 of oxide of zinc, 5 of sulphur, and 1 of pulverulent lime. The strips of caoutchouc are first sprinkled with powdered talc to prevent their sticking; to render them more homogeneous, they are usually placed for an hour upon a hollow table heated by steam up to 250°. A strip is folded double, to a breadth proportionate to the diameter of the tube, and the edges cut with shears. The incision through the two thicknesses is made at an angle of 45° with the surface of one side, and consequently of 135° with the other, Fig. 4195. When the cylindrical form is given to the piece by means of an iron rod, the two surfaces of the section fit each other, as shown in Fig. 4196, and a pressure with a bar or a few blows with a flat rule is all that is required to make the edges adhere firmly.

4195.

4196.

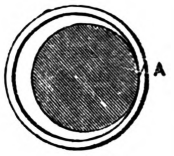

The tubes are in this way made upon smooth iron rods from 5 to 15 millimètres in diameter and from 10 to 13 mètres in length, and sprinkled with talc. When the joint is effected, the tubes are wrapped in a cloth and vulcanized by heating them for an hour and a half or two hours to a temperature of 270° to 285°, four hundredths of sulphur having been introduced into the paste at temperatures varying from 105° to 212°. For this purpose the tubes with their rods are placed in a vertical cylinder from 12 to 13½ mètres in height and hermetically closed. Steam is then introduced, and the temperature kept at 273° by means of a gauge indicating a pressure of three atmospheres. When the tubes have cooled, the rods are withdrawn. Should the tube stick to the rod, the adhesion is destroyed by injecting water between them with a small hand-pump.

Large Sheets of Caoutchouc, Waterproof Fabrics, &c.—Processes producing large sheets of caoutchouc are employed for obtaining pure or coloured layers of that material upon silk or linen fabrics, or smooth sheets of large size, either of pure caoutchouc or mixed with colouring oxides. The process is effected in the following manner;—The caoutchouc is first dipped into hot water, cut up into shreds, crushed between rollers, washed and purified in the way we have already described. The shrivelled strips so obtained are dried for twenty-four hours in a stove, and then immersed in three times their weight of rectified essence of turpentine; in this state they are left from twenty-four to forty-eight hours in covered wooden boxes lined with plate iron, and containing 500 litres. The shreds of caoutchouc, distended by the essence, are then distributed into eight cylindrical capsules, the bottoms of which are perforated like a skimmer; the thickness of the substance in each capsule is about 6 centimètres. The eight capsules are placed in a cylindrical column closed by a cover and made to fit tight over a wide-mouthed vessel containing essence of turpentine previously rectified. The essence is then made to boil, and the rising vapour passes through the capsules, heating to nearly 322° the caoutchouc contained in them, which becomes thus more regularly and intimately penetrated with essence. The vapour of the essence escapes at the top of the column through a side pipe which takes it into a common serpentine pipe where it is condensed, giving again distilled essence fit for subsequent operations. After two hours, the capsules are taken out of the column, and their half pasty contents poured into the barrel of a vermicelli press, provided with several graduated wire-gauze screens, supported on plates pierced with holes. The pressure exerted upon the piston by means of an iron screw, forces the caoutchouc pulp through the three or four screens. By this means it is better separated, as solid foreign matters, as well as the hard portions, are left in the pump-barrel.

The soft substance is next rolled and kneaded beneath cylinders similar to those already described, either alone or mixed with a few hundredth parts of ultramarine blue, orpiment, zinc-white, vermilion, or half a hundredth part of lamp-black (calcined), to make a blue, yellow, opaque white, brown, red, or black paste. Three or four hundredth parts of sulphur may be added if it be wished to vulcanize the material afterwards by merely heating it up to 275° to 285°. If the paste while being kneaded is not sufficiently soft, from half to one part of essence of turpentine may be added, which makes altogether three and a half or four parts for one part of caoutchouc; the paste is then ready to be laid on the fabrics. This is effected in the following manner.

In a part of the factory specially devoted to that purpose, well ventilated, and free from dust, a double frame supports, at a distance of 28 to 29 metres apart, two cylinders 60 centimètres in diameter, and $1^{m}\cdot50$ in length, revolving upon their axes, which are placed horizontal and parallel to each other. Over these two cylinders is passed a stout endless band, which may be tightened at will by means of binding screws upon the bearing blocks of the axis of one of the cylinders. The fabric $1^{m}\cdot30$ to $1^{m}\cdot33$ broad, which it is required to overlay with caoutchouc, is laid upon this band, and the two ends are sewn together, so that it too forms a continuous circuit and follows with the rotation of the cylinders all the motions communicated to the band. A transverse bar of wood, or better of iron, forming a kind of knife with a rounded edge, may be brought into contact with the fabric by two adjustment-screws; this serves to limit the thickness of the layer. A second transverse bar, parallel to the former, with rounded angles and covered with swan-skin, is placed under the endless band to keep the fabric perfectly horizontal and to regulate the pressure of the upper bar.

All being thus arranged, the paste is poured upon the fabric in front of the bar; and the two cylinders being set in motion, the band and the fabric upon it move along together, dragging the paste beneath the bar with a speed of 10 mètres a minute, so that in seven minutes the whole 69 mètres are covered. It was necessary formerly to wait at least two hours for the essence to evaporate before applying a second layer; in this way from twenty-eight to thirty hours were requisite to apply fourteen layers. But Guibal and Cuminge have reduced the whole duration of this operation to two hours by means of a new arrangement.

This arrangement consists in placing under the band at a distance of 1 mètre from the transverse bar A, Figs. 4197 to 4201, the two latter of which show the details of the bar or knife, a closed vessel, being a kind of box of plate iron B C D slightly bulging, as shown in Figs. 4197 to 4199, upon which the band rests throughout its whole breadth and for a length of 5 mètres. Into this vessel steam passes freely through a pipe E from a boiler in which the temperature is kept at 194°. The condensed steam flows out through the tubes *b' c'* towards the water return. The heat thus transmitted to the thin layer of caoutchouc paste hastens the evaporation of the essence of turpentine employed. Besides this, a refrigerator F, formed of two slabs placed together like a roof, and having a slope of 45°, is erected over the fabric for a length corresponding to that of the vessel beneath. As the vapour exhaled from the paste meets the slabs, it is cooled by the water which falls upon them continuously from above from a pipe G parallel to their ridge, and pierced with holes on each side. The equal dissemination of the water over the whole surface is secured by fixing upon each slab a piece of coarse linen or canvas. The vapour of essence of turpentine or of *benzine* is condensed against the lower faces of the slabs, and, flowing down, collects in the channels I, which take it to a common receptacle J on each side.

In seven minutes each layer is spread and dried upon the fabric, which is wound alternately upon the two reels K L, so that the fourteen layers are laid on in two hours. As soon as the last layer is sufficiently dry, the fabric is wound off upon a portable reel. If the caoutchouc contain 3 or 4 per cent. of sulphur worked into it by kneading, it may be vulcanized by simply exposing the fabric to a temperature of 270° to 275° in a cylinder with a double envelope heated by steam up to 291° under a pressure of four atmospheres. The following composition is used by Guibal as a cheap and durable coating, free from all unpleasant smell;—

Purified caoutchouc	33
Ground litharge	50
Carbonate of lime	10
Lamp-black	2
Sulphur	5
	100
Benzine	100

The above method of vulcanizing is, however, employed only for linen fabrics; for silk and woollen goods would become crisp at so high a temperature. These are hung up in a cylindrical stove 3 mètres in diameter and 5 mètres high, which is heated for twelve hours by steam circulating under a pressure of four atmospheres through tubes at the bottom. During one and a half of the twelve hours the temperature is at 268° to 275°. These fabrics, which are intended for cloaks and hunting and shooting overcoats, are coated with a composition consisting of 30 parts of caoutchouc, 50 of porphyrized litharge, 10 of chalk, 2 of lamp-black, and from 4 to 5 of sulphur.

The same arrangements serve to coat a fabric upon both sides, by simply turning it over upon the endless band; in such a case more than five or six coatings are seldom laid upon each side. In the same way, four or five layers may be put between two pieces of cloth by laying two or three coatings upon each, and passing the two, placed face to face, between two rollers, which would make them adhere firmly.

The same machine is used to make large thin sheets of caoutchouc alone, either pure or mixed with pulverulent matters, such as sulphur and the colouring substances, zinc-white, ultramarine, ochre, lamp-black, and so on. In this case, a dressing of paste and two or three layers of a mixture of equal parts of molasses and gelatine must be first spread upon the endless band, which is stretched between rollers 14 mètres apart, occupying the place of the reels K L. This coating, which is sufficiently dry not to stick to the substances placed upon it, keeps supple for a long time by reason of the hygroscopic property of molasses. Upon this consistent coating as many as forty layers of the caoutchouc paste is laid to obtain a thickness of 1 millimètre; each layer, spread in ten minutes, requires one hour to dry, so that forty hours are required to spread and dry the forty layers. The sheet of caoutchouc is easily detached from the band, as the gelatinous coating prevents adhesion; it is afterwards sprinkled with very fine sifted talc and wound on a reel.

4197.

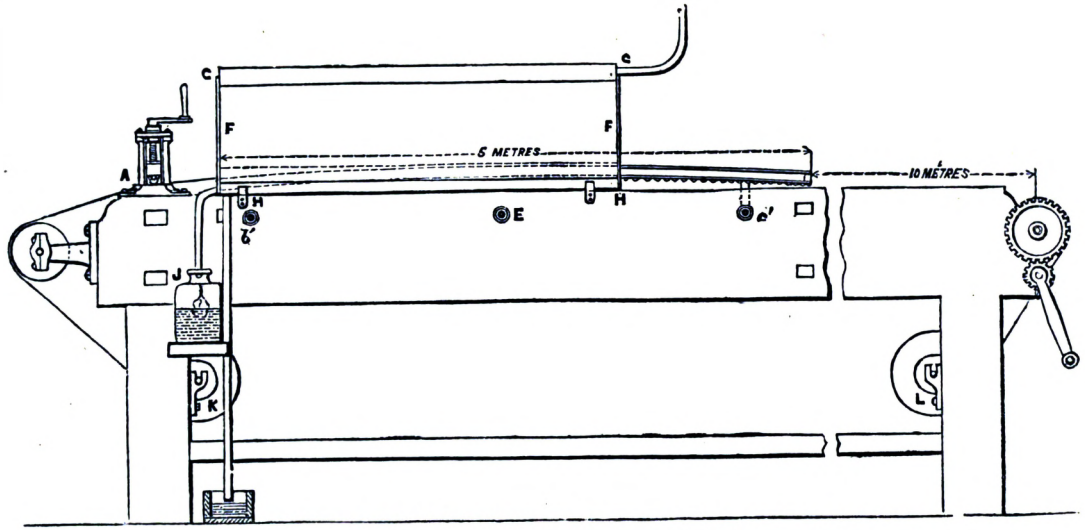

4199

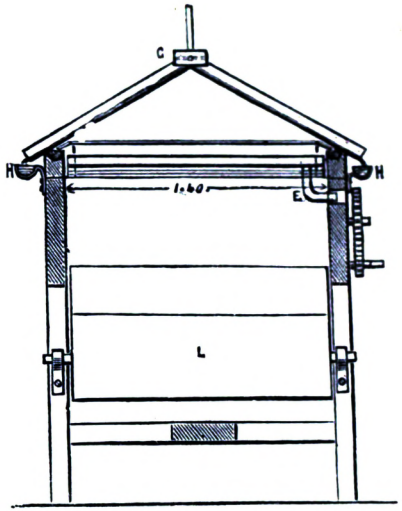

4198.

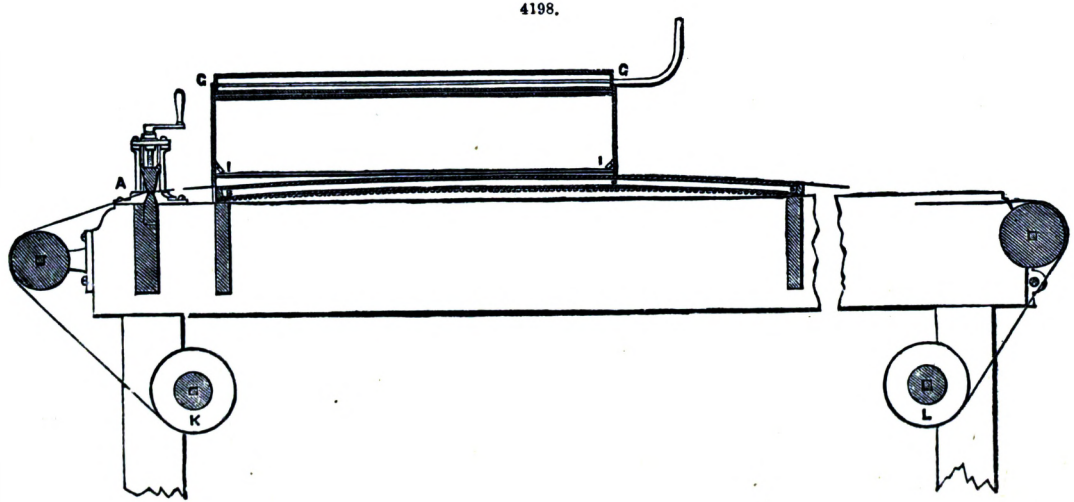

4200.

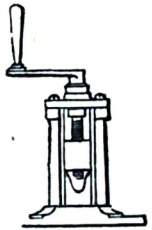

4201.

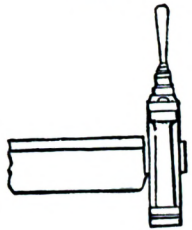

Articles of all shapes may be made out of this sheet, and afterwards vulcanized by simply heating them up to 275°, if sulphur has been previously mixed with the paste. The excess of sulphur may be removed from the articles after they are vulcanized, by immersing them for an hour in a boiling solution of soda or caustic potash; and the surface may be made softer by passing them through a bath of hydrochlorite of potash (Javelle liquor) heated up to 140°.

The method of dissolving and distending caoutchouc by a mixture of sulphuret of carbon and caoutchouc cold in a closed vessel, and then kneading in a press which forces the paste through fine wire gauze, is employed to prepare a coating to be put between two fabrics unwound from two cylinders, and uniting beneath the rollers of a rolling machine. The paste possessing sufficient fluidity holds the two together, and renders them waterproof. The sulphuret of carbon is more completely and more quickly volatilized than essence of turpentine, and leaves less smell. To moderate the evaporation and increase the adhesion, benzine may be substituted for a portion of the sulphuret of carbon.

The rolling machine and cylinders should be enclosed and well ventilated to protect the workmen from the noxious influence of the sulphuret of carbon.

Uses of the Sheets and Strips of Caoutchouc cut by the Machine-knife.—A great variety of articles may be made of these pieces before they are vulcanized, whether they contain 5 or 6 per cent. of sublimed sulphur, the action of which will show itself later by being raised to a temperature of 275°, or whether vulcanization is to be effected cold by chloride of sulphur dissolved in sulphuret of carbon. In any case, these pieces of caoutchouc, rendered supple by a temperature of 76° to 86°, are formed into all sorts of shapes before they are vulcanized; and if the articles produced are small figures or balls from 5 to 8 millimètres thick, their regularity is perfected by means of a mould into which they are placed hot, a temperature of 212° to 248° being sufficient to ensure correctness of form, and from 271° to 275° to fix the form acquired by vulcanizing the material. We shall give a sufficient idea of the processes employed in making a vast number of articles of this nature by describing the manufacture of hollow balls.

Small hollow balls of 8 to 12 centimètres in diameter are made of strips of caoutchouc mixed with sulphur, reduced to a thickness of 5 or 6 millimètres, by rolling, or by being cut with the oscillating knife. In all cases, four segments of a sphere are cut out of these strips according to models, and the edges joined by pressing them between the thumb and finger or with a caoutchouc paste, sulphur, sulphuret of carbon, and benzine, care being taken to enclose as much air as possible. They are then placed between the two hollow half-spheres or shells of a grooved mould a little smaller than the ball formed of the segments; the two shells are held together by thumb-screws. When all the moulds have been filled and screwed up, they are placed in the steam vulcanizing cylinder; here each ball swells by reason of the air inside dilating under the influence of the temperature, presses against the smooth or grooved face of the mould, and soon after the temperature has reached 266° becomes set by being vulcanized; the pressure of the confined air is sufficient to keep the ball distended. These balls are used as indoor toys, where harder ones would be dangerous.

Larger balls, such as those used for foot-ball and similar games, are made in the same way; but the necessity for greater consistency and elasticity requires the insufflation of compressed air. This was formerly effected by placing a small round piece of caoutchouc in the form of a washer on the inside to double the thickness at that part, and, after the ball was moulded and vulcanized, inserting, through a hole bored in this double thickness, the end of the blow-pipe of a compression-pump. When the ball was sufficiently distended, the pipe was withdrawn and a small conical iron plug inserted in its place. This manner of closing the hole was, however, defective, for a shock such as that caused by a blow or a bound soon blew out the plug, and the ball collapsed. This accident is now avoided by means of a very simple contrivance. Instead of putting a little disc of caoutchouc mixed with sulphur on the inside before the ball is closed up, as described above, a thicker disc, free from sulphur, is so applied. When these balls have been moulded and vulcanized in the steam-cylinder by a temperature of 275° in the manner already described, they are too feebly distended to enable the pressure inside to withstand the external pressure. They may, however, be easily distended to a greater degree, and kept in that state. This is done by simply inserting the point of a pipe communicating with a blowing machine. When the ball is sufficiently distended, the pipe must be withdrawn without allowing any of the compressed air to escape. This difficulty is surmounted by squeezing between the thumb and finger the thick disc of caoutchouc on the inside, which is still in its normal state, since it contains no sulphur. As it still retains its adhesive property, therefore, the pressure of the fingers is sufficient to make the sides of the aperture adhere, and so close it hermetically.

India-rubber Carpets.—We have already referred to the carpets, or mats, formed of a single piece of caoutchouc, manufactured by M. Gérard. In fabricating these articles he places a thick sheet of rolled caoutchouc between two cast-iron chests 50 centimètres in depth, strengthened by strong stays, and closed by a thick bolted lid of cast iron. The lower chest bears the rectangular moulds of cast iron, having hollows and projections sculptured and engraved upon them, in order to produce, by means of a heavy pressure transmitted by two iron screws, deep impressions; regular designs, bordered by a truly artistic framing of bas-reliefs, or medallions, are thus obtained between the faces of this kind of large embossing machine. At the moment when the pressure produces its effect, steam, under a pressure of four atmospheres, is injected into each of the two chests, so as to raise the temperature throughout the whole mass during one hour and a half to 284°. When sufficiently cooled, the screws are loosened and the caoutchouc removed.

It is possible in practice to obtain carpets two, three, or even twenty-five times this length, by continuing, one after the other, two, three, or twenty-five similar impressions upon the same sheet of caoutchouc. Care must be taken, in joining the moulds, to leave the contiguous portions exposed to the air, to avoid vulcanizing them a second time, which would render such parts of the carpet too hard.

The paste should be formed with 50 parts of caoutchouc, 15 of ravelled linen, 25 of oxide of zinc, 4 of sulphur, 5 of lime, and 6 of chalk. The 5 parts of lime serve to absorb the hydrosulphuric acid which is continually generated during the sulphuration, and to prevent this gas from causing flaws. The sticking of the moulds may be prevented by rubbing their surfaces before each pressure with a greasy cloth, or moistening them with soapy water.

The Manufacture of Machine Belts.—The following is the method employed by Aubert and Gérard in the manufacture of strong machine belts. The raw caoutchouc successively dipped in warm water, passed through the crushing machine, washed, dried, and agglomerated, then well kneaded with ·05 of its weight of finely-powdered sulphur between cylinders heated internally by steam to 120° or 140°, gives a very homogeneous paste, which is spread over a stout linen cloth and made to penetrate all its interstices by means of a machine called a *Spreader*, Fig. 4202. This machine is composed of three hollow cast-iron cylinders, A, B, C, of equal diameter, heated internally by steam introduced through the axis of a hollow spindle turning in a stuffing box; these cylinders are each furnished with a cog-wheel. Motion is imparted to the cylinder B, and transmitted by its toothed wheel D to each of the other wheels E, E′; the diameter of each of which is double that of the wheel D. It follows from this arrangement that the cylinder B turning twice as fast as each of the other two, the stout cloth, 1 mètre in breadth and 10 to 50 mètres in length, which passes between these cylinders receives the caoutchouc paste with so great a friction that it is penetrated by it, and the sheets thus prepared being placed one upon another, in number from three to ten, and passed between the heated cylinders of a rolling press, are formed into a solid mass. They are then cut up by a machine-knife according to the size of the wheels which they are intended to drive. To give them greater strength, and to render their edges smooth, they may be enveloped in a cloth prepared in the same manner and the joint covered with a narrow strip, which will render the whole envelope solid with the subjacent tissues.

4202.

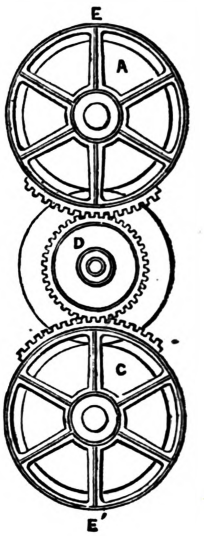

Vulcanization is then effected by placing the belts in wrought-iron moulds forming a rectangular groove, which has been previously soaped, and which then receives an equally smooth plate of iron extending 10 or 12 millimètres beyond it. All the moulds thus filled are placed upon the lower chest of the vulcanizing press previously described. When the whole of the surface of this is covered with moulds the upper chest is lowered, by means of an endless screw working into the two cog-wheels which turn the screws of this press, and during the time that the pressure is exerted the temperature in the moulds is raised, by steam under a pressure of four to five atmospheres, to 284°. Under these conditions an hour suffices to vulcanize the belts. Then the upper chest is raised, the belts withdrawn from the moulds, and replaced by a second length in the same moulds. This second length is vulcanized in the same manner as the first, and the process is repeated until the whole length of belt has been vulcanized.

As contact with the iron distributes the heat rapidly, the time necessary for vulcanizing is, comparatively with vulcanizing by confined steam, diminished by one-half, from one hour to one hour and a half, instead of two hours to two hours and a half. The extremities of the moulds are slightly hollowed out, in order that in changing the place of the belt it may not be found twice vulcanized near the line of demarcation.

Hard India-rubber.—About the year 1848 a branch of industry was founded in America by Goodyear, in which advantage was taken of the properties of caoutchouc hardened by its combination with sulphur, in proportions much larger than those which constitute the compound known under the name of *Vulcanized India-rubber*.

The following is the method of preparing this substance;—

The raw materials are obtained from the products of a cheap and inferior quality, imported from Java and India in blocks containing foreign matters requiring a special purification. The lumps, more or less *voluminous*, of this raw caoutchouc, are put into tanks containing water which is kept at a temperature of from 110° to 120° during thirty-six to forty-eight hours. When these are sufficiently softened, they are cut up by means of a large and sharp thin-bladed knife into pieces of about 1 kilogramme in weight and between 6 and 12 centimètres thick. These pieces are crushed and kneaded between two cylinders slightly wetted, turning in contrary directions, the one making one revolution, the other two-thirds of a revolution a minute. The strips thus obtained, rough and full of holes, are next torn into small shreds by means of a machine similar to that employed for preparing the pulp in the manufacture of paper. When the continuous flow of water in this machine has entirely eliminated the earthy and other foreign matters, the caoutchouc is lifted out in a kind of floating pulp, and dried upon cloths fixed in frames; care must be taken not to raise the temperature of the current of air to a degree which would render the caoutchouc adhesive and cause it to retain a portion of the water.

The dried substance is then kneaded for about an hour by being made to pass several times between two cylinders, heated by an injection of steam to between 120° and 140°.

The pasty consistency of this mass admits of the easy incorporation with each 100 kilogrammes of caoutchouc of 50 of stone sulphur, reduced to powder and passed through a brass sieve No. 90 to 100 or 110 (that is to say, showing, when viewed under a lens, 90 to 110 threads upon each side of a square of 27 millimètres).

The sulphur being intimately blended and uniformly spread throughout the mass, the cylinders are brought closer together by means of regulating screws acting upon the bearing blocks, so as to reduce the paste to a sheet of the required thickness (of 2 to 7 millimètres, but more usually of 3 to

4 millimètres) for the manufacture of combs and common articles; the sheet is cut up according as it is rolled, into tablets of 40 centimètres in breadth and 60 centimètres in length.

These soft tablets are received upon frames, upon which is stretched moistened canvas, and plunged into warm water at about 80°, in order to take off the excess of heat and render them more firm, and to effect the contraction which otherwise would be produced at the moment of vulcanizing, and which would detach them from the sheets of tin or of glass. They are then dried and placed upon sheets of tin or glass, previously covered with a thin layer of lard: then, to ensure their contact, a very smooth iron roller is passed over it, and, to prevent the caoutchouc from sticking to the roller, the latter is powdered with silicate of magnesia (talc).

After remaining twenty-four hours in a horizontal position, which increases the consistency of the tablets, the plates thus charged are placed upon iron frames mounted on a bed-plate which keeps them in a position inclined at about 45°, in order, on the one hand, that the tablets may not run as they become soft during the sulphuration, and, on the other hand, that the drops of condensed water may run off without staying on the paste.

The bed-plates, mounted upon wheels, are run upon rails into a stout plate-iron cylinder, 1 mètre in diameter and 6 mètres in length.

This is closed by a kind of door of cast iron having a circular flange, which fits into a groove round the edge of the cylinder half filled by a roll of supple alkaline caoutchouc mixed with ·25 of tow. The door being firmly closed, steam is injected through a pipe full of holes fitted to the bottom throughout the whole cylinder.

The steam, furnished by a boiler under a pressure of five atmospheres, is gradually distributed so as to raise very slowly, in two or three hours, the temperature in the interior of the cylinder to 275°.

This temperature is maintained for seven hours.

If tablets of caoutchouc of 10 to 12 millimètres thick had been employed, it would have been necessary to raise the temperature more slowly, say in four hours, to 275°, and to keep it there during eight hours.

The injection of steam is then stopped, and they are allowed to cool slightly, after which the air is readmitted into the cylinder. The door may then be removed, the frames withdrawn, and when completely cold the caoutchouc lifted off, the tablets having become very firm by the combination of the sulphur with the caoutchouc. If the proportion of sulphur were augmented, or if the temperature were raised too high, the product would become harder, but it would be too fragile. It has been proved that by mixing an excess of sulphur a hard and brittle compound can be obtained, containing ·48 of sulphur combined; whilst hard india-rubber of good quality should contain only ·33 of sulphur.

During the sulphuration in the cylinder, the steam in condensing falls in drops of water upon the yet soft tablets. The water bringing with it the rust (oxide of iron) formed upon the inner surface of the cylinder, these substances often penetrate deep enough to form bubbles and faults in the thickness of the tablets, and so lessen much the value of the articles made from them.

A method could probably be devised to prevent these defects, either by maintaining the pieces of caoutchouc in a vertical position between two sheets of tin, or by placing, above the bed-plate which carries the inclined frames, two sheets of tin in the form of a ridge-roof; a roof of this kind would receive the drops of water from above and would cause them to drain off beyond the tablets.

After the tablets are manufactured, they are employed principally as raw materials for combs. For this purpose the tablets are cut into the usual forms by means of a narrow saw, called a fret-saw, which follows the outlines already traced by a steel point. The pieces thus cut up are thinned towards one of their edges, like a sword blade, by means of planes, and further smoothed by rubbing them on a slate. The teeth are then cut by a circular saw. Nothing then remains but to polish them, which is easily accomplished by rubbing them with a mixture of powdered pumice-stone and tallow.

Pieces of various shapes may be sawn out, turned, or planed, and then easily bent, by dipping them for some minutes into boiling water, or by heating them in a stove. If they are plunged into cold water after they are bent, they will immediately set in the acquired form.

The thick sulphured paste of caoutchouc may easily be spread upon bronze moulds, bas-reliefs, and these medallions afterwards exposed in the steam-cylinder to the temperature of 275°; when cold they retain the acquired forms, with the polish of the moulds.

INDICATOR. FR., *Indicateur;* GER., *Indicator;* ITAL., *Indicatore.*

The steam-engine *indicator* is an instrument for ascertaining the pressure of the steam in the cylinder of steam-engines, and the law of its variation during expansion, and during a double stroke of the piston. The instrument was invented by Watt and improved by MacNaught. In its simplest form, it consists of a small hollow cylinder A A, Fig. 4203, which may be screwed upon the head of the cylinder of the steam-engine; steam is let into it by means of the cock R. A piston, the rod of which is visible through the longitudinal aperture *f f*, works in this cylinder A A, and through the upper end. The rod is surrounded with a spiral spring fixed to the small piston and to the upper end of the cylinder A A. The steam, in virtue of the pressure which it exerts upon the small piston, compresses this spring; and, if the spring is carefully made, the quantity by which it is compressed in the vertical direction is proportional to the pressure exerted upon the small piston; so that the pressure in the cylinder of the engine is measured by the quantity by which the small piston rises above its initial position, which position answers to a pressure of *o*, or to an absence of pressure. This displacement of the small piston is measured on the outside by means of a style *i* K, fixed to the rod by a stud projecting through the longitudinal opening. The end *i*, of this style moves over a divided scale fixed to the cylinder, and this gives the measure of the pressure.

The instrument is very valuable, even when reduced to the parts which we have just described, as it enables us to ascertain the pressure in the steam-cylinder, a pressure that is always

considerably less than that exerted in the boiler, and which is measured by the gauge. But the improvements which have been made in it enable it to register the variations of pressure, and to express the law of the variations by a curve. The following description will show how this is done;—Upon a support fixed to the cylinder A A, is a drum T, revolving about its axis and having a strip of paper rolled round it. A groove on the lower end of this drum holds a cord which passes over a pulley *p*, with a horizontal axis and fixed upon the same support, and is carried up vertically to a horizontal arm or stud on the engine piston-rod. It follows from this that the drum turns upon its axis by a quantity proportional to the displacement of the piston of the engine. A spring, similar to the main-spring of a watch, fixed inside to the side of the drum and to a fixed point, being compressed during the rotation of the drum, corresponding to the upward stroke of the engine-piston, brings back the drum to its original position during the downward stroke. To the end K of the style *i* K, is fitted a pencil, which makes an obtuse angle with the style, and the point of which rests upon the drum. During the simultaneous motion of the small piston and the drum, this pencil traces upon the surface of the latter a curve which expresses the law of the variation of the pressure in the engine-cylinder; for the displacements of the pencil in the vertical direction, reckoning from the position corresponding to a pressure of *o*, are proportional to the pressure, and the rotation of the drum is proportional to the distance traversed by the engine-piston.

4203.

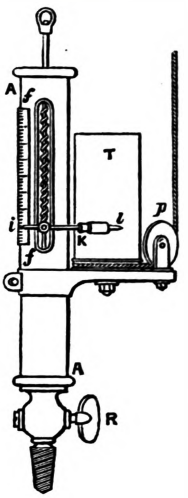

The arrangement we have described supposes that the circumference of the groove of the drum is at least equal to the stroke of the piston; but as this condition cannot always be conveniently fulfilled, the cord on coming from the groove is made to pass first over a little windlass moving with the pulley *p*, and having the same axis; a second cord, attached to the groove of the pulley, to which a sufficiently large radius may be given to make its circumference exceed the stroke of the piston, is carried up vertically and fixed to the engine-piston in the way described above. By this means the indicator may be applied to widely-different strokes.

If the sheet of paper which was rolled round the drum be unrolled after the experiment, we obtain a curve or diagram similar to Fig. 4204, and representing the law of the variation of the pressure during a double stroke of the piston. In a previous experiment, and before the indicator was screwed upon the cylinder of the engine, the drum was turned, and the pencil traced the horizontal straight line O X, which corresponds to a pressure of *o*, since the pressure of the atmosphere was then acting upon both ends of the little piston. The straight line D H was also drawn corresponding to one atmosphere, which is very easy, knowing the compression to which the spiral spring is subjected under the pressure of a given weight. Then let M P be the ordinate of any part of the curve with respect to O X, which ordinate meets in I the horizontal D H. The ratio of M P to I P will express the ratio of the pressure of the steam in the cylinder to the pressure of the atmosphere, for the position of the piston corresponding to a fraction of the stroke marked by the ratio of O P to O X (O X being the whole stroke). Instead of expressing the pressure by a ratio, it may be expressed by a number of kilogrammes to the square centimètre, by merely choosing a scale in which I P shall represent $1^{k}\cdot033$, or by a number of pounds to the square inch by making the corresponding suppositions.

4204.

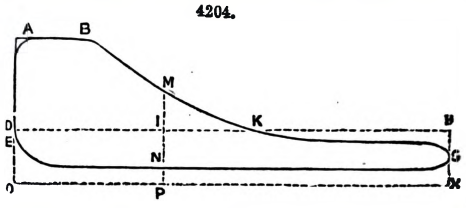

It will be seen by a reference to the diagram that the portion A B corresponds to the period of admission of the steam into the cylinder. The portion B M C corresponds to the period of expansion; the pressure, which was greater than that of the atmosphere, becomes equal to it for the position of the piston corresponding to the point K, after which it becomes less. The portion C N D corresponds to the period of emission during which the pressure is that of the condenser. This latter portion of the curve joins itself to the first at the end of this second stroke, and the diagram is the closed curve. When a certain advance is given to the admission or the emission, every circumstance of the motion is represented by the diagram.

This diagram enables us also to calculate the work corresponding to a stroke of the piston. Since the ordinate M P expresses the pressure, and the abscissa O P the distance passed over, the work of the steam upon the piston during a stroke is represented by the area O A B C X O. But for a similar reason, the work exerted upon the same face of the piston during the following stroke is expressed by the area O E N C X O. Consequently, the work developed upon the piston during one stroke is the difference of the two preceding, that is, it is expressed by the area comprised in the closed curve forming the diagram. This area may be computed by means of the *planimeter*, or by an approximative formula.

The form of steam-engine indicator formerly in general use was the MacNaught Indicator, just described, in which the piston and its guiding rod have the same range of motion as the pencil; but as the piston and rod were necessarily made quite heavy, and their range of motion extensive, in order to produce delineations on a sufficiently large scale, the momentum of these parts was so great, and the tremulousness of the spring so considerable, as to render the instrument unserviceable for application to engines having rapid movements. These defects have been remedied in the Richard's Indicator, the invention of Chas. Richards, of Connecticut, U.S.

Fig. 4205 is a plan of this instrument; Fig. 4206 is a side elevation; Fig. 4207 is a vertical section through the centre of the spring-case A; and Figs. 4208 to 4211 show parts of the instrument in detail.

4206.

4205.

4209.

4208.

4210.

4211.

4207.

A is a cylindrical case containing a small steam-cylinder B, in which moves a piston C, the movements of which are regulated by a spiral spring D. These parts are constructed and arranged in a manner similar to, but are much shorter than the corresponding parts of, an ordinary MacNaught indicator, making delineations on the same scale. To the outside of the case A is secured a ferrule E, an arm from which supports a cylindrical paper-holder F, which, in construction and arrangement, is similar to the paper-holding drum of a MacNaught indicator, and it receives the proper reciprocating movements in the same manner. Around the upper part of the case A is a ferrule G, to which are attached two arms H and J, one of which, J, supports the fulcrum pin K of a light lever L, the extreme end of which lever is jointed to the end of a lever or link M, the opposite end of which is jointed to the extremity of a delicate lever or radius bar N, the fulcrum pin O of which is supported by the arm H. To the lever L, at a point distant from its fulcrum K, about one-fourth of the length of the lever, the rod P of the piston C is connected by means of a forked link Q, which is jointed by a knuckle R to the upper end of the rod P. In the centre of the link M is a holder for the pencil S, which receives from the piston C, through the lever L, a range of perpendicular motion about four times greater than that of the piston, and the levers L and N are so proportioned and their fulcrums are so adjusted that the marking-point of the pencil S is caused to move in a straight line in the same manner that the parallel motion of a steam-engine causes the end of the piston-rod to move in a straight line. The movements of the lever are indicated in Fig. 4206.

The indicators made by Elliot Brothers, London, the sole manufacturers in England, are of a uniform size; the area of the cylinder is one-half of a square inch, its diameter being ·7979 of an inch. The piston is not fitted quite steam-tight, but is permitted to leak a little; this renders its action more nearly frictionless, and does not at all affect the pressure on either side of it. The motion of the piston is $\frac{25}{32}$ of an inch, and the motion of the pencil, or extreme height of the diagram, is $3\frac{1}{8}$ in. The paper cylinder is 2 in. in diameter, and the length of the diagram may be $5\frac{1}{4}$ in., if this extent of motion is given to the cord. The diagram is drawn by a pointed brass wire on metallic paper. This is a great improvement over the pencil; the point lasts a long time, cannot be broken off, and is readily sharpened, and the diagram is indelible. The steam-passage has two or three times the area usually given to it. The stem of the indicator is conical, and fits in a corresponding seat in the stop-cock, where it is held by a peculiar coupling. The leading pulleys may be turned by some pressure to give any desired direction to the cord, and will remain where they are set.

The Springs.—In order to adapt this indicator for use on engines of every class, springs are made for it by Elliot Brothers to ten different scales, as follows;—

No. 1,	$\frac{1}{8}$	-in. motion,	shows 1 lb.	pressure on the sq. in.;	indicates from	− 15	to	+ 10
„ 2,	$\frac{1}{12}$	„	„	„	„	− 15	„	+ 22·5
„ 3,	$\frac{1}{16}$	„	„	„	„	− 15	„	+ 35
„ 4,	$\frac{1}{20}$	„	„	„	„	− 15	„	+ 47
„ 5,	$\frac{1}{24}$	„	„	„	„	− 15	„	+ 60
„ 6,	$\frac{1}{30}$	„	„	„	„	Atmosphere	to	+ 80
„ 7,	$\frac{1}{32}$	„	„	„	„	„	„	+ 100
„ 8,	$\frac{1}{40}$	„	„	„	„	„	„	+ 125
„ 9,	$\frac{1}{48}$	„	„	„	„	„	„	+ 150
„ 10,	$\frac{1}{56}$	„	„	„	„	„	„	+ 175

Most of the scales are multiples of 8, and the common rule will measure the diagrams, if the proper scale is not at hand. It will be observed that the five higher scales do not indicate the vacuum. These are so made for the following reasons;—The far greater number of engines which work steam at high pressures do not condense; and, moreover, at these pressures, the scale of the indication necessarily becomes small, while it is always desirable to show the vacuum on a large scale. Spring No. 1 may be employed to indicate the vacuum in engines which work steam at high pressures and with condensation. It can be readily substituted in the indicator, and the diagram given by it will be on a satisfactory scale. It is provided with a stop, which prevents it from being compressed too much, so that a high pressure of steam will not injure it. Moreover, the vacuum being omitted from the scales, which go above 60 lbs., the entire range of the pencil is available for the pressures above the atmosphere, which are therefore shown on a somewhat larger scale. The springs indicating pressures above 60 lbs. will be made, however, to indicate the vacuum also when so ordered.

The springs are tested with a highly sensitive apparatus, designed expressly for the purpose, and are corrected for a temperature of 212°, which is the temperature at which they will work under almost all circumstances, and at which their accuracy is guaranteed.

We extract from Charles T. Porter's work on the Indicator the following practical directions for applying the instrument.

Attaching the Indicator.—When it is practicable, diagrams should be taken from each end of the cylinder. The assumption commonly made, that if the valves are set equal, the diagram from one end will be like that from the other, will be shown by this instrument to be erroneous. This is owing to the difference in the speed of the piston at the opposite ends of the cylinder, which is, at the outer end of a direct-acting engine, from 35 per cent. to 66 per cent. greater than at the crank end, the difference varying according to the degree of the angular vibration of the connecting rod. In side-lever or beam engines these proportions are reversed, and the speed of the piston is greater at the upper end of the cylinder. Often also there is a difference in the lengths of the thoroughfares, and in the lead, or the amount of opening, or the point of closing; and many times the valves are supposed to be correctly set, when this indicator will show that they are not. These and many other causes will make a difference in the diagrams obtained from the opposite sides of the piston.

One use of the indicator is in fact to show whether or not the diagrams from opposite ends of the cylinder are alike.

Pipes to be avoided.—The indicator should be fixed close to the cylinder, especially on engines working at high speeds. If pipes must be used, they should not be smaller than ½ in. in diameter and ⅝ in the bends, and as short and direct as possible. Any engineer can satisfy himself with this instrument that each inch of pipe occasions a perceptible fall of pressure between the engine and the indicator, varying according to its size and number of bends and the speed of the piston. Diagrams have been known to show, from this cause alone, 40 per cent. less pressure than was actually in the cylinder. Probably the diagrams taken from engines generally show in nine cases out of ten the lead or the pressure or both untruly, from the incorrect manner in which the instrument is attached.

Where to connect the Indicator.—On vertical cylinders, for the upper end, the indicator-cock is usually screwed into the cover. Sometimes it is attached where the oil-cup is set, this being removed for the purpose. For the lower end, it is necessary to drill into the side of the cylinder, at a convenient point in the space between the cylinder bottom and the piston, when on the centre, and screw in a short bent pipe, with a socket on the end to receive the indicator-cock. The indicator can be used in a horizontal position, but it will be found much more convenient to put in a bent pipe, and set it vertical. Sometimes it will be necessary to drill in the side of the cylinder, at the upper end also, especially in double-cylinder engines having parallel motions, when the indicator cannot generally be set on the covers. Care must be taken that the piston does not cover the hole when on the centre. No putty is necessary to make these small joints, and it should never be used, as it is liable to clog the instrument. If the screw fits loosely, a few threads of cotton wound round the stem will prevent the escape of steam.

On horizontal engines, the best place for the indicator is on the top or upper side, at each end; if it cannot be placed there, bent pipes may be screwed into the covers or into the side of the cylinder. In other respects follow the directions given for vertical engines. The indicator should never be set to communicate with the thoroughfares. The current of steam past the end of the pipe or the hole reduces the pressure in the instrument, and the diagram given is utterly worthless.

The stop-cock being screwed firmly to its place, screw the indicator down to its seat, turning it to the most convenient position, and make it fast by turning the coupling; then move the guiding pulleys to their proper position to receive the cord, and the instrument is in readiness for use.

Giving Motion to the Paper.—The motion may be taken from any part of the engine which has a motion coincident with that of the piston. For a beam-engine, a point on the beam or beam-centre, or on the parallel-motion rods where these are employed, will give the proper motion; but care must be taken that the cord be led off in the right direction—a requirement which is sometimes overlooked; afterwards its direction of motion may be changed as required.

In some cases it is most convenient to take the motion from a point on the end of the revolving shaft; this is frequently the case on horizontal engines working at high speeds, because then the motion does not need to be reduced. Exact accuracy cannot be got in this way, however, without employing a moving slide, and connecting it with the pin in the end of the shaft by a rod or cord of such length that its angular vibration shall be the same as that of the connecting rod. This will be found generally a troublesome matter; and the engineer will probably prefer in most cases to disregard the error resulting from its omission, which is, that the motion of the paper will be more nearly equal at the two ends of the stroke, being slower than that of the piston at the one end, and faster at the other. The crank or pin from which the cord receives its motion must be on its centre, relatively to the direction of the cord, whatever that direction may be, precisely when the crank of the engine is on its centre. If this requirement is not carefully attended to, the diagram will be worthless.

Generally, on horizontal engines, the motion of the paper is taken from the cross-head. In an engine-room, a strip of deal board may be suspended from the ceiling in such a manner as to permit it to swing backward and forward edgeways by the side of the guides, and motion may be given to it by a pin, secured firmly to the cross-head and projecting through a slot in the board, in which it should fit nicely to prevent lost time on the centres. The board must hang plumb when the piston is in the middle of its stroke. The cord may be connected to this strip of board at a point sufficiently near to its point of suspension to give the required reduction of motion for the paper, and must be led off in a horizontal direction, and then over one or more pulleys in any required direction to the indicator. At high speeds, however, pulleys should be avoided. On portable engines, the motion may be obtained in the manner just described, the lever swinging from a pin supported in a standard about 2 ft. in height, set on one of the guide-bars.

On locomotives having outside connections the motion must be taken from the cross-head. It is indispensably necessary to use only a short direct cord, free from elasticity, and connected to a point the motion of which is reduced from that of the cross-head by positive means. Care must be taken also so to proportion the parts employed for this purpose, that the point at which the cord is connected shall have a positive motion without any fling, a matter not by any means free from difficulty at 250 revolutions a minute. A rock-shaft, turning in bushings, supported by two angle-iron standards, precisely over the mid-position of that point of the cross-head from which the motion is derived, affords perhaps the best means of reducing the motion. A long arm is worked by the cross-head, and a short arm gives motion to the cord. The short arm must be keyed in such a position that when the piston is in the middle of its stroke it will stand at right angles with the direction of the cord, whatever that may be. The direction of the cord may form any necessary angle with the horizontal line, but must be at right angles with the rock-shaft.

On locomotives having inside connections and a single pair of driving wheels, where it is practicable, it will be found to be the better way to take the motion from a pin set in the end of the shaft, and to communicate it by a connecting rod to a point convenient for attaching the cord. The

parts should be all substantially made; the momentum of the connecting rod will be perfectly resisted by the pin.

On oscillating engines, the motion may be taken from the brasses at the end of the piston-rod. If the stroke is long, it is sometimes difficult to reduce this motion to that required for the paper, and in such cases it is necessary to take the motion from an eccentric on the main shaft to a point as near as possible to the trunnion, and thence to communicate it to the indicator. In all these connections, it is of the first consequence that there be no lost time, which will require to be made up on every centre, and will thus cause the paper to stand still while the piston is moving.

Pulleys of different diameters on the same spindle have been often used as a means of reducing the motion from that of the cross-head, but we do not recommend them; at high speeds it is very difficult to make them answer.

How to take a Diagram.—To fix the paper, take the outer cylinder off from the instrument, secure the lower edge of the paper, near the corner, by one spring, then bend the paper round the cylinder, and insert the other corner between the springs. The paper should be long enough to let each end project at least ½ an inch between the springs. Take the two projecting ends with the thumb and finger, and draw the paper down, taking care that it lies quite smooth and tight, and that the corners come fairly together, and replace the cylinder. The spring used on this indicator for holding the paper will be found preferable to the hinged clamp. A little practice, with attention to the above directions, will enable anyone to fix the paper very readily.

The marking-point should be fine and smooth, so as to draw a fine line, but not cut the paper. It may be made of a brass wire; the best material is gun-metal, which keeps sharp for a long time, and the line made by it is very durable. Lines drawn by German-silver points are liable to fade. A large-sized common pin, a little blunted, answers for a marking-point very well indeed; a small file and bit of emery cloth used occasionally will keep the point in order.

To connect the Cord.—The indicator having been attached, and the correct motion obtained for the drum, and the paper fixed, the next thing is to see that the cord is of the proper length to bring the diagram in its right place on the paper, that is, midway between the springs which hold the paper on the drum. In order to connect and disconnect readily, the short cord on the indicator is furnished with a hook, and at the end of the cord coming from the engine a running loop may be rove in a thin strip of metal, so that it can be readily adjusted to the proper length, and taken up from time to time, as it may become stretched by use. On high-speed engines, it is as well, instead of using this, to adjust the cord and take up the stretching, as it takes place, by tying knots in the cord. If the cord becomes wet and shrinks, the knots may need to be untied, but this rarely happens. The length of the diagram drawn at high speeds should not exceed 4½ in., to allow changes in the length of the cord to take place to some extent, without causing the drum to revolve to the limit of its motion in either direction. On the other hand, the diagram should never be drawn shorter than is necessary for this purpose.

To take the Diagram.—Everything being in readiness, turn the handle of the stop-cock to a vertical position, and let the piston of the indicator play for a few moments, while the instrument becomes warmed. Then turn the handle horizontally to the position in which the communication is opened between the under side of the piston and the atmosphere, hook on the cord, and draw the atmospheric line. Then turn the handle back to its vertical position and take the diagram. When the handle stands vertical, the communication with the cylinder is wide open, and care should be observed that it does stand in that position whenever a diagram is taken, so that this communication shall not be in the least obstructed. The instrument is provided with a stop, to prevent the marking-point from tearing the paper. The arm is to be pressed firmly up to this stop. If the line drawn is faint, the point must be screwed up, and back if the line is too heavy. The elasticity of the parallel arms gives the light pressure required on the paper. As the hand of the operator cannot follow the motions of an oscillating cylinder, it is necessary that the point be held in contact with the paper by a light spring, and instruments to be used on engines of this class are furnished with an attachment for this purpose.

Diagrams should not be taken from an engine until some time after starting, so that the water condensed in warming the cylinder, &c., shall have passed away. Water in the cylinder in excess always distorts the diagram, and sometimes into very singular forms. The drip-cocks should be shut when diagrams are being taken.

As soon as the diagram is taken, unhook the cord; the paper cylinder should not be kept in motion unnecessarily, it only wears out the spring, especially at high velocities. Then remove the paper, and minute on the back of it at once as many of the following particulars as there are the means of ascertaining;—

The date of taking the diagram, and scale of the indicator.

The engine from which the diagram is taken, which end, and which engine, if one of a pair.

The length of the stroke, the diameter of the cylinder, and the number of double strokes a minute.

The size of the ports, the kind of valve employed, the lap and lead of the valve, and the exhaust lead.

The amount which the waste-room, in clearance and thoroughfares, adds to the length of the cylinder.

The pressure of steam in the boiler, the diameter and length of the pipe, the size and position of the throttle, if any, and the point of cut-off.

On a locomotive, the diameter of the driving wheels, and the size of the blast orifice, the weight of the train, and the gradient, or curve.

On a condensing engine, the vacuum by the gauge, the kind of condenser employed, the quantity of water used for one stroke of the engine, its temperature, and that of the discharge, the size of the air-pump and length of its stroke, whether single or double acting, and, if driven independently of the engine, the number of its strokes a minute, and the height of the barometer.

The description of boiler used, the temperature of the feed-water, the consumption of fuel and

of water an hour, and whether the boilers, pipes, and engine are protected from loss of heat by radiation, and if so to what extent.

In addition to these, there are often special circumstances which should be noted.

How to change the Springs.—Unscrew the coupling from the end of the piston stem, the cover from the cylinder case, and the spring from the piston and cover, introduce the new spring, and screw all firmly up again.

The lengths of the springs for the different scales are so proportioned to each other, that the pencil will always come to the proper position for drawing the atmospheric line. In putting in the spring No. 1, the head from which the barrel projects to stop the compression of the spring should be screwed to the cover and not to the piston. Be careful that the heads are screwed up firmly to the piston and cover.

The spring which gives reaction to the paper cylinder is liable to break after considerable use, especially on engines running at high speeds, for which reason this cylinder should never be left to run unnecessarily. When breakage occurs a new spring can be readily substituted, as follows. Set the indicator on the engine, if there is no other convenient means for holding it firmly, and remove the cover of the spring-case and the broken spring. Then hook the new spring on to the hook projecting from the ferrule on the arbor, coil it into the case, and hook the end on the rim; see that it is coiled in the same direction with the cord. If the spring has not sufficient strength to keep the cord quite tight, another coil must be given to it, but it should not be coiled any tighter than is necessary for this purpose.

Use of the Diagram.—The custom was introduced by Watt, and has since been generally followed in England, to designate the size of engines, in measures of horse-power. Watt ascertained by experiment that the power of London draught horses, exerted with ordinary continuance, was to lift 33,000 lbs. one foot in a minute, and this is now employed, wherever English measurements are used, as the unit of measurement of the actual power of steam-engines.

When this measurement was introduced, steam was used only at the atmospheric pressure, or 14·7 lbs. on the square inch, of which 4·7 was considered to be lost by imperfect condensation, and 3 lbs. by the friction of the engine, leaving 7 lbs. for effective pressure upon the piston, and the speed of piston employed was about 220 ft. a minute. At the present day, pressures are employed varying from one to ten or twelve atmospheres, the former, however, being now rarely met with, and the speeds of piston range from 220 to 1000 ft. a minute. Originally, the number of horse-powers defined at once the size and the power of the engine; but when a variety of pressures and speeds came to be employed, the same expression could no longer answer both of these purposes, and a distinction was introduced and still prevails between the nominal and the actual horse-power, the former being applied to the size of engines, irrespective of the pressure or speed employed, and the latter to the power which they exert. The term nominal horse-power has, moreover, acquired a variety of significations in different localities, and it has become difficult to tell, in any case, precisely what is meant by it.

4212.

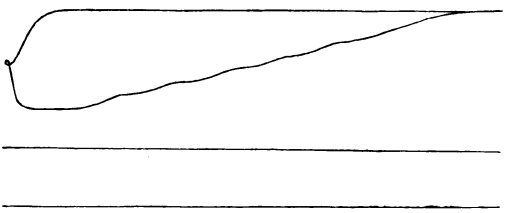

The indicator furnishes one of the data for ascertaining the actual power exerted by the steam-engine; namely, the mean or average pressure of steam during the stroke, on each square inch of the piston; or, more accurately, the excess of pressure on the acting side of the piston to produce motion, over that on the opposite side to resist it. It is of no consequence, in this respect, what the character of the diagram may be, whether most wasteful,

4213.

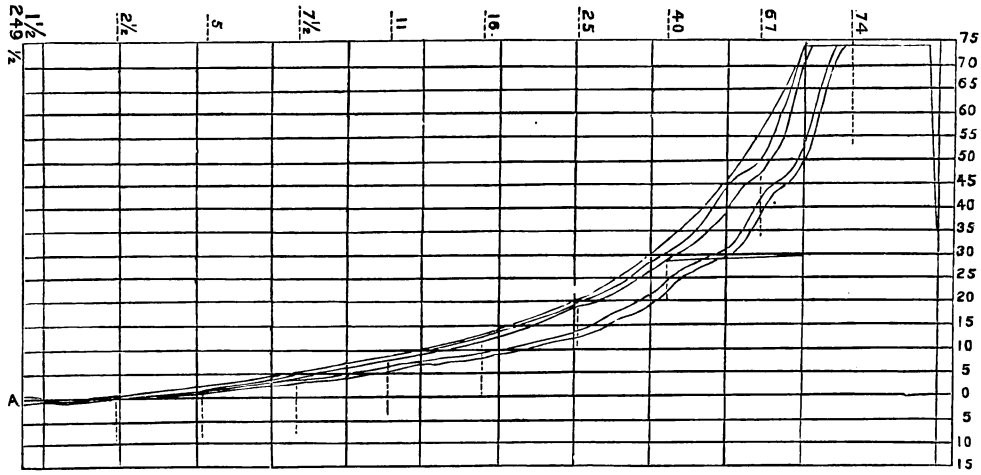

like the one shown in Fig. 4212, or most economical, like Fig. 4213. For the purpose of ascertaining the power exerted, we have merely to measure its included area, and so get the mean

pressure on a square inch during the stroke, which this area represents. This pressure being multiplied into the whole number of square inches, and the product by the mean or average speed of the piston, in feet a minute, gives the total number of pounds of force acting through one foot in a minute, and by dividing this by 33,000, we obtain the gross power of the engine in actual horse-powers. The English unit of force is the foot-pound; and 33,000 foot-pounds exerted in one minute make a horse-power.

In order to ascertain the effective power, however, there must be deducted from the gross power the friction of the engine, or the power required to drive the engine alone at the same speed, which, except in the case of vessels with the wheels submerged, the indicator generally enables us to ascertain; and also the increase in this friction which arises when the resistance is being overcome, which the indicator does not show. The amount of this latter is not generally known with any accuracy; but we know that the percentage of loss from this cause diminishes as the size of the engine is enlarged, because the increase in the motion of the surfaces in contact is much slower than the increase in the area of the piston, and also that it varies according to the nature of the lubricating material employed, and the degree of completeness attained in the separation of the surfaces by means of it. Five per cent. is usually allowed for this increase of friction, but it may in fact be considerably more or less than this. On small engines, the friction-brake can be applied, to show the amount of effective power exerted, and a comparison of this with the gross power, and with the friction of the engine alone, as shown by the indicator, will exhibit the increase of friction occasioned by different amounts of resistance, and show the value of different lubricants, and the utility of extended wearing surfaces.

We will now describe the mode of ascertaining from the diagram the mean pressures on the opposite sides of the piston, in condensing and in non-condensing engines. For this purpose, divide the diagram into any desired number of equal parts, by lines drawn perpendicular to the atmospheric line. Sometimes these divisions are made very numerous, but the usual practice is to make ten, which number is probably sufficient, unless great accuracy is desired, when twenty divisions may be made. A convenient instrument for facilitating this operation, saving time, and ensuring accuracy, is furnished with these indicators. It consists of a parallel ruler, of eleven bars of thin steel, and a small square. A perpendicular line is first drawn by the square at one end of the diagram, when, the outer edge of bar No. 1 being brought to this line, and the inner edge of bar No. 11 to the opposite end of the diagram, the dividing lines are drawn with a sharp-pointed pencil, or, on the metallic paper, with a common pin. If twenty divisions are desired, the intermediate lines for this purpose will also be readily drawn by means of this instrument, points being first marked in the middle of the outer divisions. It is an excellent practice to divide the diagram into equal divisions, also, by lines drawn parallel with the atmospheric line, each division representing a certain number of pounds pressure, generally five or ten, and the lines being numbered on the margin according to the scale of the indicator; by this means the engineer is able to observe much more accurately the general nature of the diagram. The same instrument may be employed for this purpose.

On diagrams from condensing engines, the line of perfect vacuum should be drawn at the bottom, and the line of the boiler pressure, as shown by the gauge, at the top. The line of perfect vacuum varies in its distance from the atmospheric line, or, more correctly, the latter varies in its distance from the former, according to the pressure of the atmosphere, as shown by the barometer, from 13·72 lbs. on the square inch when the mercury stands at 28 in., to 15 lbs. when it stands at 30·6 in., and it should be drawn according to the fact, if this can be ascertained. The pressure of the atmosphere is usually reckoned at 15 lbs., which is too high, being correct only when the barometer stands at 30·6 in., a most unusual occurrence; but the error is unimportant, and it is very convenient to avoid the use of a fraction, and to say that 30 lbs., 45 lbs., 60 lbs., and so on, represent 2, 3, 4, 5, 6 atmospheres of pressure.

The principal object of knowing the exact pressure of the atmosphere is to ascertain the duty performed by the condenser and air-pump. The temperature of the discharge being known, the pressure of vapour inseparable from that temperature is also known, and this being deducted from the actual pressure of the atmosphere, the remainder is the total attainable vacuum at that temperature.

The areas of the diagram above and below the atmospheric line are usually calculated separately, to ascertain how effectually the resistance of the atmosphere is removed from the non-acting side of the piston, by those parts of the engine whose function this is. In case of engines working very expansively, however, the expansion curve crosses the atmospheric line, and sometimes at an early point of the stroke, as in diagram, Fig. 4213. In such cases, the whole space between the atmospheric line and the line of counter-pressure should be credited to the condenser and air-pump; not, of course, to be considered in estimating the power exerted, but for ascertaining the degree of economy in the consumption of steam, which depends greatly on the amount of vacuum maintained.

The lines having been accurately drawn as above directed, ascertain, by careful measurement with the scale, the mean pressure in each division, between the atmospheric line and the upper outline of the diagram, until this crosses the former, if it does so; add these together, and point off one place of decimals, or divide their sum by the number of divisions, if there are more than ten, and the quotient will be the mean pressure above the atmosphere during the stroke. Then repeat the process for the area between the atmospheric line, or the expansion curve after it has crossed this line, and the lower outline of the diagram. Add the two mean pressures so ascertained together, then find the number of square inches in the surface of the piston, if the diameter is known, and multiply the pressure on one square inch by the number of square inches, and the product by the mean velocity of the piston in feet a minute, and divide by 33,000, and the quotient will be the gross number of horse-powers exerted: or the power represented by the two areas of the diagram, above and below the atmospheric line, may be calculated separately.

The strictly accurate mode of measurement is, to measure the pressure of steam from the line

of perfect vacuum, when the line of 15 lbs. pressure will come a little above the atmospheric line, but it is more convenient, and answers all the purposes of the diagram better, to measure each way from the latter.

The space above the steam line and between this and the line of boiler pressure shows how much the pressure is reduced in the cylinder by throttling, or by the insufficient area of the ports, proper allowance being made for the difference of pressure necessary to give the required motion to the steam in the pipe; whilst the space between the line of counter-pressure and the line of perfect vacuum shows the amount of resistance to the motion of the piston.

4213a.

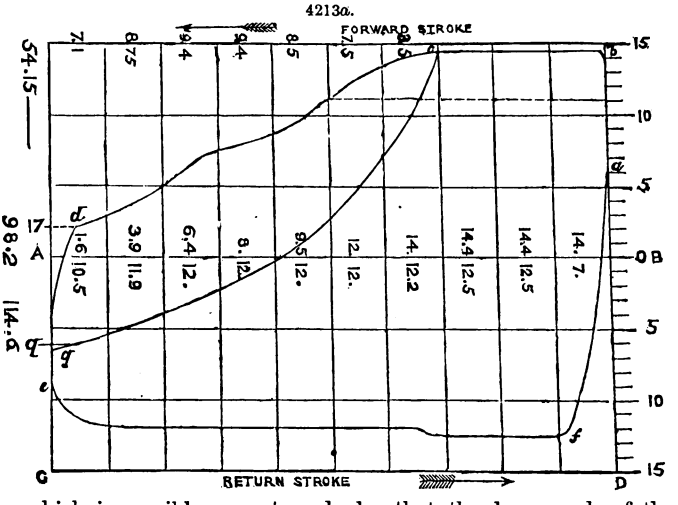

In illustration of the foregoing directions, let it be required to find the effective power exerted by the pair of engines, from the upper end of one of which the diagram, Fig. 4213*a*, was taken, the diameter of the cylinder being 95 in., the stroke of the piston 10 ft., and the number of revolutions 15 a minute. We will assume that the other engine would have given the same diagram, which is possibly correct, and also that the lower ends of the cylinders would have given the same, which is probably quite incorrect, because in side-lever or beam engines the speed of the piston at the lower end is slower, and therefore probably the pressure obtained is greater than in the upper end, the motion of the valves being the same.

The mean pressure of steam above the atmosphere was .. 98·2 ÷ 10 = 9·82 lbs.
The average vacuum was .. .. 114·6 ÷ 10 = 11·46 „

Total excess of pressure above the resistance was .. .. 21·28 „

The better mode of calculation in all cases is to obtain first the number of horse-powers for 1 lb. of mean pressure on the square inch as follows;—

No. of square inches in the surface of the piston .. .. .. 7088·2
Speed of the piston in feet a minute, 15 × 20 = ... 300

21264600

21264600 ÷ 33000 = 64·44

No. of horse-powers exerted for each pound of pressure during the stroke on 1 sq. in. of the piston .. .. 64·44
To obtain the gross power we multiply this by .. .. 21·28

Then the gross horse-powers exerted in one engine .. .. 1371·2832

To obtain the effective power, we must subtract from the multiplier .. .. 21·28 lbs.
The pressure required to run the engine alone, which in so large an engine would probably not exceed .. 1·00 lb.
And the increase in this pressure required to overcome the increased friction when the resistance is being overcome, say 5 per cent. .. .. = 1·06 „
2·06 „

Effective pressure on each square inch .. .. 19·22 „
Which multiplied by .. .. 64·44 „ = 1238·5368

Given amount of effective horse-power .. .. 1238·5368
Which multiplied by 2

Gives .. .. 2477·0 horse-power
as the effective power of the pair of engines.

It will be observed that, by the above mode of calculation, we obtain for any engine, the speed of piston continuing the same, a constant number, which, multiplied by the mean pressure on a square inch, gives at once the amount of horse-power exerted at any time.

On diagrams from non-condensing engines, the line of boiler pressure should be drawn at the top, and it is well to draw the line of perfect vacuum also, that the engineer may be able to see at a glance the quantity of steam consumed, and to compare with it the amount of work done. It is not possible that the back pressure resisting the motion of the piston shall be less than the pressure of the atmosphere, but it may be a great deal more, and very commonly in non-condensing engines the line of

resistance is as much as 2 or 3 lbs. above the atmospheric line, though it is quite possible to avoid this excess altogether.

The mean pressure is ascertained in the manner already directed for obtaining the pressure above the atmospheric line in condensing engines, and the power is calculated in the same way.

In the same manner, on stationary engines, the power shown by the frictional diagrams can be calculated, and also the various powers shown by diagrams taken when the shafting only is being driven, and when greater or lesser proportions of the whole resistance are being overcome; whilst on vessels the effects of different depths of immersion can be determined.

So also the power required in non-condensing engines to overcome the resistance of the atmosphere is readily ascertained.

It often happens, in non-condensing engines working expansively, that the expansion curve falls below the atmospheric line. In such cases the enclosed area below the atmospheric line must be deducted from that above this line to give the power really exerted.

Generally, engines will give the same figure at each revolution, the pencil retracing the same line so long as the resistance continues the same; but sometimes this is not the case. In such cases, care must be taken to obtain the average diagram. Also, in comparing the pressures required to overcome different resistances, it is essential that the speed of the engine in each case be the same—a requirement often disregarded.

Amount of Steam consumed.—For this purpose, draw the line of perfect vacuum, if not precisely known, at 14·7 lbs. below the atmospheric line. Ascertain how much the clearance and the thoroughfare at one end of the cylinder adds to its length, as represented by the stroke of the piston, and add a proportionate quantity to the length of the diagram by a line drawn perpendicular to the atmospheric line, at the proper distance from the admission line. Then ascertain the point in the stroke at which the steam is released, and the pressure in the cylinder at that point. Multiply this pressure, reckoned from the line of perfect vacuum, and which must be taken before the exhaust-port has been opened, by the sectional area of the cylinder in square inches, and the product by the length of the stroke in inches, up to the point at which the steam was released, and including the addition for the clearance and thoroughfare; then divide by 14·7, and the quotient will be the number of cubic inches of steam, at the pressure of the atmosphere, discharged from the cylinder at a single stroke. Multiply this by the number of strokes in an hour, and divide the product by 1728 to reduce the cubic inches to cubic feet, and the quotient again by 1700, to reduce the steam at atmospheric pressure to water, and the result will be the number of cubic feet of water used an hour; multiply this by 62·38 for pounds, and divide the product by 10 for gallons.

In case the steam is worked expansively, there are two points to be noted. First, that the density or pressure of the steam at the point of release is always greater, and commonly very much greater, than it ought to be, in order to account for the quantity of steam at the point of cut-off, the excess being caused by the evaporation of water in the cylinder during the expansion, which water must instantly burst into steam as the pressure falls below that due to its temperature, provided the heat of evaporation can be obtained from the metal; and, second, that generally even that quantity of steam increased in this manner will not account for all the water supplied to the boiler, showing that the chilling of the cylinder during the expansion, down to the temperature of the steam when released, was insufficient to supply heat to evaporate all the water it contained.

We are able, by means of the diagram, first to compare the quantity of steam consumed, measured as above directed, with the amount of power exerted; second, to ascertain the quantity of water evaporated in the cylinder during the expansion; and, third, to compare the steam appearing in the cylinder with the water evaporated in the boiler, or supposed to have been so; for, in fact, we know very little about the proportions of steam and water in the mixture which the boiler supplies. The field here presented is one of the most important in which the indicator can be employed. Different engines, and different boilers with the same engine, are found to give results, in all the above respects, differing most widely from each other.

Vibrations of the Spring.—Sometimes at very high speeds, or with very sudden action of the steam, the spring of the indicator is put into vibration. If the line produced by these vibrations is a waving line quite free from angles, this is an evidence that the action of the instrument is nearly frictionless, and the mean of the vibrations gives the true line.

Diagrams from the Valve-chamber.—These ought always to be taken when it is desired to know about the sufficiency of the ports or valve movements. It is obvious that for this purpose it is necessary to compare the pressure got in the cylinder with that in the valve-chamber. This also shows the sufficiency or insufficiency of the steam-pipes.

See BOILERS. PLANIMETER. And also 'Description of Richards' Steam-Engine Indicator,' by Charles T. Porter, 8vo, 1868; and 'The Indicator Diagram Practically Considered,' by N. P. Burgh, crown 8vo, 1871.

INERTIA. FR., *Inertie;* GER., *Tragheit;* ITAL., *Inerzia;* SPAN., *Inércia.*

Inertia is a quality possessed by all bodies, and is of the utmost importance in mechanical investigations. It may be defined as the tendency of matter to persist in its actual state, whether of motion or of rest. That matter should be incapable of spontaneous change is credible enough, since it is one of the most universal results of human observation, and is equivalent to stating that mere matter is destitute of life; for spontaneous action is the test of the presence of the living principle. Yet the fact, as stated in the above definition, seems at first sight to be in part opposed to the teaching of daily experience. We see that all motion is communicated, and that it comes to an end. The ball set rolling sooner or later stops, and we are led to infer that rest is the normal state of things, and that everything has a tendency to return to its normal state. This is an illusion, however, which reflection quickly dissipates, and we find it impossible to conceive how a body once set in motion can of itself arrest that motion. But it is not strictly true, as some writers affirm, that inertia implies absolute passiveness; for bodies *resist* a change of state. A body at rest resists motion, and a body in motion resists the force which tends to bring it to rest.

Beyond this, however, it is perfectly indifferent to rest or motion. Unnumbered instances daily and hourly fall under our observation of the utter inability of inorganic matter at rest to put itself in motion; but we have not like instances of its inability when in motion to bring itself to rest, since every terrestrial thing sooner or later does come to rest. But if we consider the fact that a ball set rolling upon rough ground quickly stops; that the same ball set rolling with the same initial velocity upon a smooth floor continues its motion much longer, and upon perfectly smooth ice longer still, we are forced to conclude that the motion is destroyed by external causes, as friction, resistance of the air, and gravity, and that if these causes were wholly removed as they have been removed in part, the ball would roll on in a straight line for ever. And that such would be the case is shown by the heavenly bodies, which are not exposed to these retarding influences. These, retaining the same force which was communicated to them "in the beginning," continue to move with a uniform velocity.

Of the numerous effects of inertia, we may instance that produced on a man on horseback by the sudden starting or stopping of the horse. If the horse start suddenly forward from a state of rest, the rider, whose body resists the motion, is thrown backward. If the horse when in rapid motion suddenly stops, the rider, whose body in this case resists the change from motion to rest, is thrown forward. Of similar effects produced by this property of inertia, our daily experience furnishes us with innumerable instances.

INJECTOR. Fr., *Injecteur;* Ger., *Injector;* Ital., *Iniettore.*

An injector is an apparatus frequently employed for feeding boilers with water, and other similar purposes.

Fig. 4214 is of one of Giffard's injectors, of French manufacture. A B C is the body of the apparatus, made in three pieces and screwed together by suitable connections. The upper piece A has a cock D, to which is fixed a tube *a*, communicating with the boiler, and through which steam is admitted. E is the water-branch fastened to a pipe *c*, communicating with the feed-water tank. Steam is first admitted from the boiler through the pipe *a*, and the amount is regulated by the conical spindle G, which fits into the steam-cone *e*. The water drawn through the supply-pipe E by the steam-jet rushing out of the cone *e* into the combining cone *f*, meets with the prime mover, the steam, which imparts a certain amount of its momentum to the water, and this stream consisting of water, condensed water, and steam, in its turn rushes across the small space between the combining and receiving cone *g*, through which it is forced by its superior velocity into the boiler through a pipe *b*, Fig. 4214.

4214.

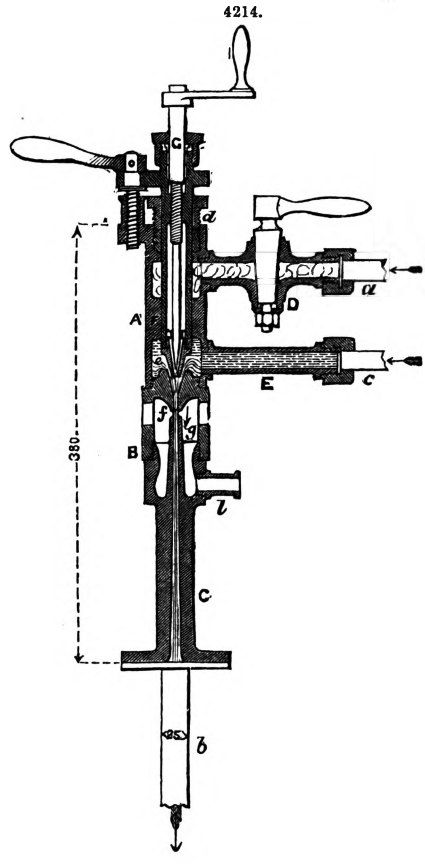

In the experience of the working of Giffard's injector for the supply of water to steam-boilers, which has now come so extensively into use both in this country and abroad, various requirements have been found to arise; and for the purpose of meeting these, several improvements of the instrument have been introduced, one of the most remarkable of which, writes John Robinson in the Transactions I. M. E., is an arrangement invented by William Sellers, of Philadelphia, to obviate the necessity of adjusting by hand the quantity of water supplied to the injector, and thus render the instrument to that extent self-adjusting.

In the original Giffard's injector, shown in Fig. 4215, the quantity of water allowed to reach the combining cone B is adjusted by means of the external regulating hand-screw F, which by raising or depressing the steam-cone A increases or diminishes the annular opening for water. In Sellers' self-adjusting injector this opening is adjusted by the application of a piston in a cylinder, actuated by the amount of pressure or of vacuum existing alternately in the overflow-chamber, according as the supply of water is in excess or deficient.

The construction of the self-adjusting injector is shown in the vertical section, Fig. 4216. The steam-cone and the combining cone are arranged within the receiving cone; and the admission of steam through the steam-cone is regulated as hitherto by the handle D of the steam-spindle. The combining cone at its base is so made as to form a piston, which separates the water-chamber G from the overflow-chamber. The interval, a section of which is shown enlarged, forms the entrance to the receiving cone, and also to the overflow-chamber. The boiler-valve H prevents the water returning from the boiler; and K is a waste-cock, which when open allows the water and steam to issue into the atmosphere.

The mode of working the instrument is as follows;—The waste-cock K being first opened, the supply of water admitted from the tank is allowed to flow out through the waste; and the steam being then turned on by the handle D, an immediate increase takes place in the volume of water escaping at the waste-cock, showing that the jet has been established. The waste-cock is then closed, and the water flows into the boiler through the valve H. In case there should be too

much water admitted to the combining cone, the superabundance will be driven into the overflow-chamber below the piston, and will raise the piston so as to diminish the annular space between the combining cone and the steam-cone, and thus reduce the water supply until the quantity admitted is in exact proportion to the supply of steam. The relative positions of these cones will then remain the same until some change takes place in the pressure of the steam. Supposing the pressure of the steam in the boiler should increase, so that a larger quantity of steam is discharged through the steam-cone, the increased velocity of the jet will carry along with it into the boiler some of the water which had previously escaped through the openings in the interval into the overflow-chamber, and will thus produce a partial vacuum under the piston; the pressure of the water will then cause the piston to recede from the steam-cone and admit more water, until the proper proportion is again established. At the junction of the water-branch G with the main body of the injector a small valve L is provided, opening outwards; and the escape of steam from this valve gives warning that the injector has ceased working from want of water, similarly to the escape of steam from the overflow-pipe M in the original injector, Fig. 4215.

In many boilers, such as those having a small water and steam capacity compared with their heating surface, and where the demand for steam is very irregular, the variations in the steam-pressure are considerable and frequent, and the amount of attention required for regulating an ordinary injector becomes somewhat inconvenient; under such circumstances the ingenious and simple arrangement now described for rendering the injector self-adjusting will be found extremely useful. It is evident that this arrangement of injector does not permit any overflow to take place after the injector is once started. Also, as no air can get admission to the receiving cone of the injector, in consequence of there being no open overflow pipe, the entering water-jet is not impeded in its progress by the contact of air tending to enter with it. In injectors having an open overflow, air can gain access to the entering water-jet, and the quantity of water passing into the boiler is consequently diminished.

4216.

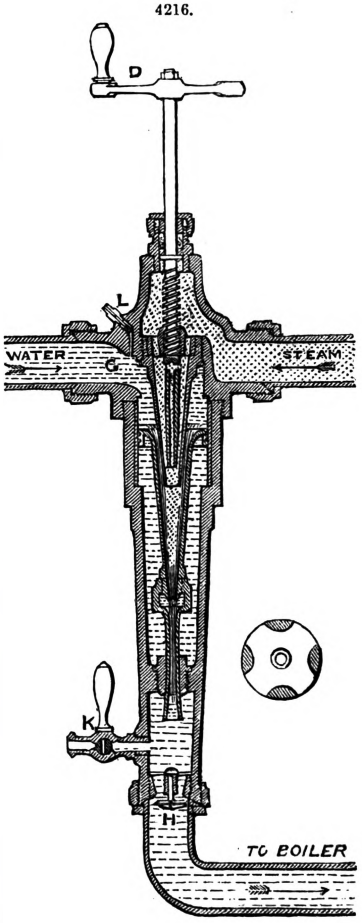

4217.

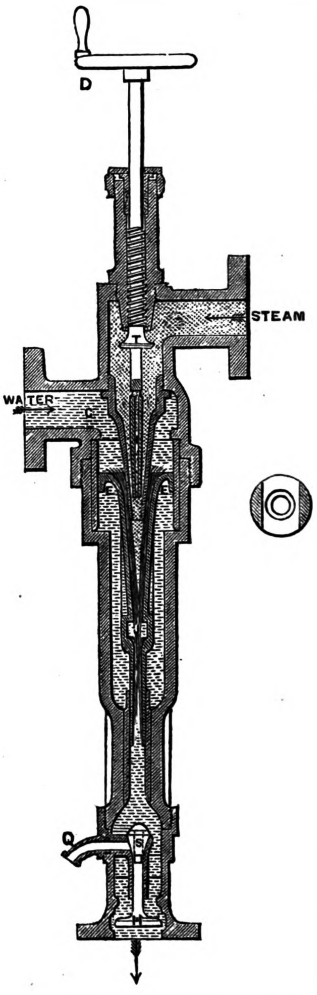

An arrangement for rendering the self-adjusting injector also self-starting has been contrived at J. Robinson's works, in order to obviate the necessity for opening and closing by hand the waste-cock K, Fig. 4216. In the improved injector, shown in Fig. 4217, the spindle of the boiler-valve H carries a smaller conical valve S, which, when the injector is not at work, is always kept open by the pressure of the boiler upon the valve H. When therefore the steam is turned on for starting the injector, the water is first allowed by the valve S to escape through the waste-pipe Q; but as soon as the jet is established, the valve H opens to the boiler, and at the same time closes the conical valve S, and stops the escape through the waste-pipe. This arrangement has the advantage not only of rendering unnecessary the opening and closing by hand of the waste-cock, but also of showing very clearly when the injector ceases working; because when that happens the boiler-valve H is closed by the back pressure from the boiler, opening simultaneously the valve S and allowing the steam and water to escape through the waste-pipe Q.

In Fig. 4218 is shown the improved arrangement of the ordinary injector with hand adjustment, designed by Robinson and Gresham, which has now come into extensive use in place of the original

form of injector. In the original injector, shown in Fig. 4215, the combining cone B and receiving cone C are stationary, and the admission of water is regulated by sliding longitudinally the steam-cone A, which is carried upon the extremity of a hollow cylinder N, passing through a stuffing box at the top of the instrument, and requiring also an internal ring of packing at P, in order to prevent the steam from blowing through into the water-chamber. With high-pressure steam, such as 120 lbs., having a temperature of 350° Fahr., this internal packing becomes injured by the constant exposure to the high temperature whilst working, and involves the trouble of frequent renewal; and in order to obviate this difficulty, the improved injector, shown in Fig. 4218, is constructed with the converse arrangement of the cones, the steam-cone A being made a fixture in the instrument, while the combining cone B and receiving cone C are cast together in a single piece, sliding longitudinally, and are moved by the internal rack and pinion R. By this means the necessity for any internal packing is avoided, as no internal steam-tight joint is required; and at the same time the stuffing box at the top of the sliding cylinder N, Fig. 4215, is also done away with. The sliding cones B and C, Fig. 4218, require only to be turned originally to an easy fit in their external cylindrical guides, as it is not necessary for these joints to be absolutely water-tight. The only additional requirement involved in this arrangement is the stuffing box for the spindle of the pinion R, which is packed externally and has only to be made water-tight, in contrast with the internal steam-tight packing P in the original injector, Fig. 4216.

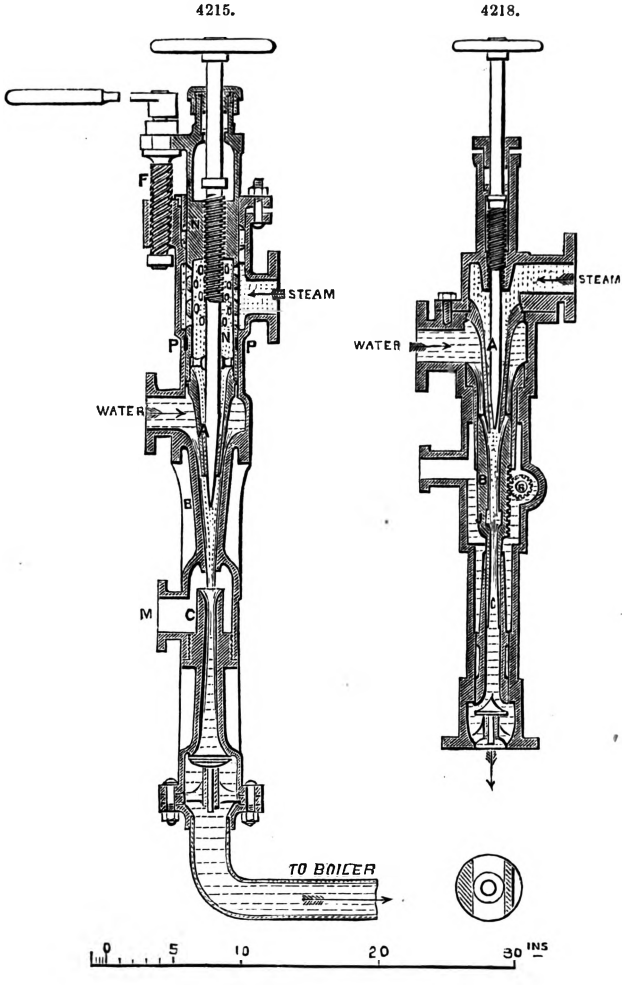

There appears to be a possible drawback to the application of these self-adjusting injectors in cases where a high temperature of supply water is to be used, and especially where that temperature varies, as in the case of a locomotive engine. This drawback consists in the probability that under such circumstances the injector might be difficult to start, because there is no open overflow pipe for allowing the surplus water to escape, and therefore a greater quantity of water cannot be used to condense the steam-jet than can be admitted into the boiler in a given time through the receiving cone of the injector. With the ordinary open overflow, however, a larger quantity of water than can obtain access to the boiler may be admitted to condense the steam current, the surplus escaping at the overflow; and thus a feed can be established, although overflow may at the same time take place.

Endeavours have been made by Andrew Barclay, of Kilmarnock, and others to construct an ordinary Giffard's injector in such a manner that it will draw water from a considerable depth; and this has been successfully accomplished to the extent of lifting the water from a depth of 15 or 18 ft. below the water-chamber of the injector, the temperature of the supply water being 60° Fahr. The construction of injector employed for this purpose is shown in Fig. 4219, and the success is attributable to the care taken to obtain a better vacuum in the water-chamber G by means of double stuffing boxes U and V. One of these, U, prevents the escape of steam into the air, and the other, V, prevents the entrance of air into the water-chamber G. Considerable importance is also attached to the advantage of a shielded steam-cone A, shown to a larger scale, the extremity of the cone being surrounded by an external casing, leaving an air space between of ¼ in. width closed at the bottom, which serves as a non-conductor to prevent the steam from being cooled and cause it to preserve its full heat to the very extremity of the steam-nozzle. The steam-adjusting spindle I is also made to project through the steam-cone A into the combining cone B in the same way as in the original injector, Fig. 4215, so as to secure not only an annular steam-jet but also an annular combined jet; and the spindle is steadied near the extremity by the guide X, to keep it truly central with the jet.

Another arrangement of injector for the same object is shown in Fig. 4220, where the sliding steam-nozzle has only a single stuffing box W, which prevents the ingress of air to the water-chamber; the steam entrance is fixed upon the sliding steam-nozzle, and moves with it, so as to preclude the necessity for a second stuffing box to prevent leakage of steam. This construction requires, however, a flexible steam-pipe, in order to allow for the motion of the sliding steam-nozzle. When the injector is used for lifting water from a lower level, the steam-cone A is first turned down by the regulating screw F to its extreme lowest position, as shown by the dotted lines, leaving a small annular passage for water between the steam-cone and the combining cone. The steam-spindle I is then turned once round, which gives sufficient opening for the amount of steam required to exhaust the water-chamber G. As soon as the water is seen to issue from the overflow-pipe M, the handle F is turned so as to raise the steam-cone A to a position suited to the pressure in the boiler, and the steam-spindle I is drawn back until the overflow ceases.

4219. 4220.

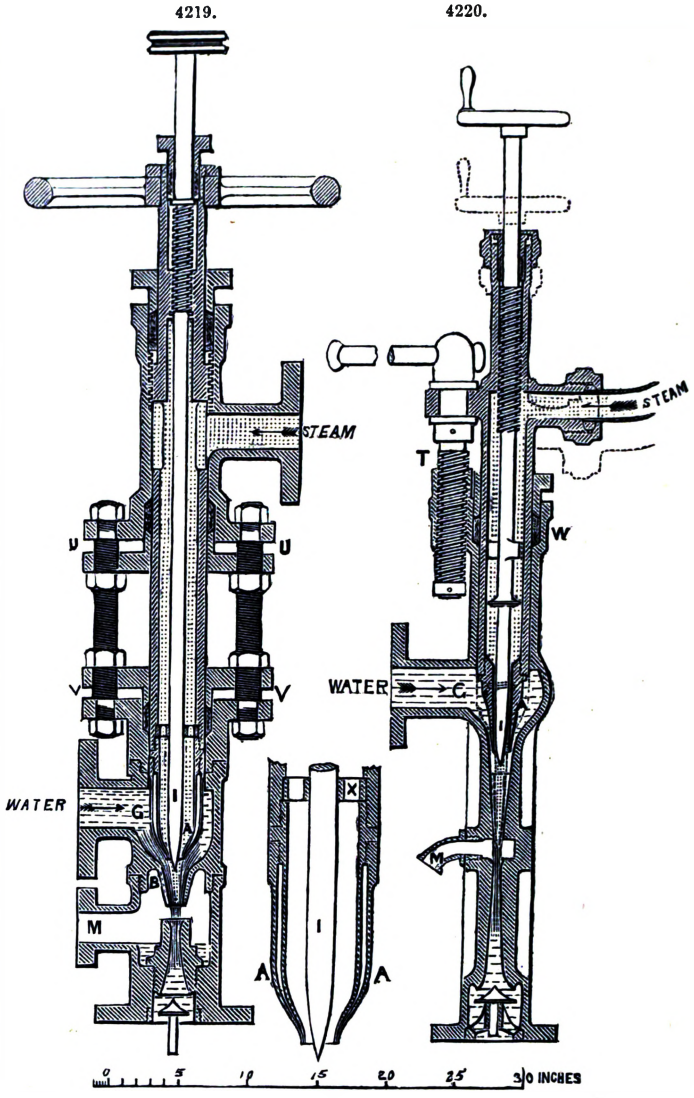

INSULATOR. Fr., *Isoloir;* Ger., *Isolator;* Ital., *Isolatore;* Span., *Aislador.*

In Electricity or Thermotics, an insulator is any body or substance that insulates or acts as a non-conductor.

In Telegraphy, when a wire is suspended on poles, it is fixed to *insulators* to prevent the escape of the current at the points of support; when it is carried underground, through wet tunnels or through water, the insulation must be continuous, and the wire is covered with gutta-percha or india-rubber. See Telegraphy.

IRON. Fr., *Fer;* Ger., *Eisen;* Ital., *Ferro;* Span., *Hierro, y fierro.*

There are two distinct varieties of iron; one is a fibrous metal, or wrought iron; and the other, a granulated or crystallized metal, cast-iron or steel. These varieties of iron are subdivided, as we shall explain hereafter. All iron of commerce is impure; in fact, a pure article would not serve the uses to which iron is commonly applied. Pure iron is silver-white, of a very agreeable, mild, and at the same time brilliant lustre, and of a fibrous fracture. It assumes a high polish, particularly when rubbed with a hard, well-polished substance. Iron is easily tarnished; it has great affinity for oxygen, and acids dissolve it rapidly. Alkalies, in whatever form they may be, protect it remarkably well against corrosion; its sp. gr. is 7·78. It is the most tenacious of the metals, very soft when pure, but becomes extremely hard when alloyed with other metals, or any substance which combines chemically with it. It is singularly affected by magnetic currents; no other metal is more sensitive to that force than iron. Its susceptibility for oxygen, or it may be another cause, imparts a disagreeable taste to pure iron, when applied to the tongue. It also emits a peculiar smell when strongly rubbed. Iron has so great an affinity for other matter, that its existence in a pure condition is very doubtful; at least that presented by chemists, and obtained by them from wire-scraps, filings, hammer-scales, or similar means, cannot be pure. A means of obtaining pure iron is to reduce pure oxide of iron in a glass tube by means of hydrogen; but the iron thus obtained is in the form of a fine powder, and oxidizes when exposed to atmospheric air. When the heat in this operation is raised to redness on the oxide, before hydrogen is applied, the metal agglutinates into a grey porous mass, which is not much affected by cold atmospheric air. It was until recently supposed that pure iron could be obtained by the

galvano-plastic process, described at p. 1382, and of which particular mention is made by Dr. Percy in his work on Iron and Steel. All experiments which have been made to obtain it are indicative of its being infusible when freed from foreign matter; the degree of heat at which it is fused increases with its degree of purity. In practice we have impure iron exclusively, and all our investigations are confined to alloys of iron.

Our Chemical Knowledge of Iron.—Iron undergoes no alteration either in oxygen or in dry air. But in moist air it becomes oxidized and covered with rust; the presence of carbonic anhydride facilitates this change. The oxidation takes place at the expense of the water, and the hydrogen liberated unites with the nitrogen of the air, forming ammonia, with which rust is always impregnated.

Iron decomposes water when at a red heat by liberating the hydrogen. At this temperature it also unites directly with the atmospheric oxygen; it then forms an oxide which has been called crust-oxide, because it forms the flakes or crust which are detached from the hot metal when hammered; this crust is also known as iron-scale or hammer-slag. When cold, iron is dissolved in acids with a setting free of hydrogen.

Iron forms, with the monatomic radicals, two series of compounds; into the former of these a single atom of this metal enters, which in this case is never saturated. To these compounds correspond others of the same order, which iron generates by uniting with the diatomic radicals. All the compounds of this order bear the name of minimum combinations, or ferrous compounds.

Besides these combinations, iron forms others, containing not a single atom of this metal, but the group Fe^2. This group is naturally hexatomic, since the two atoms of iron mutually exchange an atomicity or capacity of saturation. This is shown by the annexed figure, in which *a* and *b* represent two atoms of tetratomic iron, giving rise to the group $\overline{Fe}^2$, in which we find only six free attractive centres instead of eight. The group Fe^2 is therefore susceptible of either, with six monatomic radicals, or with three diatomic radicals. The compounds of this order are usually known by the name of maximum or ferric compounds.

The principal compounds of iron are the following;—

Minimum or ferrous compounds.		Maximum or ferric compounds.	
Protochloride of iron	$\overline{Fe}Cl^2$	Perchloride of iron	$\overline{Fe}^2Cl^6$
Protobromide	$\overline{Fe}Br^2$	Perbromide	$\overline{Fe}^2Br^6$
Protoiodide	$\overline{Fe}I^2$	Periodide	$\overline{Fe}^2I^6$
Protofluoride	$\overline{Fe}Fl^2$	Perfluoride	$\overline{Fe}^2Fl^6$
Hydride	$\overline{Fe}H^2$	Sesquioxide	$\overline{Fe}^2\overline{O}^3$
Protoxide	$\overline{Fe}\,\overline{O}$	Sesquisulphide	$\overline{Fe}^2S^3$
Protosulphide	$\overline{Fe}S$	Maximum hydrate of iron	$\left.\begin{matrix}\overline{Fe}^2\\H^6\end{matrix}\right\}\overline{O}^6$
Minimum salts	$\left.\begin{matrix}Fe\\(R')^2\end{matrix}\right\}\overline{O}^2$	Various maximum salts	$\left.\begin{matrix}\overline{Fe}^2\\(R')^6\end{matrix}\right\}\overline{O}^6$

R′ is a monatomic acid radical.

In virtue of the property which the diatomic radicals have of accumulating in the molecules, sulphur and oxygen form with iron, besides the preceding compounds;—

Magnetic oxide of iron	$\overline{Fe}^3\overline{O}^4$
Ferric anhydride	$\overline{Fe}\,\overline{O}^3$
Bisulphide of iron	$\overline{Fe}S^2$
Magnetic pyrite	$\overline{Fe}^7S^8$

Ferrous Compounds of Iron.—Protochloride of Iron, $\overline{Fe}''Cl^2$.—Anhydrous protochloride of iron is obtained by causing a dry current of hydrochloric acid gas to pass through a porcelain tube, Fig. 4221, containing pure iron, at a red heat.

4221.

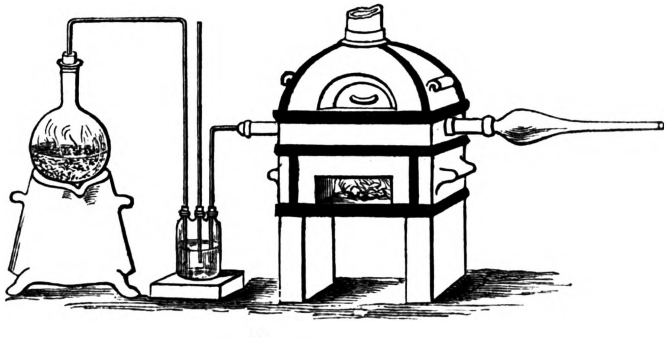

$$\overline{Fe} + 2\left(\begin{matrix}H\\Cl\end{matrix}\right\}) = \left.\begin{matrix}H\\H\end{matrix}\right\} + \overline{Fe}''Cl^2$$

Iron. — Hydrochloric acid. — Hydrogen. — Protochloride of iron.

This salt is condensed in bright scales upon the walls of the cold portion of the tube. Ferrous chloride is volatile and soluble in water and alcohol. Its aqueous solution is of a green

colour. When evaporated, it leaves a deposit of green hydrated crystals, the formula of which is $Fe Cl^2 + 4$ aq. Exposed to the air, this solution absorbs oxygen and loses its transparency; its colour then becomes yellowish, and in this case a chloroxide $Fe^2 Cl^4 O$ is formed.

$$\underset{\text{Protochloride of iron.}}{4\,Fe''\,Cl^2} + \underset{\text{Oxygen.}}{\left.\begin{matrix}O\\O\end{matrix}\right\}} = \underset{\text{Chloroxide of iron.}}{2\,Fe^2\,Cl^4\,O}$$

If an acid and an oxidizing body be made to act simultaneously upon protochloride of iron, a double maximum salt is formed.

$$\underset{\text{Protochloride of iron.}}{4\,Fe\,Cl^2} + \underset{\text{Oxygen.}}{\left.\begin{matrix}O\\O\end{matrix}\right\}} + \underset{\text{Nitric acid.}}{4\left(\left.\begin{matrix}Az\,O^2\\H\end{matrix}\right\}O\right)} = \underset{\text{Tetrachloro-diazotate of iron.}}{2\left(Fe^{iv2}\left\{\begin{matrix}O\,Az\,O^2\\O\,Az\,O^2\\Cl^4\end{matrix}\right.\right)} + \underset{\text{Water.}}{2\left(\left.\begin{matrix}H\\H\end{matrix}\right\}O\right)}$$

Chlorine combines with ferrous chloride, and transforms it into ferric chloride.

$$\underset{\text{Ferrous chloride.}}{2\,Fe''\,Cl^2} + \underset{\text{Chlorine.}}{\left.\begin{matrix}Cl\\Cl\end{matrix}\right\}} = \underset{\text{Ferric chloride.}}{Fe^2\,Cl^6}$$

Protobromide of Iron, $Fe\,Br^2$.—The properties and mode of preparation of this substance being the same as those of the preceding body, it is useless to describe them.

Protoiodide of Iron, $Fe\,I^2$.—Hydrated protoiodide of iron is prepared for medical use by triturating in water 56 parts of iron with 254 parts of iodine; it is better to put a greater quantity of iron than 56 to give an excess of the metal. When the liquid has lost all smell of iodine, it is filtered and rapidly evaporated. The concentrated liquid gives up as it cools green crystals of iodide of iron. Contact with the air must be avoided as much as possible during the operation; for ferrous iodide changes quickly when exposed to the air by absorbing oxygen.

Protoxide of Iron, $Fe\,O$.—If equal volumes of carbonic anhydride and oxide of carbon are made to pass upon sesquioxide of iron at a red heat, the iron is brought into the state of a protoxide. This substance always contains, however, a small quantity of the sesquioxide. A hydrate of iron may be obtained by precipitating a ferrous salt by potash.

$$\underset{\text{Protochloride of iron.}}{Fe''\,Cl^2} + \underset{\text{Potash.}}{2\,K\,O\,H} = \underset{\text{Chloride of potassium.}}{2\,K\,Cl} + \underset{\text{Ferrous hydrate.}}{Fe''\left\{\begin{matrix}O\,H\\O\,H\end{matrix}\right.}$$

This hydrate is so liable to change, that it is impossible to dishydrate it without destroying it. Ferrous hydrate is green at the moment of its precipitation, but it quickly turns yellow on exposure to the air, by transforming itself into magnetic oxide.

$$\underset{\text{Ferrous hydrate.}}{6\left(Fe''\left\{\begin{matrix}O\,H\\O\,H\end{matrix}\right.\right)} + \underset{\text{Oxygen.}}{\left.\begin{matrix}O\\O\end{matrix}\right\}} = \underset{\text{Water.}}{6\left(\left.\begin{matrix}H\\H\end{matrix}\right\}O\right)} + \underset{\text{Magnetic oxide.}}{2\,Fe^3\,O^4}$$

Hydrate of iron is a true base susceptible of exchanging its oxhydride for the halogenic residue of the acids.

Protosulphide of Iron, $Fe\,S$.—This substance may be prepared either in the wet way, by precipitating a ferrous salt with sulphide of ammonium, or in the dry way, by heating a compound, made in atomic proportion, of sulphur and iron.

1. $$\underset{\text{Protochloride of iron.}}{Fe''\left\{\begin{matrix}Cl\\Cl\end{matrix}\right.} + \underset{\text{Sulphide of ammonium.}}{\left.\begin{matrix}Az\,H^4\\Az\,H^4\end{matrix}\right\}S} = \underset{\text{Chloride of ammonium.}}{2\left(\left.\begin{matrix}Az\,H^4\\Cl\end{matrix}\right\}\right)} + \underset{\text{Protosulphide of iron.}}{Fe''\,S}$$

2. $$\underset{\text{Iron.}}{2\,Fe} + \underset{\text{Sulphur.}}{\left.\begin{matrix}S\\S\end{matrix}\right\}} = \underset{\text{Protosulphide of iron.}}{2\,Fe''\,S}$$

Sulphide prepared by the wet way is pulverulent, black, and absorbs oxygen with extreme readiness in passing into the state of a sulphate. Sulphide obtained by the dry way is hard, brittle, and possesses a metallic lustre.

$$\underset{\text{Protosulphide of iron.}}{Fe\,S} + \underset{\text{Sulphuric acid.}}{\left.\begin{matrix}S\,O^{2''}\\H^2\end{matrix}\right\}O^2} = \underset{\text{Ferrous sulphate.}}{\left.\begin{matrix}S\,O^{2''}\\Fe''\end{matrix}\right\}O^2} + \underset{\text{Hydrosulphuric acid.}}{\left.\begin{matrix}H\\H\end{matrix}\right\}S}$$

Steel dust and flowers of sulphur mixed and moistened react upon each other after a certain time; the reaction is accompanied by a great emission of heat. If the compound be buried a little distance beneath the surface of the earth in sufficient quantity, the aqueous vapours which become disengaged throw the earth to a considerable distance, and sometimes the combination is accompanied with an emission of light.

Ferrous Sulphate, $\left.\begin{matrix}S\,O^{2''}\\Fe''\end{matrix}\right\}O^2 + 7$ aq.—In laboratories, this salt is prepared by dissolving iron in diluted sulphuric acid, concentrating the liquid by boiling, and then leaving it to cool, that the

salt may be deposited in crystals. For manufacturing purposes, this substance is prepared by roasting natural pyrites (bisulphide of iron).

$$\underset{\text{Pyrite.}}{Fe\,S^2} + 3\left(\begin{matrix}\Theta\\\Theta\end{matrix}\right) = \underset{\text{Sulphurous anhydride.}}{S\,O^2} + \underset{\text{Ferrous sulphate.}}{S\,Fe\,\Theta''}$$

A washing is necessary after the roasting, and the liquid is left to clear. It is then decanted, and after sufficient evaporation, it is left to crystallize.

Certain pyrites absorb oxygen by merely being exposed to the air, without being heated. Sulphate of iron thus prepared contains many impurities, amongst others copper. As this latter metal might be injurious in certain cases, it is eliminated by placing for a short time strips of iron in the solution of sulphate; the iron substitutes itself for the copper, and the latter is precipitated.

Sulphate of iron is known in commerce under the name of green vitriol or green copperas.

Ferrous sulphate crystallizes in oblique rhomboidal prisms, of a greenish colour, and containing seven molecules of water. Its taste is astringent. One part of this salt requires to dissolve it 1·42 of water at 15° C. and 0·33 of boiling water. It is insoluble in alcohol, but this liquid deprives it of six molecules of water. It also loses $\frac{6}{7}$ of its water of crystallization when heated to 100° C., but it does not become perfectly anhydrous till 300° C. are reached. When calcined, ferrous sulphate is decomposed into sulphurous anhydride, sesquioxide of iron, and sulphuric anhydride. It may be remarked here that the preparation of the sulphuric acid of Saxony is founded upon this reaction.

$$\underset{\text{Ferrous sulphate.}}{2\left(\begin{matrix}S\,\Theta^{2''}\\Fe''\end{matrix}\right)\Theta^2} = \underset{\text{Sulphurous anhydride.}}{S\,\Theta^2} + \underset{\text{Sulphuric anhydride.}}{S\,\Theta^3} + \underset{\text{Sesquioxide of iron.}}{Fe^2\,\Theta^3}$$

When exposed to the air, the crystals or the solution of ferrous sulphate absorb oxygen, and give a yellowish ferric subsulphate which may be destroyed by boiling it with iron. The minimum sulphate of iron, in an aqueous solution, will preserve its state only if the water in which it has been dissolved has been previously deprived of air by boiling, and the solution carefully protected from contact with the air.

Sulphate of iron crystallizes with seven molecules of water, and is isomorphous with the sulphates of the magnesian series.

Ferric or Maximum Compounds of Iron.—Perchloride of Iron, $Fe^2\,Cl^6$.—Anhydrous perchloride of iron is obtained by causing an excess of chlorine to pass over iron heated to a red heat. The apparatus used for this purpose is the same as that employed in the preparation of ferrous chloride. This substance may also be prepared by distilling at a red heat in a stone retort hydrated perchloride prepared by the solution of iron in aqua regis. In the latter case, however, a portion of the perchloride is decomposed by the water into hydrochloric acid and sesquioxide of iron.

$$\underset{\text{Perchloride of iron.}}{Fe^2\,Cl^6} + 3\left(\begin{matrix}H\\H\end{matrix}\right)\Theta = 6\left(\begin{matrix}H\\Cl\end{matrix}\right) + \underset{\text{Sesquioxide of iron.}}{Fe^2\,\Theta^3}$$
Water. Hydrochloric acid.

Hydrated perchloride of iron may also be procured by dissolving maximum hydrate of iron in hydrochloric acid.

$$\underset{\text{Ferric hydrate.}}{\left.\begin{matrix}Fe^{2vi}\\H^6\end{matrix}\right\}\Theta^6} + \underset{\text{Hydrochloric acid.}}{6\left(\begin{matrix}H\\Cl\end{matrix}\right)} = \underset{\text{Ferric chloride.}}{Fe^2\,Cl^6} + \underset{\text{Water.}}{6\left(\begin{matrix}H\\H\end{matrix}\right)\Theta}$$

By evaporating the liquid, and leaving it to cool, we obtain rhomboëdrical forms of a beautiful yellow colour, answering to the formula $Fe^2\,Cl^6 + 6\,aq$. Ferric chloride is of the colour of cantharides' wings. It is volatile; water, alcohol, and ether dissolve it; water causes it to pass into the state of a hydrated chloride. When subjected to the action of aqueous vapour in a heated tube, this substance gives crystallized sesquioxide of iron, identical with the *specular iron* found in a natural state.

Ferric chloride in an aqueous solution is employed in medicine as a hemostatic, on account of the property it possesses of coagulating albumen; it is taken internally as a remedy for hemorrhage.

Perbromide and Periodide of Iron.—These substances may be obtained by combining directly iron with bromine or iodine in excess. They are of no practical use.

Sesquioxide of Iron, $Fe^2\,\Theta^3$.—In commerce, this substance (colcothar) is prepared by calcining ferrous sulphate; in laboratories it is preferably prepared by heating ferric hydrate. It is found in nature crystallized; and is then isomorphous with aluminum.

Sesquioxide of iron is a basic anhydride. Yet the weak acids do not dissolve it; strong and boiling acids alone attack it by transforming it into ferric salts.

Ferric Hydrate, $\left.\begin{matrix}Fe^{2vi}\\H^6\end{matrix}\right\}\Theta$.—To the sesquioxide of iron corresponds a basic hydrate, ferric hydrate. This substance is usually prepared by the decomposition of a ferric compound soluble by means of ammonia. The precipitate which is formed must be collected on a filter and well washed.

$$\underset{\text{Perchloride of iron.}}{Fe^{2vi}\left\{\begin{matrix}Cl^3\\Cl^3\end{matrix}\right.} + \underset{\text{Ammonic hydrate.}}{6\left(\begin{matrix}Az\,H^4\\H\end{matrix}\right)\Theta} = \underset{\text{Ammonic chloride.}}{6\left(\begin{matrix}Az\,H^4\\Cl\end{matrix}\right)} + \underset{\text{Ferric hydrate.}}{Fe^{2vi}\left\{\begin{matrix}(\Theta\,H)^3\\(\Theta\,H)^3\end{matrix}\right.}$$

Ferric hydrate is reduced by hydrogen still more easily than colcothar. The weakest acids dissolve it by giving rise to maximum salts. When it is calcined, it loses its water, and becomes anhydrous. At the moment when this transformation is effected, the mass becomes incandescent. When put in suspension in a concentrated alkaline solution, through which a current of chlorine is directed, ferric hydrate passes rapidly into the state of an alkaline ferrate. According to M. Péan de Saint-Gilles, if ferric hydrate is boiled for seven or eight hours, it loses much water, and is converted into a condensed anhydride, whose formula is

$$\left.\begin{matrix} Fe^{2vi}\{ \overline{\overline{O}\,H,\ O,\ O} \\ Fe^{2vi}\{ \overline{\overline{O},\ O,\ O\,H} \end{matrix}\right\} = Fe^4\,H^2\,O^7.$$

This new compound does not offer the phenomenon of incandescence when it is calcined, and it dissolves with as much difficulty as the anhydrous sesquioxide. Graham succeeded in obtaining a soluble variety of ferric hydrate by subjecting ferric acetate to dialysis. This soluble hydrate appears to be a product of condensation.

Maximum Salts of Iron.—These salts are obtained by dissolving ferric hydrate in various acids. They may also be prepared by dissolving ferrous salts in water, and peroxiding them by a current of chlorine or by nitric acid. In the latter case, if it is required to obtain a neuter salt, there must be added to the liquid a certain quantity of the acid whose elements the salt contains. With an equal quantity of metal, the maximum salts contain, indeed, a greater number of molecules of the electro-negative group than the minimum salts, since in these latter the atom of iron is only *biavalent*, whilst in the former the double atom Fe^2 is *hexavalent*.

The following equation shows clearly this necessity of adding an acid to the ferrous salt which it is required to peroxide.

$$2\left(\begin{matrix} S\,O^{2''} \\ Fe'' \end{matrix}\right\} O^2\Big) + \left.\begin{matrix} S\,O^{2''} \\ H^2 \end{matrix}\right\} O^2 + O = \left.\begin{matrix} H \\ H \end{matrix}\right\} O + \left.\begin{matrix} Fe^{2vi} \\ (S\,O^{2''})^3 \end{matrix}\right\} O^6$$

Ferrous sulphate. — Sulphuric acid. — Oxygen. — Water. — Neuter ferric sulphate.

When a reducing agent is made to act upon the ferric salts, the latter are transformed into ferrous salts, and at the same time a molecule of acid is liberated.

$$\left.\begin{matrix} Fe^{2vi} \\ (S\,O^{2''})^3 \end{matrix}\right\} O^6 + \left.\begin{matrix} H \\ H \end{matrix}\right\} = 2\left(\begin{matrix} S\,O^{2''} \\ Fe'' \end{matrix}\right\} O^2\Big) + \left.\begin{matrix} S\,O^{2''} \\ H^2 \end{matrix}\right\} O^2$$

Ferric sulphate. — Hydrogen. — Ferrous sulphate. — Sulphuric acid.

The reducing agents capable of producing this result are, among others, hydrosulphuric acid, hydrogen, and steel-dust. In the case of the hydrosulphuric acid, the reduction is effected cold, sulphur is deposited, and the sulphuric acid is liberated; in that of the steel-dust, on the contrary, the solution of the salt required to be reduced must be boiled with that substance. Instead of free sulphuric acid, only ferrous sulphate is then formed.

Magnetic Oxide of Iron, $Fe^3\,O^4$.—This oxide is found in nature, where it forms an excellent iron ore. Natural loadstones are composed of it. It may be produced artificially by causing aqueous vapour (steam) to pass over iron heated to a red heat.

$$3\,Fe + 4\left(\begin{matrix} H \\ H \end{matrix}\right\} O\Big) = Fe^3\,O^4 + 4\left(\begin{matrix} H \\ H \end{matrix}\right\}\Big)$$

Iron. — Water. — Magnetic oxide of iron. — Hydrogen.

It may also be prepared by precipitating, by means of ammonia, a mixture of protochloride and perchloride of iron containing quantities of each of these substances corresponding to the weight of their molecule. In this case it is important to pour the mixture drop by drop into a great excess of ammonia. If, on the contrary, the ammonia were poured into the mixture, the alkali not being everywhere in excess at the same time, ferric hydrate would first be precipitated, then ferrous hydrate, but no magnetic oxide. Magnetic oxide must be considered as a minimum salt of iron generated by the second anhydride of the maximum hydrate of the same metal acting as an acid.

$$\left.\begin{matrix} Fe^2{}_{vi} \\ H^6 \end{matrix}\right\} O^6 - 2\,H^2\,O = \left.\begin{matrix} Fe^2 \\ H^2 \end{matrix}\right\} O^4 - 2\,H + Fe'' = \left.\begin{matrix} Fe^{2vi} \\ Fe'' \end{matrix}\right\} O^4$$

Ferric hydrate. — Water. — 2nd anhydride of the maximum hydrate. — Hydrogen. — Iron. — Magnetic oxide of iron.

There exist, indeed, aluminates of iron isomorphous with it, which leave no doubt as to its true constitution.

Ferric anhydride, $F\,O^3$.—Ferric anhydride is not known; but when we direct a current of chlorine through a concentrated alkaline solution holding ferric hydrate in suspension, there is formed a red salt which is none other than the ferrate of potash $Fe\,K^2\,O^4$, corresponding to the manganate of potash $Mn\,K^2\,O^4$.

Bisulphide of iron, $Fe\,S^2$ (pyrites).—The pyrite represents a saturated minimum compound of iron. It is the only one known. It exists in nature, crystallized sometimes in cubes, sometimes in prisms. The cubic pyrite is the most common; it is hard enough to cut glass and to emit

sparks when struck with steel. Its density varies from 4·083 to 5·031 according to Dana, and from 5·0 to 5·2 according to Rammelsberg. It has a metallic appearance; acids do not change it; but it is readily affected by aqua regis. Sometimes this pyrite becomes oxidized when exposed to the air, sometimes it is inoxidable. The prismatic pyrite always becomes oxidated on exposure. When heated with carbon, bisulphide of iron gives sulphuret of carbon and protosulphuret of iron.

Magnetic pyrites, $Fe^7 S^8$.—This substance is found in nature crystallized into regular hexahedral prisms. It acts upon the magnet. Its composition is not very constant; it appears that these pyrites result from the combination of the other sulphurets among each other without our knowing exactly what the sulphurets are that are thus combined. They may be obtained artificially by heating a piece of iron to a white heat and plunging it into a crucible filled with molten sulphur: the pyrites collect at the bottom of the crucible.

Titanitic Iron.—There exists in a natural state a substance called titanitic iron, containing iron, titanium, and oxygen. This substance is isomorphous with the sesquioxide of natural iron. To explain this isomorphism, we are obliged to consider titanitic iron as a compound of sesquioxide of iron $Fe^2 O^3$ and an oxide $Ti\,Fe\,O^3$, which would be none other than the preceding oxide, in which an atom of titanium was substituted for an atom of iron. If this interpretation is the true one, the substitution of an atom of tetratomic titanium for an atom of iron, and the isomorphism of this product of substitution with the ordinary oxide of iron, furnish another proof of the *tetratomicity* of iron.

Character of the Salts of Iron.—The minimum salts are generally green, and the maximum salts yellowish, they are distinguished from each other by the following characteristics;—

1. Ferrocyanide of potassium precipitates the minimum salts of iron blue, and the maximum salts white.

2. Sesquiferrocyanate of potassa precipitates the minimum salts of iron blue, and does not precipitate the maximum salts.

3. The alkalies give with the minimum salts a green precipitate which turns yellow on exposure to the air, and with the maximum salts a yellow precipitate which does not change its colour.

4. Hydrosulphuric acid does not act upon the minimum salts; it reduces the maximum salts, with a deposit of sulphur.

5. The alkaline sulphurets give with both classes of salts a black precipitate very soluble in diluted acids.

Iron deposited galvanically.—The difficulty of obtaining chemically pure iron, for the purpose of studying its properties, led to the attempts to precipitate it from its solutions by galvanic action, which is easily done by employing a weak battery and a solution of sulphate of iron, mixed with sulphate of magnesia; having, at the same time, sufficient carbonate of magnesia in the solution to keep it constantly neutral in proportion as the iron is reduced. Thus obtained, the iron presents itself as a fine-grained deposit, in which no trace of crystallization can be seen under the microscope. Its colour is a soft light grey, and its hardness is so surprisingly great that it can only be scratched with a file; it being at the same time so brittle that a piece $\frac{1}{8}$ of an inch thick can easily be broken between the fingers. These properties, however, at once change upon heating the iron; it then becomes very much softer, and as malleable as it was before brittle, and can be cut with the scissors with the greatest ease, as well as bent to and fro numerous times without breaking. Iron so deposited was supposed to be pure iron, but the researches of the late Professor Graham on the occlusion of gases in metals caused Professor Jacobi to examine it more carefully, when he found that it in reality contained a considerable amount of hydrogen gas. Still more recently this iron has been investigated by R. Lenz, who finds that all such electro-deposited iron contains very much hydrogen, with more or less carbonic acid, carbonic oxide, nitrogen, and water, and that it may have occluded in its substance as much even as 185 times its own bulk of these gases, principally hydrogen, which are evolved again on the application of heat. When heated out of contact with the air or oxidizing matters, this iron changes colour, and becomes of a colour exactly resembling platinum; and if now placed in water, a portion of the iron is oxidized at the expense of the oxygen in the water, whilst the hydrogen set free is at once absorbed, or again occluded by the rest of the iron.

Ores.—Native Iron.—Iron occurs in a native state; but the quantity found is so small as to be of no practical use. Native iron is also found in meteoric stones, which consist chiefly of iron and nickel; but these substances are of no interest to us. Iron combined with oxygen, carbon, carbonic acid, and some other substances, is the form which arrests our attention.

So great is the affinity of iron for other substances, that its ores seldom occur in a pure condition; and as the foreign matters form the quality of the metal smelted from the ores, it is evident that each peculiarity of the ore is imparted to the iron manufactured from it. Those minerals which contain at least 20 per cent. of metal are considered ores; if they contain less, they are denominated fluxes. The richest and purest ores are found in the primitive rocks. But as some ores, of more recent origin, form a metal peculiarly qualified for certain purposes, they are not less valuable than the former. Those minerals which constitute useful iron ores, we shall here proceed to notice.

Magnetic Iron Ore; Loadstone, or Magnetic Ore.—Protosesquioxide of iron. This occurs crystallized, and also granular, earthy, and compact. Its sp. gr. is 5·09. It is of a black colour, metallic lustre, opaque, hard, brittle, and forms always a black powder, when rubbed or pulverized. It is attracted by the magnet, and is fusible in a very strong heat. When pure, it contains from 69 to 72 per cent. of metal. Some of these ores are hydrates, and contain 7 per cent. of water; and in this case, the metallic contents are diminished in ratio. It occurs in the west of England and in Yorkshire. Very extensive beds and veins of it are found in the counties of Warren, Essex, and Clinton, in the State of New York, also at Belmont, Canada, in Norway, and in Lapland. Imbedded in granite, syenite, and syenitic rocks, it occurs in Orange, Putnam, Saratoga, Herkimer, and other

counties in New York; in New Jersey, Pennsylvania, Virginia, Vermont, New Hampshire, Connecticut, Arkansas, Missouri, and we may add, in most States of the Union. No kind of ore is more generally diffused in the United States, either in larger quantities or better quality. The Swedish iron, so justly celebrated for its good qualities, is chiefly manufactured from magnetic ore.

The purest kinds of this ore furnish, by good management of the furnace, about 70 per cent. of crude iron; on an average we may calculate on 50 to 55 per cent. of metal. A specimen of this ore from Lake Champlain, furnished by analysis,

Protoxide of iron	17·9
Peroxide „	81·8
Alumina and silica	0·3

and a specimen from South Carolina 69·5 protoxide and peroxide, 1·5 alumina, 20·0 silica. The first variety may be considered a very pure, and the latter an impure, ore of it.

To this class of iron ores we may also range those magnetic ores which contain titanic acid. This substance is frequently found in the magnetic ores of New York, amounting from 1 to 10 per cent. of them, and in single specimens even more. A specimen of ore from Lake Champlain furnished in 100 parts,

Peroxide of iron	70·00
Protoxide „	12·31
Phosphoric and titanic acids	6·19
Silica	·36
Manganese	·33

This ore is also found to contain, frequently, iron pyrites, galena, blende, arseniuret, copper pyrites, heavy spar, and other more or less injurious substances.

Red Oxide of Iron; Peroxide of Iron; Specular Ore; Red Hematite; Micaceous Ore.—This iron ore occurs in nearly all geological formations, and the crystallized variety chiefly in primitive and metamorphic rock. The red hematites of Lancashire and Cumberland are perhaps the richest iron ores in England; the deposits of Furness alone were estimated in Feb. 1872 as producing annually 800,000 tons of ore, the richest deposits having generally been discovered at or near the junction of the mountain limestone and the slate (silurian) rocks. About three-fifths of the entire quantity raised in these counties is of a hard rocky nature, containing about 60 per cent. of metallic iron, of nearly a uniform quality, except that in some of the mines on the eastern side of the northern series it is slightly mixed with quartz, and rather more silicious in character. In the north Lancashire district is a hard, red, fine ore, containing about 55 per cent. of metallic iron, occasionally mixed with considerable quantities of manganese. Red hematite has been discovered to exist in great abundance in the United States; it is also found massive, and as red ochre, combined with clay, shells, and other substances. Reddle is an impure kind of it. It is easily distinguished from other ores, by affording a red powder when rubbed upon a white substance; but as some of the varieties are very hard, and others feel unctuous, like graphite, a hard substance —white porcelain—is required to bring out the colour. The crystallized varieties are generally pure and very hard, and may furnish 70 per cent. of metal; its sp. gr. is 4·5 to 5·3; the compact ore is 4·2. The crystals are of great lustre, brown, often black; the massive varieties are some-

Specimens of Lancashire and Cumberland Ores analysed by J. T. Smith, contained;—

	1.	2.	3.	4.	5.
Sesquioxide of iron	85·93	91·87	79·14	92·45	83·05
Protoxide of manganese	0·32	0·30	0·66	0·04	0·08
Silica (in solution)	0·11	0·10	0·16	0·09	0·07
Alumina „	0·14	0·30	0·06	0·05	0·45
Lime „	0·29	0·28	0·22	0·32	3·54
Magnesia „	trace	trace	trace	trace	0·72
Carbonic acid	..	..	..	..	2·41
Phosphoric „	0·02	..	trace	trace	trace
Sulphuric „	..	..	..	..	0·04
Water	1·02	0·65	2·31	0·46	3·50
Ignited insoluble residue	12·53	6·34	17·06	6·87	6·70
	100·36	99·84	99·61	100·28	100·56
Ignited insoluble residue;—					
Silica	11·63	5·80	15·78	6·77	5·87
Alumina	0·44	0·36	1·03	trace	0·62
Sesquioxide of iron	..	..	..	..	..
Lime	0·04	trace	0·14	trace	0·04
Magnesia	trace	trace	trace	trace	trace
	12·11	6·16	16·95	6·77	6·53
Iron, total amount	60·15	64·31	55·40	64·71	58·13

times earthy and red, or brown-red. In thin laminæ the ore is translucent, and of a bright red colour. Some kinds of it are attracted by the magnet, which may be caused by particles of magnetic ore. With this kind of ore are also classed the different argillaceous ores, which frequently are so poor in metal as to contain only 5 or 10 per cent., but are nevertheless of a perfectly red, often brown-red colour.

All this kind of ore furnishes a superior quality of iron, which is distinguished for tenacity and softness.

A specimen of brown, or red-brown, fossiliferous iron ore, which is smelted in Pennsylvania, and Wayne county, New York, contained,

Peroxide of iron	51·50	Silica	6·00
Carb. of lime (shells) ..	24·50	Alumina	7·50
Carb. of magnesia	7·75	Moisture	2·75

On an average, these ores furnish from 36 to 50 per cent. of iron. Those which furnish less than 30 per cent. of metal are generally not smelted. Some of them, particularly those in the Southern States of America, are the result of the decomposition of pyrites, and the ore-beds show iron pyrites below the water levels. These ores also contain titanic acid, as is seen in some of the Pennsylvania ores; they are then very refractory. Alumina is the most general companion of these ores, and may be considered one of the causes of the good quality of the iron which they furnish.

Brown Hematite; hydrated sesquioxide of iron; brown and yellow ore; bog ore; pipe ore; prismatic ore. This is a very abundant iron ore, and a source of cheap metal; it is mined extensively at the Forest of Dean, Gloucestershire, in Cornwall, Devonshire, France, and Belgium; it is also mined in Wales, Wiltshire, Oxfordshire, and forms the bulk of ore in the United States. Hematite is essentially a hydrated peroxide, with definite quantities of water, which vary from 9 to 13 per cent. In its purest form it contains from 50 to 62 per cent. of metal. The varieties of this ore are very numerous; it occurs in all shades of colour, from black to a faint yellow. The brown or black fibrous ore is of the best quality, but the compact kinds are more or less adulterated with silica and alumina, generally with the first. Bog ore often contains from $\frac{1}{2}$ to $\frac{3}{4}$ per cent. of phosphorus. Yellow ores are mingled with clay, lime, magnesia, and other substances; the brown ore often contains large quantities of manganese, from which no ore of this kind is entirely free. The powder of all the varieties of this ore is yellow.

All these ores are of recent origin. They are the result of the decomposition of pyrites, carbonates, arseniurets, and other compounds of iron, and often assume the forms of vegetable or animal remains.

The best kinds of this ore from the coal formations, which are generally the result of the decomposition of the argillaceous carbonates, contain on an average not more than 30 per cent. of metal. They generally are mixed with a variety of foreign substances, as the following specimen from Westmoreland county, Pennsylvania, shows;—

Peroxide of iron	77·00	Organic matter	1·22
Oxide of manganese ..	4·50	Water	12·00
Alumina	·50	Silica	4·00

In the Forest of Dean large quantities of brown hematites have been mined and smelted in the local works; the iron is of a red-short nature, but especially celebrated for the manufacture of tin plates. These ores are wrought from deposits in Lancashire and Cumberland, Northumberland, and Durham; the carboniferous limestones of Derbyshire, Somersetshire, and South Wales contain deposits which are also wrought; but it is from the Dean Forest, Lancashire, and Cumberland mines that the chief supply is at present obtained.

By analysis it has been found that the average composition of the calcareous ores of Dean Forest is nearly as follows;—

		2.
Peroxide of iron	54	67·0
Carbonate of lime	35	24·3
Clay	7	6·5
Moisture	4	2·2
	100	100
Metallic iron	37·5 per cent.	46·5 per cent.

The first result will probably seem a low yield to persons who use calcareous ores in mixture with others, but from numerous assays, as well as experimental trials in the blast furnace, it fairly represents the produce of the mass of these ores. When the specimens have been carefully selected the produce is higher, as in the second example from the same locality.

Spathic or Sparry Ore, crystallized carbonate of iron. This is protoxide of iron in combination with carbonic acid. This ore most frequently contains also carbonate of manganese, and carbonate of magnesia. When perfectly pure, it ought to consist of 62·1 protoxide of iron, and 37·9 carbonic acid, which is equal to 48·3 parts of metal. The colour of this ore is white, yellowish, and often of a reddish hue, or flesh-coloured. There are also fine brown varieties, which may be considered partly oxides; and often the whole mass is thoroughly oxidized, and still retains its lustre and form of crystals. Its sp. gr. is 3·7 to 3·8; its lustre vitreous, and the streak or powder white. This ore is in some specimens translucent, particularly in thin scales. It is hard and brittle.

It is a very interesting species of iron ore; when pure it forms good steel with the greatest facility; in fact, it is converted into steel with less labour than into fibrous iron. German steel is exclusively manufactured of this ore, from the pure varieties of Styria and western Germany; for

these reasons it is called steel ore. Notwithstanding this ore bears a high reputation as an element for the manufacture of steel, yet cheap steel can never be made from it, nor good steel, unless it is treated with particular care. But it is adapted to produce the strongest and most fibrous kinds of wrought iron.

It is very abundant in Europe, but not in the United States. Sparry ore is found in Vermont; and that from Plymouth, U.S., furnished by analysis—carb. of iron 74·28, carb. of magnesia 16·40, carb. of manganese 6·56 and oxide of iron ·3. It also occurs to some extent at Roxbury. This ore is most generally impure; it is usually mingled with pyrites and sulphurets of various descriptions, which of course render the iron manufactured of it of less value than other and purer kinds of iron.

Argillaceous Ore, compact carbonate of iron, occurs chiefly in the coal formations, but its presence is not confined to these localities. When oxidized, it forms hydrated oxides, brown or yellow hematites; it is from these that the iron of Pennsylvania is chiefly manufactured. In its original form it is found in round or flattened lumps, spheroids, imbedded in clay, clay-slate, sandstone, shale, or limestone, and arranged in regular veins. These balls range from globules of the size of peas to masses of two and more tons in weight; but as there are often large quantities of dead slate between the balls, the ore is expensive, however soft the shale may be. When the spheroids oxidize, the oxide assumes the form of shells ranged in circular layers, like an onion. It appears that the oxidation progresses either by periods, or, that at one time of the process more of the impurities are removed than at others, which causes a different density in the hydrated oxide, and a consequent formation of strata. This ore does not often contain more than 33 per cent. of metal. Its composition is that of the sparry ore, but it contains always some alumina, and some silica, and lime. The ore, when dried or roasted, emits the peculiar argillaceous odour incident to clay and clay ores. Its fracture is always close-grained. Sp. gr. 3· to 3·5.

All the great coal formations hitherto discovered contain argillaceous and carbonaceous iron ores in greater or less abundance. The Staffordshire, South Wales, North Wales, Derbyshire, Shropshire, and Scotch coal-fields, contain valuable seams of argillaceous iron ore. In the Durham, Lancashire, Somersetshire, and other minor coal-fields, the argillaceous ores exist in smaller quantities, and produce when smelted crude iron of an inferior quality.

The South Wales coal-field stands pre-eminent for the number and richness of its seams of argillaceous iron ores. The aggregate thickness of the seams measures 21 ft. The average percentage of metal in the ores exceeds 32 per cent. We subjoin the analyses of the ores from a number of seams wrought by the Dowlais Iron Company, from which their blast furnaces at Dowlais are chiefly supplied.

ANALYSES OF THE PRINCIPAL SEAMS OF ARGILLACEOUS IRON ORE IN THE SOUTH WALES COAL-FIELD.

	1.	2.	3.	4.	5.	6.	7.
Carbonate of iron	74·5	86·	77·1	62·	42·7	59·5	68·2
Silica	14·5	8·3	15·9	27·5	42·7	36·9	21·6
Alumina	8·3	·2	3·8	7·8	7·5	1·9	5·4
Carbonaceous matter	..	4·2	1·8	2·1	2·8	..	3·8
Lime	·8	..	·4	..	·1	..	..
Moisture and loss	·6	1·3	1·	·6	1·4	1·7	1·
Phosphoric acid	trace	..	..	..	2·8	..	..
Manganese	1·3	..	..	..	..	..	..
	100·	100·	100·	100·	100·	100·	100·
Percentage of metallic iron ..	35·9	41·46	37·2	29·5	20·6	28·7	32·9

These analyses, taken from the centre of the iron manufacture in this district, may be considered as fairly representing the mean composition of the Welsh argillaceous ores, since the variation at other workings, eastward and westward, is inconsiderable.

The richness of the respective seams in this basin is influenced by the distance between them. Thus, where two or more seams of iron ore exist with only a thin parting, their mean percentage will be found higher than that of seams having a greater thickness of ground interposed. The general character of the associated earths is influenced by the composition of the matrix, and also, but to a minor degree, by the adjacent seams of rock, shale, or clod. Seams of argillaceous ore, having either a roof or bedding of silicious rock, invariably contain a large percentage of silica. The lowest seams of ore, as they approach the mountain limestone, are found to contain a notable percentage of lime, a substance almost entirely wanting in the richer seams of the upper series.

On analysing specimens from 68 seams, the produce of which was used in the Dowlais furnaces, including the whole of the argillaceous ores of the north outcrop, it was found that 47, or more than two-thirds of the number, yielded 30 per cent. and upwards.

The Staffordshire coal-field contains numerous seams of argillaceous iron ores, from which the blast furnaces of the district derive their principal supply. In richness they are slightly inferior to the average of the Welsh ores. but they are equal to them in the quality of the resulting iron.

The analysis of a very rich specimen from this field, obtained near Dudley, gave;—

Carbonate of iron	78·3
,, lime	5·2
,, magnesia	4·7
,, manganese	1·7
Alumina	1·8
Silica	5·6
Phosphoric acid	·2
Carbonaceous matter and loss	2·5
	100·

Metallic iron 37·7 per cent.

The North Wales coal-field contains seams of argillaceous ore, but the average yield of metallic iron does not on the raw ore exceed 25 per cent.

The Derbyshire coal-field supplies a considerable quantity of these ores, but the product is generally inferior to that of the Welsh ores. According to M. Bunsen, the composition after calcination of those smelted in the Alfreton furnaces was as follows;—

Peroxide of iron	60·242
Silica	25·775
Alumina	6·583
Lime	3·510
Magnesia	3·188
Potash	·743
Manganese	traces
	100·

Metallic iron 41·7 per cent.

The Yorkshire coal-field contains numerous valuable seams of argillaceous iron ores. We annex the composition of five of the seams under the manor of Healaugh Swaledale, according to analyses made by Dr. Odling.

Composition of Yorkshire Argillaceous Iron Ores.

	1.	2.	3.	4.	5.	Mean.
Carbonate of iron	80·50	70·80	75·80	79·00	65·59	74·3
,, lime	3·48	11·72	4·72	8·36	21·28	9·9
Silica and clay	8·72	10·72	10·60	10·30	6·16	9·3
Carbonate of magnesia	·25	·63	..	..	1·23	·43
,, manganese	traces	traces	traces	..	..	..
Sulphur	..	..	..	..	..	·63
Carbonaceous matter / Moisture and loss	7·05	6·13	8·88	2·33	5·74	5·44
	100·	100·	100·	100·	100·	100·
Yield of metallic iron	38·8	34·17	36·6	38·1	31·6	35·8

The Scotch mineral field contains large quantities of argillaceous iron ore. Before the discovery of the more fusible carbonaceous variety these ores formed the chief supply of the blast furnaces in this district.

Composition of Scotch Argillaceous Iron Ores Analysed by Dr. Colquhoun.

	1.	2.	3.	4.	5.	6.	7.	8.
Protoxide of iron	35·22	45·84	42·15	38·80	36·47	47·33	43·73	53·03
Peroxide of iron	1·16	..	·80	·33	·40	·33	·47	·23
Carbonic acid	32·53	33·63	31·86	30·76	26·35	33·10	32·24	35·17
Protoxide of manganese	..	·20	..	·07	·17	·13	..	..
Lime	8·62	1·90	4·93	5·30	1·97	2·00	2 10	3·33
Magnesia	5·19	5·90	4·80	6·70	2·70	2·20	2·77	1·77
Silica	9·56	7·83	9·73	10·87	19·20	6·63	9·70	1·40
Alumina	5·34	2·53	3·77	6·20	8·03	4·30	5·13	·63
Carbonaceous matter	2·13	1·86	2·33	1·87	2·10	1·70	1·50	3 03
Sulphur	·62	..	..	·16	..	·22	·02	..
Moisture	..	·99	..	..	..	..	..	..
	100·37	100·68	100·37	101·	98·09	97·94	97·66	98·59
Yield of metallic iron	28·4	35·3	33·	30·	28·4	36·7	31·	40·9

A fine quality of argillaceous ore is extensively smelted in Maryland; it is found in the tertiary deposits near Baltimore, imbedded in a tough clay, in horizontal layers near the surface of the ground, and seldom extending to the depth of 50 ft. The ore, evidently carried by floods from the coal region, is found associated with well-preserved trunks of trees, and other vegetable matter. It is very pure, close and compact, and furnishes a superior iron for the forge.

Blackband, or Carbonaceous Iron Ore.—Most valuable seams of carbonaceous iron ores belong to the Scotch and North Staffordshire coal-fields. The thickness of the seams in these fields varies from a few inches to several feet. It is observed, however, that the thickest seams are not so rich in metal as the thinner, and as a rule the quality is also inferior. The general composition of the richest of the Scotch carbonaceous iron ores will be seen from the following analyses, principally by Dr. Colquhoun;—

	1.	2.	3.
Protoxide of iron	53·03	40·77	53·82
Peroxide of iron	·23	2·72	·23
Carbonic acid	35·17	26·41	34·39
Lime	3·33	·90	1·51
Magnesia	1·77	·72	·28
Silica	1·40	10·10	2·00
Alumina	·63	..	..
Carbonaceous matter	3·03	17·38	7·70
Moisture	1·41	1·00	..
	100·	100·	100·
Yield of metallic iron	41·2	34·6	41·6

The following analyses of the blackband ironstone, as worked in Staffordshire, made by R. Heath and J. C. Homer, show the blackband of this district to be pure, rich, and free from phosphorus and sulphur;—

ANALYSES.

	1.	2.	3.
Oxides of iron	95·31	94·32	93·42
Alumina	0·59	0·67	0·62
Lime	2·17	2·66	3·96
Magnesia	0·25	0·27	0·24
Silica	1·68	2·08	1·76
Sulphur	trace	trace	trace
Phosphorus	trace	trace	trace
	100·	100·	100·

Seams of this ore occur in walls and exist in various coal-fields, but generally the produce of metal is not equal to that obtained from the varieties we have mentioned.

Iron Pyrites.—Bisulphide of iron is remarkable for its yellow colour, its brilliant metallic lustre and crystalline structure, being generally found either in distinct cubical, or dodecahedral crystals, or in rounded nodules of radiated structures. It was formerly disregarded as a source of iron on account of the difficulty of separating the sulphur; but since the demand for both iron and sulphur has so largely increased, an inferior quality of the metal has been extracted from the residue left after burning the pyrites in the manufacture of sulphuric acid.

The above-mentioned species form the only valuable minerals for the manufacture of iron. Other compounds of iron, such as arsenical iron, carburet of iron, phosphates, sulphates, chromates, muriates, titanates, and silicates of iron, are incidental admixtures to these ores; they seldom are smelted by themselves.

In respect to the action of the ores in the furnace, they are generally divided into refractory and fusible. The latter are those porous, spongy ores, which easily combine with carbon and form grey iron; all the hydrates and some of the soft red oxides belong to this class. Magnetic ore, specular ore, particularly the crystallized variety, sparry ore, and the compact carbonates, are termed refractory ores.

Alloys of Iron.—Whenever alloys which are composed of other metals are useful, those of iron are pre-eminently so. In fact, pure iron is a useless substance for all practical purposes, except the manufacture of steel. If therefore alloys must be formed to make this metal useful, the question naturally arises which of them are the most generally useful, and which are so only to a limited extent. When iron in its pure state is not suited for practical purposes, and we are compelled to combine it with other matter, and when it is extremely refractory, thus causing expense in working it, it is a question of great importance to the manufacturer to determine what kind of foreign matter to combine with it, in order to secure the greatest benefit to himself and to the consumer. The expenses of making iron are chiefly in its smelting and refining, and the benefit of economy must be sought for in these operations. Smelting is cheapest when the metal and fluxes are most

fluid; and the labour of transforming crude iron into wrought iron is least when the impurities can be removed in the shortest time and with the least labour.

Iron and oxygen are not fusible at all; they do not assume a metallic form until they become a salt—such as magnetic oxide. Iron may combine with a little chlorine, which causes it to be fluid; but this renders it extremely brittle when cold. We have no other evidence of the combination of iron and chlorine, than that iron melted under a cover of chlorides is very pure, fluid, and brittle, of a bright silvery colour and lustre. When this very fusible metal is gently heated, it is converted into very refractory iron—becoming fibrous and extremely tenacious. The melting of iron under a cover of chlorides is not so easily performed; it succeeds best when turnings of good grey cast iron are melted by applying a very gentle heat, with a flux composed of common salt, lime, and alumina.

The affinity of iron for sulphur is very great; it is tedious to remove all the sulphur from it when once combined. Iron absorbs sulphur from all other metals, from fluxes, and from carbon. Oxygen or chlorine are the only substances which will remove sulphur, and before they enter into combination with iron all of it must be removed. The various forms of the legitimate compounds of iron and sulphur are of no interest to us. Small quantities of sulphur, quarter of 1 per cent. in the metal, not only are injurious to iron, but cause expense and vexation in refining. Much sulphur in iron causes it to be cold-short, brittle, and hard when cold; a little produces hot-short and brittleness when the iron is hot. Sulphur has a remarkable influence on iron; it is similar to that of cadmium. At low heats it does not cause fluidity; the iron assumes a mushy appearance, but is not fluid. When the same iron is heated to a higher degree it becomes perfectly fluid, white, and compact. Similar phenomena occur with carburets of iron; and we are inclined to conclude by analogy, that such is the case with all alloys, particularly when one substance is far more volatile than the other. When iron is combined with sulphur to such an extent as in pyrites, it is extremely hard; oxygen does not attack it, and strong acids do not affect it. When it contains only a trace of sulphur, it is far more liable to corrosion than pure or alloyed iron. Sulphur is not attacked by oxygen, whereas iron is, and it requires the close cover of sulphur to protect it. When metals which have no particular affinity for sulphur, such as gold, are mixed with the sulphuret of iron—the decomposition of the sulphuret advances more rapidly. It appears that in this case moisture finds access into the pores of the metal, which accelerates the oxidation. This electrical action, which is frequently observed in metallic alloys, arises in consequence of imperfect union; it is by no means a universal case. Iron appears to melt with sulphur in all proportions; but it either requires a certain amount to form a chemical union of perfect fluidity, or so high a degree of heat that a proper arrangement among the particles becomes possible. In the latter case, a union is formed which is not easily destroyed. When iron containing sulphur is heated red hot, and suddenly cooled in water which is a little warm, a smell of sulphuretted hydrogen is perceptible, even when only a trace of sulphur is present. A quantity of sulphur in ore, coal, or flux, which is so small as to escape the most skilful assayer, is sufficient to cause iron to be red-short.

Phosphorus and Iron.—Phosphoric acid is frequently found in iron ores; quite as well in those which are primitive as in those of the coal formations and younger ores. Phosphoric acid in contact with coal is converted into phosphorus; and as iron has strong affinities for phosphorus, we always find it in the metal if it has been in the ore or the fuel—particularly in grey metal. When white metal is smelted, a large quantity of phosphorus is absorbed by the slag as phosphoric acid. Phosphorus, unlike sulphur, causes iron to be very fluid, even in small quantities and at low heats. Owing to this property, phosphorus is less vexatious when present in iron than sulphur. Iron with phosphorus is white, close, and compact; assumes a high polish, and is less attacked by oxygen than other alloys. It is extremely brittle, so that the least force will break it when cooled below 32°. Phosphorus will drive sulphur from iron when the latter is present; still they may be both in crude iron at the same time. Sulphur is removed before phosphorus can be evaporated. Iron which contains phosphorus melts easily, works well in refining, is easily welded, and is in fact very manageable.

Carburet of Iron.—We do not know if a carburet of definite proportions is in existence; grey cast iron is a mere mechanical mixture, and so is steel. We are not acquainted with any carburet. It appears that the refractory character of carbon does not admit of an intimate union but under forced conditions. Carbon will liberate itself in spite of the affinity existing between it and the metal. Carbon unites with iron very readily in all proportions, from a small per cent. of iron in graphite, to a quarter of 1 per cent. of carbon in steel. The compounds containing much carbon are not fusible; they are mere black powders. It appears that iron cannot absorb more than 6 per cent. of carbon—grey or white crude iron—without losing cohesion. Iron with carbon may be soft when grey, but is hard when white. Grey iron is imperfectly fluid—limpid—at all times; white iron is mushy, like a sulphuret, but assumes a perfect fluidity when heated to a high degree. There is a striking similarity between the combinations of sulphur and iron, and those of carbon and iron, which extends even farther than mere fluidity. White iron has all the qualities of a perfect alloy; grey iron that of a mechanical mixture. We will endeavour to show the nature of this difference. White iron, that is a perfect alloy, we do not observe but in crude iron which has been smelted from sparry ore, and in hardened steel. The intimate union of carbon and iron which is requisite to form an alloy is not in existence in grey iron, and in steel only when hardened. In white crude iron, sufficient carbon remains in union with the metal to cause its fluidity; this, for want of other matter, is chiefly effected by carbon. When more carbon than about 6 per cent. is removed from this iron, it ceases to be fusible in the furnaces. The carbon is naturally in very intimate connection in the specular ore, and the heat in smelting removes merely a part of it, and chiefly oxygen. A definite arrangement of the atoms of carbon and iron exists already in the ore, which is in a great measure destroyed; a certain portion of the ore, however, retains its original constitution, which with the difference of oxygen or these particles of carburet, are surrounded by a certain number of particles of pure iron which prevent their decomposition Thus it is that the

carbon in this iron resists the effects of oxygen for a longer time than that in other kinds of iron, and also in steel: and to this extent we may call this iron a true alloy. It is the intimate contact of a few atoms of carbon which imparts character to a large mass of iron. In grey iron, or tempered steel, the atoms of carbon fill merely the pores; and if we assume that carbon is dissolved in hot iron—which we are permitted to do because similar cases happen with other substances—we at once discover the cause of hardening. It is the sudden contraction of the metal, and its strong cohesion, which condenses the carbon between its particles, and forces it to remain in chemical union. The strong cohesion in the atoms of carbon is the cause of grey iron; and the want of cohesion between the atoms of the latter, or want of fusibility, is the cause of the hardening of this metal by sudden cooling. We see here at once the philosophy of hardening and tempering, and that an alloy of arsenic or phosphorus cannot be tempered or hardened, because that essential condition, the separation of the particles, is wanting. Carbon crystallizes at a much higher heat than iron, and is solid; it also separates before iron which is slowly cooling has sufficient cohesion to prevent its crystallization. Carbon thus causes hardness in the same manner as other substances; and if we disregard tempering, or annealing, there are substances which impart a higher degree of hardness to iron than carbon. It appears that manganese induces the solution of carbon in iron more than other substances; still, there are some other metals which produce the same effect. Iron exerts a powerful influence on carbon at low heats and in the presence of other matter. It absorbs it and retains it as a black powder. This is the case in grey iron, and blistered and annealed steel. In strong iron, and grey iron of great cohesion, carbon is condensed into graphite and crystallized. We infer from these and other facts, that carbon exists in white steel, white iron, and in hardened steel, in the form in which we find it in the diamond.

Silicon.—This substance appears to have as much affinity for iron as carbon, and if not found in such large quantities, it is nevertheless present in all commercial iron and in the best steel. The general diffusion of silicon—or silex, silica—its presence in all iron ores, together with its strong affinity for iron, indicates as certain its presence in iron. Silicon, alloyed with iron, causes the metal to be very hard and brittle. All the iron smelted from silicates, in which the oxides of iron are united by fusion to silex, is extremely hard and brittle; more so even than phosphorus would make it. When crude iron is largely alloyed with silicon, it causes the wrought iron made of it to be brittle and soft; it forms therefore the poorest kind of bar iron. Half of 1 per cent. of silicon causes crude iron to be brittle; but iron may contain 10 per cent., and more, of silex, and be perfectly malleable. The first is an alloy, the second a mechanical mixture. When silicious iron is exposed to a gentle heat, tempered in sand or iron ore, the silicon oxidizes and separates from the particles of iron and forms particles of silex, which do not combine chemically with iron. Here silex is in the same form as carbon in annealed iron. Berzelius relates that he assayed a specimen of perfectly malleable iron, which furnished 19 per cent. of silex. Fibrous wrought iron may contain large quantities of silex, and be perfectly malleable and ductile, but when the iron contains in the meantime carbon, an exposure to a high red heat will convert the silex into silicon, and cause the iron to become short and brittle.

Aluminum.—We shall not allude to the alloys of boron, selenium, tellurium, and some other substances, because these are of no practical value. Aluminum appears to have a beneficial, toughening influence on iron, and it is asserted that wootz—East Indian steel—contains this metal as alloy. It is certain that all iron smelted from clay ores is stronger than that smelted from any other kind of ore, particularly in the form of wrought iron. Pure alumina combines readily with iron when borings of grey cast iron are smelted with it. Such cast iron contains, however, silicon and other substances, which interfere with the true character of the alloy. It may be difficult to form a pure alloy of iron and alumina, because a high heat is required, at which other substances whose presence cannot be avoided enter into combination. In fluxing iron and aluminum by a substance which has a strong affinity for both, so as to reduce the point of melting, pure alloy may be formed, provided the flux is volatile and may be driven off. Pure carbon or arsenic may form such a flux. It is stated that iron alloyed with alumina is very hard and tough, and exhibits the nature of Damascus steel. This is a strong indication of the refractory nature of the alloy; it does not combine uniformly with the mass of the metal.

Arsenic.—This substance causes iron to be very fluid, hard, and brittle. One part of iron borings melted together with two parts of arsenious acid form an arseniuret of iron, of definite constitution. The best manner to alloy iron with arsenic is by cementation. Arsenic combines very intimately with iron; its alloy cannot be hardened like steel, nor can it be annealed. When the heat in melting this alloy is too strong, the arsenic evaporates rapidly, throwing out iron which burns with greater brilliancy than any other compound of iron. It burns in similar manner to a very hot zinc alloy, but with more vigour. Notwithstanding the great affinity between iron and arsenic, in cooling or crystallizing both separate to a certain extent, but in a different manner than iron and carbon. When an arsenical alloy is cooled and polished, it shows on examination with a microscope a mass of dark crystals imbedded in a bright white metal, which forms a regular network, filling the spaces between the crystals. We suppose the crystals may be iron and a little arsenic, and the cementing metal chiefly arsenic with a little iron, these are conditions which exist in other alloys. If this alloy is tempered at a red heat, the arsenic evaporates, and causes the remaining metal to be extremely brittle. The same cause is active in hardening this substance. If the metal thus weakened by tempering or hardening is melted again, it forms a coherent, hard, compact iron, but with less arsenic. This alloy, so long as any arsenic is perceptible, cannot be forged or welded; it is hot-short and cold-short.

Arsenic exerts a peculiar influence on iron; it causes cast iron to be extremely brittle, but, when removed from it by refining, and converting it into bar iron, it is found to be exceedingly soft and pure. Most of that iron which furnishes the best cast steel is manufactured from ores which contain arsenic.

Chromium.—Iron combines with chromium quite easily, and forms an exceedingly hard alloy,

which is brittle. It is, however, an excellent preservative of iron from rust. By converting crude iron into bar iron, all the chromium contained in it is easily removed. Chromium is very refractory, and consequently we entertain serious doubts of the brittleness of the alloy of this metal and iron. Sixty parts of iron alloyed to forty of chromium is stated to be very hard and tenacious, cutting glass equal to a diamond. Chromium, as well as iron, are both refractory, and, as the heat required to melt either is high, it is difficult to obtain the alloy without an admixture of other matter; to the latter must be assigned the brittleness which is asserted to belong to it. In smelting these metals, either from their ores together, or omitting them directly, in all instances their purity must be doubted. The only manner in which a considerably pure alloy is obtained is, by smelting filings of pure wrought iron in a clay crucible lined with the pure oxide of chromium and carbon; the first forms a second lining in the latter. The alloy thus obtained is, according to our own experience, very hard, uniform, and tenacious, and shows no signs of crystallization when polished.

Titanium.—This metal appears to be so refractory, and has so little affinity for iron, that it will not admit of a union. A union is, however, effected in the same manner as between lead and iron, that is, by employing a substance which has affinity for both. We have no experience in forming this alloy, and the scarcity of the metal hardly admits of its practical use.

Zinc.—As cast metal, the alloy is worthless; it never will obtain strength. In refining crude iron which contains zinc, the latter evaporates; and by perseverance a fine rough iron may be obtained. In this respect arsenic is superior to zinc; it works with more facility.

Manganese.—The similarity of this metal with iron subjects it to the same laws. It forms similar compounds. In combining with iron it causes it to be more fluid, and consequently harder than it is naturally. This metal is one of the best alloys in combination with iron which is to be converted into wrought iron. It causes cast iron to be hard and brittle; but this assertion must be taken with due allowance for the influence of other matter. The protoxide of manganese is a strong alkali, and forms a very fusible fluid slag with silex. In refining iron which contains manganese, the latter is oxidized before any iron is attacked by oxygen; and its strong affinity for silex removes the latter from the iron. No manganese is ever detected in wrought iron. Crude iron contains it when smelted from ores in which it exists. In manufacturing wrought iron, this substance is, on account of its alkaline and refractory nature, the most useful auxiliary.

Nickel and Cobalt.—These metals, alloyed with iron, appear to exert a similar influence upon it. Nickel is found native and alloyed, in meteoric iron. This alloy has been little examined, and is, to all appearance, of slight practical use.

Antimony.—This combines readily with iron; the alloy is very hard and very brittle. It is useless. The oxides of the metals mixed, and melted with carbon in a crucible, form an alloy at a low heat.

Lead.—This substance does not combine very readily with iron, particularly when the latter is in combination with carbon. When contained in the ores of iron, it separates in the blast furnace from the iron and forms a stratum at the bottom of the hearth. The crude iron thus smelted is extremely hard, becomes very fluid in melting, and works admirably well in the forge fire and puddling furnace, and makes a very tenacious, fine, bright, fibrous iron, of first-rate quality. The fluid alloy of lead and iron is of no practical use; when cast it is brittle.

Tin combines readily with iron, and both mix in various proportions, and form definite compounds. The alloy is always hard, and this hardness increases in proportion to the quantity of tin, until the latter is more than an equal part. This alloy is heavier than iron itself—of greater hardness and lustre, 57·9 of iron and 42·1 of tin is said to be an alloy particularly distinguished. Iron thinly coated with tin forms tin plate. For this purpose a very pure tin is required, or at least a metal free from easily oxidized substances.

Tin added to iron in the puddling furnace, to the amount of $\frac{1}{2}$ or 1 per cent., causes a bright metal, which works remarkably well in squeezing and hammering. It forms a strong iron, malleable, neither red-short nor cold-short. The application of tin for this purpose is rather expensive; we may obtain the same, or similar results, by other means less costly.

Copper.—Copper has no marked affinity for iron, and combines with it only in small quantities. Still, $\frac{1}{10}$ of 1 per cent. causes iron to be red-short. Mixed to cast-iron, it causes cold-short. Wrought iron with copper is stronger, when cold, than pure iron. Its oxides form very refractory silicates, which, together with its permanency under heat, is the cause of its adhering tenaciously to iron. For these reasons it cannot be removed from iron in refining the latter.

Mercury.—Iron does not combine with mercury directly; but when an alloy of iron which contains a metal soluble in quicksilver is brought in contact with it, a combination ensues. Alloys of tin and iron, zinc and iron, silver and iron, may be combined with mercury, and resist the charring heat of wood. It forms a hard, brittle amalgam, similar to that of antimony.

Silver.—Iron melts readily with silver, but the metals separate in cooking, and show the same appearance as arsenic and iron. The alloy is harder and stronger than that of arsenic. This compound oxidizes rapidly. A small quantity of silver, $\frac{1}{2}$ per cent., may be united with iron, and form an intimate union.

Gold.—This metal fuses easily with iron, and fine ornamental works in iron are soldered with it. It is too expensive to form practical alloys with iron. The same may be said of platinum, and the platinum metals. However valuable such alloys may be for scientific purposes, the metallurgist cannot make any use of them.

Manufacture of Iron.—The various kinds of iron are procured from the ores we have enumerated; in some cases malleable iron, its purest form, being obtained by merely exposing a certain variety of ore to heat in contact with charcoal fuel, which has the effect of reducing the ore to a metallic condition; but, as a rule, it is far more economical to get it in the first instance in the impure form of cast iron by smelting the ore in a blast furnace; and this is the method most extensively employed.

Cast Iron.—Before the smelting of iron ore is resorted to, it is most generally dressed and

roasted. Few kinds of ore are exempted from this last operation. The yellow hydrates, brown hematites, in fact all the hydrates, need no roasting; the red hematites, clay ores, compact and crystallized oxides, and the specular ore, may be smelted without roasting. Some magnetic oxides, silicates, and carbonates, are also smelted without this introductory operation. All those ores which contain sulphur, arsenic, carbonic acid, carbon, or are not sufficiently oxidized, ought to be roasted.

Roasting.—The operation has been generally described at p. 1598, but we have a few remarks to make here relating particularly to iron; it is performed either in the open air in heaps, or in closed kilns. These kilns vary greatly in their dimensions. The most satisfactory results are obtained with kilns of the description delineated in Figs. 4222 to 4233. The floor of the kiln is formed of

4222.

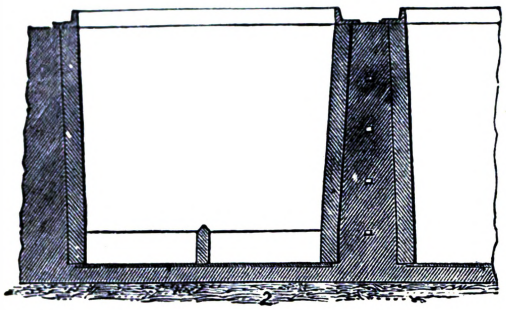

4223.

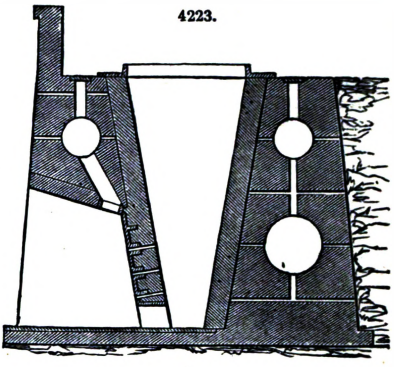

4224.

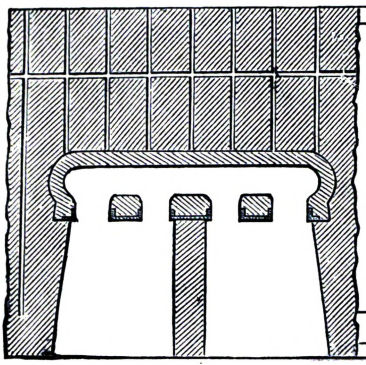

4225.

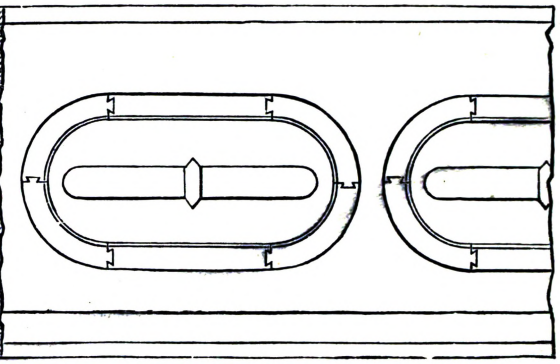

4226.

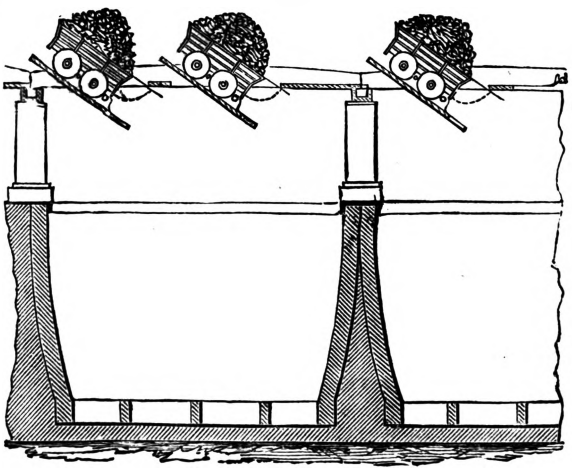

4227.

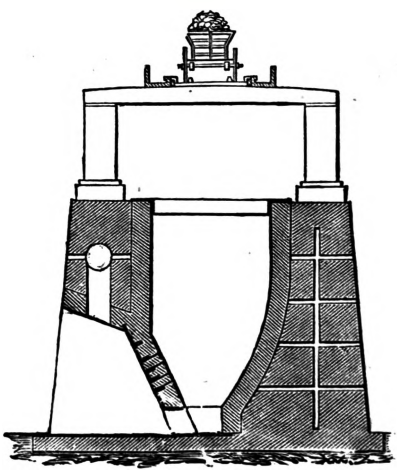

cast-iron plates, about 2 in. thick. The interior measures 20 ft. long, 9 ft. wide at top, and 18 ft. high. It is built of masonry, and lined with fire-bricks 14 in. long. In front are two arches with openings into the inside of the kiln, on a level with the floor, through which the roasted or calcined ore is drawn and filled into barrows or wagons for the furnace. Above these openings, but within the semicircle of the arch, it is usual to leave four or five apertures, 6 or 8 in. square, for regulating the draught. Around the upper edge of the kiln there is placed a cast-iron ring

from 12 to 15 in. wide, with a flange about 6 in. high on the upper side to protect the brickwork from injury during the filling in of the raw ironstone.

At some works the kilns are of a circular form in the interior; at others they are built square

4228. 4229.

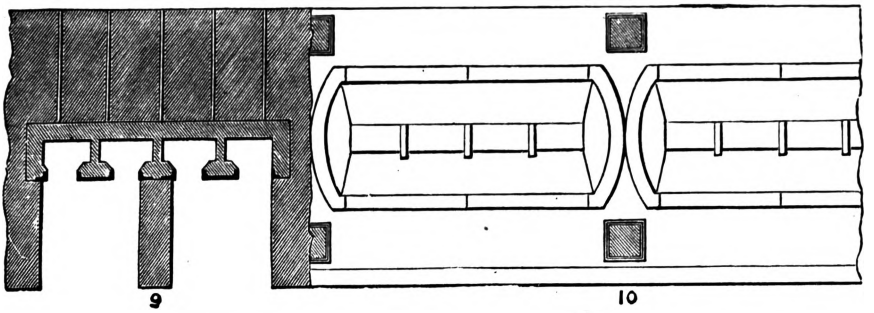

9 10

and sharp in the angles, but preference is generally given to the form represented in the figures. Square kilns, or those having sharp angles in their interior, as in Figs. 4230 to 4233, are objection-

4230.

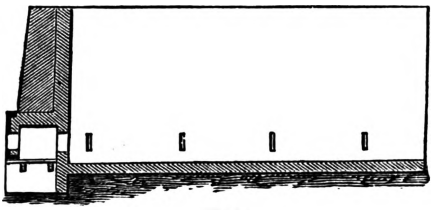

4231.

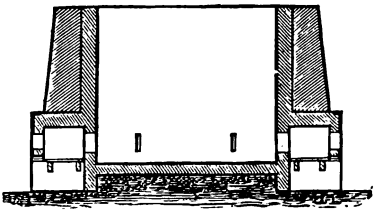

4232.

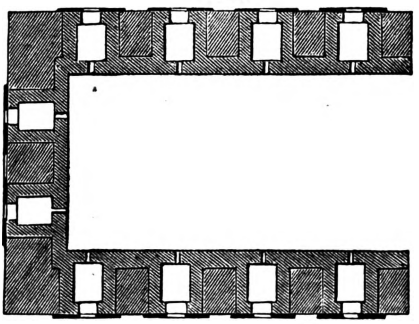

4233.

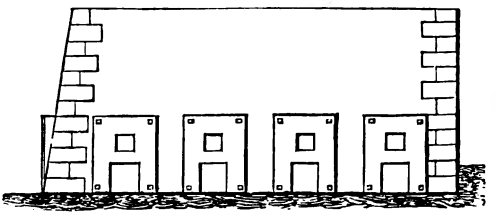

able, on the ground that combustion is slower in the angles than in the centre. If the heat be regulated to properly calcine the centre of the mass, the stone lying in the angles will scarcely have altered from its raw state.

To calcine ores in the kiln two or three small coal fires having been lit on the floor, raw ironstone is placed on top and around them until the whole of the floor is covered with ironstone at a dull red heat. A fresh layer of ironstone, 8 or 9 in. thick, is then added, along with about 5 per cent. by weight of small coal, and, as soon as this layer has reached a red heat, another is added. This addition of fresh layers of raw ironstone and coal is repeated as fast as the previous layers have been heated to the necessary degree.

As a consequence of the small quantity of coal used in the process, by the time that the kiln is filled up with the successive layers of raw ironstone, the lower portions which were first ignited are comparatively cold and fit for drawing.

In Scotland and in Staffordshire the calcination of the ironstone is generally effected in the open air. A space is roughly levelled, on which a stratum of coal of a few inches in thickness is laid, upon this a layer of raw ironstone of 10 or 12 in. in thickness is placed, and then a quantity of small coal is thrown over the stone. Additional layers of ironstone and coal are added until the heap reaches to a height of 4 or 5 ft. The bottom stratum of coals is then fired, and in a few hours the whole mass will be ignited. The operation, from the time of firing till the heap has cooled down sufficiently for drawing, will occupy from eight to twelve days, depending on the nature of the stone, quantity and quality of fuel, and size of the heap.

At many works kilns have been erected with a tramroad sufficiently elevated to allow the wagons to discharge directly into the kiln, Figs. 4226 to 4229. This plan is attended with a saving of labour; but with kilns of this shape we do not consider it to be a desirable practice. Each wagon probably holds 2 or 3 tons of ore, which fall in a single heap, measuring perhaps 2 or 3 ft. in height. Over this we will suppose that a quantity of coal is thrown and then left to calcine. If an abundance of coal is used the whole will be properly burnt; but if the quantity of

fuel is proportioned only to the requirements of a well-conducted kiln, the centre of the heap will be more or less imperfectly roasted. From careful observation we are inclined to believe that filling with the shovel is eventually the cheapest plan, and is attended with the most satisfactory results in the blast furnace.

The calcining kilns, Figs. 4234 to 4237, were erected at Middlesborough from the designs of John Gjers. They are of a circular form, and have wrought-iron shells; but, unlike ordinary kilns

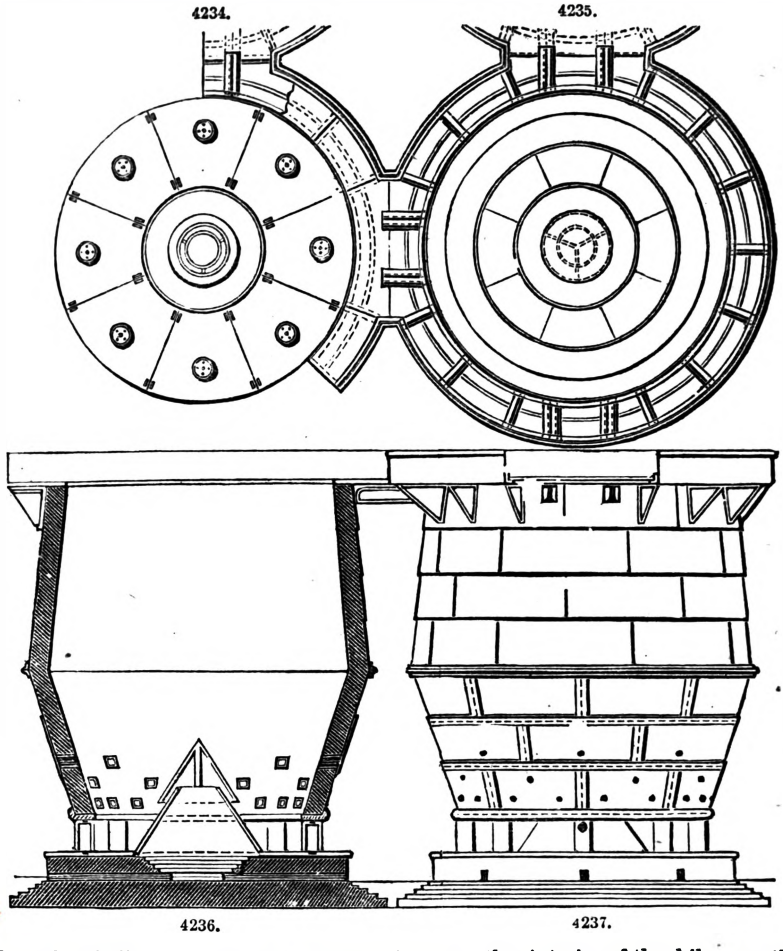

of this class, the shells are made of the same shape as the interior of the kilns, so that there is a uniform thickness of 15 in. of fire-brick lining at all parts. The shell and lining of each kiln rest upon an annular cast-iron entablature, which is supported by eight hollow cast-iron pillars cast on the base-plate. By this arrangement a space for drawing the charge is left all round the bottom.

The principal dimensions of each kiln are;—Internal diameter at the bottom, 14 ft.; at the largest part, 20 ft.; and at the top, 18 ft. The height from the base-plate to the top of the columns, 2 ft. 3 in.; thickness of the entablature, 4 in. Height of the shell from the top of the entablature on which it rests to the level of the largest diameter, 9 ft. 2 in., and from that level to the top of the shell, 12 ft. 2 in.; total height of each kiln from the base-plate to the top of the shell, 24 ft. The base-plate is 2½ in. thick, and is 20 ft. in diameter; it is cast in eight pieces, and rests upon brickwork in which the air-passages are formed. The cubic contents of each kiln is 5500 cub. ft.

As will be seen in Fig. 4236, each kiln is provided with a cast-iron central cone, made in two pieces, so arranged that an annular space is left between them. This cone spreads the calcined ore outwards towards the openings through which it can be withdrawn, and it also acts beneficially in assisting to break up any large scars or lumps, partly fused together, which may happen to come down. The central cone might, as far as the mere spreading action is concerned, be made plain and in a single piece; but the form shown in Fig. 4236 has been adopted by Gjers with a view of, in some cases, employing the annular space between the two cones for the admission of waste gas from the furnace. Where the quantity of furnace-gas is not sufficient to be applicable to this purpose, the double cones still furnish the means of giving a good air supply to the kilns.

In the case of the particular kilns we are describing, the central cones are each 8 ft. in diameter at the bottom, and 8 ft. high, and the air is conducted to them through eight channels or flues formed in the brickwork at the base of each kiln. In addition to these passages there are a number of holes, Fig. 4237, for the supply of air, formed in outer shell. The kilns are placed at a distance of 25 ft. apart from centre to centre, and each is surrounded at the top by a gallery formed

of wrought-iron brackets covered with cast-iron plates. The galleries of four kilns are connected with each other at four points, the space between the kilns being bridged over with wrought-iron girders.

Besides the kilns which we have described, there are two others at the same works which have a capacity of 8000 cub. ft. each, and each of these kilns supplies calcined ore to a furnace making from 250 tons to 260 tons of iron weekly. The stone is left in the kilns about two and a half days, and the consumption of small coal and breeze amounts to 1 ton for every 20 tons of stone calcined. In the case of the larger kilns which we have already mentioned, and which are 34 ft. high instead of 24 ft., this consumption has been reduced to 1 ton of fuel for every 25 tons of stone calcined.

Magnetic ore should be roasted, if it is desirable to smelt carburetted iron, for this ore is too compact to admit of the absorption of carbon, and it must be made porous in order to form grey iron. It contains also very frequently iron pyrites, blende, galena, arseniuret, silica, and other substances, which it is necessary to oxidize. When specular iron contains pyrites, which frequently happens, it must be roasted. Sparry ore is to be roasted to remove carbonic acid. If these ores are pure, that is, free from sulphurets, a strong and rapid heat may be made; but when they are impure, a red heat, with a liberal supply of air and moisture, are requisite to succeed well. Impure ore, such as argillaceous ore, clay ore, or hematites, in fact all ores which contain silex, must be roasted gently and slowly at a low heat, and with a long-continued fire. Ore which has been roasted must be red, friable, and porous. When black and magnetic, it is converted into magnetic ore, and will not smelt grey iron. When it has been too hard burned, it should be thrown aside, or mixed with well-roasted ore in certain proportions. When white iron for the forge is to be smelted, little attention is required in roasting the ore; still that from roasted ore works better in the forge, and forms a stronger iron.

Fluxes.—In practice we are limited to a few minerals as flux—limestone or chalk for silicious ore; and silicious clay, or other silicious compounds, for calcareous ore. When either lime or silex is in excess in any ore, the work in the furnace is imperfect; much coal is used, and labour wasted. One of the first maxims in selecting flux should be that it contains an admixture of iron; and if such cannot be obtained, which is most frequently the case with limestone, an impure is preferable to a pure limestone. The leading principle in all smelting operations is, to smelt by as low a heat as possible. The oxidized elements which enter an iron blast furnace do not melt by themselves, at least not at a low heat; a mixture, and an intimate mixture of ore and fluxes, is the most profitable condition under which smelting may be carried on. If these conditions cannot be realized absolutely, because it would be too expensive, they ought to be present to the mind of the smelter at all times, and his endeavour must be to approach them. Limestone does melt, but not pure lime; limestone mixed with silex melts more readily than when pure, and still more so when clay is present; and at a lower heat still when iron also is added. An ore which contains all the elements requisite to melt at a moderate heat, and still is easily fusible after the metal is removed, is in the best form of ore; it works with the least fuel. If the latter condition is not complied with, or the residue of the ore fusible, it belongs to the refractory kind, and is expensive in smelting. The true theory of smelting is, to fuse the metal first, and remove it from the ore at a lower heat than that at which the impurities melt. All the metal should be removed before slag is formed. When these conditions are complied with, and the slag melts at a moderate heat, smelting goes on most profitably. In practice it does not happen very often that ores which act in this manner are found, at least not in large quantities. Bog ores, yellow and brown hematites, are sometimes found of a suitable composition. In the State of New Jersey, U.S., at Andover, a primitive ore is mined and smelted which affords flux in its own composition. These ores prove in practice the correctness of the above statements. Fluxes, of course, do not always consist of the same substance. If silex is the predominating or only foreign matter in the ore, limestone must be the flux; and limestone which contains clay, like some of that in the coal formations, is preferable to pure or silicious limestone. If lime is present in the ore, and if it is the cause of resistance to fusion, silex or silicious rock containing clay must be added in order to smelt the ore perfectly. Clay ores, such as frequently occur and are mined in the coal formation, do not work so well with pure limestone as with a silicious limestone. Iron, when present in these fluxes, no matter if they are limestone, slate, shale, or clay, has a beneficial influence; because it is in small quantities which cannot easily be removed, it causes the flux to melt and float down until it meets the ore, upon which it will settle and with which it will combine. It is easily perceived that when an incongruent mass of various infusible substances is brought in contact, it will require a long time, and consequently much fuel, before they are united. In all cases, one of the ingredients in the furnace ought to be fusible at a moderate heat. Blast-furnace slags, especially the white and grey varieties, have been used upon emergency as fluxes for ores free from gangue, or ores containing much silica.

The limestone used as flux is usually charged into the furnace in the state in which it comes from the quarry, the preliminary operations being limited to reducing the dimensions of the blocks, that calcination may be the more readily effected. In a few establishments, however, the stone is calcined in kilns, by which the water and carbonic acid is expelled, and lime obtained in the caustic state. This process is performed in kilns, of the construction employed for the calcination of ores, and is conducted throughout on nearly similar principles.

Amount of Fluxes.—On the amount of fluxes not much can be said; a certain proportion of every principal constituent in the mixture of ore and flux is advantageous. The average of a good composition of furnace slag is nearly 40 silica, 20 lime, 12 alumina, 12 magnesia, and some oxide of manganese and oxide of iron; there are, however, others which answer equally as well. This is altogether a practical subject, so far as particulars are concerned. No slag, or composition of ore and flux, can be determined *a priori*, nor with the assistance of the best assays of all the minerals in composition. We may come very near to the true composition, but not always to the definite quantities. Purely silicious ore requires more limestone than that which contains

silex and clay. Smelting by mineral coal occasions the use of more lime than smelting by charcoal; and by impure coal more than that coal which is not much adulterated with ashes. Fluxes should be broken into equal fragments of 2 in. for charcoal, and 3 to 4 in. for anthracite coal or coke.

Mixing of Minerals.—In order to ensure regular and economical work in a furnace, the minerals should be mixed in certain proportions, according to the quantities of each kind which are at disposal. In this instance, as in others, it is true that the greater the number and variety of elements, the more prosperous will be the work. Six kinds of ore work better when mixed together in a furnace, than two kinds. One kind of ore does not work well; it requires much coal, and is vexatious to the smelter. In mixing the ore a certain quantity—say fifty wheelbarrowfuls—are spread on a level floor in the bridge-house, in a stratum of uniform thickness. Upon this a stratum of a second kind of ore is spread; then a third, fourth, &c., all in ratio to the mixture calculated. On the top of this bed of ore, the flux is levelled in the necessary proportion. From this bed a charge, ready mixed, is weighed as it is wanted. At many furnaces this important part of the business is often left to careless hands, who take a certain quantity of ore from each kind, also some flux, and charge that into the furnace promiscuously. On the same principle that many kinds of ore work better together than each singly, and on the principle that the close contact of various particles of matter causes them to unite, or melt, at a lower degree of heat than when farther separated; for these same reasons the ore ought to be well mixed. It should not be placed in the furnace in heaps—that is, a wheelbarrowful of magnetic ore in one part, and half a barrowful of hematite in another place, and thus with the other kinds. If the fragments of ore and flux are all of the same size, the rule in mixing them must be, to associate together a certain number of pieces of each kind of ore, and add its ratio of flux. A charge composed of such uniform parcels we may call a unit of the composition.

Fuel.—Charcoal was at one time exclusively used in the smelting of iron; it is of great value in making the best descriptions of iron, and it is still in use in many parts of the world, especially in the United States, Russia, and Sweden. In Great Britain coal is now the only fuel used with iron, there being in 1871 but one furnace smelting hematite ores with charcoal.

Before the introduction of the hot blast the coal was generally converted into *coke*, to assimilate it as much as possible to the original and better material. But the hot blast has enabled iron-masters to dispense in many cases with the coking process, and to use raw coal in the furnaces. The quality of the iron has, however, suffered by the change, as the sulphur and other deleterious ingredients, which are partly eliminated by the process of coking, remain fully present in the furnace when raw coal is used.

It is only certain sorts of coal that are found suitable for use raw; others have been tried, but failing to give satisfactory results, the coking process has been retained.

Blast Furnaces.—We have already, in the article Blast Furnace, described the construction and application of these important appliances. However, the following details and description of the erection and working of two blast furnaces at Newport, near Middlesborough, taken from a paper read before the Institution of Civil Engineers by Bernhard Samuelson, merit particular notice.

The ores, the fuel, and the flux are charged as usual at the top of the furnace, in proportions varying according to their chemical constituents and mechanical condition, and according to the greater or less perfection of the furnace and of its accessories. Air is blown in through tuyeres at the hearth, scoria flows over the dam, and the iron is allowed to run from the tapping hole at proper intervals. Economy in smelting is sought in a diminished expenditure of fuel and flux, and of labour in producing a ton of iron from a given weight of iron ore, and is promoted in the first place in all ores containing much moisture or carbonic acid, or both, by their perfect calcination before they are charged in the furnace. Secondly, by the proper coking of the coal, where it is too bituminous, or too liable to decrepitate, to be used raw. Thirdly, by heating the air before it is introduced into the furnace, so that a very high temperature may be created in the zone of fusion, immediately above the tuyeres. And fourthly, by durability and simplicity of construction of the entire plant, in order to ensure the utmost constancy and regularity in working.

The ironstone smelted in Cleveland is the argillaceous ore from the lias, containing when dried from 33 to 40 per cent. of protoxide of iron, and from 2 to 7 per cent. of sesquioxide of iron, equal to 26 to 33 per cent. of metallic iron, which percentage is increased in calcined ironstone to from 37 to 40 per cent. by the moisture and part of the carbonic acid being removed by calcination.

The raw stone also contains

From	20 to 25	per cent. of	carbonic acid.
„	3 to 4	„	magnesia.
„	5 to 8	„	lime.
„	10 to 15	„	silica.
„	10 to 15	„	alumina, and
„	1 to 1½	„	phosphoric acid.

The fuel is the coke of South Durham, yielding

From	85 to 92	per cent. of	carbon,
„	½ to 2	„	sulphur, and
„	4 to 12	„	ash.

The flux is raw or burnt limestone, chiefly from the Pennine range, containing in the raw state from 87 to 96 per cent. of carbonate of lime.

The fuel and limestone consumed, in order to produce a ton of grey foundry pig iron from Cleveland ironstone, without admixture of foreign ores or of the cinder from rolling mills, are from

19 to 28 cwt. of coke, and from 10 to 14 cwt. of limestone, the figures varying with the fusibility and richness of the ore, the quality of the fuel and flux, the heat of the blast, and the capacity and regularity of working of the furnaces. In one of the furnaces, the average consumption of fuel, excluding the six weeks immediately after blowing in, has been 20·35 cwt. to the ton of iron produced; the minimum quantity used in any one week 18·78 cwt. the ton of iron, and the maximum quantity 22·12 cwt. the ton of iron. The average quantity of calcined ironstone used has been 46·11 cwt. the ton of iron; the minimum quantity used in any one week 44·16 cwt. the ton of iron, and the maximum quantity 48·04 cwt. the ton of iron. The average quantity of limestone used has been 10·71 cwt. the minimum quantity in any one week 10 35 cwt., and the maximum quantity 11·26 cwt. the ton of iron. The average weekly produce of pig iron was 430 tons, the maximum 500 tons. These quantities of coke and flux are about 15 per cent. less than those of five other furnaces erected in 1863-64, in which the same materials are used; but the internal capacity of which, 16,000 cub. ft., as against 30,000 cub. ft., is less in the proportion of nearly 1 to 2 than those being described, the heat of the blast being nearly the same.

The quantity of coal used in the kilns, in calcining the ironstone and limestone producing a ton of iron, is 3·94 cwt. With a regular supply of ironstone 3·50 cwt. is sufficient.

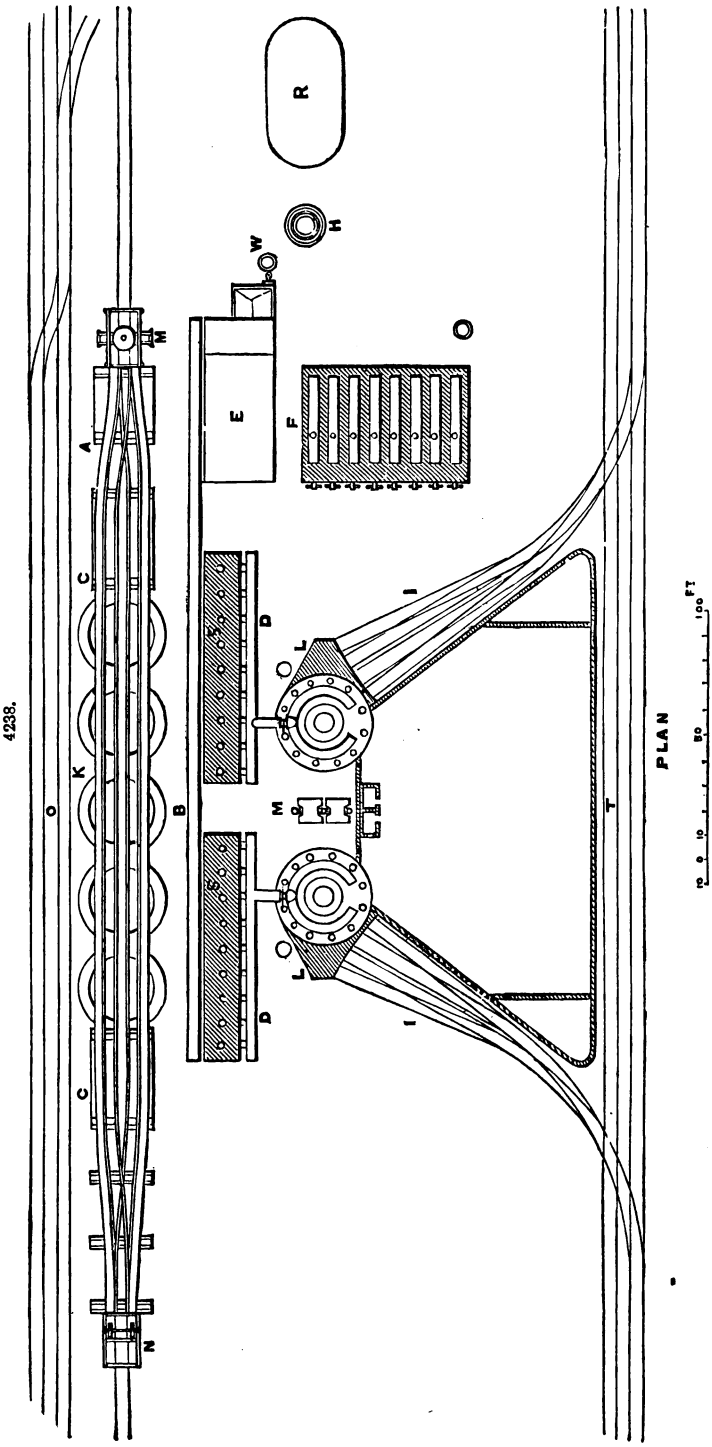

Fig. 4238 gives a ground plan of the works. A is a coal bunker; B, cold-blast main; C C, coke bunkers; D D, hot-blast mains; E, engine-house; F, boilers; H, chimney; I I, slag roads; K, kilns; L L, furnaces; M M, hoist; N, drop; O, mineral sidings; P, pig beds; R, reservoir; S S, stoves; T, metal road; W, well. The whole of the raw materials, which are received in trucks, of which the gross weight varies from 10 to 17 tons, enter at the east end of the works, and descend by gravity to a steam lift, which raises them to a gantry surmounting a series of calcining kilns and coke boxes. The trucks have movable bottoms, and the ironstone, limestone, and coal, used in calcining, are discharged from them into the kilns in proper proportions. The coke is allowed to fall into the

boxes or bunkers, having hoppers and slides at the bottom, on opening which the coke falls into barrows, ready for charging in the furnaces. The calcined ironstone and burnt limestone, when withdrawn from the kilns, are likewise raked into barrows. The trucks when emptied descend by the drop, and are run into sidings ready for removal from the works. The barrows are raised to the tops of the furnaces by the steam lift. The slag flows from the furnaces into slag boxes or bogies, and is removed by a locomotive engine. The pig iron is tapped from the furnaces four times in every twenty-four hours, and is loaded on trucks from the pig beds. These trucks leave the furnaces by a railway in the opposite direction to the one by which the materials enter, joining the main line of the North-Eastern Railway at the western side of the works, where there is also a private wharf on the river Tees, forming part of the works, at which vessels of from 600 to 800 tons can take in their cargoes. All trucks, whether full or empty, enter at one end, and leave at the other, by which means the greatest economy of labour and time in working the traffic is secured.

The blowing engines, four in number, are placed in the engine-house at the east end. The series of eight boilers for supplying steam to those engines, to the steam-cylinder for lifting the trucks, and to the small engine which works the hoist, are placed as shown. The blowing engines all communicate with the horizontal cold-blast tube, whence the air is distributed to the stoves, in which it is raised to a temperature of 1250°, sufficient to give a heat of 1100° at the tuyeres; it is then discharged into the hot-air main, and thence through the tuyeres into the furnaces.

The furnaces are closed at their mouths by a bell and hopper (cup and cone), and the waste gas, instead of as formerly burning at the tunnel-head, is withdrawn by the vertical tubes to an underground brick culvert, from which branches run to the hot-air stoves and to the boilers. Just before adding a fresh charge of materials the temperature of the gas is upwards of 600°, and descends nearly to 300° when the charge has been introduced. As, temperatures of gases taken at top of No. 6 furnace;—

11.0 A.M. 315°, charge just lowered.
11.15 „ 436°
11.30 „ 634°
11.40 „ 335°, charging furnace

The combustion of this gas heats the stoves and raises steam in the boilers, so that no coal is consumed for either of these purposes, except in cases of stoppage. The entire consumption of coal in twenty-six weeks, exclusive of that used in first lighting up and in calcining, has been 190 tons, or $7\frac{1}{3}$ tons a week.

The number of men employed about the two furnaces in twenty-four hours, exclusive of mechanics for repairs and platelayers, but including enginemen for removing the slag, is seventy-seven—fifty-two in the daytime, and twenty-five at night; being one man for every 11 tons of materials of every kind, including slag, transported; or one man for every $1\frac{1}{10}$ ton of pig iron produced.

A weighing machine is placed at the entrance of the works, for weighing the raw materials as they arrive. The pig iron is weighed on leaving the works, along with that of the other furnaces, at a point which is not included in the plan.

Commencing at the point where the raw material enters the works, the first operation, as before stated, is to lift it to the level of the kiln-gantry, or stage. The average weight of a loaded truck is about 14 tons, and the trucks are lifted 40 ft. The hoist for effecting this operation is shown in Fig. 4239. It consists of a steam-cylinder A, supported on columns, furnished with a piston and piston-rod, to the lower end of which is attached the cross-head of the cage B. The loaded trucks are allowed to enter the cage by a gentle descent. The steam is then admitted to the under side of the piston, and the load is lifted by the upward pressure of the steam to the higher level. The diameter of the steam-cylinder is 38 in., and its length is of course equal to that of the lift. As will be noticed, the cylinder is built in sections and bolted together with flanges, each flange being faced with a rebate so as to secure an accurate fit. There is no difficulty in boring out all the sections perfectly parallel. When the truck is removed at the top, the cage is made to descend again by exhausting the steam. This, however, is not allowed to take place directly into the air, but through the pipe C to the upper side of the piston. The latter is thus kept warm by being at all times filled with steam; any entrance of air being prevented by the valve D, which opens outwards. The actual exhaust takes place during the next upward stroke, when the steam on the upper side of the piston is pushed, along with any condensed water, through the valve D, after which it passes by the pipe E to the cooling reservoir, joining the waste tuyere-water in its way, so that the steam is entirely condensed. It will be perceived that this form of hoist precludes the possibility of economizing to any great extent by expansion. Its great simplicity, however, as well as its effectiveness and perfect ease in manipulation, are advantages which outweigh other considerations.

The truck of raw material having been thus lifted, and having discharged its load into the kilns or bunkers, as the case may be, is passed on to the other end of the gantry, and lowered again to the ground level by the drop shown in plan, Fig. 4238. This drop may be briefly described as a friction-brake apparatus, supported on cast-iron columns. A platform, suspended by wire ropes which pass round pulleys, is keyed on to the same shaft as the brake wheels. The pulleys are provided with counterbalance weights, which outweigh the platform, and thus tend to keep it always at the top. When an empty truck is pushed on to the platform the balance is destroyed, and the truck is allowed to descend gently by means of the brake handle.

All the raw materials having been lifted, as described, the ironstone, along with the limestone and small coal, is tipped into the kilns, and the coke into the boxes. These latter are constructed of wood, and are two in number; each capable of containing 250 tons of coke. The flooring of each box is about 6 ft. from the ground, and is provided with four sliding doors, through which

the coke is shot into barrows as it is required. Besides these coke-boxes, there is also an additional box next to the lift for storing small coal for the use of the kilns. The flooring of this box is high enough to admit a railway wagon underneath, so that, should the daily supply of small coal fall short, the kilns may be replenished from this source with the least amount of labour.

The kilns are five in number, and sections of one of them are shown in Figs. 4240, 4241. It consists of an outer cylindrical shell of wrought iron, varying in thickness from $\frac{3}{8}$ of an inch at the bottom to $\frac{1}{4}$ of an inch at the top, and an inner lining of fire-brick, 12 in. thick. The interior diameter of the kiln is 26 ft., and it is tapered inwards at the bottom. There is also a central cast-iron cone, with its apex upward; the object of which is to hold up the charge and at the same time guide it conveniently towards the openings, out of which it is ultimately drawn. Each kiln has eight of these openings ranged round its circumference; and they serve both for drawing the charge as it comes down calcined, and for admitting the air for combustion in calcining. The capacity of each kiln is 15,800 cub. ft., representing

4239.

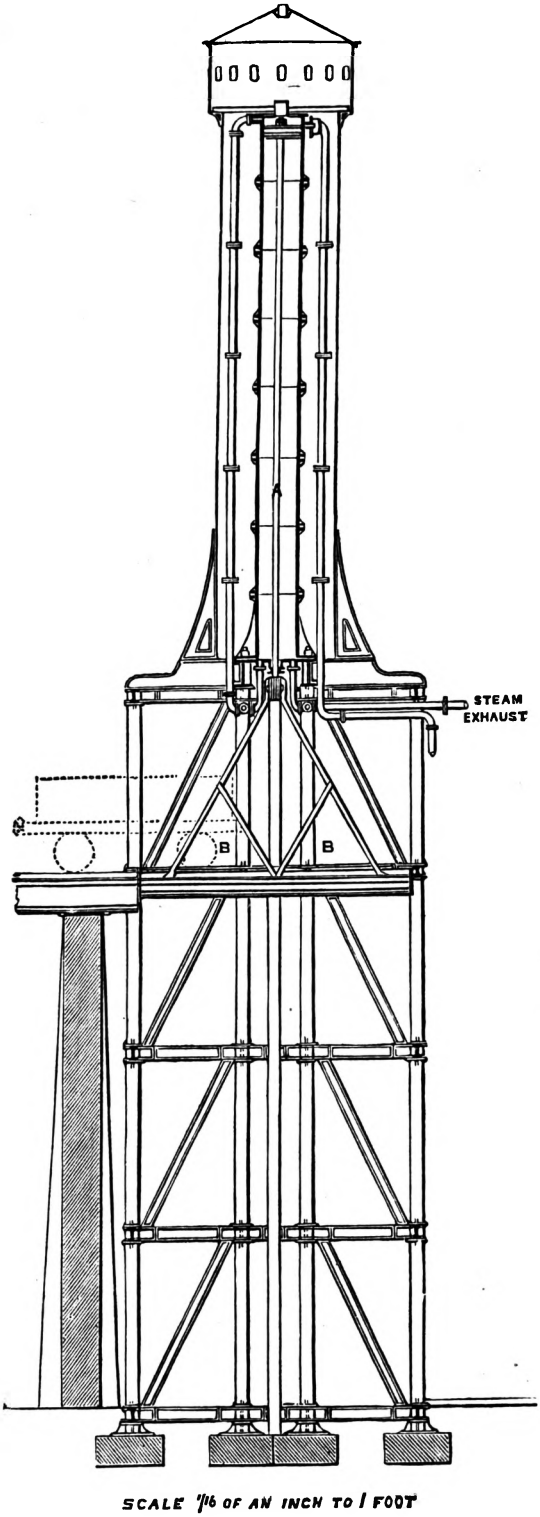

SCALE 1/16 OF AN INCH TO 1 FOOT

4240.

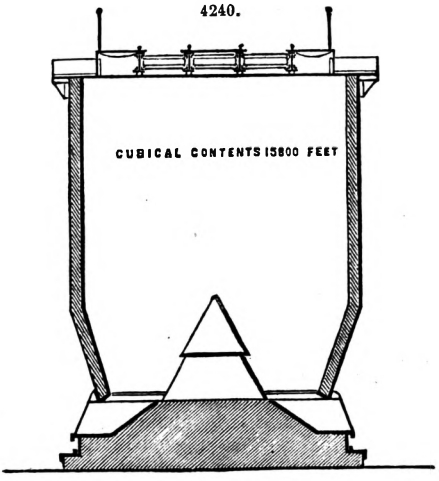

4241.

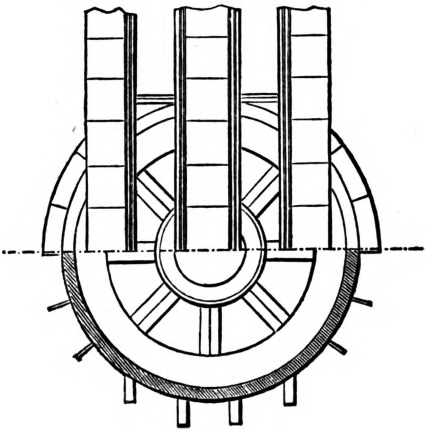

630 tons of mixed materials. In these works, although not always the case elsewhere, the limestone is tipped into the kilns along with the ironstone, by which means it is thoroughly dried and semi-calcined.

The next process is to remove the materials to the furnaces. Each barrow, for this purpose

when filled, is passed over a small weighing machine, and is then wheeled on to the cage of the furnace-hoist. The entire lift to the charging platform of the furnaces is 92 ft., and the construction of the hoist is shown in Fig. 4242. In this case, the moving power, instead of being below as usually arranged, is placed overhead, and consists of a double-cylinder engine, with valves worked by link-motions. The diameter of the cylinders is 8 in., and the length of stroke 12 in. On the crank-shaft are two pinions working into two wheels on an intermediate shaft. At the middle of the latter shaft is keyed a larger pinion, gearing into the main spur-wheel A, which is 12 ft. in diameter. Each side of this spur-wheel is flanked by a grooved pulley, carrying a steel rope $1\frac{1}{4}$ in. in diameter. The ropes are made to fit the grooves with exactness, and they only pass half round their respective pulleys, the ends being attached in pairs to the two cages B B. Thus, while one cage is going up, the other is going down; and the work is done entirely by the friction of the ropes in their grooves. In order to secure equal tension on both ropes, the attachment to the cage is by a double lever, similar to a balance-beam, which immediately yields to any unequal stretching of the ropes. The cages are steadied in their ascent and descent by guides attached to the columns C, which support the platform. The average weight raised at each lift is about 2 tons, although much more is capable of being lifted without the ropes slipping. It will be perceived that the moment the descending cage reaches the bottom, the strain on the ropes is relieved, so that they will no longer hold sufficiently in the grooves to enable the ascending cage to rise any higher. It follows that overwinding cannot possibly take place. The length of steam-pipe required for working the engine at this elevation is found unobjectionable in practice. The entire length of pipe from the boilers is 200 ft., and it is well covered with non-conducting material. The engines are usually worked at about 150 strokes a minute; and calculating for loading and unloading the cages, they are capable of making one lift a minute; and of thus raising in the hour 120 tons of material.

4242.

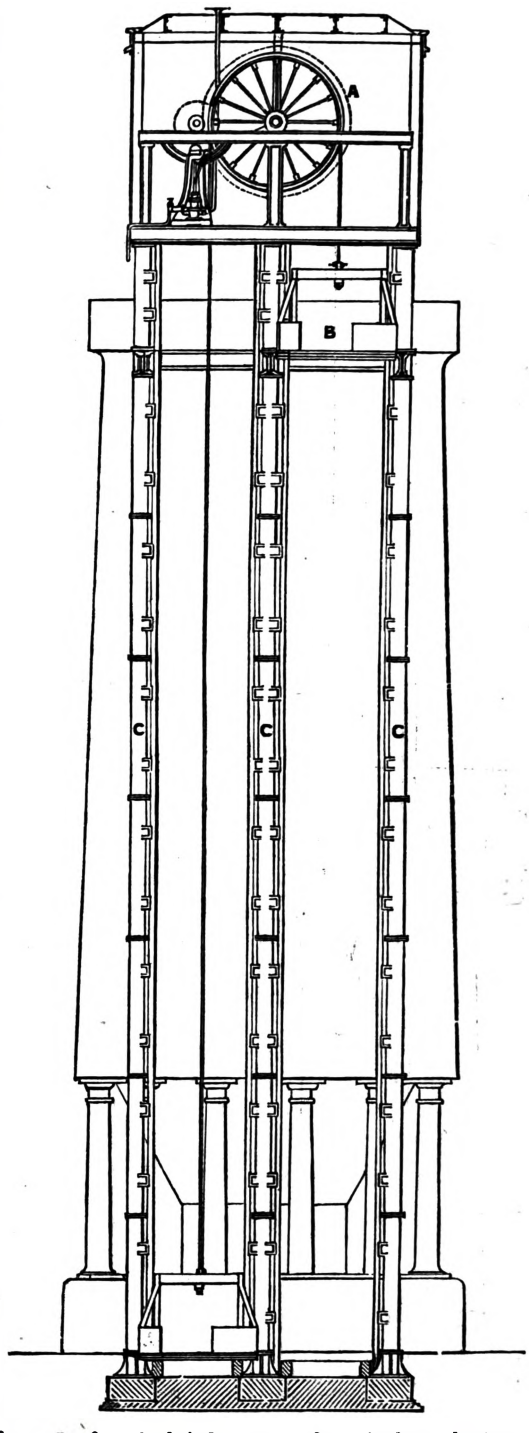

Fig. 4243 is a vertical section of one furnace. The foundation up to the ground level consists entirely of brickwork resting upon clay. From this point a circular base is carried to a height of 7 ft. in solid brickwork, mainly of fire-brick, with a stone curb all round, on which the supporting columns rest. These columns are 18 ft. 6 in. in height, averaging 2 ft. 4 in. in diameter, with a thickness of metal of 2 in. They serve to support the structure from the angle of the bosh upwards, the lower part being carried partly by the wrought-iron conical casing, and partly by the brickwork and stanchions which surround the hearth. The whole of the furnace from the tuyeres upwards is cased with wrought-iron plates, those of the lower or conical part being $\frac{1}{2}$ in. thick, while those of the barrel vary from $\frac{7}{16}$ of an inch below to $\frac{3}{8}$ of an inch at the top. The interior of the furnace is lined throughout with fire-brick lumps 5 in. thick, and of dimensions varying with the internal diameter, no two courses being alike. The backing between the inner lining and the shell is of ordinary fire-brick. Up to a short distance above the tuyeres every fire lump is chisel-dressed on both beds and joints, and the same is also the case with the hearth lumps, which consist of two courses set on edge and breaking joint; the lower course being 18 in. deep and the upper one 3 ft. The following are the principal dimensions of the furnace;—

Diameter of the hearth, 8 ft.; depth at tuyere, 3 ft. 6 in. Diameter at the bosh, 28 ft. Diameter of the bell-opening, 13 ft. Total height from the hearth to the platform, 85 ft. The cubical capacity is 30,085 cub. ft. There are four tuyeres, Fig. 4244, each with a muzzle 6 in. in diameter, and

4243.

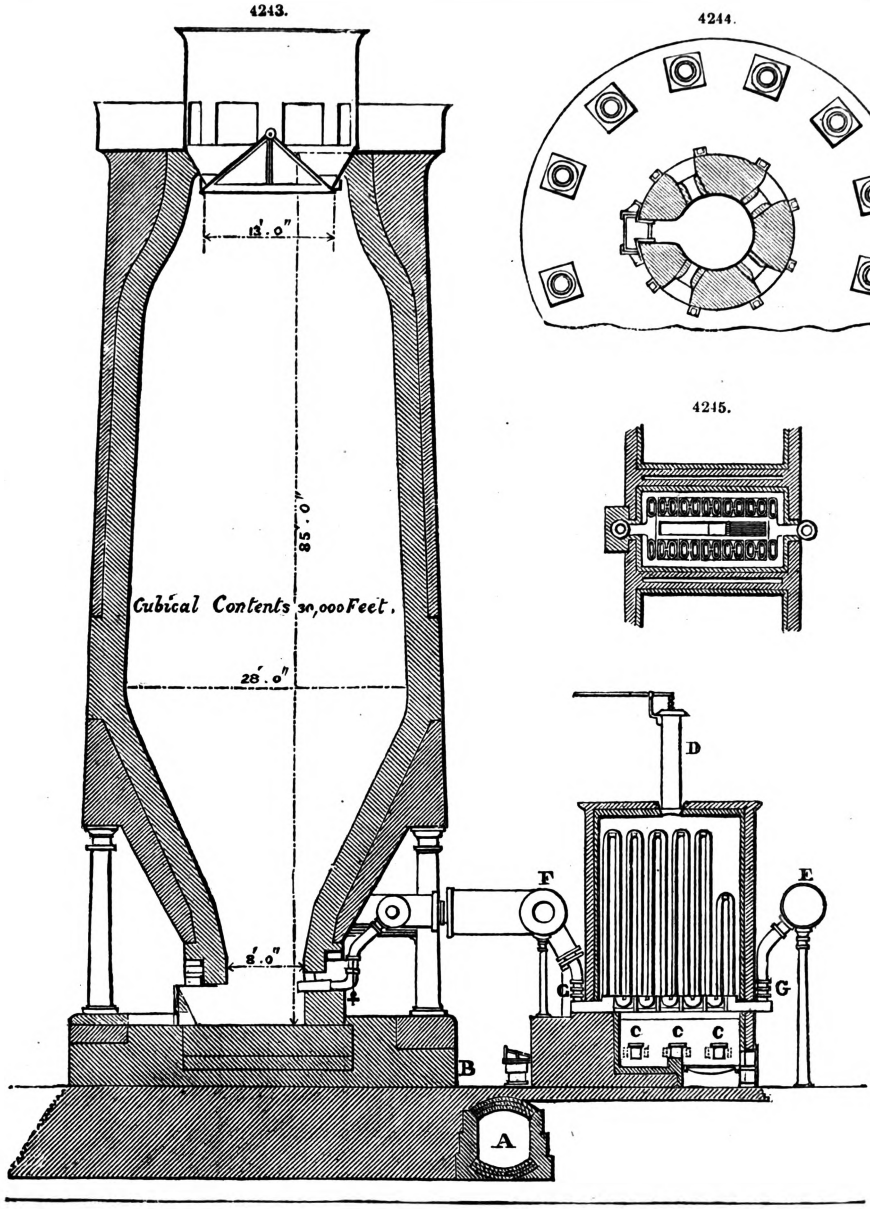

4244.

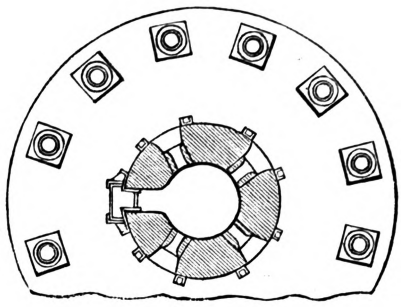

4245.

the dam-opening is 2 ft. wide. The pig-beds are necessarily of large dimensions, being capable of holding 1200 moulds for each furnace. The slag-boxes are eight in number, and large enough to contain upwards of 3 tons of slag each.

The construction of bell and hopper for charging the furnace is shown in Fig. 4246. It consists of a bell suspended from a lever, having at its opposite end a counterbalance weight sufficient to keep it closed when not loaded with the charge of materials. The lever is connected to a piston in a small cylinder filled with water, having a passage by which the water can flow from one end of the cylinder to the other. So long as this passage remains closed the whole apparatus is immovable. Six barrow loads of material are tipped into the hopper, and rest upon the bell. A catch is now released, and opens the passage between the top and bottom of the cylinder. The lever is no longer held by the piston, which is able to move upwards in the cylinder. The weight of the bell and charge together overcomes the counterweight; they descend, and the materials fall into the furnace. As soon as they are clear of the bell, the counterweight preponderates, the bell rises again, closing the furnace, whilst the piston descends and forces the water back through the passage from the bottom to the top of the cylinder. The passage is then closed, and the apparatus

is ready for the next charge. This form of lowering apparatus is the invention of Mr. Wrightson, of the firm of Head, Wrightson, and Co., Stockton.

In each furnace, the average consumption of air, of the density of the atmosphere, is about

4246.

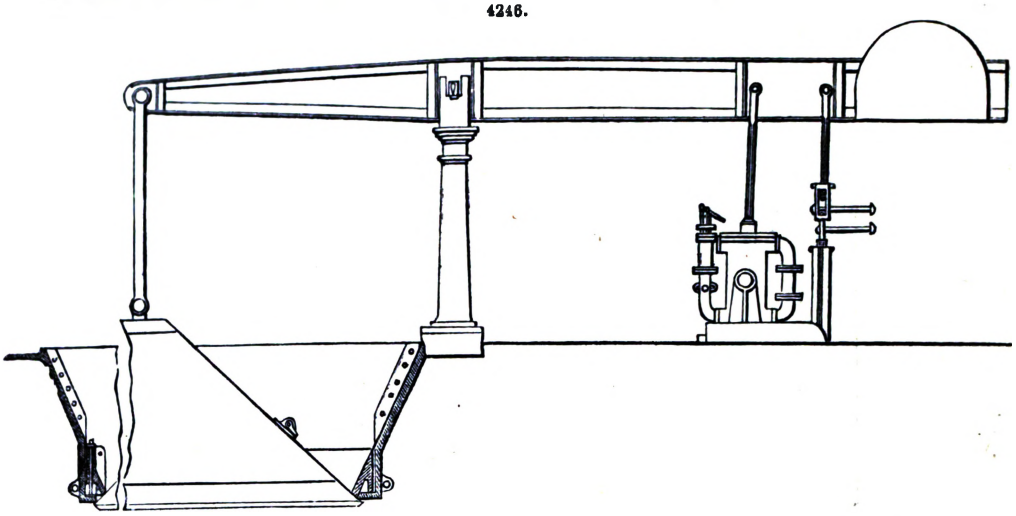

8000 cub. ft. a minute, but it leaves the blast cylinders at a pressure of 4·5 lbs. on the square inch above the atmosphere. This pressure is reduced to 4·25 lbs. by passing through the heating stoves, and finally to 3·75 lbs., by the time it reaches the tuyere most distant from the blowing cylinders.

The charge gradually descends to the zone of fusion, whilst the gaseous products of combustion, sufficiently charged with carbonic oxide to be themselves combustible on coming into contact with air, ascend. The top of the furnace being closed, the gas escapes through an opening at the side and descends the wrought-iron main or down comer, which is 6 ft. 6 in. in diameter, into an underground brick culvert. This culvert traverses the entire length of the stoves and boilers, each of which is furnished with a branch-flue and valve, so that each may obtain its share of gas according to its requirements.

The stoves for heating the blast consist of nine sections for each furnace, eight being always in action at one time, while one in rotation is allowed to cool for the purpose of cleaning. Figs. 4243, 4245, show the interior of one section. The gas is introduced by the valve B into the lower chamber, where it meets the air which enters by the openings C C. The gas and air being here thoroughly mixed, the flame arising from combustion plays among the cast-iron pipes, and issues by the chimney D. The blast enters the pipes from the cold-blast main E on the right, passing up and down until it reaches the hot-blast main F on the left. The latter is lined with

4247

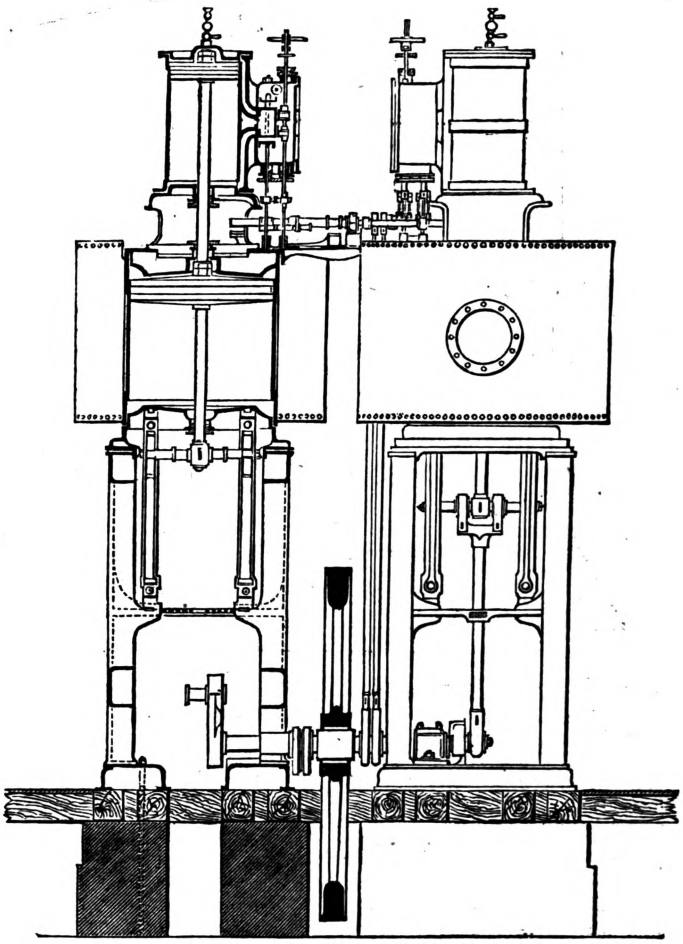

brickwork 14 in. thick in order to prevent radiation, and from it the air is distributed to the various tuyeres by the shortest possible route, every precaution being taken to prevent loss of heat by surface cooling. The heating pipes are ∩-shaped in elevation, and oblong in cross-section, as shown in plan. There are two rows in each section, six in a row, and they lean against each other at the crowns in order to force the flame to circulate between and at the back of them. The total internal heating surface of all the sections for one furnace is about 10,000 sq. ft. In addition to the gas-valve each section is furnished with blast-valves G G, both on the hot and cold sides, so that it can be entirely isolated from the rest at a moment's notice.

4248.

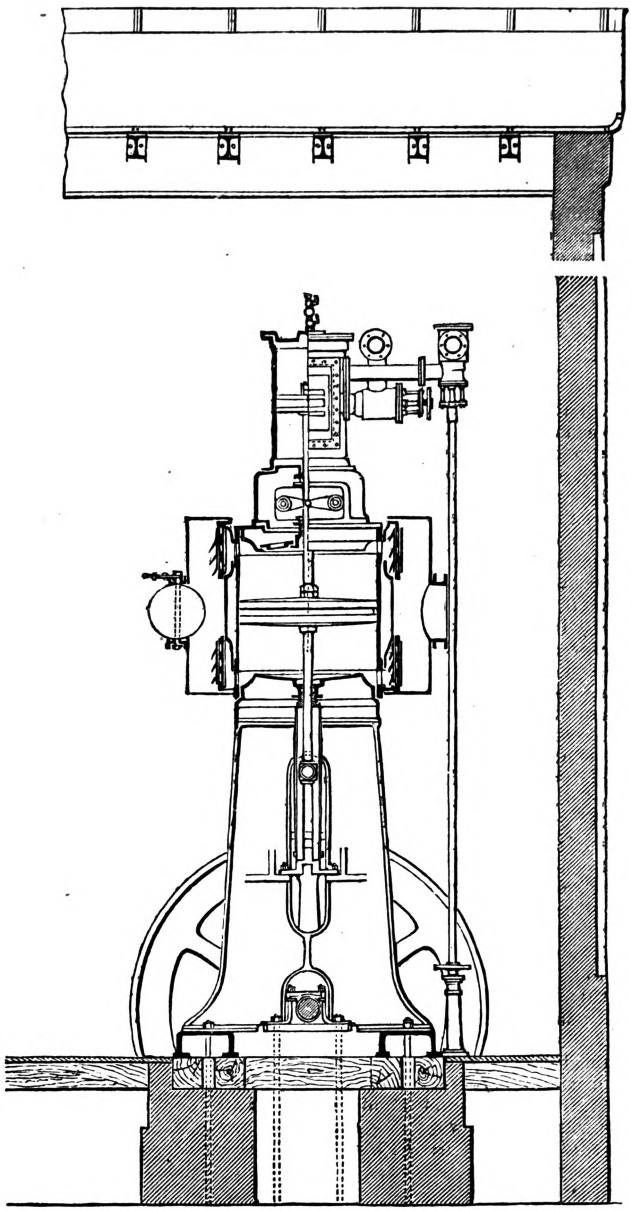

The cold-blast main, as will be seen in the plan, Fig. 4238, takes its commencement at the back of the engine-house, there being a branch furnished with a valve from each blowing cylinder.

The blowing engines are of the vertical construction, which has become so general in the Middlesborough district. They are four in number, but coupled in pairs, each pair having a fly-wheel between them, with cranks at right angles, Figs. 4247, 4248. The object of this arrangement is to give facility for carrying out the principle of expansion to a greater extent than is usually done. The resistance being direct and constant, there is in a single engine a difficulty in turning the centre under a high degree of expansion, and consequently of varying pressure, except with an unusually heavy fly-wheel. When a pair of engines is coupled, as in this case, the power throughout the stroke is equalized so as to admit of a higher degree of expansion. The steam is cut off by an additional eccentric working two plates on the back of the ordinary valve, and the grade of expansion can be altered without stopping the engines by turning the wheel at the top, which acts on right and left handed screws, so as to cause the plates to approach or recede from one another, and thus cut off the steam at any point desired. The diameter of the steam-cylinders in these engines is 32 in., and of the blowing cylinders 66 in., with a stroke of 4 ft. in both cases. The pressure of the steam at the gauge is 55 lbs., and of the blast 4½ lbs.; the speed, 24 revolutions a minute. The steam is cut off after the piston has moved through a fourth of its stroke. Under these conditions the blast is sufficient for the production of about 950 tons of pig iron a week. The engines are sufficiently strong in all their parts to admit of a much greater speed of piston, and by working less expansively will develop power sufficient to blow an additional furnace.

The boilers for supplying the steam to these engines are eight in number, but there are never more than seven working at one time, every boiler being taken off for cleaning, in rotation, after it has been in work fourteen days. The diameter of the outer shell of each boiler is 5 ft. 6 in., and of the flue 2 ft. 9 in.; its length is 35 ft. The boilers are suspended by means of saddles, which span the top. They do not derive any support from brickwork underneath. In front of each boiler is a combustion-chamber made of fire-brick, and into this the gas is first admitted from the gas culvert by valves, the air being allowed to meet it by a concentric perforated pipe fitted with a regulator. The water for feeding the boilers is heated by the exhaust steam to about 200°, and the

feed is effected by two donkey-pumps, each having two plungers 4 in. in diameter; one pump being sufficient to do the work in case the other requires repair. The burning gas, on leaving the combustion-chamber, passes through a tubular flue and returns underneath the boiler to the front end, and thence by the smoke flue to the chimney.

The feed-pumps are situated in the small building attached to the engine-house; and here also are placed the tuyere-pumps, of which there are two, each with double plungers 10 in. in diameter. They draw water from the well, and pump it into the tank which forms the roof of the engine-house. From this tank the water distributes itself by gravitation to the various tuyeres, and then returns to the cooling reservoir, and from this again to the well, thus keeping up a constant circulation. The waste from evaporation and other causes is replenished from the water mains with which the town of Middlesborough is supplied. The time occupied in the construction of the works was fifteen months.

For working the traffic of these furnaces, and removing the slag, two locomotives are required. The former has cylinders 12 in. in diameter, with a stroke of 16 in.; the latter has cylinders 9 in. in diameter, and a stroke of 12 in. As the traction is occasionally heavy, the wheels of the smaller engine are small (2 ft. 6 in. in diameter), and the tread is short (5 ft.), in order to enable it to turn round curves of small radius. Locomotives employed for this purpose, not requiring great speed, have been usually geared after the manner of traction engines; but the new construction is found to do better, and without the same liability to get out of order.

A self-coking blast furnace, Figs. 4249 to 4252, of peculiar construction, has recently been erected by William Ferrie at the Monkland Iron-works. The fuel is charged in the raw state, under an ordinary bell and cone appliance. The height of the furnace is 83 ft., diameter at bosh 18 ft., and width at the top 12½ ft. The top is closed by the bell and cone, and the gases are led to heaters in the usual way. The upper part of the furnace, below the space required for bell and cone, and terminating 20 ft. lower down, is divided into four compartments or retorts by vertical walls, supported on arches and radiating from the centre. These vertical walls, and also the circumferential walls, are pierced with flues, through which a portion of the gases, taken from the top, are led as far down the interior of the furnace as the bottom of the retorts. The gas so conducted, after being mixed with the necessary quantity of atmospheric air, which is admitted by means of gratings placed round the outer stem of the furnace, is ignited and passes up through and around the flues, and is assisted in its passage by stalks attached to top of furnace. The brickwork on each side of vertical walls is 9 in. thick, and that between inside of retorts and flues in circumferential walls is also 9 in. The temperature in all the flues will range from 1500° to 1700° Fahr. The heat in brickwork forming the flues is a bright red, which passing through the 9-in. walls, and combining with the ascending heat from the lower part of the furnace, completely cokes the coal in its passage down the four retorts or compartments, and at the same time, and in the same way, it raises the temperature of the ores and flux to the same degree. In proof that the materials are at the temperature stated, a hole was drilled, at the request of I. Lowthian Bell, through the wall of the furnace at point A on Fig. 4249, about a level with the spring of the arches on which the retorts partially rested. The burden as seen through this opening was at a bright red heat, and the temperature, taken by means of Siemens' pyrometer, 6 in. from inside of lining, was at one reading 1434°, and at another 1554°. The gases passing out of this opening were of a pale blue colour, indicating that the fuel at that zone had parted with its principal gaseous components, and was in a state of coke.

The results obtained from this furnace have been most satisfactory, in regard to not only effecting a saving of coal and ores, but in superior quality of iron produced. In the Lanarkshire district, the quantity of coal required in the manufacture of a ton of No. 1 pig iron ranges from 50 to 52 cwt. in the furnace, whereas in this furnace a ton of the same quality can be produced with 32 to 36 cwt., effecting a saving of nearly a ton of fuel to the ton of iron made. In ores, the saving in this furnace will be about 2½ cwt. the ton of iron. One explanation of this saving in ores, writes William Ferrie, in the Journal of the Iron and Steel Institute, is, that they break into powder a few feet down the furnace, and are blown out at the furnace top, as is the case with coal, where no less than 81·54 per cent. of its available properties, in the process of smelting, escape as waste at the furnace top.

I. Lowthian Bell, the eminent and scientific ironmaster, states that practically in the blast furnace the whole of the work is done, not by raw coal, but by coke, and the advantage of using raw coal instead of coked coal is, that the loss of carbon which takes place in the ordinary coking oven is entirely saved in the blast furnace when coal is used. There is also a small saving of the wages and labour connected with coking the coal, and also a very large production of gas. Bell considers that the economy resulting by the use of Ferrie's furnace is due to its height alone, but it is fair to state that Ferrie's explanation is held by many ironmasters of eminence.

Hot Blast.—The first idea of heating the blast, prior to its entrance through the tuyeres into the furnace, is due to J. B. Neilson, of Glasgow; who also has the merit of its first practical application early in the year 1829. Previous to that period, observes Henry Martin, in an interesting paper read before the Inst. of Mechanical Engineers, the settled and firm conviction of ironmasters appears to have been that the colder the blast the better the quality and the larger the quantity of iron produced from each furnace in a given time. This conviction was the result of long-continued observations, which showed that the produce of each furnace was always more in winter than in summer; and as the difference most appreciable to the furnace managers between the one state of circumstances and the other was the temperature of the atmosphere, this without further investigation was at once charged as the sole cause. Subsequent research, however, has shown that the mere variation of temperature in the atmosphere from freezing-point to summer-heat had nothing to do with this result, which is owing to a cause still as actively in operation and as sensibly felt with the blast heated to a temperature of 600° or 800° Fahr., namely, the excess of moisture, in the shape of invisible vapour, contained in the air in the warm weather as

4249.

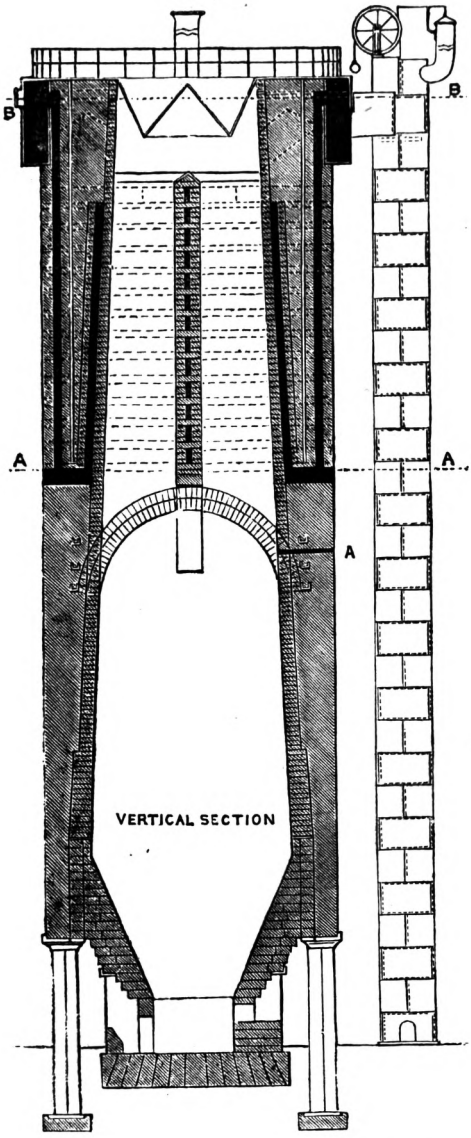

4250

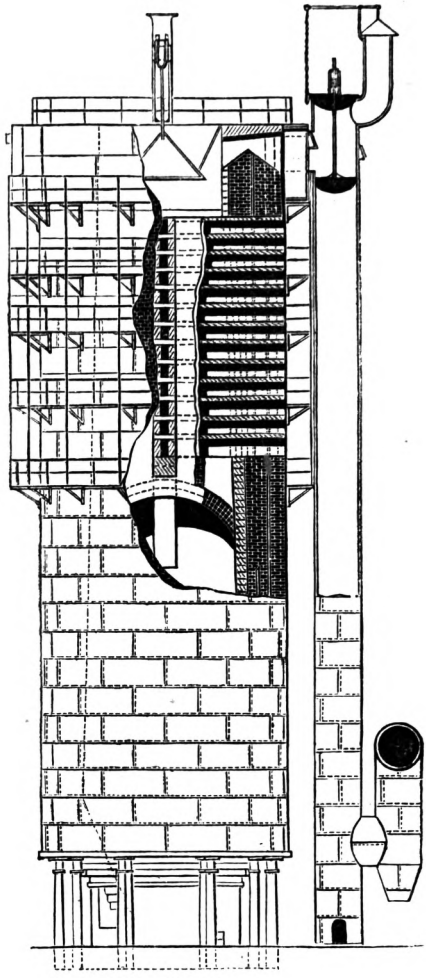

4251.

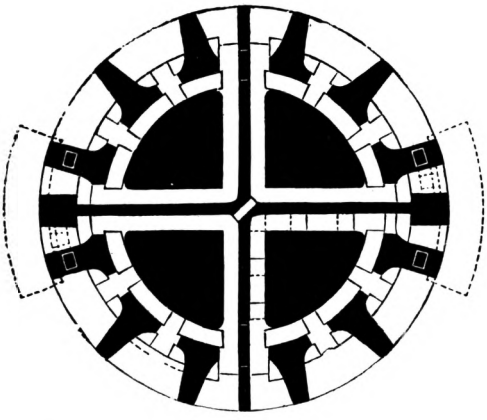

LAN AT AA

4252.

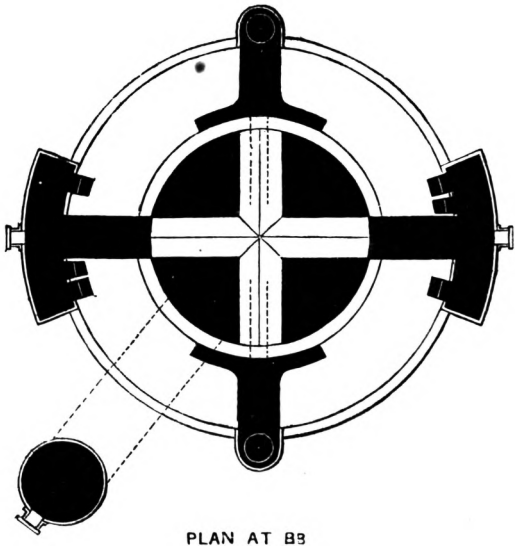

PLAN AT BB

compared with the cold. So strongly rooted, however, was the belief that the temperature was the only circumstance affecting the make of iron, that the greatest efforts were made in summer to obtain the blast as cool as possible; amongst other plans, by passing it over cold water, with a result of course contrary to expectation, owing to a partial absorption of the water.

After many experiments with the original apparatus, which, whilst proving the correctness of his ideas, was found mechanically to be very defective, Neilson introduced in 1832, at the Clyde Iron-works, the cast-iron tubular stove, Figs. 4253, 4254. An oven or stove with one grate was constructed behind each of the tuyeres, tuyere A being inserted at the back of the furnace, in addition to the two, one on each side, which were used before the introduction of hot blast. The blast was admitted into a main pipe C running longitudinally at one side of the grate B: on the top of this main pipe a number of deep circular sockets were cast with apertures into the pipe, and on the opposite side of the grate a similar main pipe D was fixed with corresponding sockets and apertures, which was connected with the tuyere-pipe inserted into the furnace. The two longitudinal main pipes C and D on each side of the grate were then connected by cast-iron tubes E, each forming a semicircular arch of 6 ft. span, fastened into the sockets with well-rammed iron cement. The cold blast was supplied to each of the ovens by a branch pipe taken direct off the large main from the blast-engine, and entered the oven at the end farthest from the grate; it then passed through the arched tubes E over the fire into the pipe D on the other side of the grate, and thence to the tuyere, leaving the oven at the end next the grate. Whilst the blast was traversing the two longitudinal pipes and the arched connecting tubes, it received the direct heat from the grate, and was raised by this means to a temperature of 600° Fahr. The whole of the apparatus was enclosed in an arched oven, so as to retain and reverberate as much heat as possible. The general dimensions of the apparatus for each tuyere were;—Diameter of longitudinal mains at each side of grate, 12 in., length of ditto, 10 ft., distance between ditto, centre to centre, 6 ft.; number of arched connecting tubes, 9; internal diameter of ditto, 4 in.; external diameter of ditto, 7 in.; height from grate to under side of arched tubes, 4 ft. 4 in.; area of heating surface a tuyere, 150 sq. ft.; area of fire-grate a tuyere, 15 sq. ft.

4253.

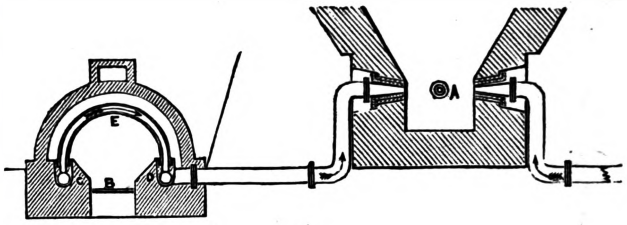

4254.

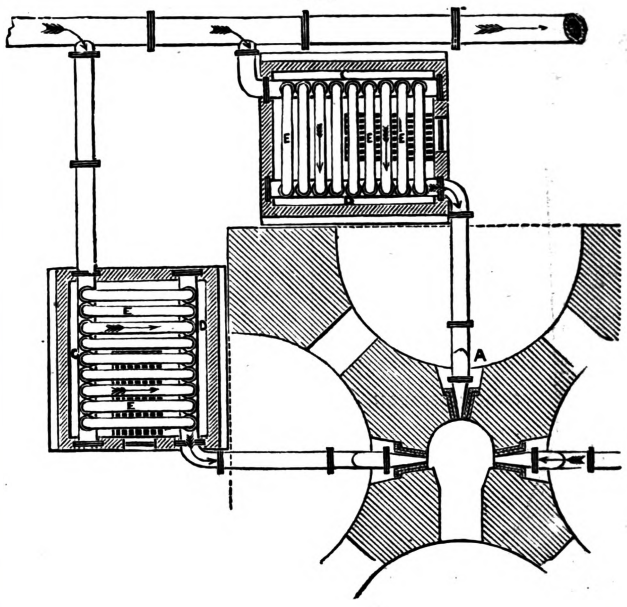

Figs. 4255, 4256, are of Martin Baldwin's hot-blast ovens. From 1832 to 1851 numerous modifications of Neilson's plans were used with varying success, but they all had defects which prevented their final adoption. Bearing in mind these defects, Martin Baldwin in 1851 directed his efforts—1st, to the construction of a main of such a form that its expansion or contraction should in no way tend to disturb the socket-joints of the upright pipes; 2nd, to the construction of upright pipes that should have all the expansion they required without tending to disturb the socket-joints or to break or burn down; 3rd, to the construction of a form of casing which, whilst it gave a good fire-grate area, should be compact and as far as possible reverberatory, so as to throw back the heat on to the pipes and present as little surface as possible for its abstraction from the oven. It will be seen from the plan, Fig. 4256, that the form of main designed was well adapted for the purposes in view; being circular or annular in plan, cast in two semicircular portions, with a longitudinal diaphragm through the centre dividing each portion into two compartments: on the upper side of each semicircular portion twenty-four socket-holes were cast, twelve in each compartment, making forty-eight total. In the middle of the outer compartment of each main, between the sixth and seventh socket-holes, a stop S was cast; and at either end of the main an inlet and outlet branch was cast on, communicating with the outer compartment. The two mains being placed on a brick foundation with fire-grates below formed a complete circular main, ready for the insertion of the upright pipes. These consisted each of two straight pipes about 11 ft. long, cast together, with spigot ends at the bottom fitting into the sockets on the main, and closed at the top with the exception of a lateral opening to permit one side of the pipe to communicate with the other. Each pipe was

4 in. inside diameter and 1½ in. thick. Twenty-four of these pipes were fixed in the sockets on the mains, the joints well rammed with iron cement; and a circular casing of masonry lined with fire-brick was erected round them, and surmounted with an arched dome and stack. The cold blast, entering at the same end of each main through the inlet-pipes placed side by side, traversed first the outside compartment of the mains as far as the stop S; and then passing up the outer portion of the first six pipes and down the side next the fire, it arrived at the inner compartment of the mains, from which it passed up the inner sides of the next six pipes and down their outer sides into the outer compartment of the mains beyond the stop, and thence issued through the outlet branches at the hot ends of the mains.

4255.

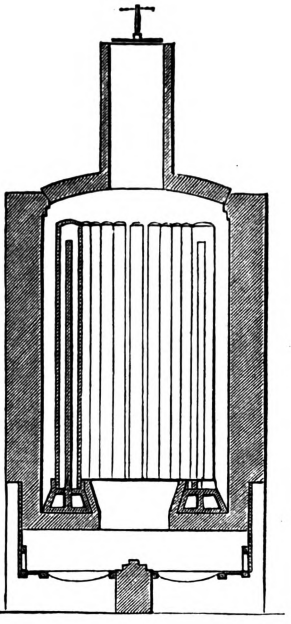

4257.

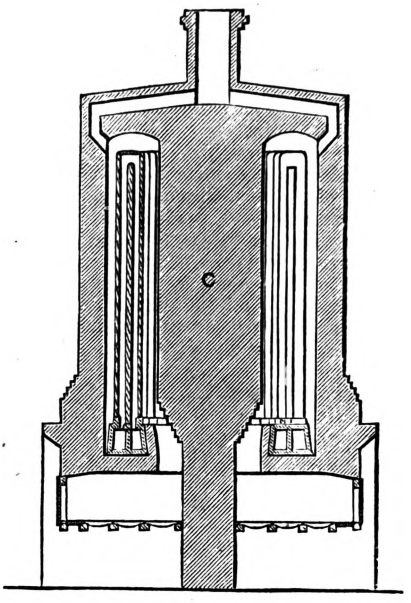

4256.

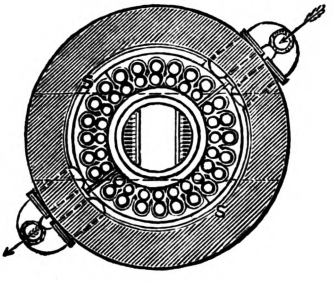

4258.

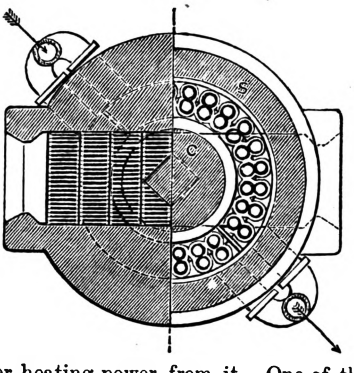

This oven was found to give a satisfactory heat, though not superior to that obtained with some of the other descriptions of ovens; but in freedom from fracture or leakage of joints it was soon found to be very greatly superior to many others.

In consequence of its freedom from fracture or leakage, attempts were early made to improve the mode of setting of this round oven, so as to obtain a larger heating power from it. One of the first defects observed was the position of the stack-flue directly over the fire-grate, by which arrangement a large amount of the column of heated flame and gases, instead of being distributed amongst and about the pipes, passed direct out at the stack without coming in contact with them. To obviate this difficulty, in the next oven erected the hole through the brick dome at the top communicating with the stack was built up, and the flues distributed round the outside casing of the oven at the top, so as to create a draught from the grate to the back of the pipes all round. This was found to be a considerable improvement, but was to some extent counteracted by the casing of the oven being set back 14 or 15 in. from the pipes, in order to allow of back flues being taken under the mains from the grate, that some heat might ascend at the back as well as the front of the pipes; by this means a considerable amount of the reverberatory effect of the casing on the pipes was lost. It will be seen also that in the first form of round oven, Figs. 4253, 4254, a fire-door was placed at both the cold and hot ends of the grate: this was found to be very detrimental, especially in a high wind, as the comparatively free draught playing under the grate frequently blew the fire out at one door when blowing full in at the other, interfering seriously with the proper draught up the oven. These various defects were remedied by a different mode of setting: the second fire-door was done away with, and the ash-hole blocked up at that side; the brickwork was retained, as at first, close to the pipes, with only about 4 in. space; and the top flues were placed round the outside of the casing, so as to distribute the heat as much as possible among the pipes, with considerable advantage in the increased heating power of the oven.

Figs. 4257, 4258, show a further improvement of the round oven, representing one constructed in 1857, with an internal core C, at Henry Martin's suggestion, for Halloway's iron-works in the Forest of Dean. This arrangement has been found to be a valuable improvement, increasing the heating capacity of the round oven to the extent of one-third with a smaller consumption of fuel The advantages of a core consist in affording a greater amount of reverberatory surface; in

making the temperature more uniform by absorbing any excess of heat, and giving it out again on any diminution of temperature; and in occupying the large vacant space in the centre of the oven, thereby compelling a much larger amount of the heated gases to come into contact with the pipes. The area of fire-grate in this oven is 38 sq. ft., and the area of direct heating surface in the pipes 850 sq. ft. or 280 sq. ft. a tuyere for three tuyeres; it is capable of heating the blast for three tuyeres to a temperature of about 800° Fahr.

Shortly before this last form of round oven was erected, Josiah Smith, of Dudley, who had paid great attention to the subject, and to whom in a great measure the previous improvements in the setting of the round oven were due, finding that he required rather more heat than one round oven would afford, and not wishing to go to the expense of erecting two, devised the plan of elongating the semicircular mains of the round ovens by the addition of a straight length of pipe at the extremities of each, thus forming an oval main and increasing the number of pipes from twenty-four to thirty-two in each oven, and at the same time affording a considerable additional space for the fire-grate. This was found to be so great an improvement on the ordinary round oven, that in the next one constructed the mains were further elongated so as to hold eighteen pipes each, or thirty-six an oven, with a proportionate increase of fire-grate; at the same time a middle partition wall was built between the two mains, the oven was thus divided into two distinct compartments, so that one half could be cleaned out at any time without interfering with the other.

In the next example of oval oven the middle wall was overhung on each side by course over course being gathered over, thus forming a core, which was found to produce the same striking improvement as in the round oven before described. An oven on this construction, with 56 sq. ft. of grate area and 1350 sq. ft. of direct heating surface, was in 1859 heating the blast supplying seven tuyeres to a temperature of 800° Fahr. at Martin's works at the Parkfield Furnaces. Figs. 4259 to 4261 show a further example of this mode of construction in the case of an oval oven with core having forty pipes, erected by Martin in 1858 at Parkfield, in which the area of fire-grate is 54 sq. ft. and the area of direct heating surface in the pipes 1500 sq. ft., or 250 sq. ft. a tuyere for six tuyeres.

4259.

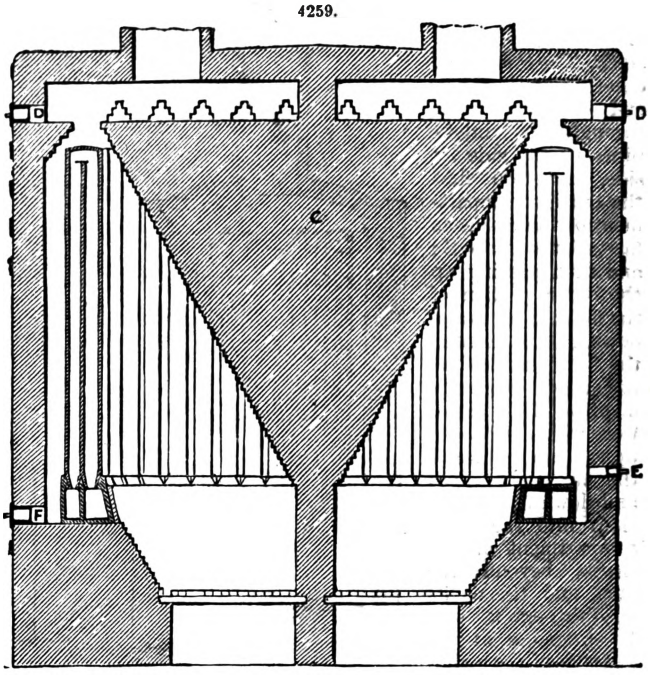

4260.

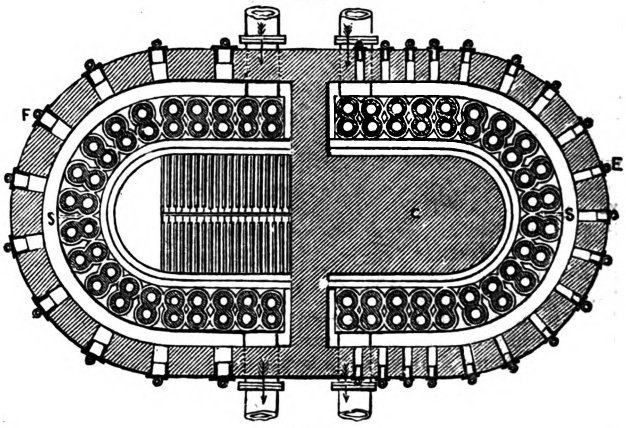

4261.

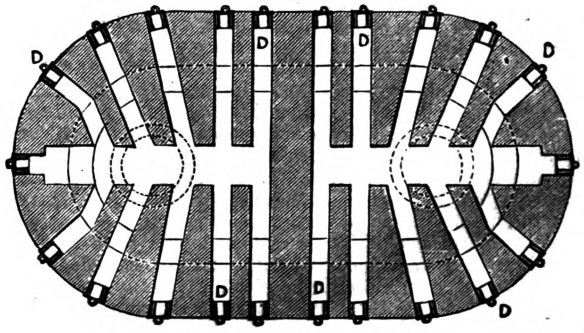

In order to cleanse the oven without having to shut the blast off, small cast-iron box frames with doors have been inserted in the brickwork at D, Figs. 4259, 4261, opposite each of the top flues; by which means access is given to one at a time, and they can be cleaned out all in succes-

sion in a few hours without interfering in any way with the working of the oven. The dust removed in cleaning these flues would to some extent fall down in between the upright pipes and behind the main pipe. To cleanse these parts of the oven, small box frames are inserted at E, Figs. 4259, 4260, opposite each space between the pipes and near the socket-joints, so that all rubbish or dirt which might accumulate between the pipes can be removed; and similar cleansing holes placed behind the main at F enable the process of cleaning to be completed. Though this might be considered a minor point, it is really one of considerable importance in an oven such as that described; for in consequence of the freedom from liability to fracture or leakage, the oven can thus be kept continuously at work for many years without the necessity for the blast being once taken off for cleaning out the oven.

We extract the following particulars relating to improvements in regenerative hot-blast stoves for blast furnaces from a paper read before the Inst. C. E. by Edward Alfred Cowper, in May, 1870;—

In the year 1828 Neilson introduced the plan of heating the air employed as blast in the way we have described, p. 2056; and subsequent improvements have enabled us to obtain with pipe stoves a temperature of 900° and in some few cases 1000° Fahr. The wear and tear, however, with such temperatures of blast are considerable, and great care is requisite in the management of the stoves, or they would soon melt or be destroyed, whenever the current of cold air through the pipes is stopped, as, for instance, at the time of tapping the furnace.

It will be readily understood that, when cast-iron pipes are used for heating the blast, they must be considerably hotter than the air passing through them, or the conduction of heat would be very slow. Then, again, the heat of the fire, or of the products of combustion, must be considerably higher than the pipes, in order that they may be heated with sufficient rapidity to produce the necessary result. There are thus two losses by conduction, besides that through the metal itself, and the natural result is, that the products of combustion generally pass away from the stoves at about 1250°, causing one great loss of heat, besides failing to heat the blast to the desired degree.

4262.

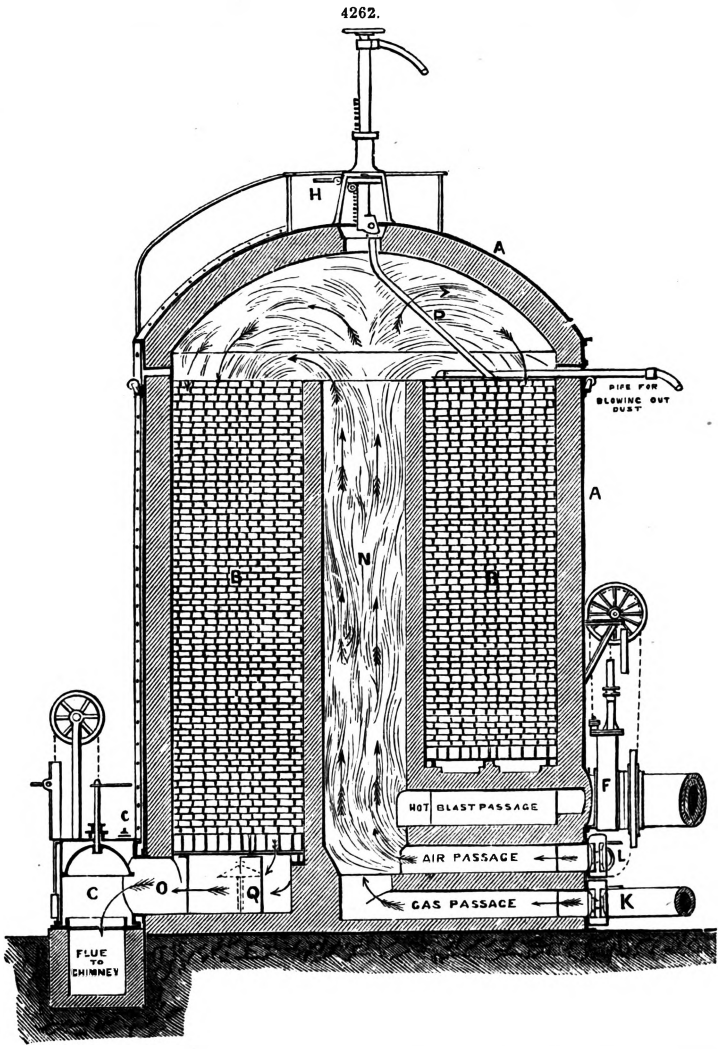

The friction of the air through the pipe stoves, or the reduction in the pressure of the blast, or pillar of blast, as it is commonly termed, is always considerable, and the leakage of air or loss of blast is likewise an item with pipe stoves; and when they get out of repair, from the warping and twisting of the pipes, and consequent straining of the numerous joints, the leakage becomes so considerable that the stoves have to be laid off for some time for heavy repairs. This is such a serious matter that pipe stoves are often worked in a leaky condition, necessitating the expenditure of engine-power for blowing air uselessly, in place of its being utilized in the blast furnace.

The stoves, Figs. 4262, 4263, are based upon the principle of the regenerative furnace introduced by Siemens. Each stove of a pair consists of a wrought-iron cylindrical casing of light boilerwork A A, having a flat bottom standing on the ground and a dome at the top. It is lined with brickwork throughout, and is provided with a circular central

shaft or flue N, which extends to within a few feet of the inside of the brick dome. Around this shaft there are a number of compartments or boxes B B, formed of bricks so placed that those in one course are not exactly coincident in position with those in the courses either above or below, though a passage is left open from the top to the bottom of the mass of brickwork. Thus a new kind of regenerator has been introduced, which is supported on cast-iron gratings at the bottom or cool part of the stove.

The wrought-iron casing A A, Figs. 4262, 4263, is provided with several valves, three being for the admission of cold blast E, of gas K, and of air for combustion L, and two being for the exit of the products of combustion C and of the hot blast F. These valves are all of simple construction except the hot-blast valve F, which has a small circulation of water through it to keep it sufficiently cool, just as the temperature in a tuyere is kept down by a circulation of water around it. This has always answered the purpose very well. The opening and shutting of the valves at intervals of several hours are matters of simple routine, and are in fact all the attention the stoves require beyond an occasional observation to see that the stove has gas enough. There is no fear that these stoves will get too hot, as it is fire-brick that is being heated and not cast-iron pipes. Supposing, then, that a stove has been regularly at work heating blast, and it is wished to heat the stove up again, the first thing to be done is to put another stove on, and then shut the hot and the cold blast valves F and E, and allow the air in the stove to blow out at a small valve *c* to reduce it to atmospheric pressure. The gas, air, and chimney-valves K, L, and C, are then opened, and the gas at once ignites as it enters, and gives a large volume of flame right up the central shaft and over and into the regenerator, thus heating the top course of brickwork considerably, the next course rather less, the next still less, and the lower part of the regenerator not at all, the products of combustion passing away to the chimney at a temperature of about 300°. Then, as the heating goes on, and large quantities of heat are taken up by each course of brickwork, the heat penetrates by degrees lower and lower into the regenerator, until a good red heat has, in the course of several hours, reached nearly to the bottom, thus storing up a large amount of heat in the bricks forming the regenerator. The gas and the air are next shut off; the chimney-valve is also shut, the cold blast is put on, and lastly, the hot-blast valve F is opened. The stove then again does duty in heating blast to full red heat; that is, at a temperature of 1400° to 1500°.

4263.

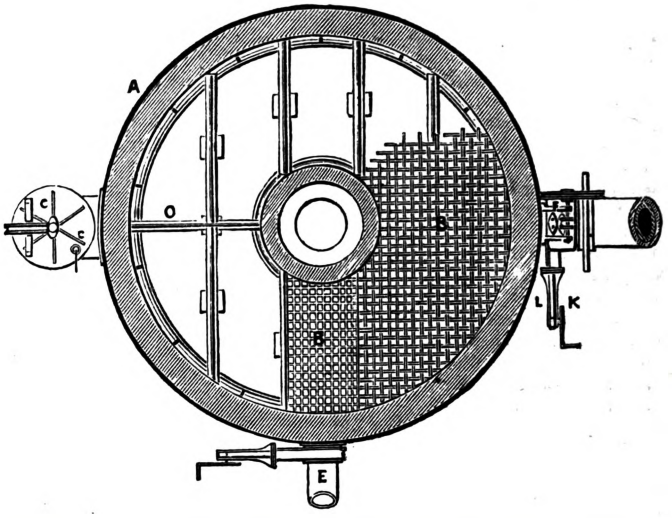

All the hot-blast pipes from the stove to the furnace are of wrought iron and of large size, so as to allow of several rings of brickwork lining to prevent loss of heat.

When Cochrane and Co. adopted the regenerative hot-blast stoves some years ago at their works at Ormesby, it was at first contemplated to use the waste gas from the top of the blast furnace for heating the stoves. On consideration, however, it was thought that the dust mixed with the gas might choke up the regenerators, as they were at that time always filled with chequered work; the bricks being so placed, Fig. 4264, that in every case a brick stood over a narrow slit or passage, though a little above it, thus stopping and splitting the current of air, and effectually

4264.

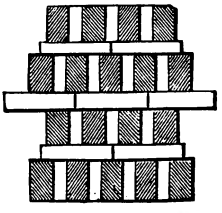

4265.

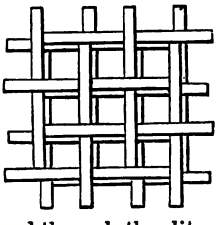

4266.

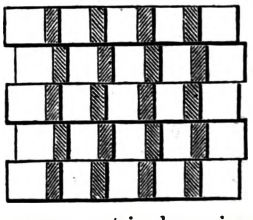

preventing any brush from being passed through the slit. The new arrangement is shown in plan, Fig. 4265, and in section, Fig. 4266. Again, a blast of air or steam through the slit was ineffective for blowing out dust, because there existed free horizontal openings in all directions, by which the force of a blast applied to a slit was at once dispersed and lost.

Cochrane therefore erected Siemens' gas producers, and for some years worked the stoves most successfully with gas so produced, and which contained no dust. After this, they built large brick chambers, with an extensive series of shelves inside, for the purpose of catching the dust entering with the gas from the top of the blast furnace, which was passed through such dust-catchers before

being used in the hot-blast stoves. Now, however, by the use of the later improvements, invented by Siemens, Cochrane, and E. A. Cowper, and embodied in the stoves just described, the cost of such dust-catchers is avoided, and the expense of producing gas is also saved, as the gas is used direct from the top of the blast furnace, and the stoves can be cleaned out with the greatest facility.

The arrangement of blast-pipes, for air or steam under pressure, for cleaning out the dust from each compartment or set of boxes *seriatim*, is shown at P and at Q, Fig. 4262. That at P consists of a wrought-iron pipe jointed to a central pipe capable of revolving by a worm and worm-wheel, so as to bring the pipe over each box in succession, and blow violently down it to clear out all dust. The central pipe has a slight vertical motion given to it each time the pipe P is brought nearer to the centre of the stove. The blast-pipe Q, shown in dotted lines at the bottom part O of the stove, has a small sheet-iron cone or umbrella attached to it, to keep the dust off the workman when he applies the pipe to blow upwards through the boxes. The bottom part of the stove where the cold blast enters is always very cool, and can at any time be made quite cold by running the cold blast through for some time longer than usual, and then a man can enter at the chimney-valve at any time. The construction of the regenerator in compartments or boxes, connected together vertically but not horizontally, gives the power of applying the blast with efficiency, inasmuch as the whole force of the blast is confined to the one passage that is being blown at the time, and admits of a good brush, like a chimney-sweeper's brush, being passed up or down through the boxes to brush out the dust if preferred, the brush being provided with a long-jointed or flexible handle.

The form and proportion of the passages have been found, after numerous experiments, to produce an excellent effect in stirring up and mixing the air passing through, inasmuch as the current is caught by the two contiguous sides of the box that overhang the one below it, and thus is, so to speak, turned over and over, first on one side and then on the other, producing a most intimate mixing of the air, and therefore quick and good conduction of heat from the hot bricks to the air, or *vice versâ*, from the products of combustion to the bricks. It is obvious that the same surfaces that take up the heat are those that again give it out to the blast, so that there is but little loss from bad conduction; and the cold blast is thus heated to a high temperature, and the products of combustion are cooled to a low temperature, in fact nearly exchanging their temperatures, instead of the products of combustion, as in the old cast-iron pipe stoves, going away far hotter than the temperature of the blast that then obtained.

As a rule, a small stick of lead was employed as a test, to ascertain if the blast was hot enough in the pipe stoves, as it would melt the lead if hot enough; then zinc was used in like manner; but with the regenerative stoves antimony is required, and that is cut or melted in three or four seconds. Glass rods are melted easily.

The results obtained by Cochrane and Co. from the adoption of these stoves, as regards the quality of the iron, the increased make of iron, and the large saving of coke in the blast furnace, have been most satisfactory. Hitherto there has only been one drawback to the use of gas direct from the top of the blast furnace, namely, the dust, which has prevented the extensive employment of the regenerative stoves. As that difficulty has now been overcome, many ironmasters are contemplating their immediate use, and several are erected at Barrow-in-Furness of a larger size than any made previously, besides others of a smaller size in other parts of England, in France, and in Germany.

A form of hot-blast stove, Figs. 4267 to 4269, has been introduced and worked successfully at the Consett Iron-works by Thomas Whitwell. It presents in common with Cowper's stoves the advantage of using fire-brick instead of iron in its construction; it is exceedingly durable, stands a temperature of upwards of 1800° without damage, is readily cleaned, and in certain cases effects a considerable saving in fuel to the ton of iron made.

Fig. 4267 is a vertical section of Whitwell's stove. The hot-blast valve A and the cold-blast valve C being closed, the gas-valve B is opened, through which the gas enters the stove, traverses up and down the spaces between the upright walls, and enters the chimney-flue by the valve D. Heated air is supplied to the gas by means of the air-valves *a* and *c* and passages *b* and *d*, by which an intense combustion is secured. The chimney-valve D and gas-valve B being closed, and the hot-blast valve A being opened, the cold blast is admitted through the cold-blast valve C, and issues from the stove by the valve A *red hot;* all other valves being closed perfectly tight. When it is required to clean a stove, the top cleaning doors E are opened, and the walls scraped with the cleaning tools, when the dust deposited on the heating surfaces falls to the bottom of the stove, and is removed by the bottom cleaning doors F.

With respect to the mooted question of the correct temperature of the blast, it is fairly summed up in some remarks made by Sir William Fairbairn before the Inst. of Civil Engineers;—"Fairbairn stated that the quality of iron had been greatly improved since the introduction of the hot blast. This arose, in his opinion, from the higher temperature of the blast, which not only tended to increase the temperature of the furnace, but raised the melting-point of the ore, and volatilized the phosphorus, sulphur, and other injurious elements, which, at a lower temperature, combined with the iron. This was certainly not the case since the blast had been raised from 600° to 900° or 1000°; and he believed that if the temperature was increased from 1000° to 1500°, the quality would be still further improved, and the value of the produce greatly enhanced. In his early investigations of the comparative value of hot and cold blast iron, he did not discover much difference in their mechanical properties; but many of the ironmasters took advantage of the discovery to remelt their old cinder heaps, and the result was a description of iron little better than pipe-clay, which gave the hot blast a bad name, and caused engineers, without further inquiry, to insist on having cold blast in their cast-iron constructions. At the present time little or nothing was said of the difference between hot and cold blast iron."

Cupola Furnaces.—In cupola furnaces the blast enters generally either through tuyeres or through horizontal or vertical slits at the sides of the cupola; but a disadvantage attends these arrangements, inasmuch as the blast being too cold at the beginning to combine at once with the carbon

of the fuel, must first be diffused through the fuel before it can burn, and the greatest heat is therefore produced at a point situated above the tuyeres. The height of this point varies with the

4267.

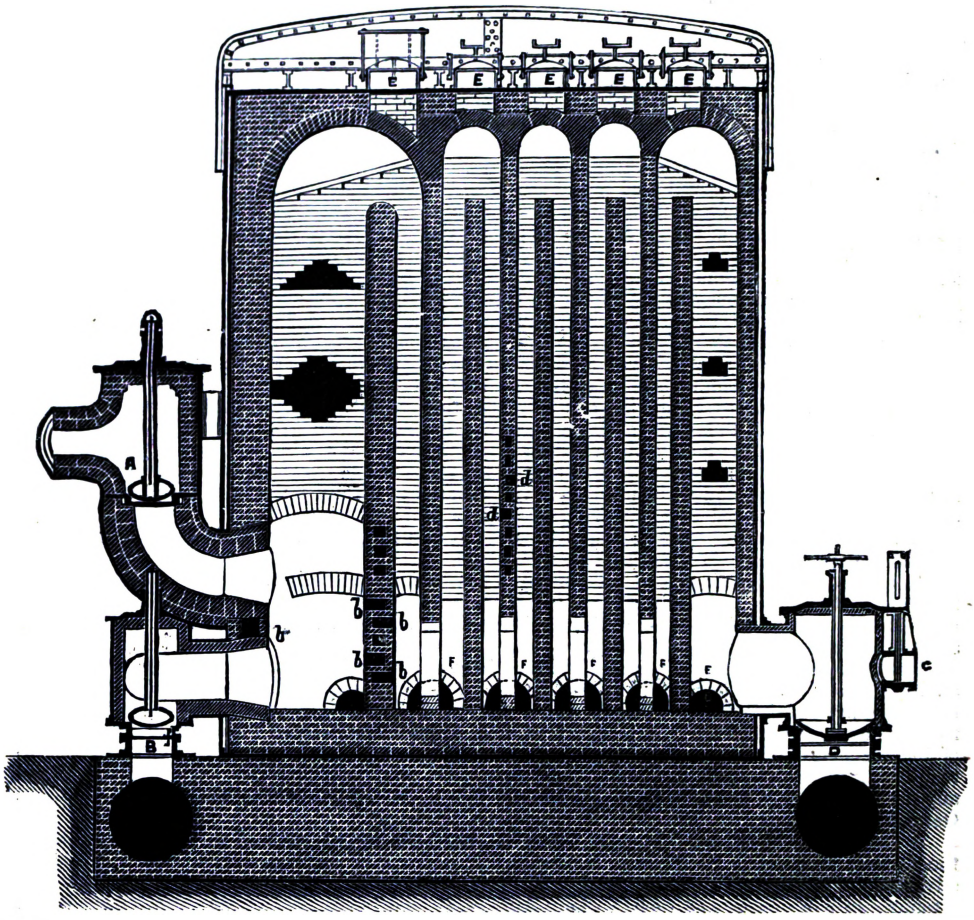

4268.

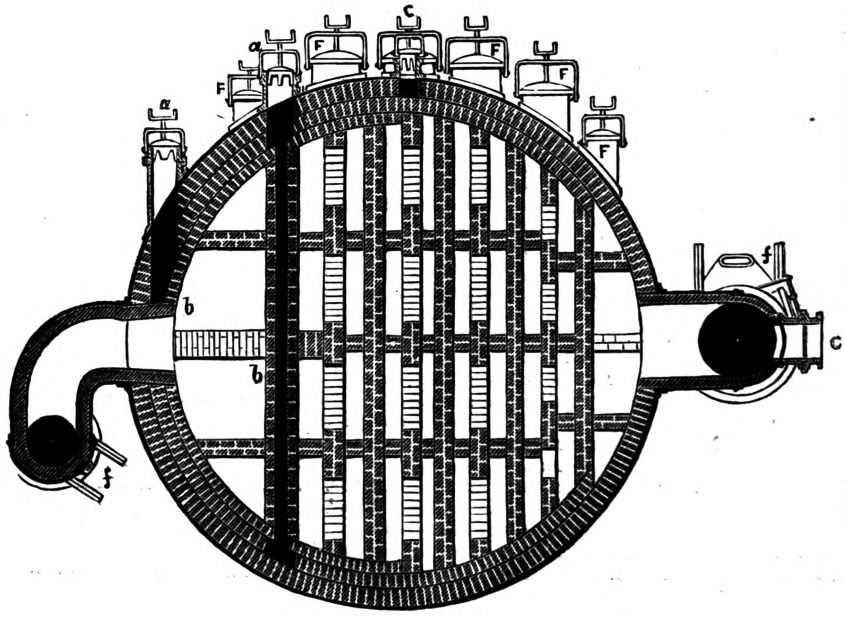

respective quantities of fuel and of blast that are introduced; and when sufficient fuel is supplied, the point of greatest heat will be situated at the level, where all the oxygen in the blast has

4269.

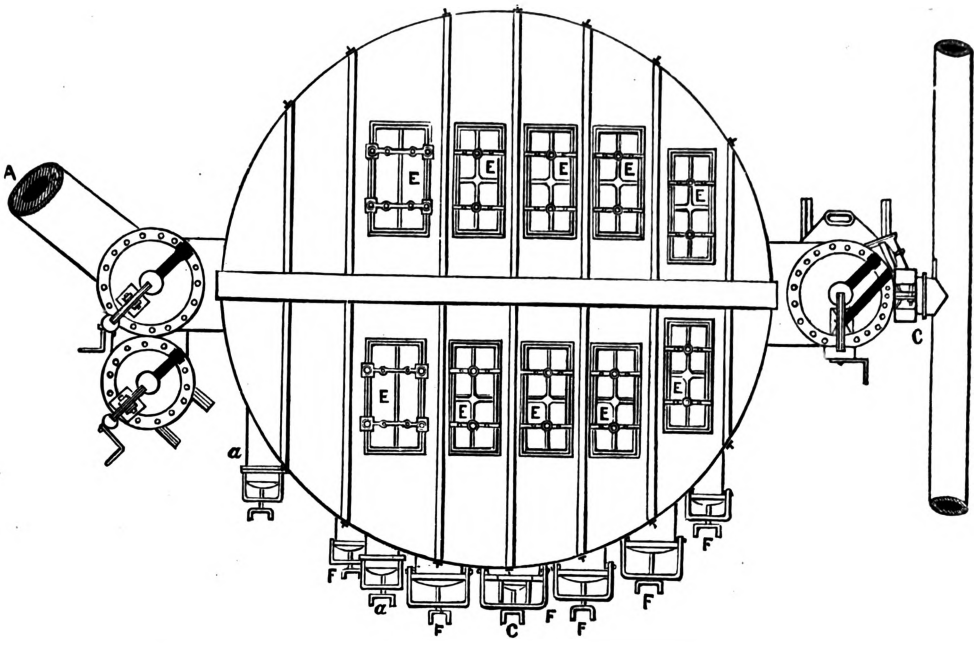

become carbonic oxide. It is found in practice that the range of level of this point extends over several feet, according to the quantity of fuel used, the height being generally about 3 ft. above the level of the tuyeres; but in the cases mostly met with in foundries there is not a sufficient supply of fuel close to the tuyeres or openings where the blast enters, and in these cases. therefore, the blast does not meet with sufficient fuel for complete combustion until it arrives at the upper layers of the fuel, and it consequently passes the hot metal and causes it to be burnt. The waste upon the metal put into the cupola amounts to from 5 to 10 per cent. generally in these furnaces; and the rapid burning away and destruction of the lining extends over a height of 5 to 6 ft. from the hearth. Another disadvantage, resulting from the necessarily confined space occupied by the tuyeres or blast openings, is that the blast, being thereby concentrated, acts upon the carbon contained in the iron, and consequently deprives the iron more or less of its fusibility.

To remove these disadvantages of the ordinary construction of cupolas, says Jacob Eichhorn, in a paper read before the Institution of Mechanical Engineers, a plan has been devised and carried out successfully by Henry Krigar, of Hanover. Krigar's plan aims at the accomplishment of the following objects;—To concentrate the heat in the lower part of the cupola, where there are facilities for easily repairing the furnace lining, and to render the action of the cupola uniform throughout the operation of melting; to give the hearth such a size that the column of fuel between the layer of melted metal and the level where the blast enters the interior of the furnace may vary but little in height, so as to limit the range of the destructive action upon the furnace lining; and to ensure the blast being taken up by the carbon of the fuel from the moment of its entering the furnace, and so prevent it from injuring the heated metal by oxidizing it.

The construction of Krigar's cupola is shown in Figs. 4270 to 4273. Fig. 4270 is a vertical section from front to back; Fig. 4271 a vertical section from side to side; and Figs. 4272, 4273, sectional plans at different levels.

The vertical shafts A A of the cupola are made rectangular in form, either square or oblong, as shown in the plan, Fig. 4272, and parallel or with very little taper in height, so as to avoid any prominent part upon which the flame could strike, and which would be exposed to rapid destruction. A backing of sand is used behind the brickwork to concentrate the heat in the cupola. The shaft A is supported at front and back by arches B B over the lower chamber C C; and at the sides of this chamber is also a backing of sand to keep the heat in. Over this backing and round the bottom of the shaft A runs the air-passage D D, into which the blast is delivered from the two air-mains E E; and the blast entering through this passage cools the brickwork of the cupola, and becomes heated itself; it then passes down into the melting chamber C C through the two long slots F F in the roof, one at the front and the other at the back, Figs. 4270, 4272, extending the whole breadth of the hearth. These slots are constructed by leaving a space of 4½ in. width between the outer arches G, Fig. 4271, and the inner arches B B that carry the shaft A; the length of the hearth H from front to back is consequently made greater than the breadth. The front of the cupola is closed by an iron door K on hinges, extending the whole breadth of the hearth; and a smaller door L is placed at the back, to facilitate the drawing of the cupola by inserting a rake at the back; by this means the drawing of the cupola can be accomplished regularly within three or four minutes.

4270.

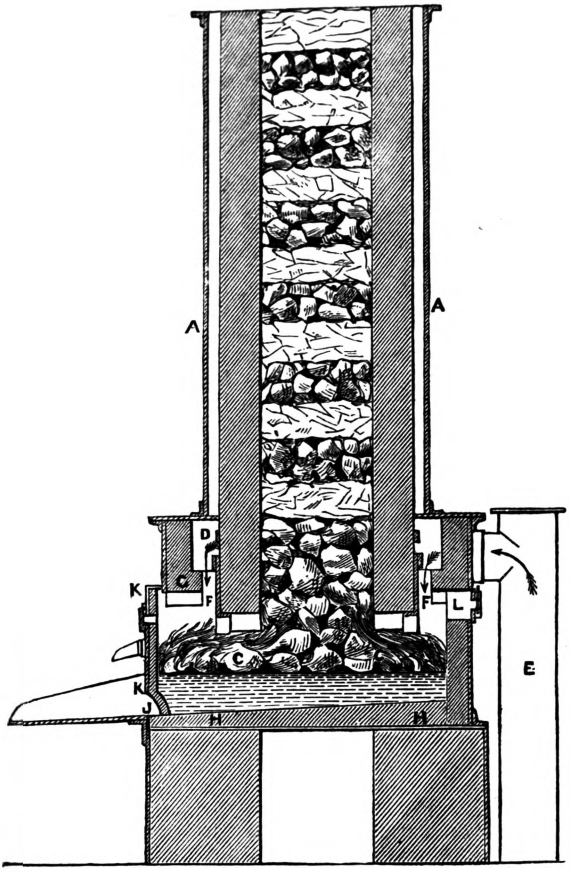

4271.

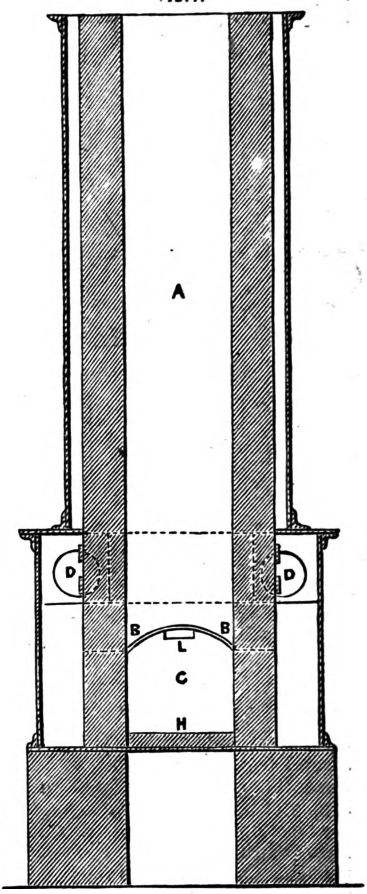

For starting the cupola, about 1 to 1½ cwt. of coke is placed on shavings or some burning coke upon the hearth, and more is added by degrees from the front door, until all the coke intended for the first filling is put in. The door K is then closed, being first wetted on the inside; and the tapping hole J is formed as usual by placing clay round a wetted stick. The whole height of the door is then plastered on the inside with a mixture of clay and sand, the door being set forwards about 5 in. in front of the breast of the furnace, to allow space enough at top for the furnace-man to get his arm in for lining the door; and the space at top is afterwards closed with bricks. This mode of closing is adapted for cupolas working with a pressure of blast of from 4 to 7 in. of water; but where the blast is stronger, a wall of coke is first built up inside the melting chamber C and wetted; and the door being shut and secured with wedges, the space between the door and the wall of coke is then filled with foundry sand rammed in.

The amount of filling that is put in for starting the cupola varies with the size of the cupola and the quantity of melted metal that the hearth is intended to contain at once; but the amount is always much less than is

4272.

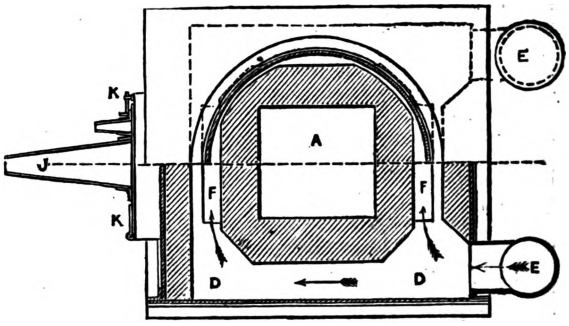

4273.

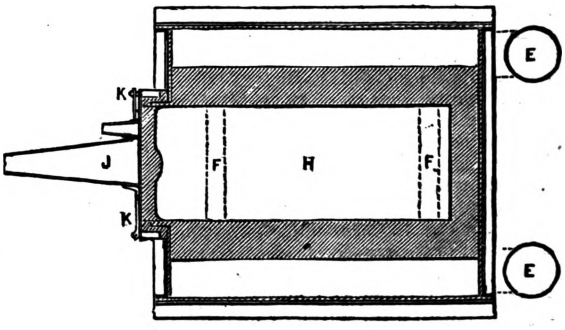

usually employed in other cupolas. One of the Krigar's cupolas, capable of melting 3 tons of iron an hour, requires a filling of 2¾ cwt. of coke for starting it, or 3¾ cwt. when it is intended to keep the whole of the melted metal in the hearth, to be tapped all at once. Upon this filling a charge of 8 cwt. is added from the top of the cupola shaft, and then about ½ cwt. of coke; and the same in succession, until the whole charge is put in, filling up the shaft A to the top, as in Fig. 4270. After the casting, a certain quantity of the coke is drawn out unconsumed. The average quantity of coke consumed is 1½ cwt., or 168 lbs. the ton of iron melted, when only 3 tons are melted in each charge; and the consumption is 147 lbs. the ton when charges of 6 tons are melted; and 140 lbs. the ton with heavier charges.

The metal melted in this cupola is found to be very fluid, and indeed so fluid, that in the cases where in an ordinary cupola seldom more than one-half of cast-iron scrap is used, this cupola bears under the same circumstances the addition of fully three-quarters of scrap. At the same time the softness of the metal is retained; or, as it is commonly termed, the metal is clean. If the cupola be allowed to stand without blast for an hour after the filling is completed, and the blast be then turned on, the metal begins to run down to the tapping hole six minutes afterwards; but if the blast be admitted immediately on completion of the filling, without allowing the cupola to stand, the metal may be made to run from the tapping hole within one hour from the time that the cupola was empty before filling commenced.

This cupola has the advantage of allowing the whole of the metal melted during one hour to be retained in the hearth; the result, however, is not obtained by increasing the height from the bottom of the hearth to the crown of the arches carrying the shaft, but by increasing the length of the hearth from front to back, as shown in Fig. 4270. If the height from the bottom of the hearth to the arches is made too great, the metal loses the great fluidity that distinguishes the working of this cupola. The height from the tapping hole J to the charging opening at the top of the shaft A is from 13 to 14 ft. As the construction of the cupola causes it to work hotter than ordinary cupolas, it requires a smaller area of shaft than an ordinary cupola for the same blast and yield, the reduction being in the proportion of about 3 to 7; any existing cupola shaft can therefore be altered to this plan, and will still yield more metal than before in the same time.

The quantity of blast required is 30 cub. ft. a second, reduced to the pressure of the atmosphere, for each ton of iron melted an hour. The pressure of the blast used may be as low as 4 to 5 in., but a pressure of 8 or 9 in. is generally adopted. Whether this or a still higher pressure is used, no further economy of fuel is obtained, but only a greater quantity of metal is melted down in the same time by the same furnace.

With regard to the wear and tear of the cupola, the lower part of the shaft A is exposed to the greatest destruction, but that is the only portion which suffers more than the lining of an ordinary cupola, and it is easily accessible for repair. The coke falling from the shaft into the melting chamber C C, Fig. 4270, stands there in a heap, upon which the blast rushes through the two transverse slots F F in the roof; and the heat from the burning fuel being radiated into the air-passages D D, the blast becomes prepared for combining rapidly with the carbon of the fuel, before it has an opportunity of coming in contact with the melting metal and wasting it by oxidation; and the action of the blast is finished, as may be judged from the appearance of these cupolas, at a level of only about 14 in. above the crown of the arches B B. This corresponds to the portion of the cupola that requires to be renewed about every three or four months, and a small arched iron bar of 2 or 3 in. width, remaining constantly in its place in each arch B, allows of the arches being readily replaced at any time without the introduction of centring. The shaft A suffers very little wear itself, and after six months' work it can only be said that the bricks are strongly glazed. When the arches B B are replaced every three or four months, the face only requires patching or plastering up once or, at the most, twice a week; and only about half or little more of the repairing material is required that would be necessary in an ordinary cupola. The total cost of wear and tear therefore does not at most exceed that of the ordinary cupolas, while there is less trouble in keeping Krigar's cupola in repair.

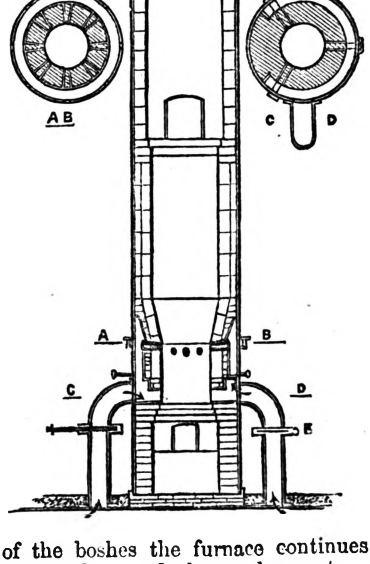

With regard to economy of metal, the results of the working of this cupola are found to be that in melting pig iron, such as Calder No. 1, the loss amounts to 3·4 per cent. on the metal weighed in; and when mixed with three-fourths of railway-chair scrap, the loss is only 2·2 per cent.

Figs. 4274 to 4276 are sections of one of Ireland's cupolas, of which a large number are at work in England. The cupola has two rows of tuyeres, and is made with boshes like a blast furnace. In the lower row there are three tuyeres, each 6 in. in diameter inside, whilst in the upper row are eight tuyeres, having a diameter of 2 in. at the nozzles. The centres of the two rows of tuyeres are 1 ft. 7 in. apart vertically. The lower part of the furnace is 2 ft. 6 in. in diameter, its size being reduced where the tuyeres are inserted to 1 ft. 8 in. The boshes are 1 ft. 9 in. high, and enlarge from 1 ft. 8 in. to 2 ft. 9 in. in diameter. From the top of the boshes the furnace continues 2 ft. 9 in. in diameter for a height of 4 ft. 9 in. to the charging door, and then enlarges to a

diameter of 3 ft. 3 in. for the remainder of its height. The total height of the furnace from the floor to the top is 21 ft., and the diameter outside the iron casing 4 ft. 1 in. In charging this furnace it should be filled with coke to the top of the boshes, and four separate hundredweights of iron, alternated with 3 cwt. of coke, then be introduced to fill it up to the charging door. In these furnaces a ton of freely-running iron has been run down by 1¼ cwt. of coke, but more usually from 2 to 2½ cwt. are required. Great care should be taken that the furnace is kept to its proper shape by daily, or at all events frequent, repairs. The charges should also be made level, and not thicker in one place than another.

Fig. 4277 shows some of the principal details of a cupola furnace blown by steam-jets, as constructed by Woodward Brothers, Manchester.

The figure represents the cupola in position outside the foundry, with the metal spout F passing into the latter through an opening in the wall. The steam-pipe is taken up to the top of the cupola from a boiler, it is carefully lagged to prevent condensation, and terminates in a jet A, formed by a plain nozzle, similar to the jet-pipe in a locomotive chimney, the sectional area of the jet being fixed, as there is no necessity in practice for regulating the draught by any alteration of the size of the jet. The air is drawn into the furnace at the bottom through a series of circular openings, placed radially at two different horizontal levels. The lower circle contains four openings, or air-inlets, each 6¾ in. in diameter, and in the upper row there are eight air-inlets, each 3 in. in diameter. Each of these inlets has a cover, or valve, with which it can be closed from the outside if necessary. The charges are lifted to the door B, at the top of the furnace, and charging can be continued during the operation. Whenever it is intended to use a cupola for prolonged periods requiring continuous charging, it is preferred to provide the furnace with a feeding hopper having a sliding door opened and closed by a lever. The diameter of the cupola shown by the figure is 3 ft. at the boshes, total height 22 ft., and inside diameter of the cylindrical part 5 ft. The door at the bottom serves for cleaning the furnace and drawing out any materials remaining at the bottom after a charge is completed. In working, the furnace is charged with alternate layers of coke and iron, as is usual, the air-passages being all opened. Afterwards the draught is regulated according to the judgment of the founder, and care is particularly taken to close any single air-inlet opposite to which the iron is seen to accumulate in a semi-liquid state. The temporary interruption of the ingress of cold air at that particular spot soon allows the temperature to rise to the proper degree for making the iron run freely, when the admission of air can be recommenced.

4277.

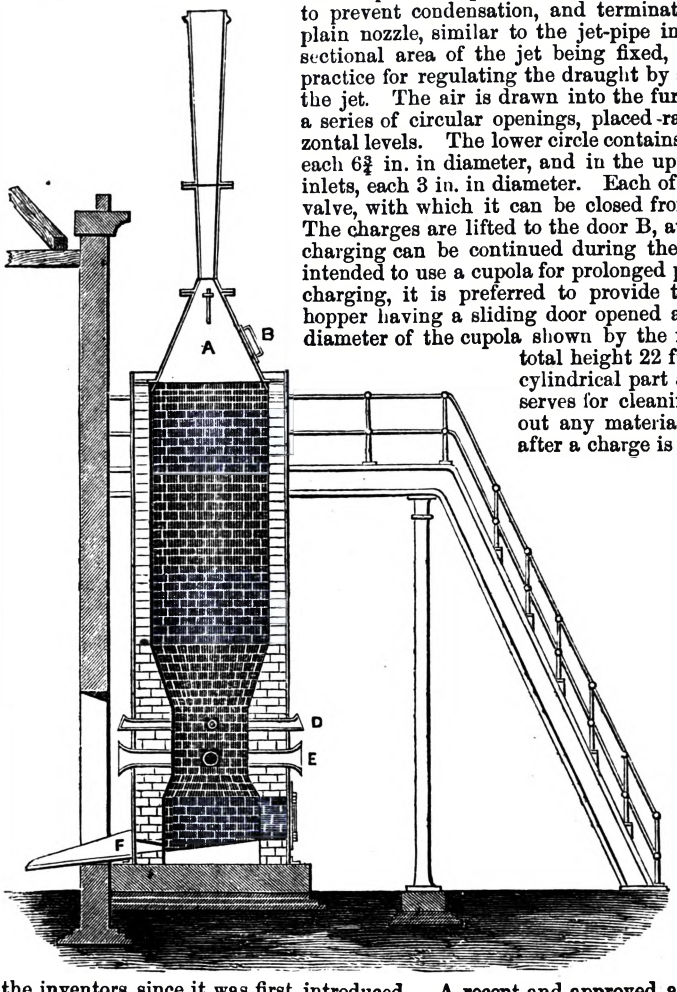

The original shape of the Woodward cupola has been frequently altered by the inventors since it was first introduced. A recent and approved arrangement is a plain closed top, having a large gas-pipe leading off at the side, which pipe is carried down outside to the bottom of the cupola, and has the steam-jet applied to its bottom end. This arrangement has the advantage of cooling the gases down when drawn off, and thus reducing their volume, which gives a more favourable action to the jet.

Fig. 4278 is of the cupola and feeding arrangement, showing an elevation at *a*, with gas-pipe and jet arranged for down draught, and leading into a flue under the floor, the feeding hopper being closed; *b* is a full section, and shows the horizontal flue leading direct to a chimney, the hopper open, and the charging stage with ladder.

Wrought Iron directly from the Ore.—We shall not allude to the ancient methods of converting ore into malleable iron; they possess only an historical interest, and accounts of them can be found in Percy's great work on the Metallurgy of Iron. The present mode of operation is represented in the American bloomery process. Although this was the system by which, in ancient times, all the iron made in England was obtained, it has long since been discarded in favour of less direct, but more economical, modes of smelting iron. A modification of the old bloomery process, however, still holds its ground in North America, where, in 1868, in Essex and Clinton counties alone, some 40,000 tons of malleable iron were made direct from the ore, to be consumed at Pittsburgh, in the

manufacture of cementation steel, for which this iron is eminently fitted. It is therefore believed that a description of the American bloomery process, as now worked in the States and Canada, compiled from the report of Dr. Sterry Hunt, recorded in the Journal of the Iron and Steel Inst. by David Forbes, F.R.S., may prove acceptable.

The bloomery hearths, or low furnaces, Figs. 4279, 4280, in which this process is carried on, vary in size from 27 by 30 to 28 by 32 in. on the sides, and are

4278.

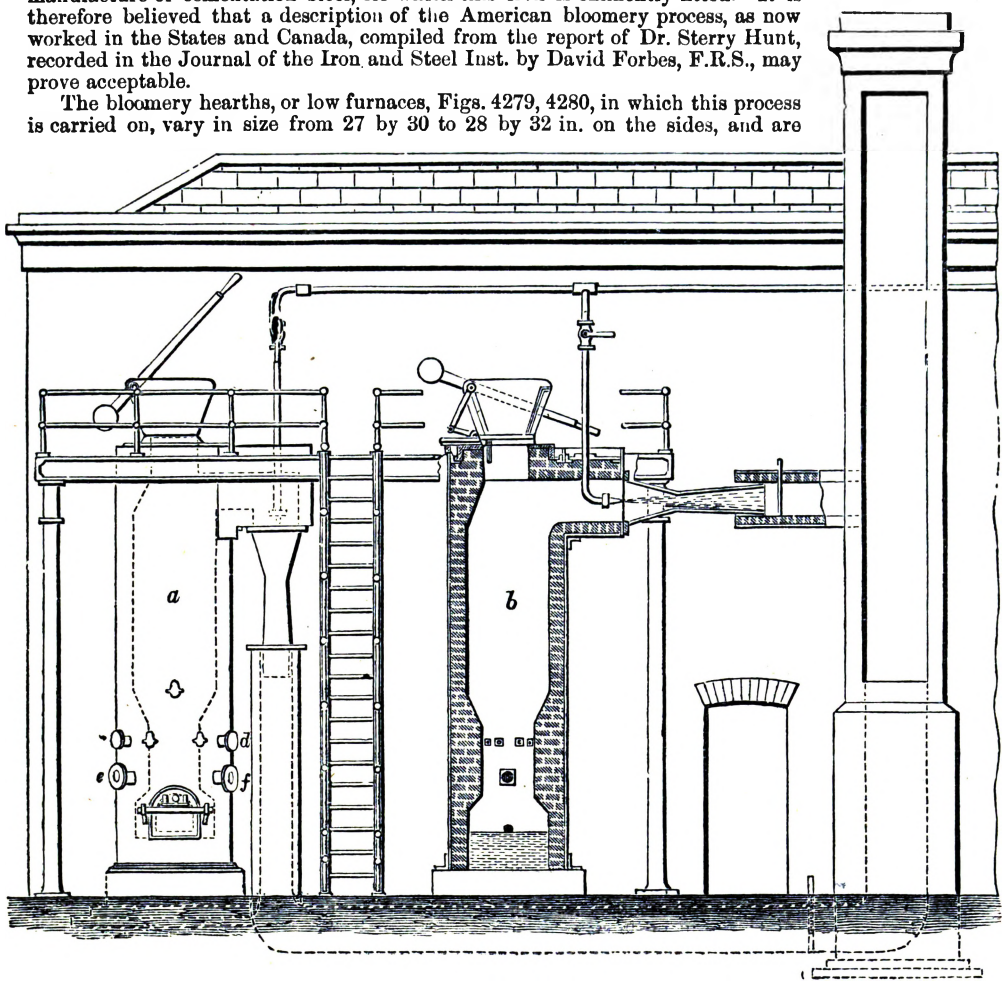

4279.

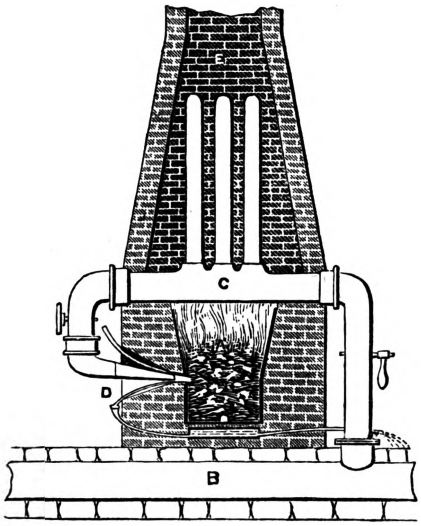

4280.

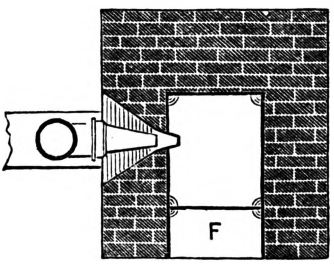

4281.

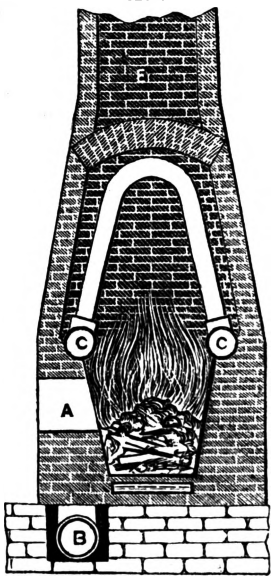

from 20 to 25 in. high above, and from 8 to 14 in. deep below the tuyere. The sides are formed of thick cast-iron plates, and the bottom of beaten clay or slag; or in the more modern hearths, of iron, cast hollow, so as to allow of their being kept cool by a stream of water circulating through them.

A is the hearth, B the blast-pipe from the bellows or fan, generally below ground, and C a hot-air apparatus of the form represented in Fig. 4281. The pipes are so

arranged that either hot or cold blast can be used. At D is a semicircular water-tuyere. The water, after being discharged here, is conducted in a pipe under the iron bottom of the fire, and confined in a separate box, from which it is finally removed to a drain. Through the front plate is a hole F, near the bottom of the fire; this serves for tapping of the superfluous cinders. E is a chimney for leading off the waste heat after having heated the blast-pipes.

In the East Middleburg bloomery hearths the bottom plate is 4 in. thick, with an internal hollow space of 2 in.; the side plates, which slope slightly inwards and downwards, are 1½ in. thick, and rest on the bottom plate. A water-box, 12 by 8 in., is let into the tuyere-plate, a stream of water circulating through it, and the bottom plate as wide as around the tuyere. The length of the hearth from the tuyere-plate to that opposite it is 24½ in., and the breadth from front to back 29 in.; its consequent area is 710½ sq. in. The tuyere enters 12 in. above the bottom, and is inclined downwards, so that the blast strikes the middle of the hearth; the tuyere orifice being a segment of a circle, 1 in. high by 1¾ in. wide. In front of the furnace, 16 in. from the bottom, is placed a flat iron hearth, 18 in. wide; the side plate beneath it is provided with a tap-hole, through which the slag is drawn off from time to time. The iron plates last two years.

The bloomery hearths at the New Russia Works, at Moriah, have beds composed merely of beaten down earth or ashes. They are 24 in. deep, and the hearths have a superficial area of 640 sq. in., measuring 20 by 32 in. at the top, but are somewhat smaller towards the bottom; the tuyere enters one of the narrower sides of the rectangle.

The blast employed in the American bloomeries has a pressure of from 1½ to 2 lbs. to the square inch, except when the ore is in the state of fine sand, when it is found necessary to reduce the force of the blast to from ⅞ to 1¼ lb. the square inch. The blast is heated by passing through cast-iron pipes placed in a chamber above the hearth. These pipes, which are 5 in. internal diameter and 1 in. thick, are in the form of inverted siphons, each limb being about 7 ft. long; the temperature of the blast being about from 500° to 600° Fahr. Besides enabling each hearth to turn out more iron in the same time, the employment of the hot blast is reported to effect a saving of about 20 per cent. in fuel, 300 bushels of charcoal being required to produce 1 ton of iron of cold blast, where 240 would suffice when hot air is employed. The quality of the metal is, however, considered to be deteriorated if too hot blast is used; and at the New Russia Works it is stated that the iron turned out red-short when too hot a blast was employed, which was never known to be the case with the same ores when using cold blast.

As in all other systems for the direct production of wrought iron from the ore, it is an essential point in the American bloomery process also that the ores should be as rich as possible in iron, such as magnetic ore, specular ore, crystallized red oxides, and some rich black or brown hematites, and it is desirable that they should not contain less than 50 per cent. When the ores contain much quartz or other extraneous mineral matter, they are, in America, calcined in lump, and after crushing, so as to pass through a sieve with openings of about ⅛ of an inch, are washed until little but the native oxide of iron remains behind, unless in the case of the titanic iron ores, when, as in the Moisie Works, the washed sands still retain the whole of the titanic acid, in the form of ilmenit, which naturally reduces the percentage of iron contained in the worked ore.

4282.

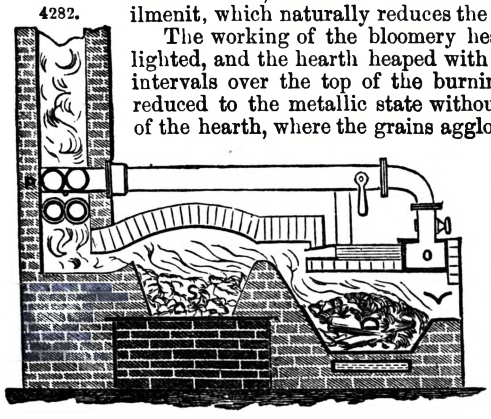

The working of the bloomery hearths is conducted as follows:—The fire being lighted, and the hearth heaped with charcoal, the powdered ore is scattered at short intervals over the top of the burning fuel, and in its passage downwards becomes reduced to the metallic state without being melted, but accumulating at the bottom of the hearth, where the grains agglomerate into an irregular mass, the earthy matter in the ore forming a liquid slag, which is drawn off from time to time by the tap-hole. At the end of two or three hours, when a sufficiently large mass or *loup*, as it is termed, has formed itself, this is lifted by means of a bar from the bottom of the hearth, brought before the tuyere for a few minutes to give it a greater heat, and then carried to the hammer, where it is wrought into a bloom, the bloomery fire itself being used for reheating, or, more recently, an arrangement by which the waste heat from each pair of hearths passes into a sort of furnace, Figs. 4282

4284.

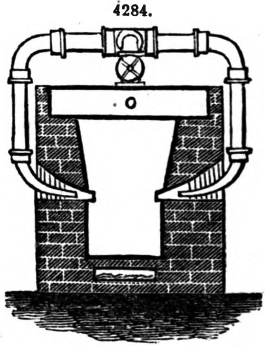

4283.

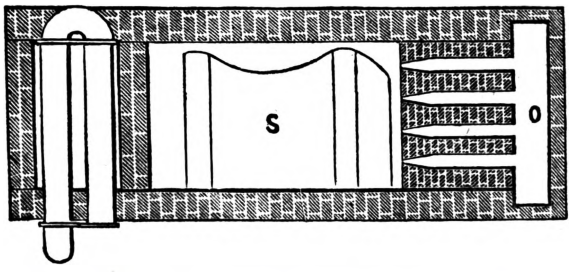

to 4284, at a level above the bloomery fires, and which serves to reheat the blooms, and enable them to be drawn out into bars. This operation concluded, the addition of ore to the hearth is resumed,

and the production of iron is thus kept up with but little interruption. In this way a skilled workman will, with a large-sized hearth, turn out a bloom of 300 lbs. every three hours, and, in some instances, even more than 1500 lbs. have been turned out in the twelve hours.

Referring to Figs. 4282 to 4284, V is the bloomery fire, from which the flame is conducted over the sand-hearth S, which heats the blooms or bars, and is then conducted to heat the blast in the pipes P. These pipes are straight and walled in the chimney. At O is a set of blast-pipes: these furnish heated atmospheric air to the waste heat from the fire, and burn any carbonic oxide which may escape from the fires. In order to obtain sufficient heat for the stove S, two fires are sometimes arranged, so as to supply their waste heat to it.

At the works of Messrs. Rogers, of Ausable Forks, twenty-one fires were in operation in 1868. The ore was the magnetic oxide of iron, mixed with quartz and felspar. After being slightly roasted, to render it friable, it was stamped, so as to pass through screens with openings of about $\frac{1}{8}$ of an inch, and then concentrated by working. Two tons of the worked ore, equivalent to form 4 to 5 tons of the crude ore as it came from the mine, was required to make 1 ton of blooms.

At the New Russia Works, in Moriah, near Port Henry, a nearly pure magnetic oxide of iron is employed, 3 tons of the ore yielding 2 tons of blooms. As perfectly pure magnetite contains only 72 per cent. metallic iron, the above proportion (66·6 per cent.) shows great economy of working, considering the nature of the process. The dimensions of the hearths used at these works have already been given. The pressure of the blast varies from $1\frac{1}{2}$ to $1\frac{3}{4}$ lb. to the square inch, and the average produce of iron for each fire was 2400 lbs. blooms in twenty-four hours; the amount of charcoal consumed varying from 250 to 300 bushels to the ton of blooms turned out, and the weight of the charcoal from 16 to 18 lbs. a bushel.

At East Middlesburg, where the conditions are very similar, the estimated consumption of charcoal was 270 bushels to the ton of blooms, and the pressure of the blast was from $1\frac{3}{4}$ up to 2 lbs. a square inch.

The cost of producing a ton of blooms direct from the ore depends greatly on the price and richness of the ore. In 1867 the 2 tons of dressed ore required to make 1 ton of the fine Ausable iron was estimated at 18 dollars, whilst the $1\frac{1}{2}$ ton of ore consumed at the New Russia Works would probably not cost 9 dollars. An estimate made by a competent ironmaster shows the cost of producing iron in New York in 1868 as follows

2 tons ore .. .. .. dollars	10·00
300 bushels charcoal at 8 cents	24·00
Wages	9·00
General expenses	3·50

Cost of the ton of blooms, dollars 46·50; currency = 37·20 gold.

The above prices are in American currency, which at that time was equal to about $\frac{80}{100}$, making the gold value 37·20 dollars. The estimate of another manufacture in Clinton county gave 7 dollars for wages, and it will be observed that the quantity of charcoal taken into the above estimate exceeds the average, which may be calculated at about 270 bushels.

This mode of manufacturing wrought iron is a variety of the so-called Catalan method, which is conducted with the most ancient form of forges for making iron, and is still practised in some parts of Europe. In those instances we find the fire or hearth formed of sandstones, and protected by heavy charcoal dust. Cast-iron linings are not often met with. By these means coal may be saved; but it causes a greater loss of ore than bloomery fires, and more labour.

German Forge.—Grey or white pig iron is converted into blooms in bloomeries similar to those above described. A difference in the size and form of the hearth and its lining, position of the tuyere, and manipulation, is made in the German forge in cases where grey pig iron, white pig iron, or plate metal is worked.

Fig. 4285 is a vertical section of a German forge-fire. The only difference between this fire and the bloomery fire is, that the bottom is not so deep; it ranges from 6 to 10 in. below the tuyere, and the cast-iron linings are more or less inclined, which facilitates the operation and saves fuel. The tuyere T is, according to the kind and quality of crude iron, more or less inclined, and projects into the fire some inches. A water-tuyere with solid bottom is most generally used. The nozzle N is made of light sheet iron attached to a leather bag, and by that means to the blast-pipe, so as to be easily moved and directed to those parts in the fire where it works slow and where blast is needed. Fig. 4286 shows a plan of the fire, two of which are frequently attached to one chimney. Most modern fires have each a light chimney constructed of bricks; it has no other office to perform than to conduct the smoke and gases out of the building; and as the temperature in it is very low, it ought to be spacious, at least 4 sq. ft. in area for each fire.

The form of the hearth is the only important object in this apparatus; all the other parts may assume any form whatever, without any injury to the success of the operation. The blast should be dry, and from $\frac{1}{2}$ to 1 lb. of pressure is necessary; 150 to 300 cub. ft. a minute for each fire are essential to carry on the operation.

The form of the fire is an oblong, 24 × 26 in., and from that to 25 × 32 in. in the clear. The cast-iron linings are plates of $1\frac{1}{2}$ to $1\frac{3}{4}$ in. in thickness, and firmly wedged together so as to resist the disturbance which may be caused by the use of the tools. The iron plate at the tuyere is inclined towards the fire from 8° to 10°; the opposite plate is not quite as much inclined from it. Front and back plates are generally plumb, or inclined from the fire; the first is provided with a 2-in. circular hole near the bottom, for the discharge of slag. The bottom is formed of a cast-iron plate 2 in. in thickness, which is kept cool by the water-box W, Fig. 4285. In some instances the water is directed under this bottom plate, without the box, which causes the bottom frequently to break. The upper edge of the plates for the fire, and consequently the whole hearth, is from 15 to 18 in. above ground. The inclination of the tuyere, the inclination of its plates, and the slope of

the bottom, are the most important subjects to be considered by the smith in constructing it. These are not the same in all instances. They are regulated by the quality of the crude iron, the iron to

4285.

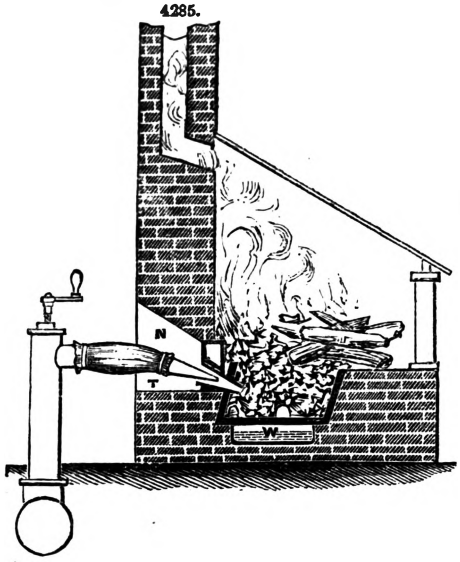

4286.

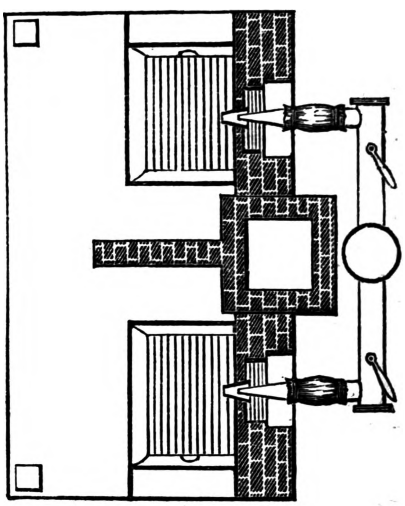

be manufactured, quality of coal, and the views of the workmen. Here, as well as in all other cases, the foundation of the hearth must be dry, so that no moisture may approach the fire.

The operation in these fires is very simple; with some experience, good iron may be made from any kind of crude iron. When the apparatus is well dried by a slow fire, the hearth is filled with charcoal and a gentle blast applied so as to kindle all the coal and heat the plates, which are protected by a heavy layer of charcoal dust. Hard charcoal, not of too large size, about that of an egg or a fist, is preferable to soft charcoal; it bears a stronger blast and works faster. Either previous to kindling fire, or when in blast, the bottom is covered by throwing on good rich slag from previous refinings, namely, that obtained by reheating balls or blooms. A cover of at least 2 in. in thickness should be on the bottom, and more than that when grey pig is melted. When the fire is thoroughly ignited by applying about one-third of the full blast, or 150 cub. ft., blowing with a nozzle and tuyere of $1\frac{1}{2}$ in. diameter, the pig iron is charged; from 200 to 300 lbs. being charged at once, or added gradually. When plate iron is charged, the latter mode is applied; if grey pig, the former. But there is no rule for this; one refiner adopts one plan for all kinds of crude iron, others make a distinction. Grey iron requires less blast and less heat than white iron, a shallow hearth, and more dip of the tuyere; the bottom is also more inclined towards the front than when white or plate iron is to be refined. A slope of 3° for the bottom may be considered the extreme adapted for very fusible iron. We must classify crude iron according to its fusibility, and not its colour, for impure white iron may work far slower than pure grey iron; and when we here use the term grey iron, or white iron, we refer to the fusibility of the iron, not to its colour. In describing the manipulation, we will treat of the two extremes, the working of grey iron and of plate iron. The bulk of crude iron used, and which forms the varieties, is worked between these two modes of manipulation.

Grey pig iron is melted in at once, by applying a very low heat; the broken pigs may therefore be placed above the tuyere; it ought not to be quite fluid when it arrives at the bottom. Either while the iron is thus melting down, or when it is all at the bottom, and after it has been gently stirred by means of a crowbar, the floating cinder is tapped off and thrown away. It is of no use, and contains most of the injurious impurities. If the iron is still fluid, some hammer-scales are thrown on it, and a stronger blast directed upon it; it is then stirred, and the resulting cinder is tapped and thrown away. When thus made more coherent, the iron is broken up, lifted from the bottom, and heated in parcels before the tuyere. The still crude iron now melts again, and on arriving at the bottom begins to boil. If it is now diligently stirred, by means of an iron bar, under an increase of blast, it gradually gathers into lumps; when in this condition, the cinder is again tapped off from the iron and saved. The mass is now tough, and assumes the nature of wrought iron. Under an increase of blast, this iron is turned about, thoroughly heated on all sides, and gradually converted into one or more round balls, which are now brought to the tilt-hammer and shingled down into blooms. All this time the fire is well supplied with coal, and the blast increased to its full force on the finished loop. If the iron is very impure and fusible, it will require a great deal of labour and the use of much coal; still, the yield cannot be expected to be high, particularly when a good quality of iron is to be made. As much as 250 bushels of coal may be consumed on weak pig iron; four hours' work is required on a heat, and 30 per cent. of iron may be lost.

White iron, or plate iron, is worked on a different plan. The basin of the hearth is deeper than for grey iron, the tuyere does not dip so much, the blast is stronger from the beginning, and the work commences as soon as melted iron arrives at the bottom. This kind of iron is never very fusible, and if it is fluid it does not long remain so after being exposed to the effect of the blast. The purer and stronger the iron is, the more it is inclined to coagulate. So soon as it is partly

melted, it is lifted from the bottom, brought before the tuyere, and by turning it about it is heated and refined on all sides. Those parts which do not resist the strong fire, melt down again and are taken up a second time. A number of small balls are thus formed, which, on being exposed to an increasing heat, are welded together and formed into a large ball of 100 or more pounds, which is brought under the hammer for compression. The work on this kind of iron proceeds faster than with grey iron, less coal is used, and the yield is far better. In two hours 300 lbs. can be heated, and a ton of iron by the use of 120 bushels of charcoal, and from 85 to 90 per cent. of iron yielded from the crude plate iron. One fire will easily produce from 4 to 5 tons a week, while from grey pig iron not more than half that quantity can be obtained.

We have detailed the methods just described, as they are of great service where the requisite minerals and fuel are plentiful, but where the demand for metal is not sufficient to justify the outlay for erecting a blast furnace, or when capital is scarce. The methods of making wrought iron by similar means are innumerable, but the variations are chiefly caused by the quality of the crude metal and the quality of iron to be produced.

Refining Cast Iron.—In the manufacture of the finest qualities of wrought iron refining is universally adopted, but with the inferior kinds it is not so much employed as formerly.

The refinery furnace, Figs. 4287 to 4289, usually consists of a cast-iron framework, surmounted by a short brick chimney. The bottom frame rests on a brick or masonry bedding, upon which is laid a floor or hearth of dressed sandstone, 10 or 12 in. thick. At each side and at the back, within the vertical frames, cast-iron water-blocks are fixed, and a cast-iron dam-plate, Fig. 4289, in front, the whole forming a quadrangular space about 4 ft. square inside, by 15 or 18 in. deep. Above the side blocks, and resting on a ledge cast for their reception, are fixed tuyere-plates, 2 to 3 in. thick, having openings for the insertion of the water-tuyeres, and bolted fast at the ends to the vertical frames. The space between the tuyere-plates and the top frame which carries the chimney is fitted with stout cast-iron plates, bolted at the ends to the vertical frames. In front, resting on the dam-plate, it is usual to have a dust-plate for the convenience of filling and working the fire. At a height of a few inches above this plate in front, and also above the rear water-block, cast-iron doors,

4287.

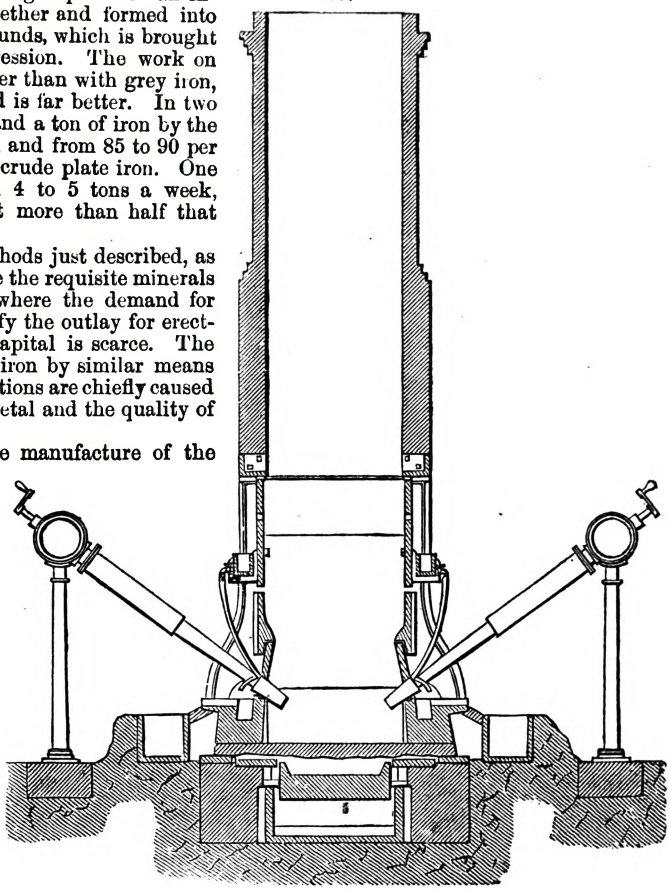

4288.

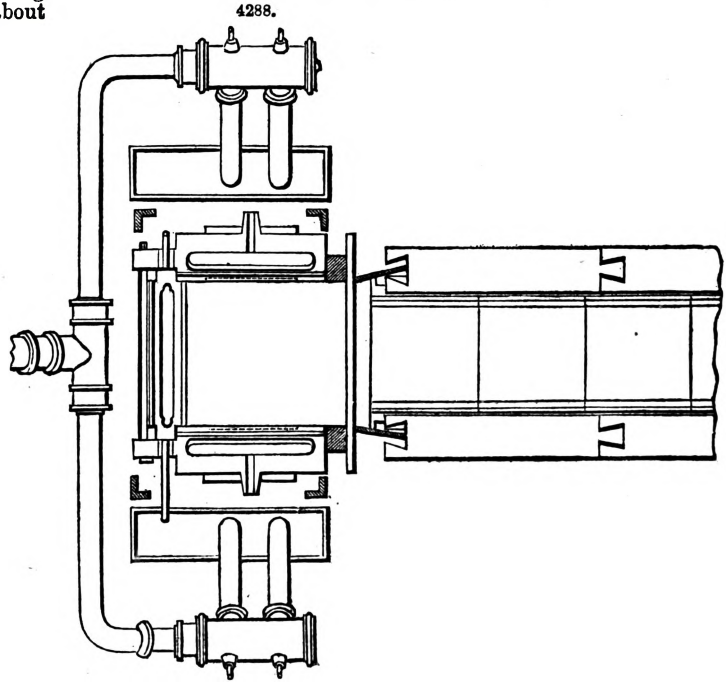

Fig. 4290, about 2½ ft. high, are hung to the side frames. Through these doors the working operations are carried on.

At a sufficient distance below the inside floor of the refinery, and a few inches in advance of

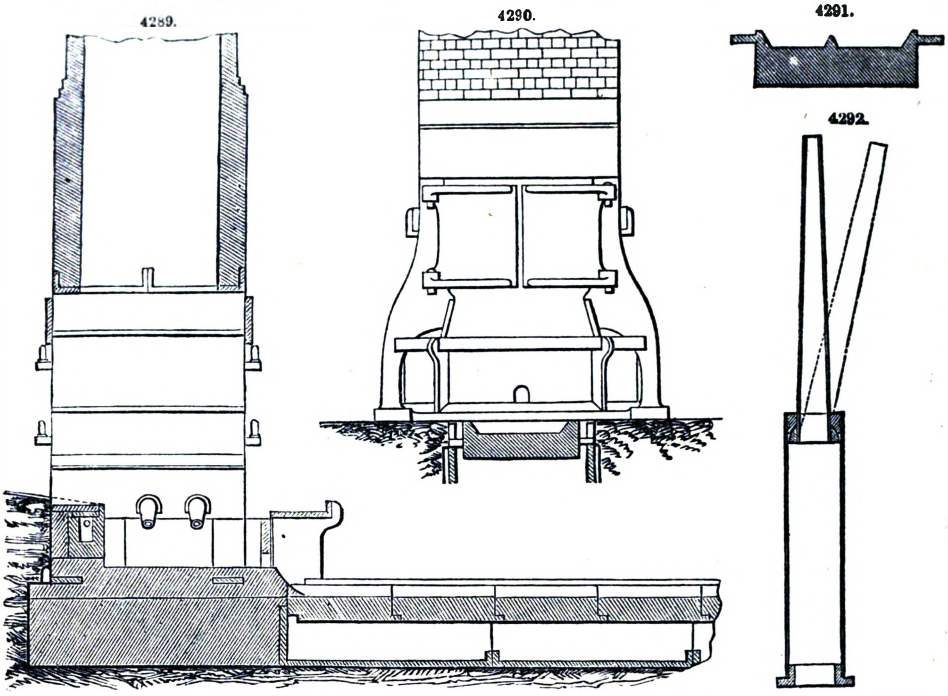

the dam-plate, the casting bed or pig-mould is constructed. A brick, or what is better, a cast-iron cistern, about 30 ft. long, 4 ft. wide, and 2 ft. deep, forms the substructure. The casting bed is composed of thick cast-iron blocks, about 3½ ft. wide, the same in length, and 6 or 8 in. thick, having flanges at each side to rest on the edges of the cistern underneath, and sloping flanges on the upper surface, to restrain the fluid metal within the desired limits. When in working order the cistern is filled with water to within an inch or two of the mould-blocks, and is maintained at this level by a small stream, the superfluous water escaping by an overflow notch. The jointing of the mould-blocks to each other is done with care, that no metal may penetrate into the cistern below; a thin stratum of fire-clay between them generally suffices for this purpose. The blocks are maintained in close contact by stout clamps taking hold of corresponding snags cast on the sides of the moulds.

The mould-blocks, Fig. 4291, are also made with a flange running down the centre, dividing the plate of metal into two widths; and to reduce still further the labour of breaking it up they are sometimes constructed with longitudinal grooves for receiving the metal, the dimensions and length being very similar to those of the moulds prepared in the dust-bed of the blast furnace for forming the original pigs.

The blowing arrangements usually consist of two or three small nozzle-pipes, Figs. 4287, 4289, at each side. Each pipe is furnished with a suitable stop-valve for regulating the supply of blast. The connection between the metal nozzle-pipe and the fixed blast-pipe containing the valves is generally made by a leather bag fastened at the ends around the pipe by screw clamping glands. The leather bags, however, may be dispensed with, and their place supplied by telescope pipes having a cup-and-ball joint, Fig. 4292, as a provision for any variation that may be required in the lateral and vertical direction given to the blast.

Refineries are also constructed with a single pipe at the back; the framework, water-blocks, mould, and other parts, are then of a lighter description, and the fire is altogether of much smaller dimensions. Other refineries are constructed with two and sometimes three pipes at the back. They are known as single refineries, while those having two sets of pipes, one on each side, as in the fire we have described, are known as double refineries. The double fires are generally blown with two or three pipes on each side, but four may be seen at some works.

Refineries are also distinguished as melting-down and running-in fires. The former melt cold pigs from the blast furnace, old castings, and scraps, while the latter work on hot fluid metal run direct from the blast furnace.

The melting-down refinery is usually in a building by itself at some distance from the blast furnace. The running-in fire is erected immediately contiguous to the blast furnace, from which the crude iron, on being tapped, flows into it.

The operation of refining crude pig iron is conducted nearly as follows;—The floor of the fire is strewn with some broken sandstone, and a fire is lit in the centre. A quantity of coke is filled in, and a light blast directed upon it. A charge of pigs, scraps, or broken castings is next placed on the ignited coke; a fresh charge of fuel is heaped on the pigs, and the full power of the blast brought into action. The weight of pig iron or other metal charged will vary with the size of the

fire, but may be taken at 2 tons, and the coke for the same at 5 cwt. An intense heat is soon produced; the broken sandstone on the floor melts, and glazes the surface of the hearth. In the course of about an hour the metal begins to melt, dropping through the coke to the hearth; in about two hours or two hours and a half the whole of the iron is melted and lies under the coke. The blast is still kept up, fresh coke is added, and the metal heaves and boils from the evolution of gases. The process is continued until the whole being sufficiently decarburized, the fluid metal is tapped into the cast-iron mould-bed. To render it more easy of removal from the mould, small dams of cinder are placed across at convenient distances, thinning the plate metal at such places sufficiently to render its separation easy.

The iron and cinder escape together from the refinery into the mould, but from its inferior specific gravity the great body of the cinder rises and collects on the surface of the plate. This separation of the metal from the cinder is stimulated by throwing water on the fluid metal immediately that the entire charge has left the refinery. The sudden cooling caused by the water renders the metal very brittle, and facilitates its subsequent breakage into pieces fit for the puddling process.

The time occupied in the operation of refining each fireful will average about three hours. White forge iron is not blown so long as grey pigs; the latter often require three and a half to four hours to be properly refined. Castings take still longer; the large and irregularly-shaped pieces to be melted frequently require nearly twice the usual quantity of blowing to effect their reduction.

With the running-in refinery the operation is different, since the metal is charged, or more correctly speaking, run into the fire in a fluid state; hence the time occupied in melting it is saved. These fires are consequently enabled to refine a larger quantity in a given time, and are also worked more economically in their consumption of labour and fuel than the others.

A few pounds of the cinder from previous refinings are added in operating upon such irons as are smelted with less than the usual proportion of cinder in the blast furnace. By the addition, in moderate quantities, of a good cinder the work is hastened and the yield of iron improved. In this, as indeed in every other operation, the presence of cinder in moderate quantities is highly beneficial; when it is produced in small quantities the operation becomes more difficult, the quality variable, and the yield generally bad.

The bottom of the hearth, from the intense heat of the fire and the force of the blast being directed on it, is burnt away in a short period, and usually requires repair once a week. Brick bottoms are used at some works; and the practice of repairing the hearth by covering it with a course of bricks weekly is also practised to some extent. For durability, however, a sandstone bottom of millstone grit is superior to all others.

For conveying the blast into the hearth small wrought-iron tuyeres, Figs. 4293, 4294, are used, having their smaller orifice $1\frac{1}{2}$ or $1\frac{5}{8}$ in. diameter, and the larger $3\frac{1}{2}$ or 4 in. A $\frac{1}{4}$-in. or $\frac{5}{8}$-in. pipe is screwed into the upper end as an inlet-pipe, and a similar one as an outlet for the water. The inlet-pipes are connected with a small cistern, placed 3 or 4 ft. above the tuyere; the outlet-pipes discharge the water into the side blocks, from which it enters the rear block, and finally is conveyed by a small pipe to the cistern under the mould-bed.

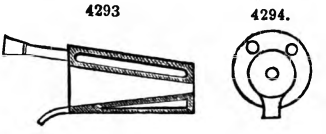

The nozzles of the blowing pipes, in double refineries, where four are employed, are usually $1\frac{3}{8}$ in. diameter, or if of another section, are equal in area to a circular pipe of this size. A pipe flattened at the point, so as to increase the horizontal surface of action, is considered by some refiners as superior to the circular form. The angle which the direction of the issuing blast makes with the bottom is a matter of some importance. The best

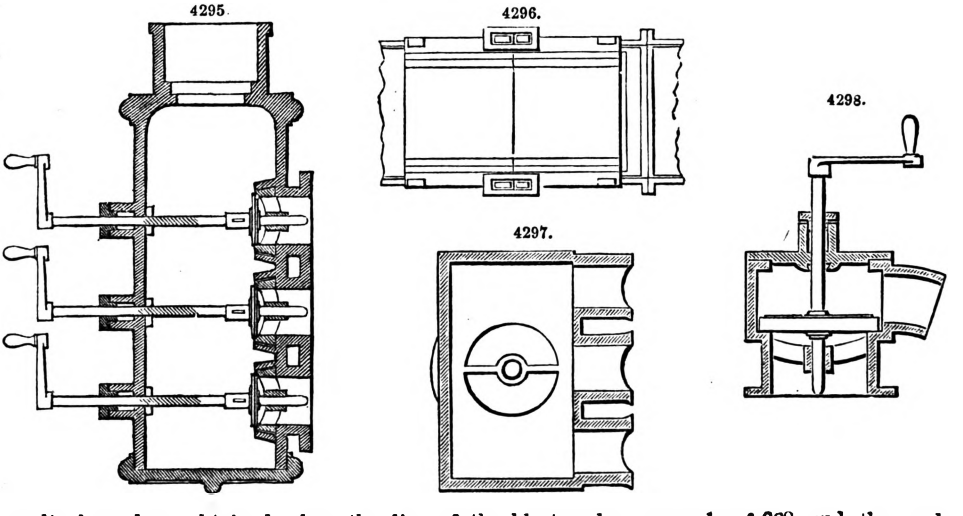

results have been obtained when the line of the blast makes an angle of 38°, and the angle enclosed by the two streams of blast 105°.

Fig. 4295 is a section of a blast-valve box, with three separate valves for three tuyeres; Fig. 4296, a pig-mould, jointed with clips; Figs. 4297, 4298, sections of blast-valve box, for three

tuyeres with simple valve; Figs. 4299 to 4301, pig of refined metal, on cart commonly used to remove it; Fig. 4302, pig-mould blocks, with double-rabbeted joints; Figs. 4303, 4304, two-handed sledge for breaking refined metal; Figs. 4305, 4306, scraper; Fig. 4307, spanner for breaking refined metal.

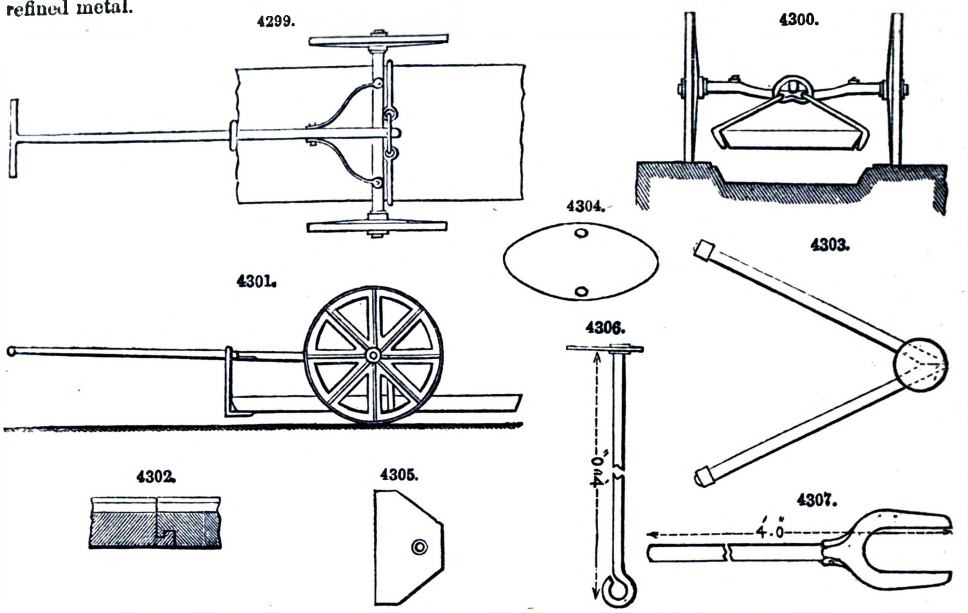

Theory of the Refining Furnace.—The operation of refining is a combination of chemical and mechanical processes, by means of which the metallic alloy is deprived of a portion of the extraneous matters contracted in the blast furnace. The crude iron contains various substances in mixture; generally the most important consist of carbon, silicon, and aluminium, as will be seen by referring to the analyses. It is the province of the refiner to extract from it the larger portion of these impurities preparatory to its conversion into malleable iron.

For this purpose the crude iron is fused in the refinery fire, along with coke or charcoal, as before described, and there kept at a liquid heat for a short period by means of numerous small jets of air. In the blast furnace the atmospheric air delivered through the blast-pipe is required for the maintenance of combustion. In the refinery the blast answers a double purpose. It creates and maintains an intensely high temperature, fusing the crude iron with great rapidity, and promotes the rapid oxidation of the impurities. But in this process a considerable quantity of metal is also oxidized, and this, in combination with a portion of earthy matter, forms the refinery cinder. Hence, of the oxygen of the blast delivered into the refinery, the larger volume unites with the carbon of the fuel, forming carbonic acid, and ascends into the atmosphere—a minor volume combines with the metal oxidized, forming oxide of iron (still another portion unites with the carbon contained in the molten crude iron, forming also carbonic acid, and escaping in a similar manner), while the remainder unites with the other substances, forming silica, alumina, &c. The separation of the various impurities is further facilitated, as in the hearth of the blast furnace, by mechanical subsidence. Specifically lighter than the metal, they float on the surface, united in definite proportion with oxide of iron, and to a partial extent protect the lower stratum from further oxidation during the process.

The decarburization and consequent refinement of the crude iron may be effected by fusion and oxidation in reverberatory furnaces without the intervention of a blast; but, since the blast expedites the operation, and results in a superior yield for the same degree of refinement, it is generally preferred.

The fracture of the refined plate metal when cold is white and dense at the bottom, but is of a honeycombed or cellular structure at top. The depth of the honeycomb is affected by the quality of the iron and length of blowing. If the metal is from ordinary forge pigs, and the blowing has been conducted an average time, the depth will be from 1 to 1½ in.; but if the plate is from good grey pigs, it probably will not exceed ½ in. By the reduced depth of the honeycomb and the bright silvery lustre presented by the metal, the general quality of the pig iron used in its manufacture may be pretty accurately determined.

Charcoal Finery, or Lancashire Hearth.—We are indebted for the following accurate account of this important finery to Dr. Percy, who gives it in his work on Iron and Steel;—

The furnace, Figs. 4308 to 4310, consists essentially of a shallow quadrangular hearth, formed of cast-iron plates *a*, *b*, *c*, *d*, and *e*. The hearth bottom *a* is horizontal; the tuyere side *b* slightly inclined inwards; the opposite side *d* and the back *c* inclined outwards; the front *e* is vertical, and in it there are three round holes for tapping off the cinder. Under the hearth bottom is an open shallow cast-iron box, having a gutter on one side *f'*, and a round hole in the centre of the bottom *f*, surrounded with a border not quite so high as the box is deep; the box and gutter are cast in one piece. During the working of the furnace, cold water is continually flowing through *f'*, and running out at *f*. By this arrangement the hearth bottom is kept cool. The side walls above

the hearth are protected within by cast-iron plates, Figs. 4308, 4309. Hot blast is used, and there is one iron water-tuyere *i*, nearly semicircular in section, which passes through a thick cast-iron plate set in one of the side plates *g*. The narrow end projects over the side of the hearth ¾ in., and the axis is inclined at an angle of about 10° with the horizon. As the charcoal is piled round and above the tuyere, the plate *g* is exposed to great heat, and consequently destruction; it is made very thick, and may be readily replaced when required. In front of the hearth is a table or platform of cast iron *h*, resting at the ends on cast-iron standards. This table is essential for the necessary manipulations. The arrangement for heating and conveying the blast to the tuyere is represented by *k*, *k'*, *k''*. The heating apparatus consists merely of a siphon-pipe of cast iron, set horizontally and exposed to the waste gases of the furnace. There is a throttle-valve at *k* for stopping and regulating the blast. The nozzle end of the blast-pipe may be raised or lowered at will by a telescope sliding-piece, and may be turned in any direction by means of the union joint below *k*, Fig. 4310. The waste gases escape partially through the square opening *l*. At *m* is a cast-iron plate on which pigs or blooms may be laid, so as to become heated. At *n* is an opening through which an iron bar may be introduced to move the objects on the plate *m*, or clean the arched passage leading from this part to the stack *o*, to which at the bottom is often attached a large chamber destined to intercept sparks. There is an ash-pit *p*, from which the ashes may be removed through an opening at *p'*, which is closed with a cast-iron door.

4308.

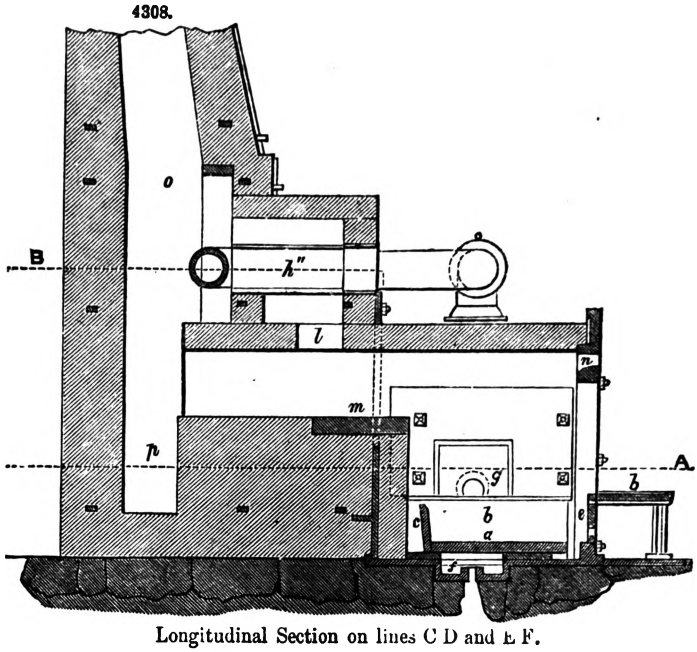

Longitudinal Section on lines C D and E F.

4309.

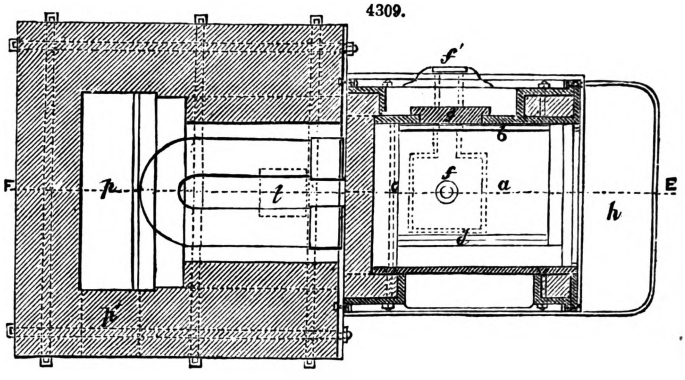

Horizontal Section on line A B.

All being in working order, and the ball obtained in the previous heat removed, charcoal dust is spread out on the fore side, and the hearth is filled with clean charcoal. The pig iron, which is in plates 2 in. or 3 in. thick, and has been previously heated on the plate in the flue, is transferred to the hearth, the charge being 200 lbs. Fresh charcoal is added and the blast turned on, when, in about half an hour, the metal will have completely melted down, and in dropping through the blast from the tuyere have become partially oxidized. By the action of the oxide of iron thus formed, and of the basic silicate of protoxide of iron remaining in the hearth at the close of the last operation upon the molten pig iron, the latter is decarburized to a considerable extent, and,

4310.

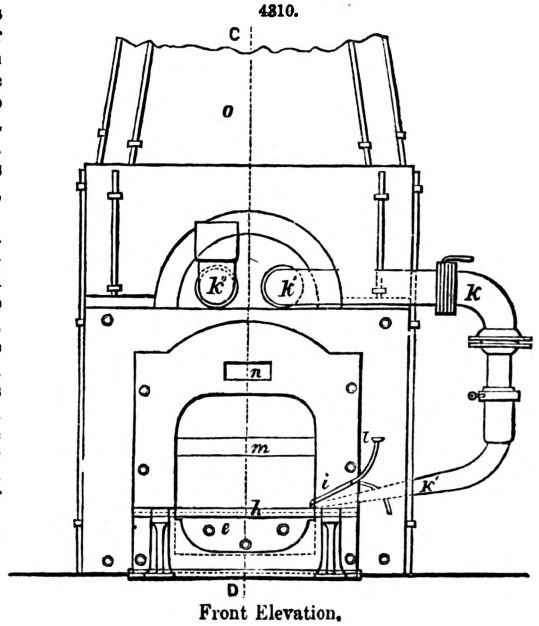

Front Elevation.

in consequence, becomes less fusible and more pasty. After perfect fusion of the metal, the refining proper begins. This consists in incessantly breaking up the metal with an iron bar, and carrying towards the tuyere the raw portions, which, being more highly carburized, and more fusible than the rest, always run down to the bottom, and there harden. The metal, which has thus more or less solidified, is broken up and submitted to the action of the blast until all is sufficiently refined; this operation lasts about half an hour. Subsequently all the metal is brought up to the top of the hearth, and again melted down with a lively heat to form the ball, fresh charcoal being thrown into the hearth, and the unmelted portions being kept up at intervals with an iron bar to prevent their adhering to the ball before having been melted. The ball is then taken out and hammered into a prismatic shape, which is cut into pieces to be welded in another fire. The whole process lasts from 1¼ to 1½ hour.

The blast is frequently used at a temperature of 100° C., and at a pressure of 2½ in. of mercury.

The cut-up pieces to be drawn out under the hammer are welded and heated in hearths much resembling in size and construction the charcoal finery itself, or in an Ekman's furnace, now extensively used for this purpose.

Walloon process, employed at Dannemora, Sweden. The Dannemora irons have generally a fine grain, unequal in size, and composed apparently of hard and soft particles; but in ductility and tenacity the strength of this iron is very remarkable, it has the peculiarity that when heated it becomes very soft and full of fibre; and when cemented and cast into steel, the inequalities of fracture entirely disappear.

The hearth in the Walloon process is composed of cast-iron plates. The bottom plate is 2 in. thick, and underneath is a strong bed of pounded slag about 3 in. in depth, which rests upon a cast-iron box provided with suitable channels to drain off water. The tuyere side plate inclines somewhat into the hearth, and the opposite side plate, on the contrary, considerably more outwards. From the centre of the tuyere to the back plate the distance is from 10 in. to 11½ in., and to the commencement of the work-plate it is from 22 in. to 24 in. The front of the hearth is enclosed by a brick wall, within which is the fore plate inclining outwards, and on the top of which the work-plate lies horizontally. This wall is a little higher than the back wall, and does not contain any tapping hole, as the slags are never let out. From the tuyere side plate, on a level with the tuyere, the distance to the opposite side plate is from 22 in. to 24 in. The axes of the tuyere and blast-pipe are at right angles to the tuyere side plate; and as this inclines forward a few degrees into the hearth, they have the same inclination. The nozzle of the tuyere is semicircular, with the flat side at the bottom; it is from 20 to 25 lines broad, from 16 to 17 lines high, and projects 3½ in. from the tuyere side plate. The nozzle of the blast-pipe is likewise semicircular, and is somewhat larger than that of the tuyere, so that it lies back within the latter 4 in. The depth of the hearth under the tuyere is from 7 in. to 8 in., under the upper edge of the back plate from 14 in. to 15 in., and under that of the work and adjoining side plate, opposite the tuyere, from 15 in. to 18 in. The fuel is fine charcoal, and this hearth works extraordinarily hot as compared with all others. Cold blast is used.

The iron employed is white or strong mottled, and is in long pigs about 9 in. broad, from 15 ft. to 18 ft. in length, and from 3 in. to 4 in. thick at one end, and from 1 in. to 2 in. at the other. The pig is placed at right angles over the back plate, with one end inclining downwards over the tuyere; and as this end melts, the pig is gradually pushed forward, so as to keep the end in the same position. Usually two such pigs are put one over the other.

The fore part of the hearth being filled with moistened small charcoal, and the remainder with charcoal, the fire lighted, and the blast let on, the pigs are pushed forwards; and in order to produce a sufficient bath of slag, some large finery-scraps, or several shovelfuls of hammer-slag, are melted down.

A peculiarity of the Walloon process is that at the beginning of the heat the bloom obtained from the last lump is held with tongs, as steeply inclined as practicable, in part of the hearth, and reheated preparatory to further manipulation.

The working with the iron bar or staff commences immediately after fusion of the first portions of the pig iron, and is regularly continued until the whole of the metal melted down on the tuyere side has been once brought up from the bottom and that side towards the middle of the hearth, and so exposed to the action of the blast. It is also worked once to the left and once to the right of the bloom undergoing reheating. The melting of the pig iron takes place pretty quickly, about 70 lbs. being melted in twenty minutes. Owing to the facility with which this kind of pig iron comes to nature, or arrives at the state of malleable iron, and the continual working with fresh staffs, the metal which has been fused is by that time so far refined that thin pieces of malleable iron will be seen adherent to the staff. The whole of the molten metal is now completely broken up above the tuyere, melted down, and formed into a lump; and during this part of the process the supply of fresh molten pig iron from above should obviously be stopped. The lump is about 12 in. broad and 15 in. long. The average period between the completion of one lump and another is twenty-eight minutes, the extremes being twenty-five and thirty minutes. Each lump is heated from six to eight times in the course of being drawn out into a bar 12 ft. long, and the weight of the bar from each lump is about 60 lbs. The shift lasts eight hours. Two finers and one assistant are required for each hearth.

It is evident that in this process the pig iron is exposed to conditions favourable to rapid decarburization by oxidation, namely, the small quantity of iron operated upon at a time, the comparatively large size of the hearth, the high temperature, the large amount of blast, the gradual melting of the pig iron drop by drop before the blast, and the almost incessant working of the metal.

Franche-Comté Process.—Franche-Comté is the name of an old province in the east of France, and the process has acquired its designation from having been long practised, if not originated, in that locality, whence it was imported into Germany and Sweden.

The hearth is composed of five cast-iron plates. All these plates are rectangular, except that of the tuyere side, which is occasionally not so high on the side of the back plate as on the side of the fore plate, in order that when there are two tuyeres the hind one may be set a little below the front one. The fore plate is from 0m·02 to 0m·03 (0·79 in. to 1·18 in.) thick, and the others from 0m·06 to 0m·07 (2·36 in. to 2·76 in.) thick. They last during several months, except the bottom plate, which must be renewed every week, and sometimes more frequently; but the hearth is so constructed that this renewal may be effected by simply taking down the fore plate.

The hearth should rest on a brick or stone foundation, covered with a layer of clayey soil well beaten down; and if there is danger of moisture, this may be completely avoided by setting it in a cast-iron box. In order to prevent the bottom plate from becoming too hot, in which case the fining process would be retarded, it is placed on a small iron frame, 0m·5 (1 ft. 7·69 in.) long, by 0m·2 (7·87 in.) broad, and 0m·27 (1·07 in.) thick, so that by means of an old tuyere a little water may be made to flow into the space between this plate and the ground; but this should not be done until just after the lump has been taken out, for otherwise the great heat of the hearth might crack the plate.

The back plate is set between the tuyere side plate and the opposite one, and the fore plate also rests against these two plates, but standing upon the bottom plate. The back and fore plates are always fixed vertically. The tuyere side plate is sometimes vertical, and at others slightly inclined towards the interior, especially when it is intended to treat dark grey pig iron, which only melts at a high temperature, this inclination bringing the blast closer to and concentrating the heat upon the pig, which is pushed forward as in the *Walloon* process. The side opposite the tuyere is formed either of a single piece, always a little concave, or of two pieces of cast iron, one supported upon the other, the upper one resting upon a brick wall, and the lower one forming with it a very obtuse angle. Almost always this side leans a little inwards, in order to prevent loss of heat; sometimes it is quite vertical; and rarely it leans a little outwards, so as to facilitate the withdrawal of the lump when of very large size. The bottom plate is inclined both towards the side opposite the tuyere and the fore plate—an arrangement which is essential in order that the cinder may flow easily through the tap-hole situated on the tuyere side. This double inclination is given by means of small pieces of iron placed at the angles of the plate, or under the small frame on which it rests. The various plates are fixed most solidly together with wedges of iron. The hearths are preferably blown with two tuyeres. The tuyeres are of copper, and should last nine or ten months. With hot blast, cast-iron water-tuyeres are employed, but when the temperature of the blast does not exceed 200° C., copper may still be used, although they require more frequent renewal than with cold blast. The muzzle or eye of the tuyere is semicircular, 0m·027 (1·07 in.) by 3m·024 (0·95 in.), when the hearth is blown with two tuyeres. The eye has been made very flat, 0m·040 (1·58 in.) long by 0m·010 (0·39 in.) high, in order to compel the blast to spread in a sheet, and this has been attended with advantage. When there are two tuyeres they touch each other outside the hearth, but in the interior they are a little separated.

Most of the hearths are covered, either with an arched roof to prevent loss of heat, or by a flue conducting the waste flame into a furnace or an oven, where it is utilized.

Certain changes are made in these hearths according to the quality of the pig iron to be treated; they consist chiefly in increasing or diminishing the depth of the fire, the inclination of the blast, and the projection of the tuyeres into the interior.

Large-grained grey pig iron, with graphitic scales, is usually treated by this method, and only occasionally mottled and white pig iron. All the pig iron consumed is made from pisolitic iron ores, occurring either in the upper tertiary beds, or in deposits derived from those beds, and yielding from 33 per cent. to 36 per cent. of pig iron.

Manipulation.—The pig iron is supplied to the hearth exactly as in the Walloon, and gradually melted, the molten metal trickling down in drops through the strongly oxidizing blast. After the removal of the lump or ball in the last heat, the rich cinder which may have accumulated at the bottom is raised up; the bottom is well fettled with small charcoal, and the pig is then pushed forward over a roller, with its end inclining somewhat downwards. The pig ought to be so placed that the distance between it and the side facing the tuyere is only 0m·03 (1·18 in.) or 0m·04 (1·58 in.), in order to promote as much as possible the action of the blast upon the pig iron, allowing it, however, to ascend to the top of the fire. The bottom of the pig also should be 0m·1 (3·39 in.), 0m·12 (4·73 in.) above the stratum formed by the blast, and its extremity should not be more than 0m·06 (2·36 in.) beyond the axis of the tuyere in front. In this position the pig melts drop by drop, and this is essential to success.

Before filling up the hearth with charcoal, pieces of rich cinder, intermixed with hammer-slag, are placed upon the pig on the side farthest from the tuyere. These slags, which quickly melt, are intended to form a bed upon which the metal dropping from the pig, during the whole period of fusion, should rest, as well as the bath of poor slag, which ought to cover the product of that fusion, and preserve it from the action of the blast. Moreover, when the hearth has been filled with charcoal, a shovelful or two of hammer-slag is thrown on the top. A finery of this description, when in good working order, consumes all the rich slag which it produces; only the poor, containing about 60 per cent. of protoxide, or 46 per cent. of metallic iron, being thrown away.

The ball is shingled or forged under the hammer into a bloom which is cut into two equal and similar pieces. During numerous heatings and reheatings under the tuyeres, occupying about 1½ hour, these pieces are separately forged each into a bar with two heads, and the forging completed by melting the four heads into one mass.

Boiling and Puddling Pig Iron.—In converting the crude iron of the blast furnace into malleable iron upon an extensive scale, two modes of procedure are open to the manufacturer, either to refine the crude iron in the finery fire, and then pass it through the puddling process; or, to put the crude iron through a modification of the puddling process termed boiling. Each method possesses certain advantages, but where quality is the sole consideration, the process of refining and puddling

is entitled to the preference. Upon the merits of the two systems ironmasters do not generally agree. By some the boiling process is held to be fully equal and more economical than refining and puddling; on the other hand, it is maintained that boiled iron is more subject to be red-short. In several works both methods may be seen in operation, but where this occurs the larger quantity of iron is first passed through the refinery. Hence, in such instances it would appear that while boiling a certain quantity of pigs is considered advantageous, it is not desirable that the manufacture of the entire quantity of crude iron should be conducted in this way.

Fig. 4311 is a section of a boiling furnace; Fig. 4312 a sectional plan; and Figs. 4313, 4314, front and back elevations.

The furnace is constructed with an outside framework of cast-iron plates, about 12 ft. long, 5 ft. 6 in. wide inside, and 6 ft. high. Of this height 9 or 10 in. will be below the floor line of the forge. At one end the side plates are bolted to an iron framing carrying the chimney-stack; at the other they are attached to a cross plate of lesser depth, below which an ash-pit is formed, 2 ft. deep, and of nearly the same length and breadth as the iron framework. The fire-place is generally of such a size that the superficial area of the grate shall be from 8 to 12 ft., varying with the quality of the coal to be employed. Three or four inches above the level of the bearing bars of the grate there is fixed horizontally a cast-iron plate, nearly equalling in width the distance between the side plates, and extending from the fire-place to the stack framing. This is supported at short intervals by stout bearing bars, resting on angle-pieces, bolted to the side plates. Upon this plate, which is called the bottom, a fire-brick furnace is built. The breadth is about 3 ft. 9 in. at the fire end, and it runs parallel for about two-thirds of its length, when it begins to diminish, till at the stack end it is contracted to 16 or 18 in. The arched roof above the bottom is about 27 in. high at the fire end. It falls throughout its length usually, but in all cases a sharp descent occurs close to the stack, where the under side of the roof in the narrow flue is brought down to within 10 in. of the level of the bottom; from this point it is carried level for 9 or 10 in. to its junction with the vertical flue of the stack.

4311.

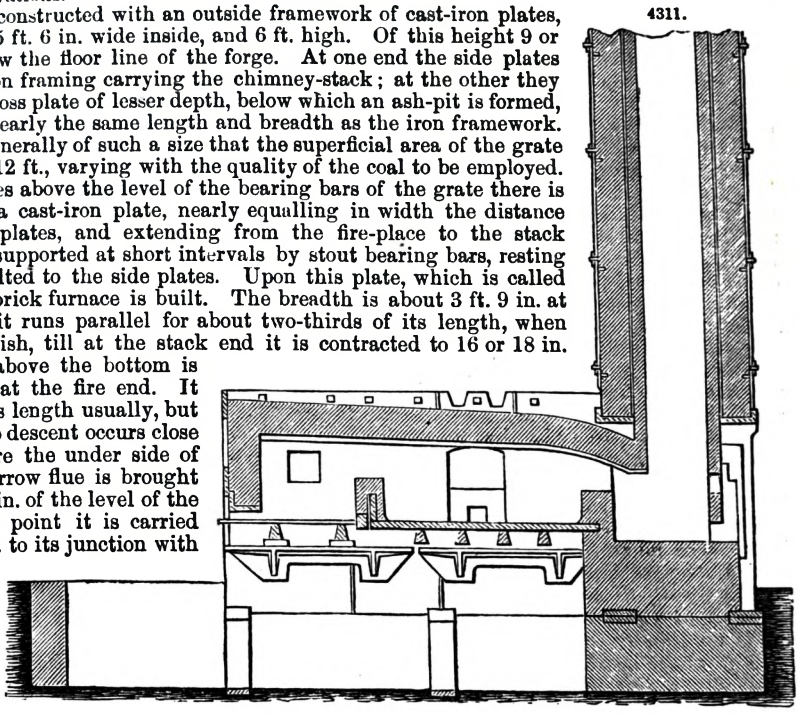

The length of the fire-place having been determined, a brick bridge, 14 or 15 in. thick, is built on the extreme end of the bottom plate, and carried up to within 10 or 12 in. of the roof. At the stack end, where the furnace is contracted to its narrowest dimensions, a second bridge of fire-brick, about 9 in. in thickness and 10 or 12 in height, is built to restrain the metal from flowing into the flue. When finished, the body of the furnace measures about 6 ft. long, 3 ft. 9 in. wide, by 2 ft. high to the centre of the roof. On one side a doorway, about 16 in. square, is formed, for charging and working the crude iron. The height of the bottom of this doorway above the bottom plate is of some importance. The average height at several works is 10 in., the lowest being 8, and the highest 11 in. As the height of this doorway is determined before casting the side plates, it regulates the height of the bottom and also of the roof of the furnace, especially at the end next the stack, where the general rule is to have the under side of the arch level with the lower side of the doorway.

4312.

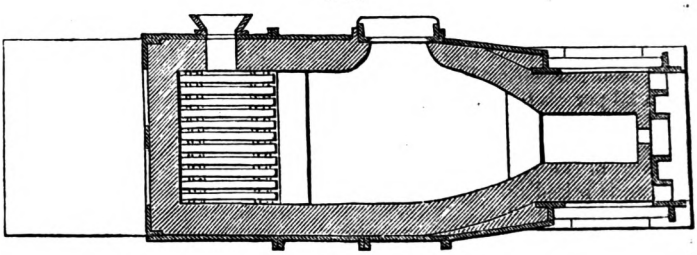

4313.

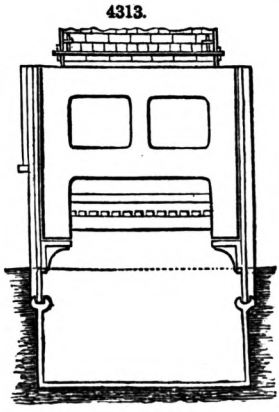

4314.

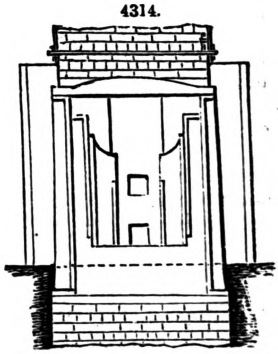

The metal forming the lower edge of the doorway is subject to wear by the constant pressure

and friction of the iron working bars of the puddler; to prevent this as much as possible a loose plate, Fig. 4311, about 1½ in. thick, is bolted on to it, which can easily be renewed when necessary. The cast-iron door is lined inside with fire-brick, and is made to slide up and down between strong cast-iron flanges by means of a rod connected to a counterbalanced lever. For the convenience of working, and for the protection of the puddler from the intense heat, a small slit, about 3½ in. wide by 5 in. high, is left in the under side of the door; through this the working operations are principally carried on. To prevent the sides and upper edge of this slit from being enlarged by constant wear, the metal around it is hardened by being cast in metal chills.

This, the working door, is situated rather nearer the fire-bridge than the flue. In the wall left on the side of it next the flue a second doorway of smaller dimensions than the working door is used for charging the metal, where this is done before the previous heat has been withdrawn. This charging door is usually about 10 in. by 13 in., and 12 or 13 in. above the bottom plate, having a lever and balance-weight for lifting it similar to the working door. Both are often used in boiling furnaces, but generally a single door suffices. In puddling furnaces, however, they are generally adopted.

A doorway, about 10 in. by 10 in., is also left opposite the fire-place; it has a cast-iron mouthpiece, but no door, the mode of firing rendering this unnecessary. At the stack end a small aperture, about 4 in. by 6 in., is provided for the escape of any cinder that may pass over the bridge into the flue. A small fire is kept burning over this aperture, in a grate secured to the outside frame of the stack, to keep it open for the passage of the cinder, and to maintain the latter sufficiently fluid.

The chimney-stack is built of fire-brick. For the generality of forge coals it is 30 ft. high above the cast-iron framework, or altogether 36 ft. The interior flue is made about 24 in. square, but at its junction with the roof of the furnace it is contracted to about one-third of this area. This contraction is regulated partly by the skill of the workman, but principally by the qualities of the coal. The size of the flue in this place is occasionally as small as 17 in. by 9 in., with a coal approaching nearly to the character of anthracite. With a more inflammable coal it has been 18 in. by 18 in. The chimney walls are usually built 1½ brick thick for 14 ft., 1 brick for 10 ft., and half a brick the remaining 6 ft. The intense heat in the chimney destroys the lower courses in a comparatively short period. To facilitate the repairs of this part a lining half a brick thick is carried up, without binding with the other work, for about 20 ft. When necessary this is drawn down and rebuilt without interfering with the stability of the stack.

The top of the chimney is surmounted with a light cast-iron framework fitted with a damper for regulating the draught. This damper is opened and shut by a lever, from which an iron rod or chain descends to the workmen below. A different mode of regulating the draught is sometimes adopted, but of this plan we shall have to speak hereafter.

The effects of the expansion and contraction of the brickwork by the alternate heating and cooling are provided against by numerous iron binders built in, the projecting ends of which are punched or cast to receive vertical wrought-iron rods, which are keyed up tight against the brickwork by iron wedges at their backs. Unless the light chimney-stacks were well bound together they would not long remain upright under the straining to which they are subjected. Imperfectly bound stacks may be seen in every work inclining at angles more or less dangerous to their stability.

The immense strain exerted by the expansion of the brickwork of the roof has also to be met by a number of strong wrought-iron bolts at the top and bottom of the side plates. For ordinary furnaces these should not be more than 2 ft. 6 in. apart when the bolts are 1½ in. square. The plates may also be strengthened by vertical ribs on the outside face; if this be done the risk of their breaking in the middle—a very frequent occurrence—will be nearly removed. In some works the binding is composed of wrought-iron looped straps at top and bottom with vertical connecting bolts, also of wrought iron; by this arrangement the direct strain on the side plates is greatly reduced and their durability consequently increased.

The plate in which the doorway for feeding the fire is situated, commonly called the stock-hole plate, is the least durable of the whole. The stock-hole is usually a square with sharp angles; after a few weeks, sometimes only a few days, the plate breaks across one or more of these angles. This is doubtless caused by the unequal expansion and contraction of the surface, but a remedy has not yet been discovered. The angles have been rounded off without effect. In other cases wrought-iron looped clamps have been cast in the metal across, and at right angles to the general direction of the fracture, but without adding greatly to the durability.

The process of boiling is thus conducted;—The bottom of the furnace is covered with some broken cinder from previous workings, and mill scales, and a fire is lit in the grate. In from ten to twelve hours with new furnaces (five or six is sufficient with old), the interior of the furnace will be at a white heat, the cinder melts, and flowing over the bottom protects it from the fused iron and intense reverberatory action of the roof, and fills any crevices in the edges of the brickwork. The draught is now slacked a little, about 30 or 40 lbs. of cinder are charged at the flue end, and the quantity of pigs to be operated on, technically called a heat, generally 4¼ or 4½ cwt., is charged in pieces of convenient size—30 to 40 lbs. is best, and the more uniform the better. The charge is distributed upon the bottom of the furnace, the door closed, and the admission of cold air is prevented by throwing a little small coal or cinders around its edges, and filling up the notch with a lump of coal, covering it with a small iron plate. The damper is opened to its full extent, fresh fuel is added in the grate, and the fire is strongly urged. From the peculiar form of the roof the heated products of combustion are deflected on the pigs, and the extremity of the roof being placed low they are compelled to pass in close contact with the entire charge.

In about a quarter of an hour after charging, the puddler throws in about 60 or 80 lbs. of the cinder expelled by the rolls from mill bars; where these cannot be obtained recourse is had to the cinder from rolls, rolling puddled iron bars. The cinders which are drawn from under rolls

working on boiled iron are of inferior quality, and are never used in the boiling furnace if others can be procured. They contain a larger percentage of silica, and are less fluid; the time occupied in the boiling process consequently is lengthened whenever they are used, and it is believed with some reason that the quality of the resulting iron is inferior.

When the pieces of pig approach a red heat the puddler directs his attention to their position; those in the coolest parts of the furnace are shifted forward to the hottest, and those in the hottest to the coolest, the object being to bring the different pieces simultaneously to the melting-point. Unless this is accomplished the waste of iron and loss of time will be considerable.

The working door is now made fast by tightly wedging it into the frame. In from twenty-two to twenty-five minutes after charging, dependent in great measure on the quality of the coal, the edges of the pigs begin to melt; in another five minutes they are softened and apparently adhere to each other and the bottom. The puddler now raises them and turns them over to expose them equally to the heat and prevent their adhering together, which would obstruct their melting. At this stage it is common to charge two or three lumps of coal next to the flue-bridge, and about 15 lbs. of cinder for the protection of the brickwork in this quarter. Thus far the fire has been urged to its utmost power, the second hand adding fresh fuel every few minutes and maintaining a clean grate and free draught.

In thirty minutes from the time of charging the iron is all melted, and the most laborious operation of the puddler commences. He puts in the rabble, and rakes up the fluid iron fore and aft, and raises the lower portions to the surface. At this point the energies of the puddler and his second hand are taxed to their utmost, both labouring at the raking up and stirring of the metal.

The fluid iron boils violently, and rises spontaneously nearly to a level with the lower edge of the door; its surface is dotted with innumerable eruptions, caused by the escape of gaseous matter. In five or six minutes after the boil begins the damper is partially lowered, checking the draught and reducing the heat within the furnace. The effect of this reduction of heat is immediately seen; the iron becomes evidently thicker and more pasty; now, too, it adheres to the tools, and has to be removed by a hammer. The raking up of the metal from the bottom is continued unceasingly; the small door is opened, and the parts next the flue turned over along with the rest.

This working of the boiling metal continues for about eighteen minutes, at the end of which time the fluid iron has the appearance of a quantity of dirty snow. The continual raking motion has resulted in the evolution of the carbon and the separation of the iron from the cylinder, which now flows over the bottom apparently as fluid as water.

The period for balling up now arrives; a few pounds of wet scales from the cooling bosh are thrown in. Their introduction causes an immediate reduction of temperature, which is increased by the puddler towards the end of the period of pasty condition desired. After eight or nine minutes' raking of the iron, now in the condition of pasty lumps, but which require to be constantly stirred to keep them from running back to the form of boiling iron, the puddler commences to form the puddle-balls. The number of these depends on the iron charged and the ability of the workman. Five or six is usual, but seven or eight may be seen brought out. The puddler commences by raking together such a quantity of the pasty iron as he conceives will suffice for a ball, and placing it a little aside in the furnace. He then proceeds with the remainder in a similar manner, keeping the iron together, and shaping his balls by the help of the leverage which he has with the iron bars, the slot in the door acting as a fulcrum. When the balls have been roughed out, the damper is nearly closed. This is done so that in the finishing of the balls the heat may not be such as to soften them and cause an unnecessary waste of iron.

The puddle is now ready to *come out*, the wedges around the door are driven back, and the balls drawn. This occupies about four minutes. From charging the first piece of pig to the extraction of the last ball the time occupied will average, with good workmen and a fair coal, one hour and twenty minutes; but with inferior workmen and a less inflammable coal, one hour and fifty minutes is about the average. If it is performed in eighty minutes, as we have described, a puddler and his second hand will easily boil eight heats in the twelve hours, producing, with charges of 4½ cwt. each, 32 cwt. of boiled iron bars daily, or 9 tons 8 cwt. weekly, making, for the entire weekly produce of the furnace, working night and day, 18 tons 16 cwt.

On the withdrawal of the balls a quantity of cinder will remain on the bottom. A portion of this is tapped below the working door before charging a fresh heat. This cinder is produced by the oxidation of the iron and metalloids in alloy; it contains a large portion of silica, and, if not frequently renewed, will ultimately contain so large a quantity as to render it unfit for the protection of the iron. By tapping and replacing it by other cinder from the mill rolls, the puddler prevents the increase of silica, and ensures a fluid cinder rich in iron.
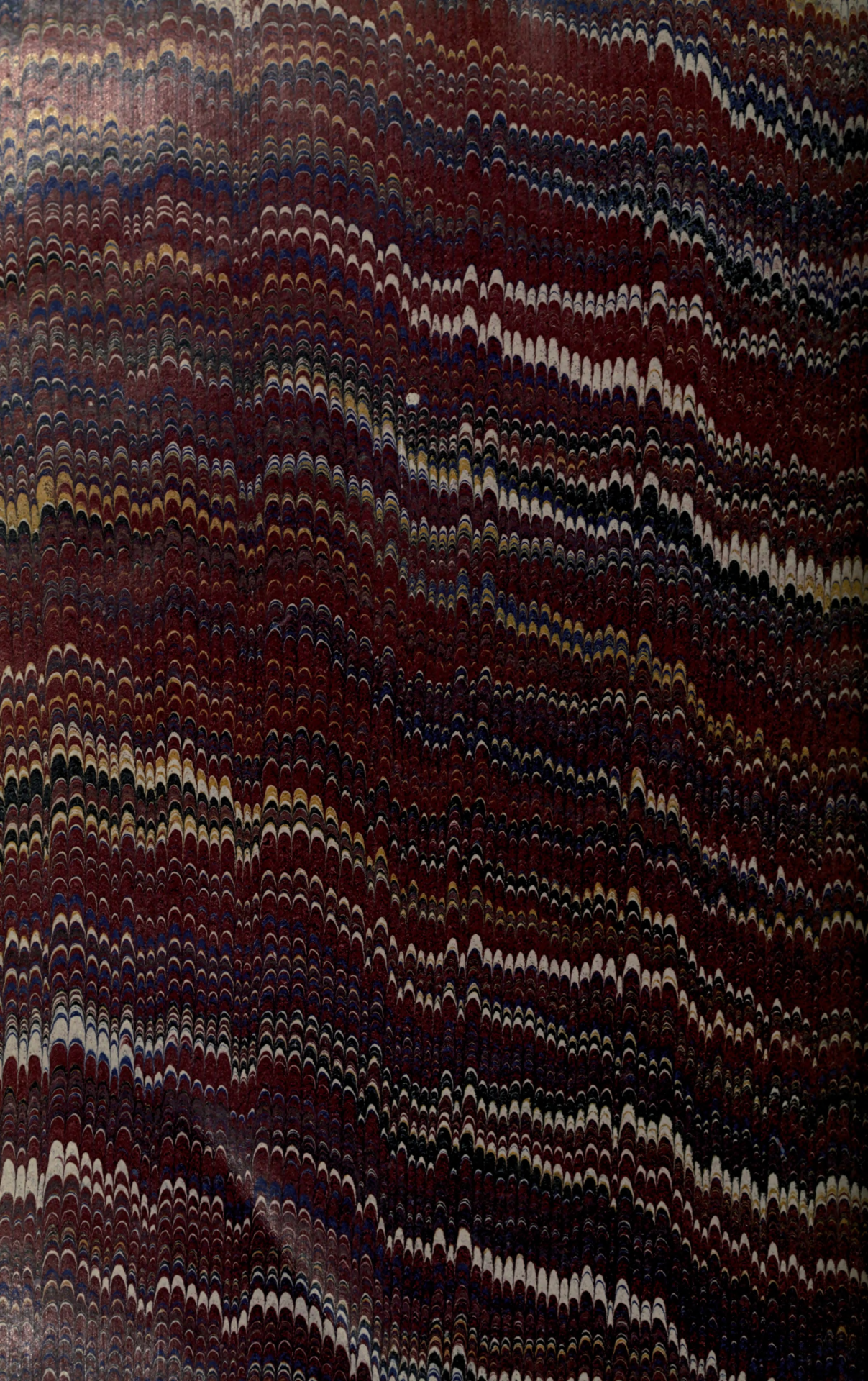
Boiling crude iron direct from the blast furnace is practised to a limited extent. By operating on fluid iron, the coal consumed in melting the cold pigs, amounting to one-third of the entire consumption, is saved, and the certainty obtained that all the iron is perfectly melted before the boiling commences, thereby ensuring the greatest uniformity in quality. Yet notwithstanding the acknowledged superiority of the boiling process in direct connection with the blast furnace and the period which has elapsed since the system was first adopted, the number of furnaces working on this plan is not large. The necessity of reconstructing the forge and bringing it inconveniently close to the blast furnace, is a great objection to its extensive use in existing works, while in the erection of new ones the contracted space permitted for carrying on the operations of the blast furnace is a disadvantage. The huddling together of the boiling furnaces, so that they may be as near as possible to the fall, operates against the success of this mode of working in close weather. A puddling forge cannot be too open in summer time. Suspension of operations through the exhaustion of the men, produced by the heat evolved by the blast and adjacent boiling furnace, is a common occurrence in these forges, and exists to a greater or less extent in some others.